AC294-02

INSTALLATION

Installation is in the reverse order of removal (See page AC-76).

AIR CONDITIONING AMPLIFIER

AC2K5-01

ON-VEHICLE INSPECTION

1. REMOVE GLOVE COMPARTMENT DOOR

2. INSPECT A/C AMPLIFIER (Engine (and ECT) ECU) CIRCUIT

Inspect the wire harness side connector of engine (and ECT) ECU from the back side, as shown in the chart below.

Engine (and ECT) ECU terminals

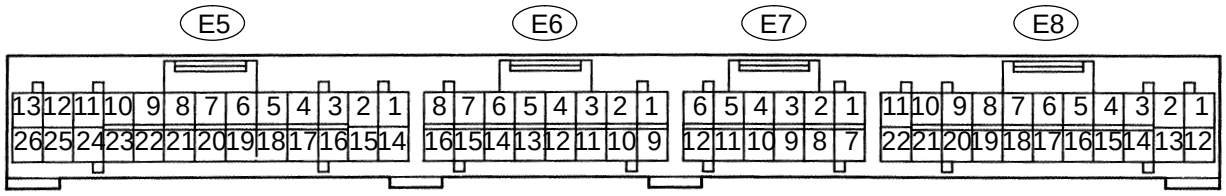

FI6526

Tester connection	Condition	Specified condition
E7-3 ↔ Ground	Start engine. Magnetic clutch: ON	Below 1.0 V
	Start engine. Magnetic clutch: OFF	Battery voltage
E5-14 ↔ E5-9	IG ON. Evaporator temp.: 0 ˚C (32 ˚F)	2.0 - 2.4 V
	IG ON. Evaporator temp.: 15 ˚C (59 ˚F)	1.4 - 1.8 V
E7-10 ↔ Ground	IG ON. A/C switch: ON	Battery voltage
	IG ON. A/C switch: OFF	No voltage
E7-7 ↔ Ground	Refrigerant pressure: 196 - 1,340 kPa	Battery voltage
E7-7 ↔ Ground	Refrigerant pressure: less than 196 or more than 1,340 kPa	No voltage

If the circuit is not as specified, inspect the circuits connected to other parts.

AC293-03

REMOVAL

1. REMOVE FRONT PASSENGER AIRBAG ASSEMBLY (See page RS-28)

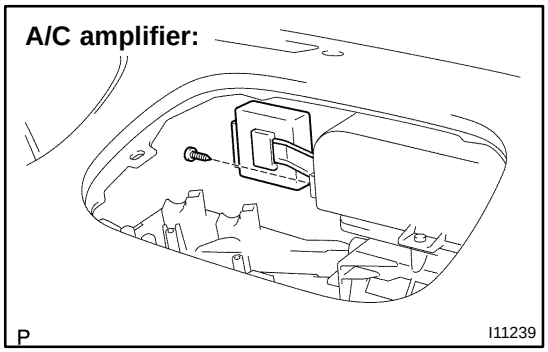

2. REMOVE A/C AMPLIFIER

(a) Disconnect the connector.

(b) Using a screwdriver, release the claw and remove the A/C amplifier.

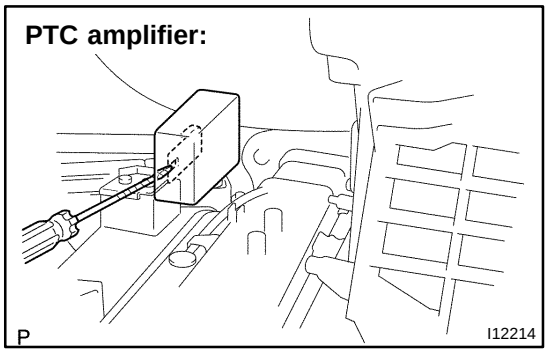

AC22G-05

CHARGING

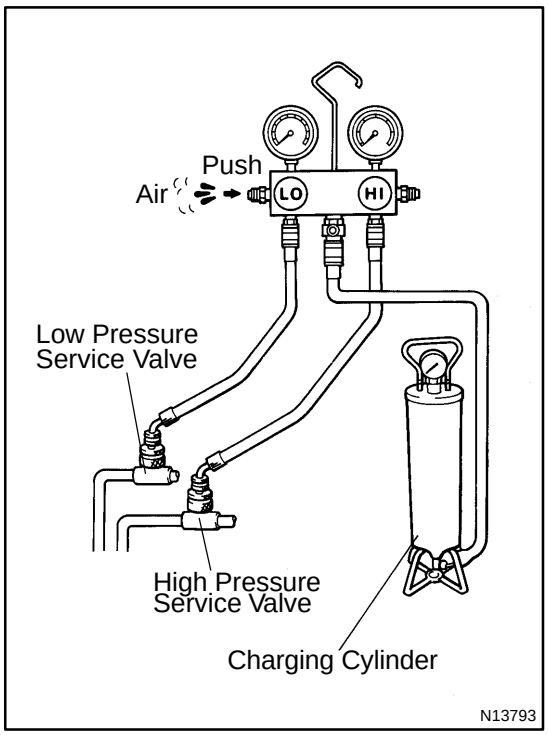

1. INSTALL CHARGING CYLINDER

HINT:

When handling the charging cylinder, always follow the directions given in the instruction manual.

(a) Charge the proper amount of refrigerant into the charging cylinder.

(b) Connect the center hose to the charging cylinder.

CAUTION:

Do not open both high and low hand valves of manifold gauge set.

(c) Open the valve of charging cylinder.

(d) Press the valve core on the side of manifold gauge and expel the air inside of the center hose.

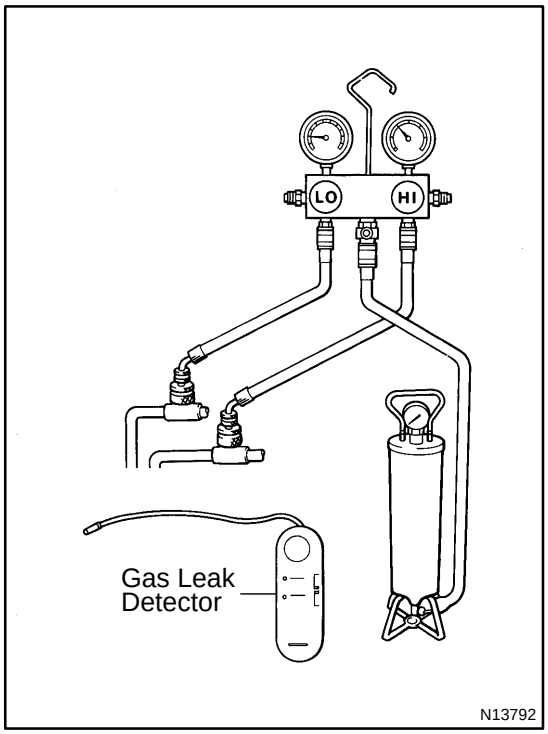

2. INSPECT REFRIGERATION SYSTEM FOR LEAKS

(a) Open the high pressure hand valve and charge refrigerant.

(b) When the low pressure gauge indicates 98 kPa (1 kgf/cm^2, 14 psi) close the high pressure hand valve.

(c) Using a gas leak detector, check the system for leakage.

CAUTION:

Use the refrigerant recovery/ recycling machine to recover the refrigerant whenever replacing parts.

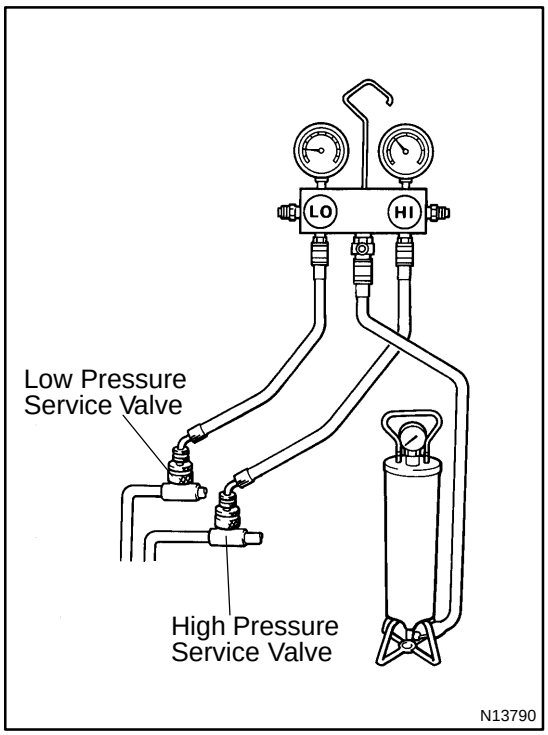

3. CHARGE REFRIGERANT INTO REFRIGERANT SYSTEM

If there is no leak after refrigerant leak check, charge the proper amount of refrigerant into refrigeration system.

CAUTION:

- **Never run the engine when charging the system through the high pressure side.**
- **Do not open the low pressure hand valve when the system is being charged with liquid refrigerant.**

(a) Open the high pressure hand valve fully.

(b) Charge specified amount of refrigerant, then close the high pressure hand valve.

HINT:

A fully charged system is indicated by the sight glass being free of any bubbles.

(c) Charge partially refrigeration system with refrigerant.

(1) Set vehicle in these condition:

- Running engine at 1,500 rpm
- Blower speed control switch: ”HI”
- Temperature control selector: ”MAX. COOL”
- Air inlet control selector: ”RECIRC”
- Fully open doors (Sliding roof: closed)

(2) Open the low pressure hand valve.

CAUTION:

Do not open the high pressure hand valve.

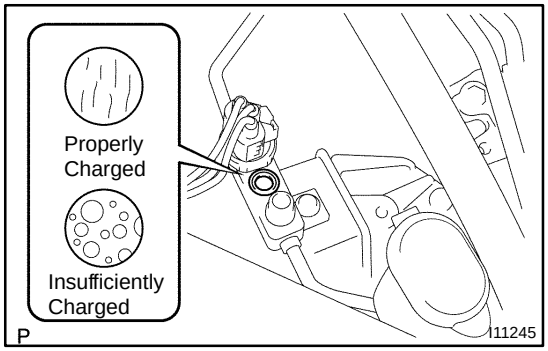

(d) Charge refrigerant until bubbles disappear and check the pressure on the gauge through the sight glass.

AC0C4-07

EVACUATING

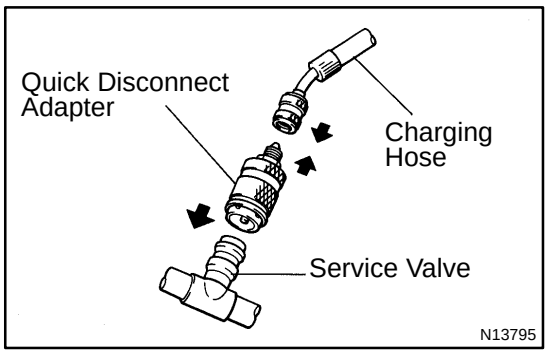

1. CONNECT QUICK DISCONNECT ADAPTER TO CHARGING HOSES

2. REMOVE CAPS FROM SERVICE VALVES ON REFRIGERANT LINES

3. SET ON MANIFOLD GAUGE SET

(a) Close both hand valves of manifold gauge set.

(b) Connect the quick disconnect adapters to the service valves.

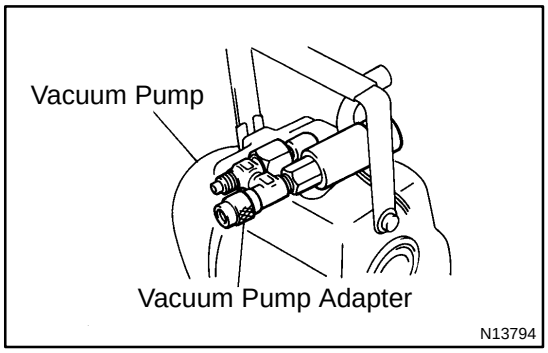

4. EVACUATE AIR FROM REFRIGERATION SYSTEM

(a) Connect the vacuum pump adapter to the vacuum pump.

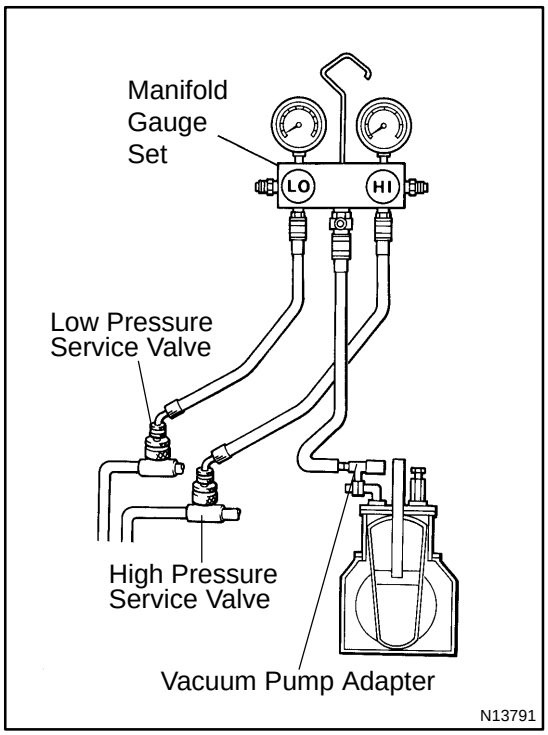

(b) Connect the center hose of the manifold gauge set to the vacuum pump adapter.

(c) Open both the high and low hand valves and run the vacuum pump.

(d) After 10 minutes or more, check that the low pressure gauge indicates 750 mmHg (30 in. Hg) or more.

HINT:

If the reading 750 mmHg (30 in. Hg) or more, close both hand valves of manifold gauge set and stop the vacuum pump.

Check the system for leaks and repair necessary.

(e) Close both the high and low hand valves and stop the vacuum pump.

(f) Leave the system in this condition for 5 minutes or more and check that there is no gauge indicator.

AC0C6-08

LOCATION

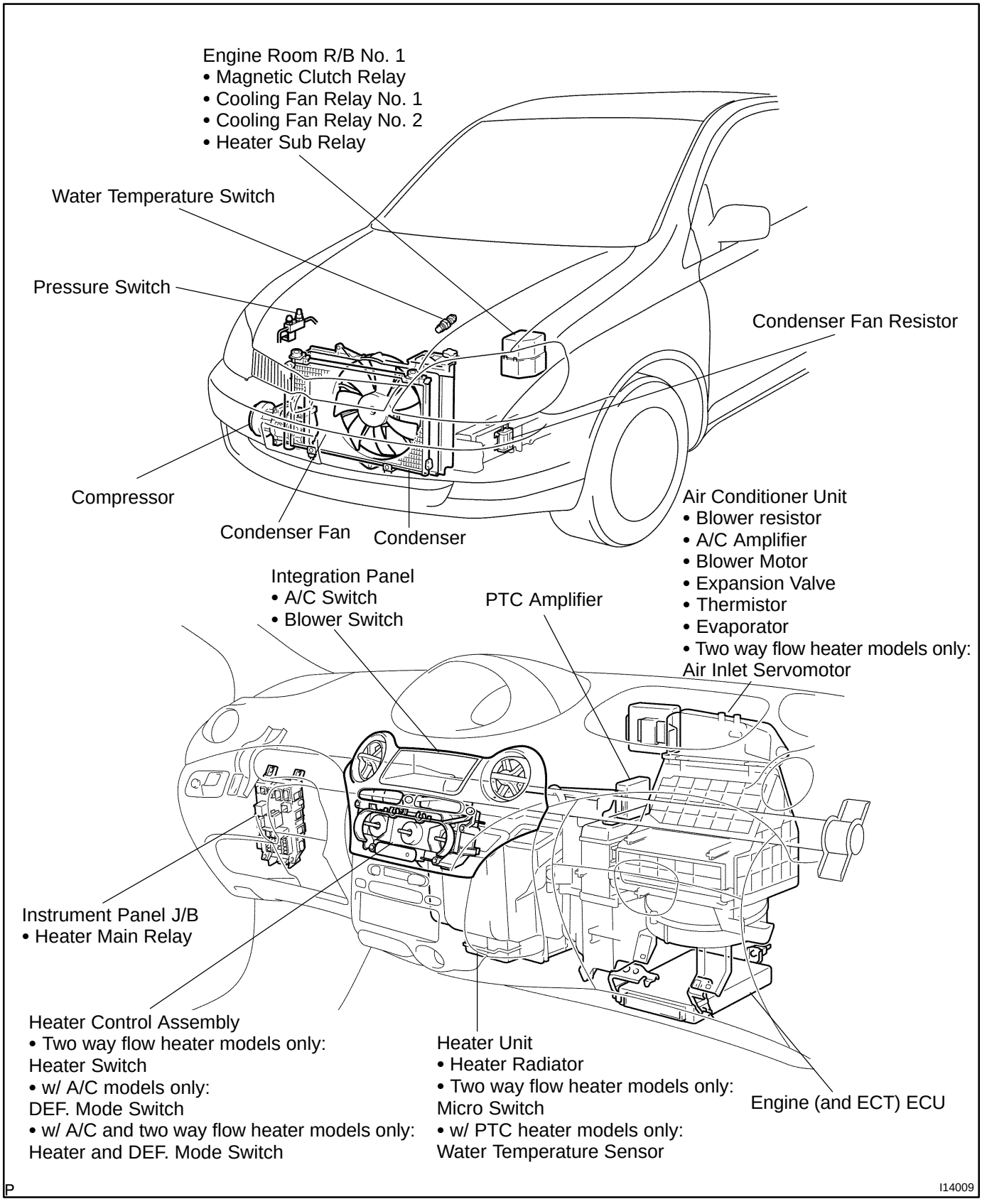

AC22F-05

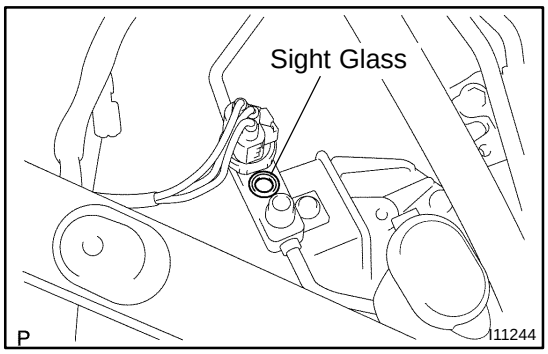

ON-VEHICLE INSPECTION

1. INSPECT REFRIGERANT VOLUME

Observe the sight glass on the liquid tube.

Test conditions:

- Running engine at 1,500 rpm
- Blower speed control switch: ”HI” position
- A/C switch ON
- Temperature control selector: ”COOL” position
- Fully open the doors

Item	Symptom	Amount of refrigerant	Remedy
1	Bubbles present in sight glass	Insufficient*	(1) Check for gas leakage with gas leak detector and repair if necessary (2) Add refrigerant until bubbles disappear
2	No bubbles present in sight glass	None, sufficient or too much	Refer item 3 and 4
3	No temperature difference between compressor inlet and outlet	Empty or nearly empty	(1) Check for gas leakage with gas leak detector and repair if necessary (2) Add refrigerant until bubbles disappear
4	Temperature between compressor inlet and outlet is noticeably different	Correct or too much	Refer to items 5 and 6
5	Immediately after air conditioning is turned off, refrigerant in sight glass stays clear	Too much	(1) Discharge refrigerant (2) Evacuate air and charge proper amount or purified refrigerant
6	When air conditioning is turned off, refrigerant foams and then stays clear	Correct	-

*: Bubbles in the sight glass with ambient temperatures higher than usual can be considered normal if cooling is sufficient.

2. INSPECT REFRIGERANT PRESSURE WITH MANIFOLD GAUGE SET

This is a method in witch the trouble is located by using a manifold gauge set. Read the manifold gauge pressure when the these conditions are established.

Test conditions:

- Temperature at the air inlet with the switch set at RECIRC is 30 - 35 ˚C (86 - 95 ˚F)
- Engine running at 1500 rpm
- Blower speed control switch at ”HI” position
- Temperature control dial at ”COOL” position

HINT:

It should be noted that the gauge indications may vary slightly due to ambient temperature conditions.

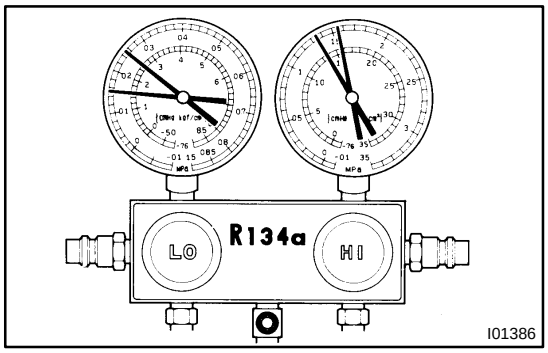

(1) Normally functioning refrigeration system.

Gauge reading:

Low pressure side:

0.15 - 0.25 MPa (1.5 - 2.5 kgf/cm^2)

High pressure side:

1.37 - 1.57 MPa (14 - 16 kgf/cm^2)

(2) Moisture present in refrigeration system.

Condition : Periodically cools and then fails to cool

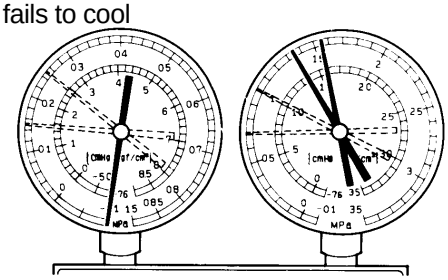

Symptom seen in refrigeration system	Probable cause	Diagnosis	Remedy
During operation, pressure on low pressure side sometimes become a vacuum and sometime normal	Moisture entered in refrigeration system freezes at expansion valve orifice and temporarily stops cycle, but normal state is restored after a time when the ice melts	• Drier in oversaturected state • Moisture in refrigeration system freezes at expansion valve orifice and blocks circulation of refrigerant	(1) Replace drier (2) Remove moisture in cycle through repeatedly evacuating air (3) Charge proper amount of new refrigerant

(3) Insufficient cooling

Condition: Insufficient cooling

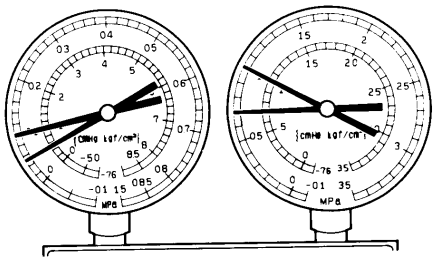

I01388

Symptom seen in refrigeration system	Probable cause	Diagnosis	Remedy
• Pressure low on both low and high pressure sides • Bubbles seen in sight glass continuously • Insufficient cooling performance	Gas leakage at some place in refrigeration system	• Insufficient refrigerant in system • Refrigerant leaking	(1) Check for gas leakage with gas leak detector and repair if necessary (2) Charge proper amount of refrigerant (3) If indicated pressure value is near 0 when connected to gauge, create the vacuum after inspecting and repairing the location of the leak

(4) Poor circulation of refrigerant

Condition: Insufficient cooling

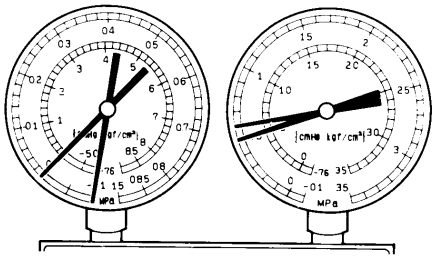

I01389

Symptom seen in refrigeration system	Probable cause	Diagnosis	Remedy
• Pressure low in both low and high pressure sides • Frost on tube from receiver to unit	Refrigerant flow obstructed by dirt in drier	Condenser clogged	Replace drier

(5) Refrigerant does not circulate

Condition: Does not cool (Cools from time to time in some cases)

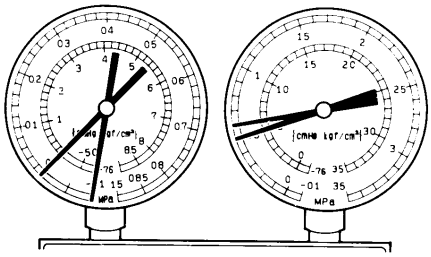

I01449

Symptom seen in refrigeration system	Probable cause	Diagnosis	Remedy
• Vacuum indicated on low pressure side, very low pressure indicated on high pressure side • Frost or dew seen on piping before and after receiver/ drier or expansion valve	• Refrigerant flow obstructed by moisture or dirt in refrigeration system • Refrigerant flow obstructed by gas leakage from expansion valve	Refrigerant does not circulate	(1) Check expansion valve (2) Clean out dirt in expansion valve by blowing with air (3) Replace drier (4) Evacuate air and charge new refrigerant to proper amount (5) For gas leakage from expansion valve, replace expansion valve

(6) Refrigerant overcharged or insufficient cooling of condenser

Condition: Insufficient cooling

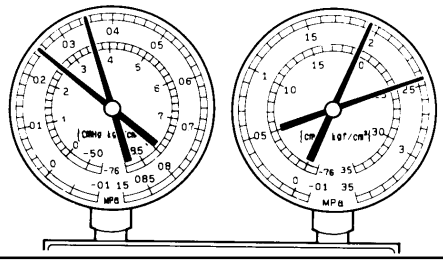

I01390

Symptom seen in refrigeration system	Probable cause	Diagnosis	Remedy
• Pressure too high on both low and high pressure sides • No sir bubbles seen through the sight glass even when the engine rpm is lowered	• Unable to develop sufficient performance due to excessive • Insufficient cooling of condenser	• Excessive refrigerant in cycle→refrigerant overcharged • Condenser cooling → condenser fins clogged or condenser fan faulty	(1) Clean condenser (2) Check cooling fan with fluid coupling operation (3) If (1) and (2) are in normal state, check amount of refrigerant Charge proper amount of refrigerant

(7) Air present in refrigeration system

Condition: Insufficient cooling

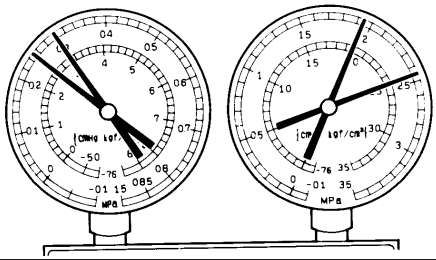

NOTE : These gauge indications are shown when the refrigeration system has been opens and the refrigerant charged without vacuum purging.

I01392

Symptom seen in refrigeration system	Probable cause	Diagnosis	Remedy
• Pressure too high on both low and high pressure sides • The low pressure piping hot to the touch • Bubbles seen in sight glass	Air entered in refrigeration system	• Air present in refrigeration system • Insufficient vacuum purging	(1) Check compressor oil to see if it is see if it is dirty or insufficient (2) Evacuate air and charge new refrigerant

(8) Expansion valve improperly

Condition: Insufficient cooling

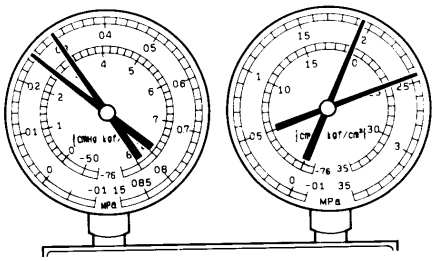

I01450

Symptom seen in refrigeration system	Probable cause	Diagnosis	Remedy
• Pressure too high on both low and high pressure sides • Frost or large amount of dew on piping on low pressure side	Trouble in expansion valve	• Excessive refrigerant in low pressure piping • Expansion valve opened too wide	Check expansion valve Replace if defective

(9) Defective compression compressor

Condition : Does not cool

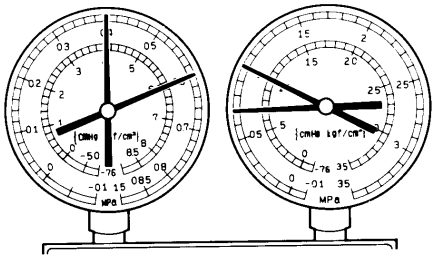

I01393

Symptom seen in refrigeration system	Probable cause	Diagnosis	Remedy
• Pressure too high on low high pressure sides • Pressure too low to on high pressure side	Internal leak in compressor	• Compression defective • Valve leaking or broken sliding parts	Repair or replace compressor

3. INSPECT IDLE-UP SPEED

(a) Warm up engine.

(b) Inspect idle-up speed when the these conditions are established.

- Warm up engine
- Blower speed control switch at ”HI” position
- A/C switch ON
- Put gear shaft in neutral
- Temperature control dial at ”COOL” position

M/T:

Magnetic clutch condition	Idle-up speed
Magnetic clutch not engaged	600 ± 50 rpm
Magnetic clutch engaged (Condenser fan speed at low)	700 ± 50 rpm
Magnetic clutch engaged (Condenser fan speed at high)	875 ± 50 rpm

If idle speed is not as specified, check idle control system.

A/T:

Magnetic clutch condition	Idle-up speed
Magnetic clutch not engaged	700 ± 50 rpm
Magnetic clutch engaged (Condenser fan speed at low)	750 ± 50 rpm
Magnetic clutch engaged (Condenser fan speed at high)	875 ± 50 rpm

If idle speed is not as specified, check idle control system.

4. INSPECT FOR LEAKAGE OF REFRIGERANT

(a) Perform in these conditions:
- Stop engine.
- Secure good ventilation (If not the gas leak detector may react to volatile gases witch are not refrigerant, such as evaporated gasoline and exhaust gas.)
- Repeat the test 2 or 3 times.
- Make sure that there is some refrigerant remaining in the refrigeration system.
  When compressor is OFF: approx. 392 - 588 kPa (4 - 6 kgf/ cm^2, 57 - 85 psi)

(b) Bring the gas leak detector close to the drain hose before performing the test.

HINT:
- After the blower motor stopped, leave the cooling unit for more than 15 minutes.
- Expose the gas leak detector sensor the under the drain hose.
- When bring the gas leak detector close to the drain hose, make sure that the gas leak detector does not react to the volatile gases.

If such reaction is unavoidable, the vehicle must be lifted up.

(c) If gas leak is not detected on the drain hose, remove the blower resistor from the cooling unit. Then insert the gas leak detector sensor into the unit and perform the test.

(d) Disconnect the connector and leave the pressure switch for approx. 20 minutes. Then bring the gas leak detector close to the pressure switch and perform the test.

(e) Bring the gas leak detector close to the refrigerant lines and perform the test.

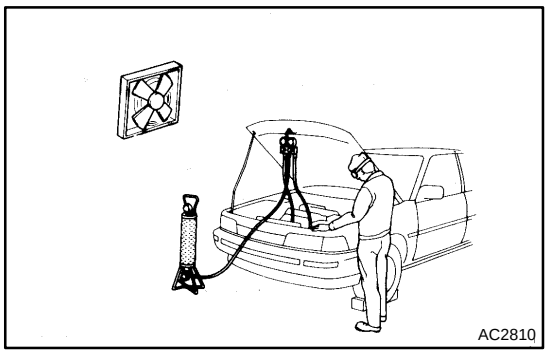
AC2810

AIR CONDITIONING SYSTEM

AC0C1-08

PRECAUTION

1. DO NOT HANDLE REFRIGERANT IN AN ENCLOSED AREA OR WEAR EYE PROTECTION

2. ALWAYS WEAR EYE PROTECTION

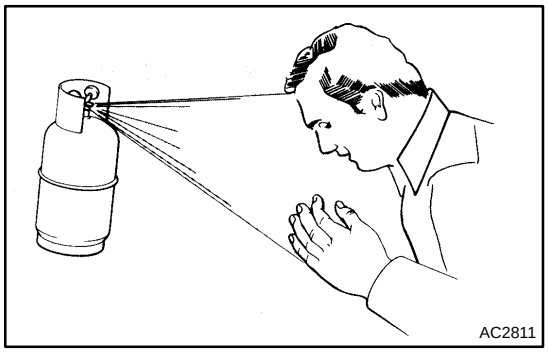
AC2811

3. BE CAREFUL NOT TO GET LIQUID REFRIGERANT IN YOUR EYES OR ON YOUR SKIN

If liquid refrigerant gets in your eyes or on your skin.

(a) Wash the area with lots of cool water.

CAUTION:

Do not rub your eyes or skin.

(b) Apply clean petroleum jelly to the skin.

(c) Go immediately to a physician or hospital for professional treatment.

4. NEVER HEAT CONTAINER OR EXPOSE IT TO NAKED FLAME

5. BE CAREFUL NOT TO DROP CONTAINER AND NOT TO APPLY PHYSICAL SHOCKS TO IT

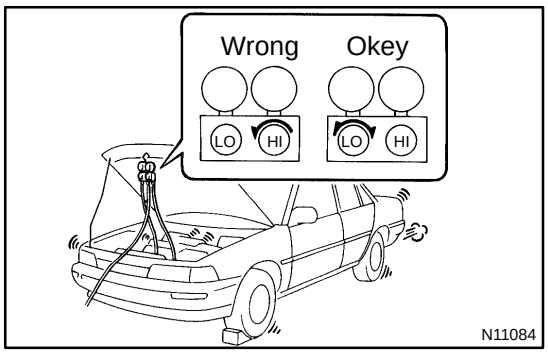

N11084

6. DO NOT OPERATE COMPRESSOR WITHOUT ENOUGH REFRIGERANT IN REFRIGERATION SYSTEM

If there is not enough refrigerant in the refrigerant system oil lubrication will be insufficient and compressor burnout may occur, so that care to avoid this, necessary care should be taken.

7. DO NOT OPEN PRESSURE MANIFOLD VALVE WHILE COMPRESSOR IS OPERATE

If the high pressure valve is opened, refrigerant flows in the reverse direction and could cause the charging cylinder to rupture, so open and close the only low pressure valve.

8. BE CAREFUL NOT TO OVERCHARGE SYSTEM WITH REFRIGERANT

If refrigerant is overcharged, it causes problems such as insufficient cooling, poor fuel economy, engine overheating etc.

9. SUPPLEMENTAL RESTRAINT SYSTEM (SRS)

The ECHO is equipped with an SRS (Supplemental Restraint System) such as the driver and front passenger airbag. Failure to carry out service operation in the correct sequence could cause the SRS to unexpectedly deploy during servicing, possibly leading to a serious accident. Before servicing (including removal or installation of parts, inspection or replacement), be sure to read the precautionary notices tn the RS section.

AC284-03

COMPONENTS

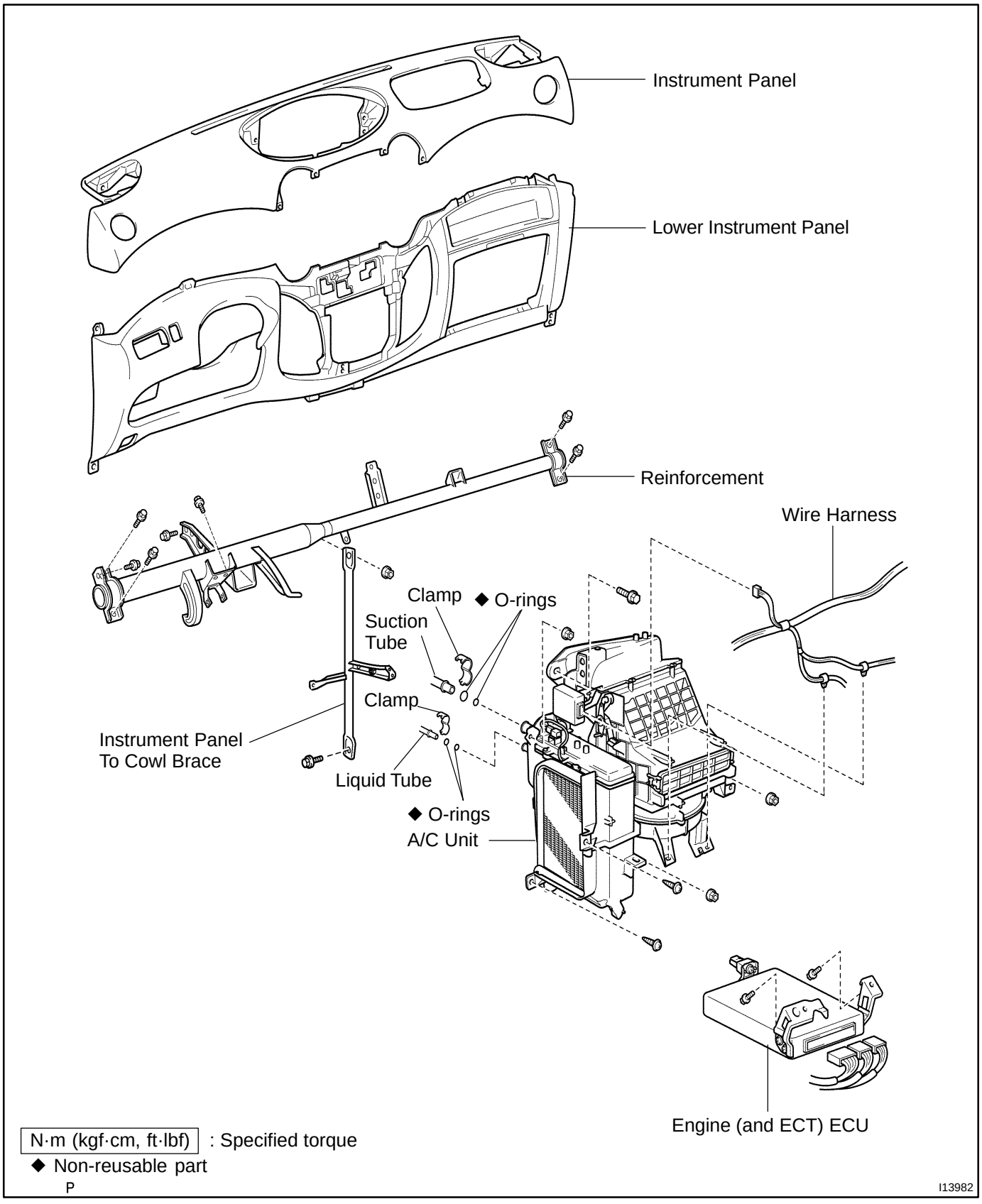

N·m (kgf·cm, ft·lbf) : Specified torque
◆ Non-reusable part
P

I13982

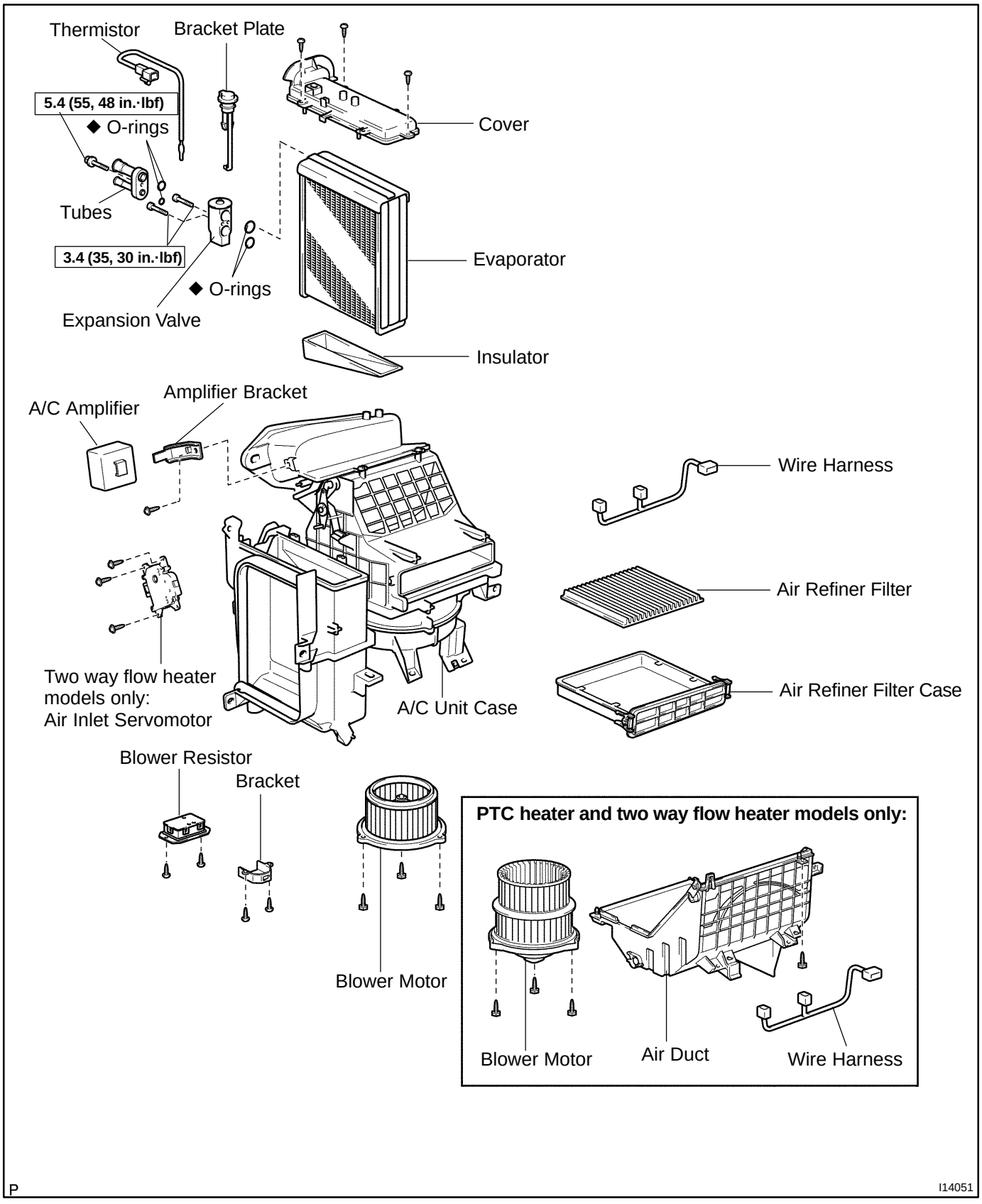
Thermistor
Bracket Plate
5.4 (55, 48 in.·lbf)
◆ O-rings
Cover
Tubes
3.4 (35, 30 in.·lbf)
Evaporator
◆ O-rings
Expansion Valve
Insulator
A/C Amplifier
Amplifier Bracket
Wire Harness
Air Refiner Filter
Air Refiner Filter Case
Two way flow heater models only:
Air Inlet Servomotor
A/C Unit Case
Blower Resistor
Bracket
Blower Motor
PTC heater and two way flow heater models only:
Blower Motor
Air Duct
Wire Harness
P
I14051

AC286-03

DISASSEMBLY

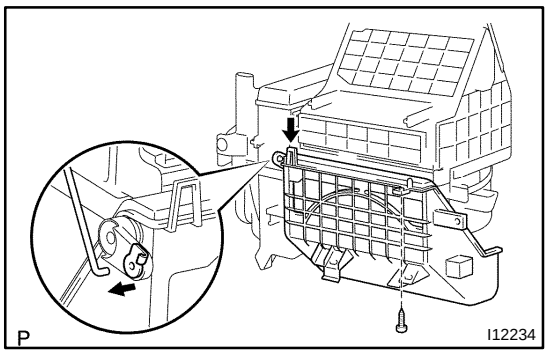

1. PTC heater and two way flow heater models only: REMOVE AIR DUCT (Motor cover)

(a) Disconnect the control link.
(b) Disconnect the connector clamps.
(c) Disconnect the wire harness clamps.
(d) Remove the 3 screws.
(e) Release the claw and remove the air duct.

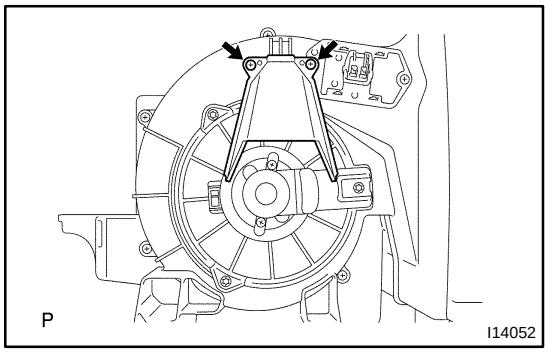

2. REMOVE BLOWER RESISTOR

(a) Standard heater models only:
Remove the 2 screws and bracket.
(b) Disconnect the connector.
(c) Remove the 2 screws and blower resistor.

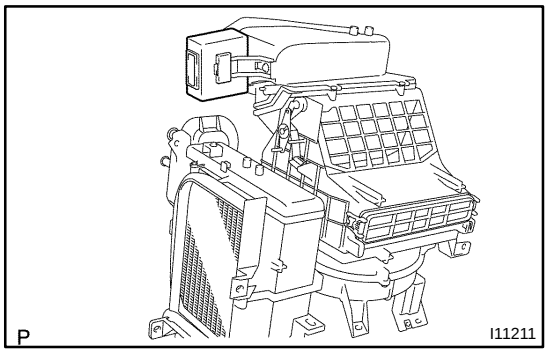

3. REMOVE A/C AMPLIFIER

Using a screwdriver, release the claw and remove the A/C amplifier.

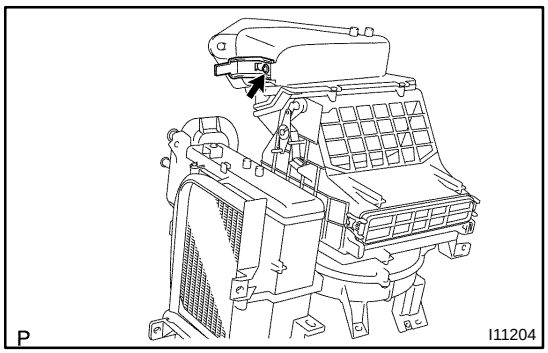

4. REMOVE AMPLIFIER BRACKET

Remove the screw and bracket.

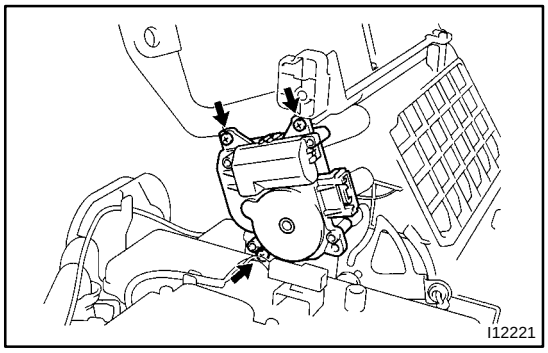

5. Two way flow heater models only: REMOVE AIR INLET SERVOMOTOR

Remove the 3 screws and air inlet servomotor.

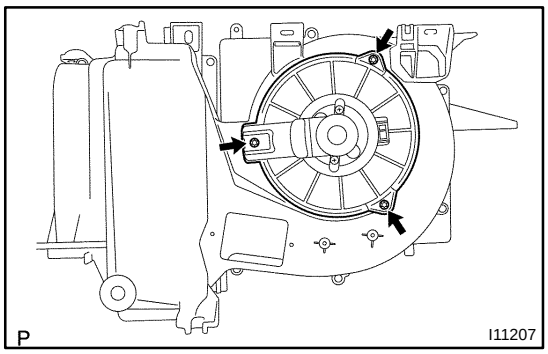

6. REMOVE BLOWER MOTOR

(a) Disconnect the connector.

(b) Remove the 3 screws and blower motor.

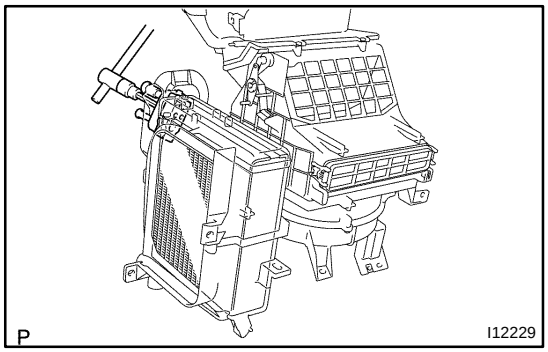

7. REMOVE EXPANSION VALVE

(a) Remove the bolt and A/C tube.

Torque: 5.4 N·m (55 kgf·cm, 48 in.·lbf)

(b) Using a hexagon wrench (5.0 mm, 0.20 in.), remove the 2 bolts and remove the tube and expansion valve.

Torque: 3.4 N·m (35 kgf·cm, 30 in.·lbf)

HINT:

At the time of reassembly, please refer to the following item.

Lubricate 4 new O-rings with compressor oil and install them to the tube.

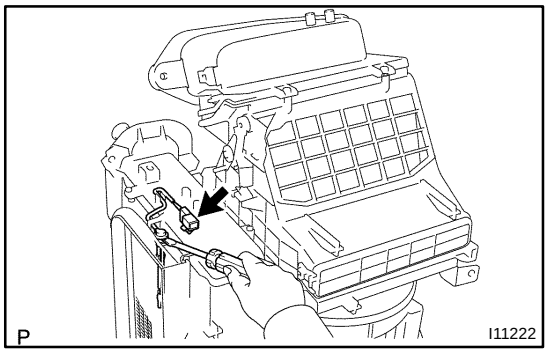

8. REMOVE THERMISTOR

(a) Disconnect the connector clamp.

(b) Using a screwdriver, remove the thermistor.

HINT:

Tape the screwdriver tip before use.

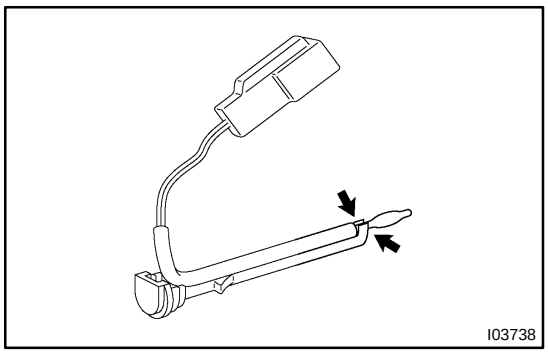

(c) Release the 2 claws and remove the sensor from bracket plate.

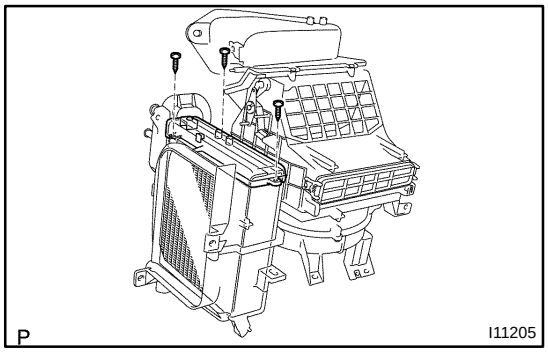

9. REMOVE EVAPORATOR

(a) Remove the 3 screws cover.

(b) Pull out the evaporator.

HINT:

At the time of reassembly, please refer to the following item.

If evaporator is replaced, add compressor oil to evaporator.

Add 40 cc (1.4 fl.oz.)

Compressor oil: ND-OIL 8 or equivalent

AC287-01

INSPECTION

1. CHECK EVAPORATOR FINS FOR BLOCKAGE

If the fins are clogged, clean them with compressed air.

NOTICE:

Never use to clean the evaporator.

2. CHECK FITTING FOR CRACKS FOR SCRATCHES

AC289-02

INSTALLATION

Installation is in the reverse order of removal (See page AC-27).

AIR CONDITIONER UNIT

AC283-01

ON-VEHICLE INSPECTION

INSPECT FOR LEAKAGE OF REFRIGERANT

(a) Remove the glove compartment door (See page BO-76).
(b) Remove the blower resister.
(c) Using a gas leak detector, check for leakage of refrigerant.

If there is leakage, check the tightening torque at the joints or check the evaporator.

AC288-02

REASSEMBLY

Reassembly is in the reverse order of disassembly (See page AC-29).

AC2K8-01

REMOVAL

1. DISCHARGE REFRIGERANT FROM REFRIGERATION SYSTEM

HINT:

At the time of installation, please refer to the following item.

Evacuate air from refrigeration system.

Charge system with refrigerant and inspect for leakage of refrigerant.

Specified amount: 460 ± 30 g (16.23 ± 1.06 oz.)

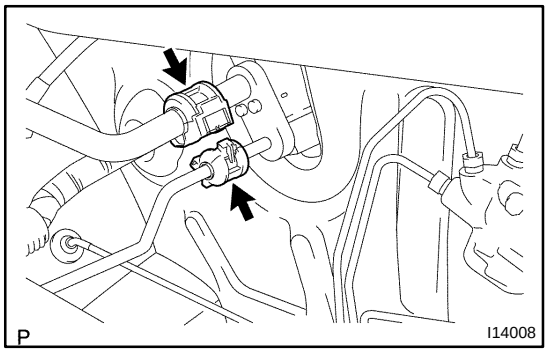

2. DISCONNECT LIQUID TUBE

(a) Remove the grommet.

(b) Using SST, remove the 2 piping clamps.

SST 09870-00025 (Liquid tube)
09870-00015 (Suction tube)

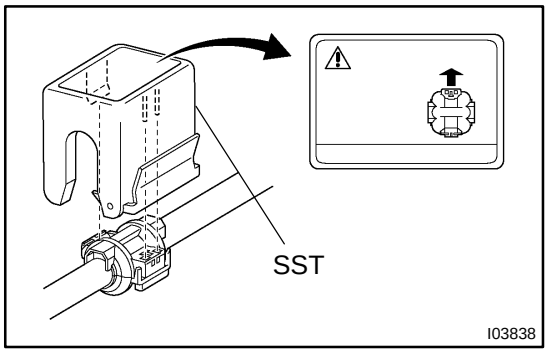

(1) Insert SST to piping clamp.

HINT:

Confirm the direction of the piping clamp claw and SST using the illustration showing on the caution label.

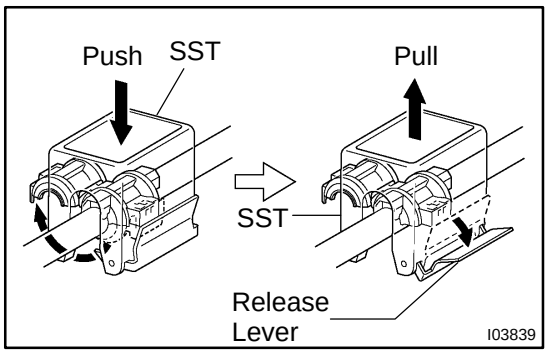

(2) Push down SST and release the clamp lock.

NOTICE:

Be careful not to deform the tubes, when pushing SST.

(3) Pull SST slightly and push the release lever, then remove the piping clamp with SST.

(4) Remove the piping clamp from SST.

(c) Disconnect the both tubes.

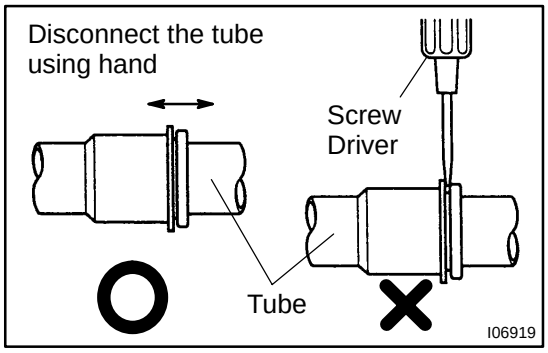

NOTICE:

- **Do not use tools like screwdriver to remove the tube.**
- **Cap the open fittings immediately to keep moisture or dirt out of the system.**

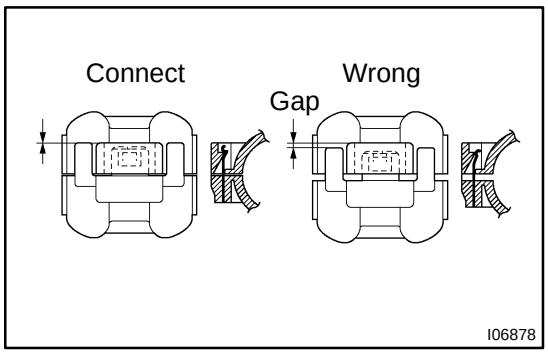

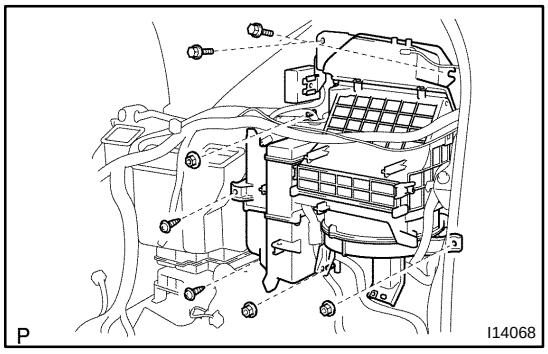

HINT:

At the time of installation, please refer to the following item.

- Lubricate 2 new O-rings with compressor oil and install them to the tubes.
- After connection, check the fitting for claw of the piping clamp.

3. REMOVE INSTRUMENT PANEL AND REINFORCEMENT (See page BO-76)

4. REMOVE ENGINE (and ECT) ECU

Remove the 2 bolts and engine (and ECT) ECU.

5. REMOVE A/C UNIT

(a) Disconnect the connectors.

(b) Disconnect the wire harness clamps.

(c) Remove the 2 bolts, 3 rivets and 2 screws and A/C unit.

HINT:

At the time of installation, please refer to the following item.

Do not reuse the rivet.

AIR INLET SERVOMOTOR

AC28P-03

INSPECTION

1. REMOVE FRONT PASSENGER AIRBAG
(See page RS-28)

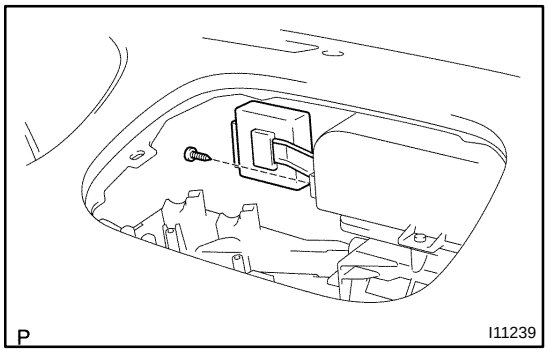

2. REMOVE A/C AMPLIFIER WITH BRACKET

(a) Disconnect the connector.

(b) Remove the screw and A/C amplifier with bracket.

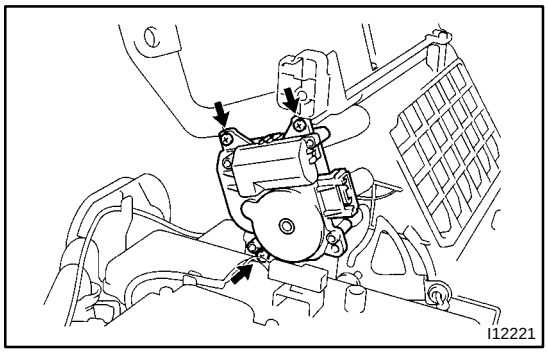

3. REMOVE AIR INLET SERVOMOTOR

(a) Disconnect the connector.

(b) Remove the 3 screws and servomotor.

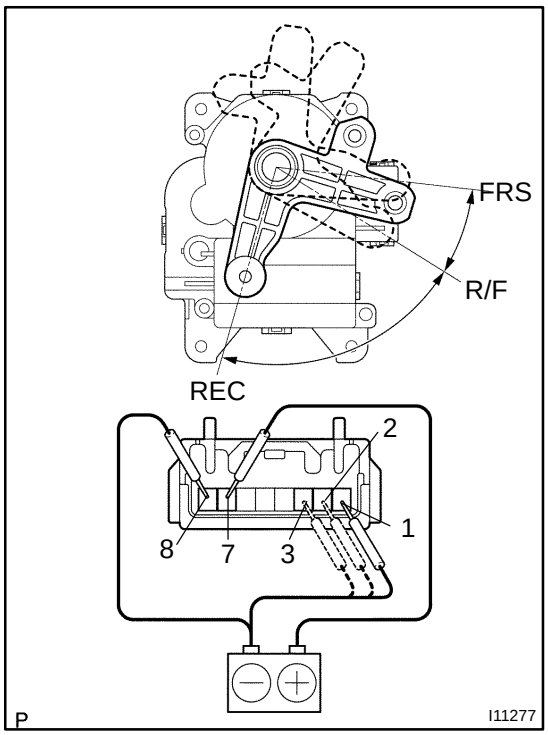

4. INSPECT AIR INLET SERVOMOTOR OPERATION

(a) Connect the positive (+) lead from the battery to terminal 7 and the negative (-) lead to terminal 8.

(b) Connect the negative (-) lead from the battery to each terminal and check that the shaft rotates at each position, as shown in the chart.

Connected terminal	Position
REC	1
R/F	2
FRS	3

If operation is not as specified, replace the servomotor.

5. INSTALL AIR INLET SERVOMOTOR

6. INSTALL A/C AMPLIFIER WITH BRACKET

7. INSTALL FRONT PASSENGER AIRBAG
(See page RS-37)

AIR REFINER FILTER

AC29H-03

REPLACEMENT

1. REMOVE GLOVE COMPARTMENT DOOR

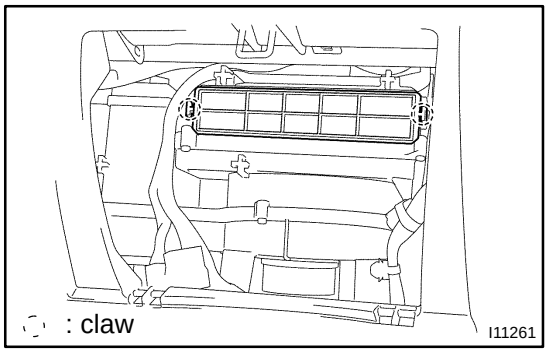

2. REPLACE AIR REFINER FILTER

(a) Release the 2 claws and pull out the filter case.

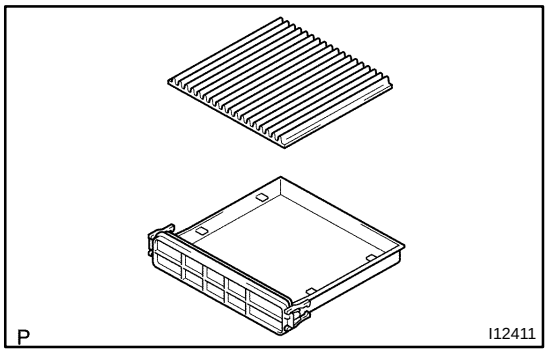

(b) Remove the filter.
(c) Install the new filter.
(d) Install the filter case to A/C unit.

3. INSTALL GLOVE COMPARTMENT DOOR

BLOWER MOTOR

AC2K2-01

INSPECTION

1. REMOVE GLOVE COMPARTMENT DOOR
(See page BO-76)

2. REMOVE ENGINE (and ECT) ECU

(a) Disconnect the connectors.
(b) Remove the 2 bolts and engine (and ECT) ECU.

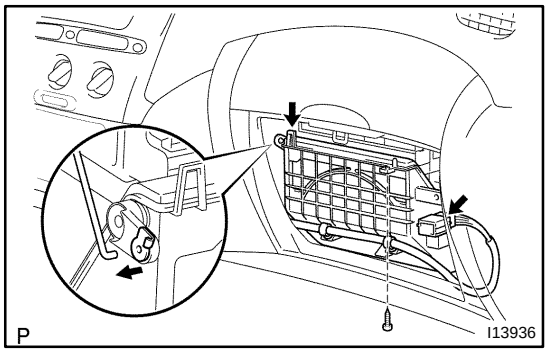

3. Two way flow heater models only: REMOVE AIR DUCT (Motor cover)

(a) Disconnect the control link.
(b) Disconnect the connectors.
(c) Disconnect the connector clamps.
(d) Disconnect the wire harness clamps.
(e) Remove the screw.
(f) Release the claw and remove the air duct.

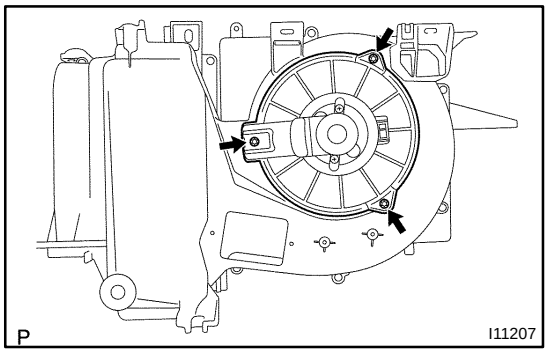

4. REMOVE BLOWER MOTOR

(a) Disconnect the connector.
(b) Remove the 3 screws and blower motor.

Standard heater:

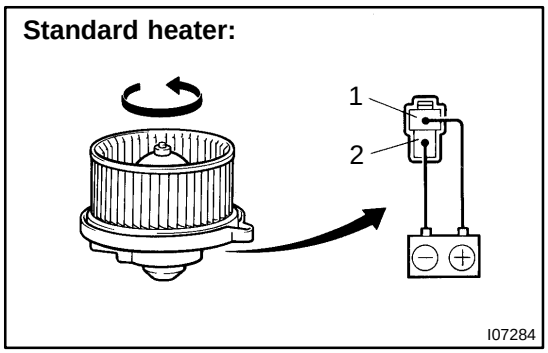

5. INSPECT BLOWER MOTOR OPERATION

Connect the positive (+) lead from the battery to terminal 1 and the negative (-) lead to terminal 2, then check that the motor operations smoothly.

If operation is not as specified, replace the blower motor.

Two ways flow heater:

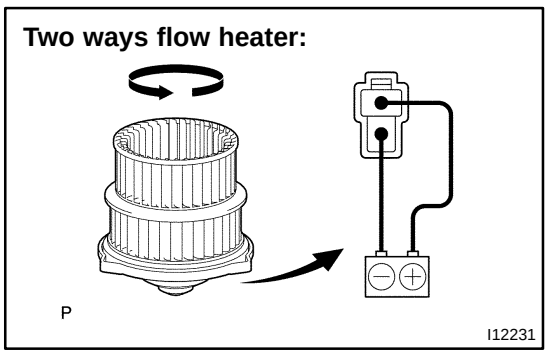

6. INSTALL BLOWER MOTOR
7. Two way flow heater models only:
   INSTALL AIR DUCT (Motor cover)
8. INSTALL ENGINE (and ECT) ECU
9. INSTALL GLOVE COMPARTMENT DOOR
   (See page BO-84)

BLOWER RESISTOR

AC2K3-01

INSPECTION

1. **REMOVE GROVE COMPARTMENT DOOR**
   (See page BO-76)
2. **REMOVE ENGINE (and ECT) ECU**

(a) Disconnect the wire harness clamps.
(b) Disconnect the connectors.
(c) Remove the 2 bolts and engine (and ECT) ECU.

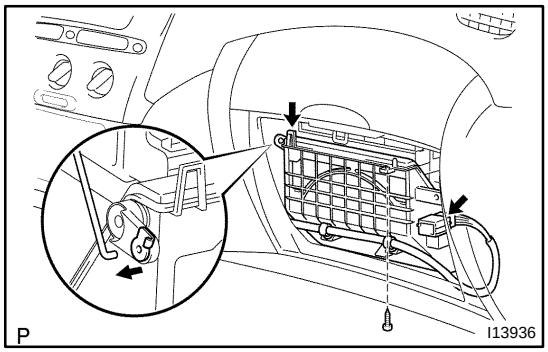

3. **Two way flow heater models only:**
   REMOVE AIR DUCT (Motor cover)

(a) Disconnect the control link.
(b) Disconnect the connector clamps.
(c) Remove the screw.
(d) Release the claw and remove the air duct.

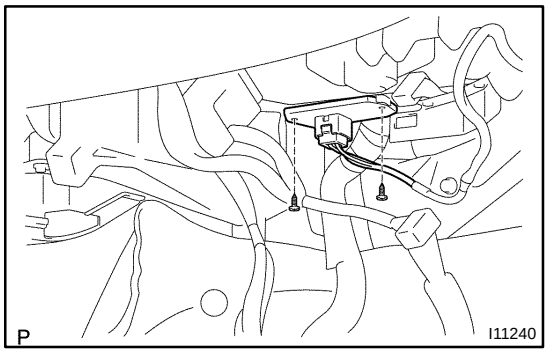

4. **REMOVE BLOWER RESISTOR**

(a) Disconnect the connector.
(b) Remove the 2 screws and blower resistor.

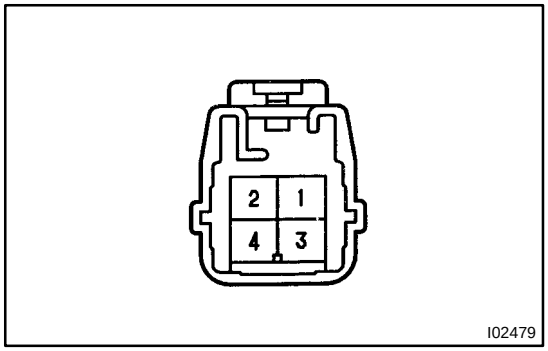

5. **INSPECT BLOWER RESISTOR RESISTANCE**

Tester connection	Condition	Specified condition
1 - 3	Constant	Approx. 0.4 Ω
1 - 2	Constant	Approx. 1.5 Ω
1 - 4	Constant	Approx. 2.8 Ω

If resistance is not as specified, replace the blower resistor.

6. **INSTALL BLOWER RESISTOR**
7. **Two way flow heater models only:**
   INSTALL AIR DUCT
8. **INSTALL ENGINE (and ECT) ECU**
9. **INSTALL GLOVE COMPARTMENT DOOR**
   (See page BO-84)

AC28E-03

COMPONENTS

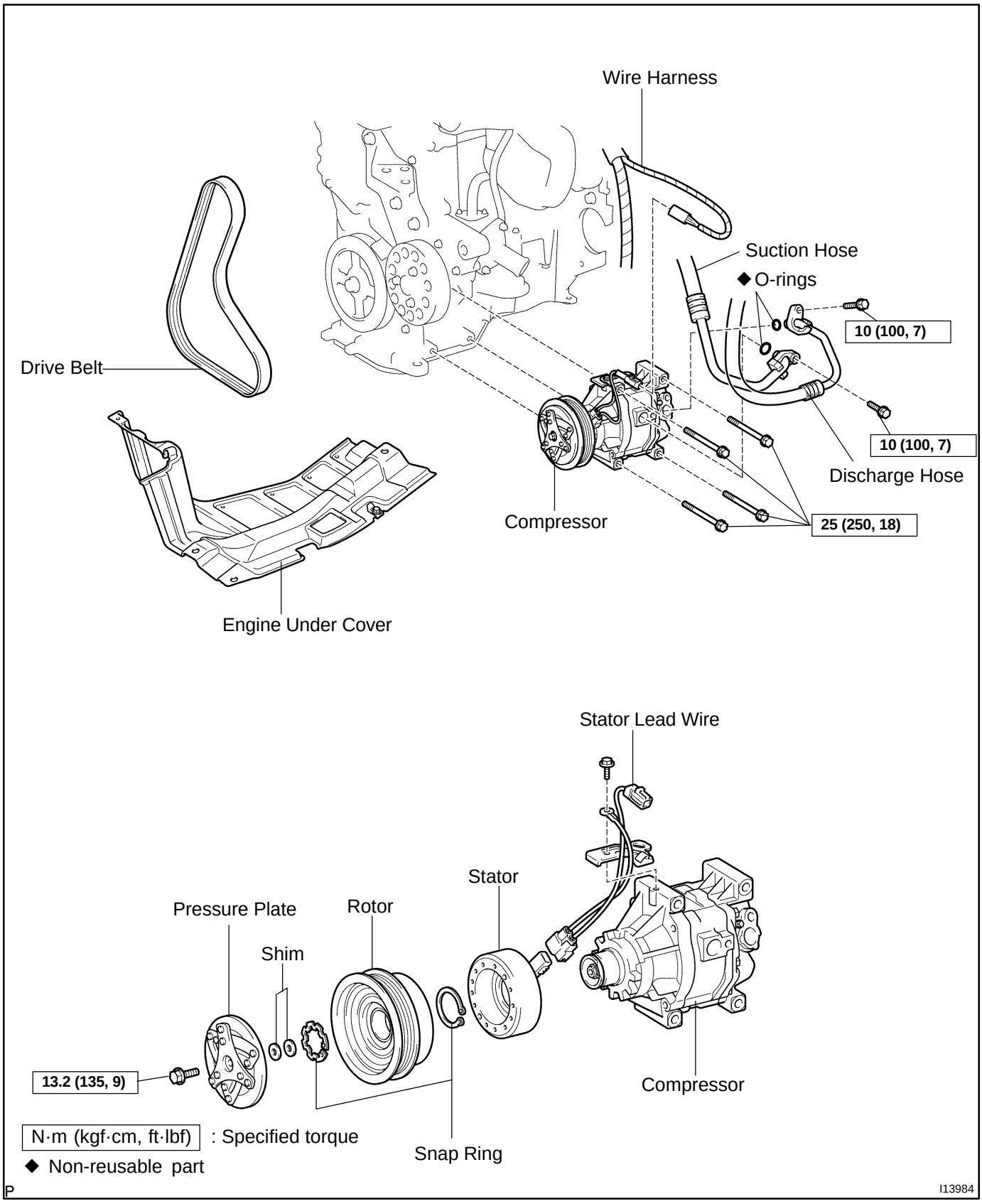

AC28G-04

DISASSEMBLY

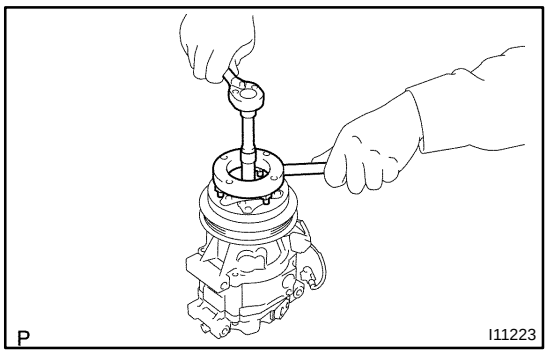

1. REMOVE PRESSURE PLATE

(a) Using SST and a socket wrench, remove the shaft bolt.
SST 07112-76050
Torque: 13.2 N·m (135 kgf·cm, 9 ft·lbf)

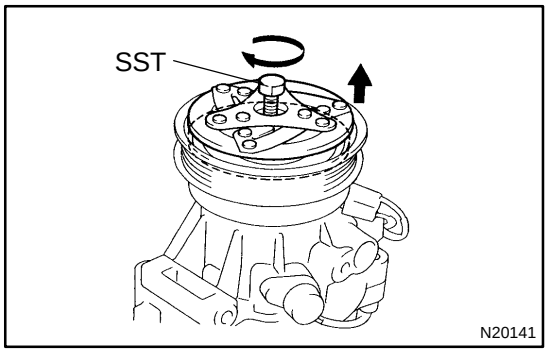

(b) Install SST to the pressure plate.
SST 07112-66040

(c) Using SST and a socket wrench, remove the pressure plate.
SST 07112-76050, 07112-66040

(d) Remove the shims from the shaft.

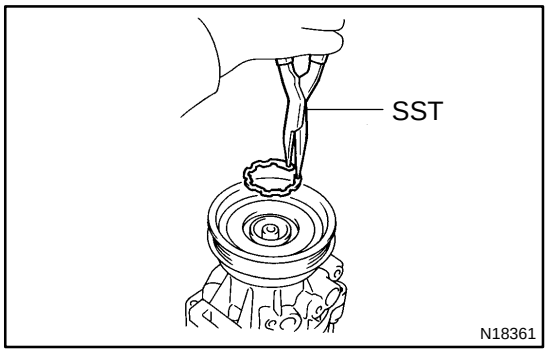

2. REMOVE ROTOR

(a) Using SST, remove the snap ring.
SST 95994-10020

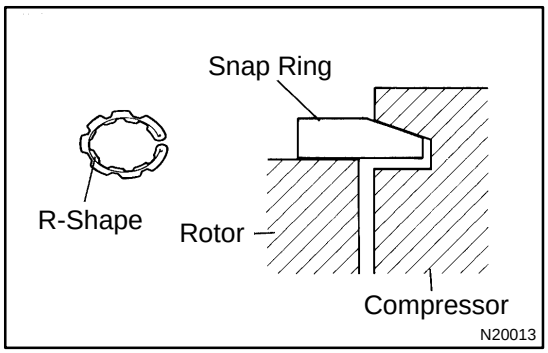

NOTICE:
At the time of reassembly, please refer to the following item.
The snap ring should be installed so that its beveled side faces up.

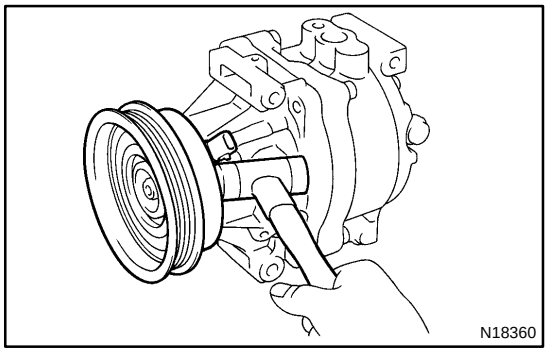

(b) Using a plastic hammer, tap the rotor off the shaft.

NOTICE:
Be careful not to damage the pulley when tapping on the rotor.

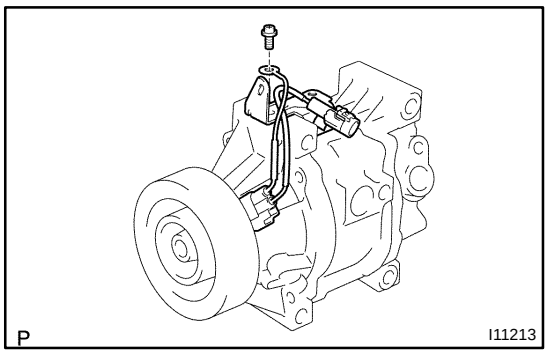

3. REMOVE STATOR

(a) Disconnect the connector from the stator.

(b) Remove the screw and stator lead wire.

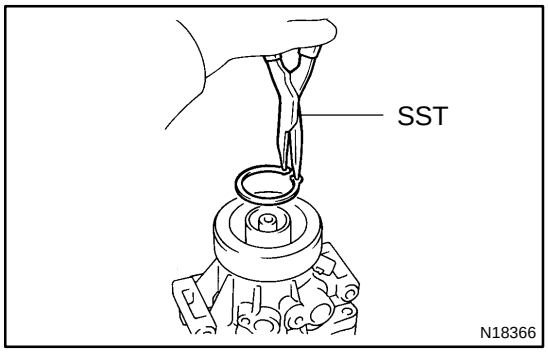

(c) Using SST, remove the snap ring.
SST 95994-10020

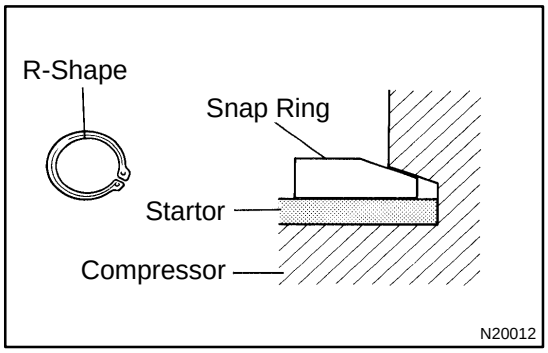

NOTICE:
At the time of reassembly, please refer to the following item.
The snap ring should be installed so that its beveled side faces up.

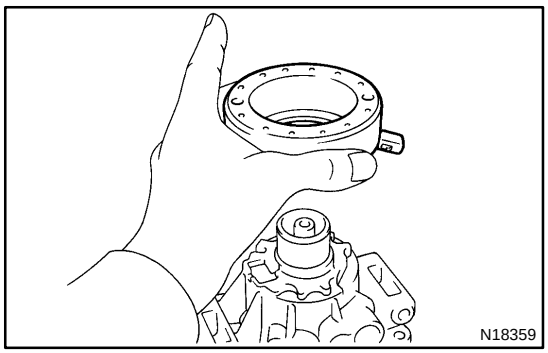

(d) Remove the stator.

AC2JZ-01

INSTALLATION

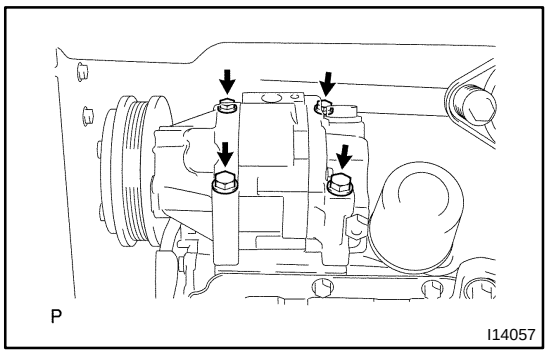

1. INSTALL COMPRESSOR

(a) Install the compressor with 4 bolts.
Torque: 25 N·m (250 kgf·cm, 18 ft·lbf)

(b) Connect the connector.

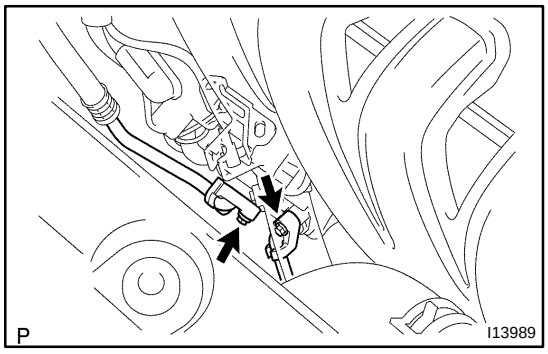

2. CONNECT DISCHARGE AND SUCTION HOSES FROM COMPRESSOR

(a) Lubricate 2 new O-rings with compressor oil and install them to the both hoses.

(b) Connect the both hoses and install the 2 bolts.
Torque: 10 N·m (100 kgf·cm, 7 ft·lbf)

NOTICE:
Hoses should be connected immediately after the caps have been removed.

3. CONNECT DRIVE BELT (See page AC-18)

4. INSTALL ENGINE UNDER COVER

5. CHARGE SYSTEM WITH REFRIGERANT

(a) Evacuate air from refrigeration system.

(b) Charge system with refrigerant and inspect for leakage of refrigerant.
Specified amount: 460 ± 30 g (16.23 ± 1.06 oz.)

6. INSPECT FOR LEAKAGE OF REFRIGERANT

Using a gas leak detector, check for leakage of refrigerant.
If there is leakage, check the tightening torque at the joints.

7. INSPECT A/C OPERATION

COMPRESSOR AND MAGNETIC CLUTCH

AC0CZ-05

ON-VEHICLE INSPECTION

1. CHECK FOR LEAKAGE OF GREASE FROM CLUTCH BEARING

2. CHECK FOR SIGNS OF OIL ON PRESSURE PLATE OR ROTOR

3. INSPECT MAGNETIC CLUTCH BEARING FOR NOISE

(a) Start engine.

(b) Check for abnormal noise from the compressor when the A/C switch is OFF.

If abnormal noise is being emitted, replace the magnetic clutch.

4. INSPECT MAGNETIC CLUTCH OPERATION

(a) Disconnect the connector.

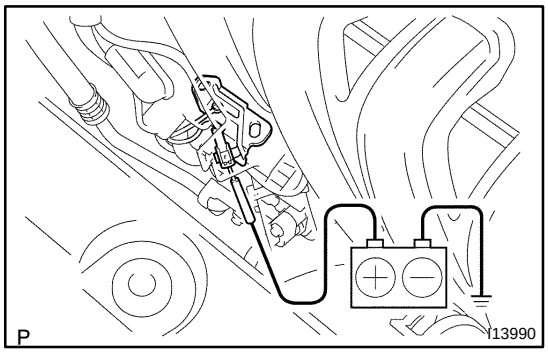

(b) Connect the positive (+) lead from the battery to terminal of magnetic clutch connector and the negative (-) lead to the body ground.

(c) Check that the magnetic clutch energized.

If operation is not as specified, replace the magnetic clutch.

5. INSPECT COMPRESSOR FOR METALLIC SOUND

Check there is abnormal metallic sound from the compressor when the A/C switch is ON.

If abnormal metallic sound is heard, replace the compressor assembly.

6. INSPECT REFRIGERANT PRESSURE

(See page AC-3)

7. INSPECT VISUALLY FOR LEAKAGE OF REFRIGERANT

Using a gas leak detector, check for leakage of refrigerant.

If there is any leakage, check the tightening torque at joints or replace compressor.

AC0D3-06

REASSEMBLY

Reassembly is in the reverse order of disassembly (See page AC-45).

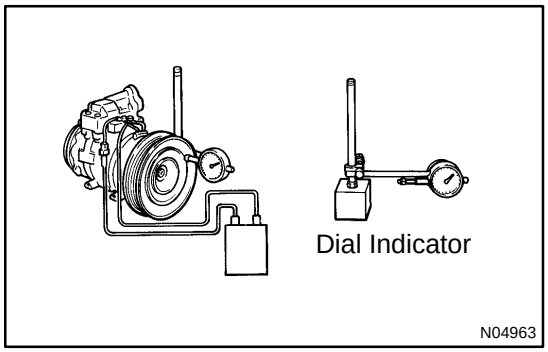

CHECK CLEARANCE OF MAGNETIC CLUTCH

HINT:

After reassembly, check the magnetic clutch clearance.

(a) Set the dial indicator to the pressure plate of the magnetic clutch.

(b) Connect the magnetic clutch lead wire to the positive (+) terminal of the battery.

(c) Check the clearance between the pressure plate and rotor when connecting the negative (-) terminal to the battery.

Standard clearance:

0.5 ± 0.15 mm (0.020 ± 0.0059 in.)

If the clearance is not within the standard clearance, adjust the clearance using shims to obtain the standard clearance.

Shim thickness:

0.1 mm (0.004 in.)

0.3 mm (0.012 in.)

0.5 mm (0.020 in.)

AC2JY-01

REMOVAL

1. **RUN ENGINE AT IDLE SPEED WITH A/C ON FOR APPROX. 10 MINUTES**
2. **STOP ENGINE**
3. **DISCONNECT NEGATIVE (-) TERMINAL CABLE FROM BATTERY**
4. **DISCHARGE REFRIGERANT FROM REFRIGERATION SYSTEM**
5. **REMOVE ENGINE UNDER COVER**
6. **DISCONNECT DRIVE BELT (See page AC-17)**

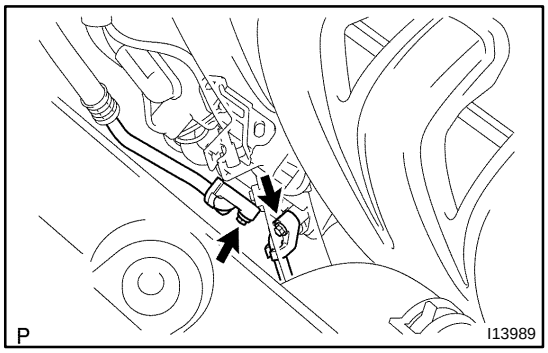

7. **DISCONNECT DISCHARGE AND SUCTION HOSES FROM COMPRESSOR**

Remove the 2 bolts and disconnect the both hoses.

NOTICE:

Cap the open fittings immediately to keep moisture or dirt out of the system.

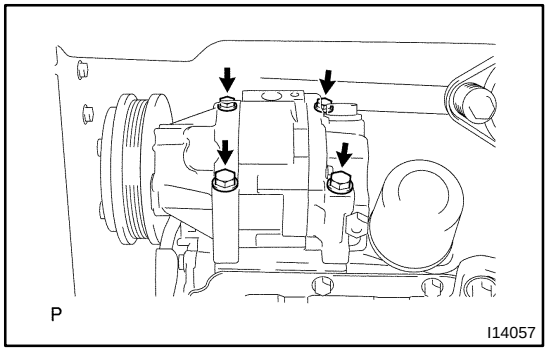

8. **REMOVE COMPRESSOR**

(a) Disconnect the connector.
(b) Disconnect the wire harness clamp.
(c) Remove the 4 bolts and compressor.

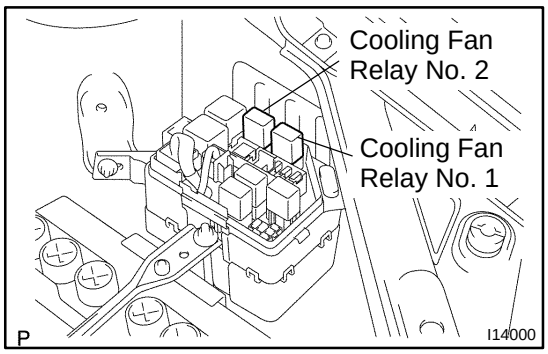

COOLING FAN RELAY

AC28U-03

INSPECTION

1. REMOVE COOLING FAN RELAYS NO. 1 AND NO. 2 FROM ENGINE ROOM RELAY BLOCK

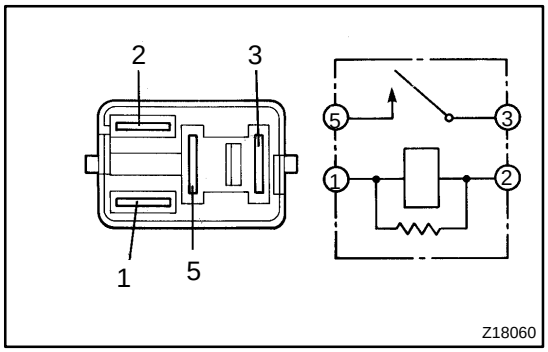

2. INSPECT NO. 1 COOLING FAN RELAY (Marking: FAN1) CONTINUITY

Condition	Tester connection	Specified condition
Constant	1 - 2	Continuity
Apply B+ between terminals 1 and 2	3 - 5	Continuity

If continuity is not as specified, replace the relay.

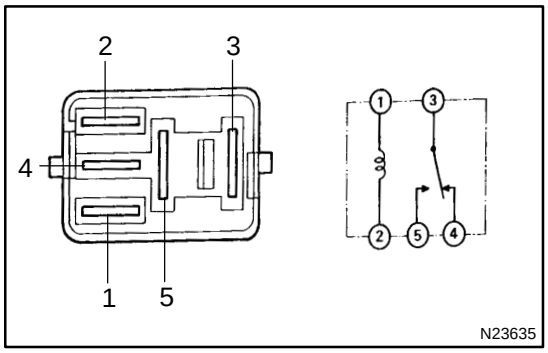

3. INSPECT NO. 2 COOLING FAN RELAY (Marking: FAN2) CONTINUITY

Condition	Tester connection	Specified condition
Constant	1 - 2 3 - 4	Continuity
Apply B+ between terminals 1 and 2	3 - 5	Continuity

If continuity is not as specified, replace the relay.

4. INSTALL COOLING FAN RELAYS NO. 1 AND NO. 2 FROM ENGINE ROOM RELAY BLOCK

CONDENSER FAN RESISTOR

AC291-03

INSPECTION

1. REMOVE ENGINE UNDER COVER LH

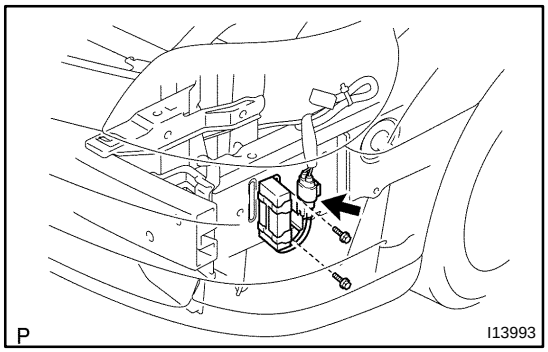

2. REMOVE CONDENSER FAN RESISTOR

(a) Disconnect the connector.

(b) Remove the 2 bolts and condenser fan resistor.

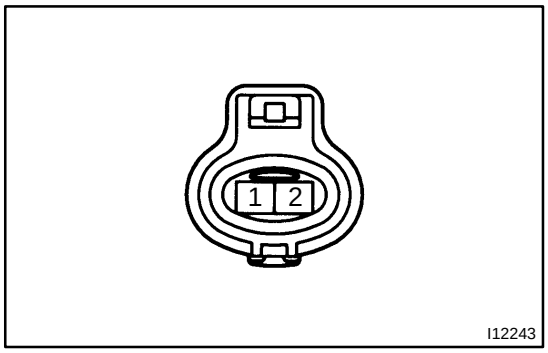

3. INSPECT CONDENSER FAN RESISTOR RESISTANCE

Measure resistance between terminals.

Standard resistance: 1.3 ± 0.13 Ω

If resistance is not as specified, replace the condenser fan resistor.

4. INSTALL CONDENSER FAN RESISTOR

(a) Install the condenser fan resistor with 2 bolts.

(b) Connect the connector.

5. INSTALL ENGINE UNDER COVER LH

AC28I-04

COMPONENTS

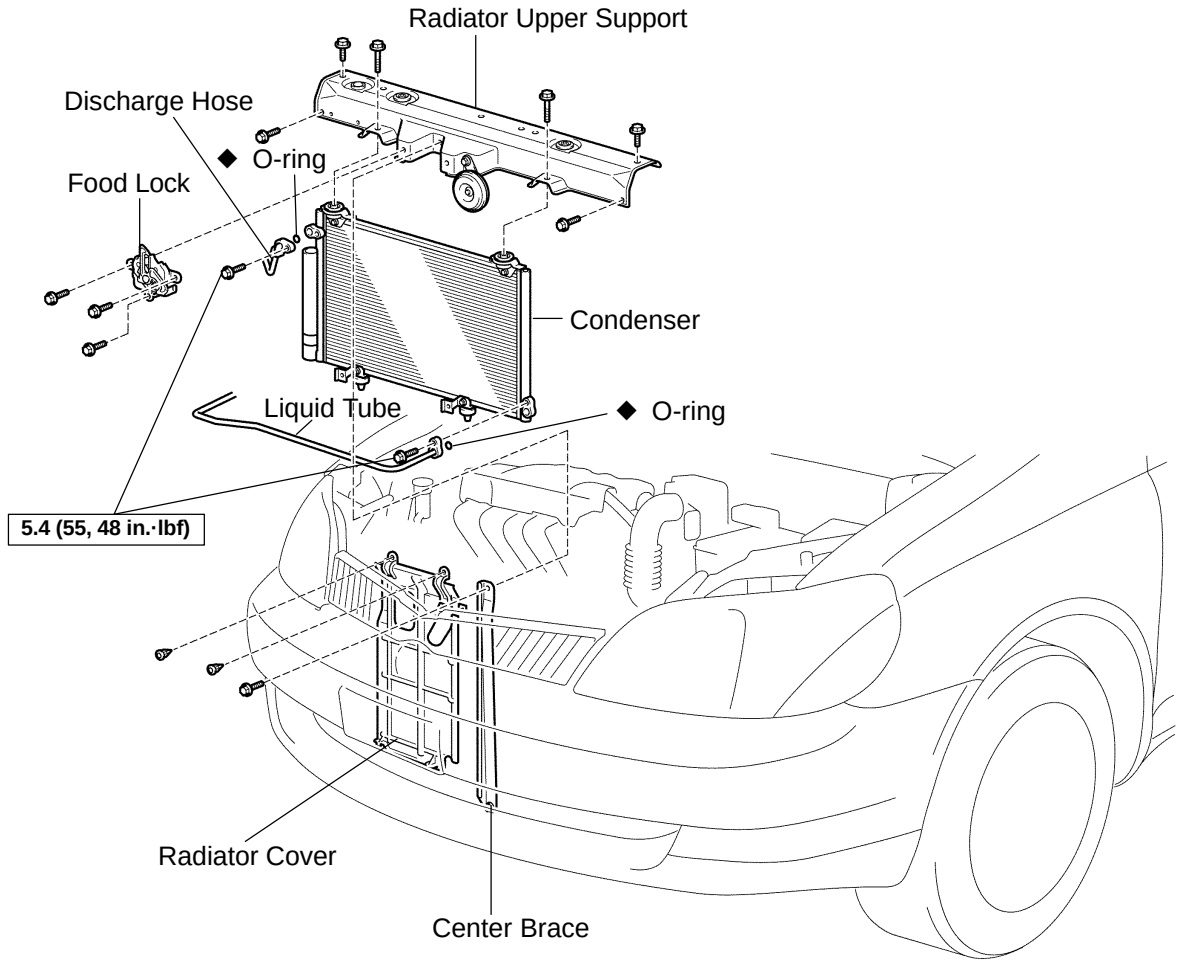

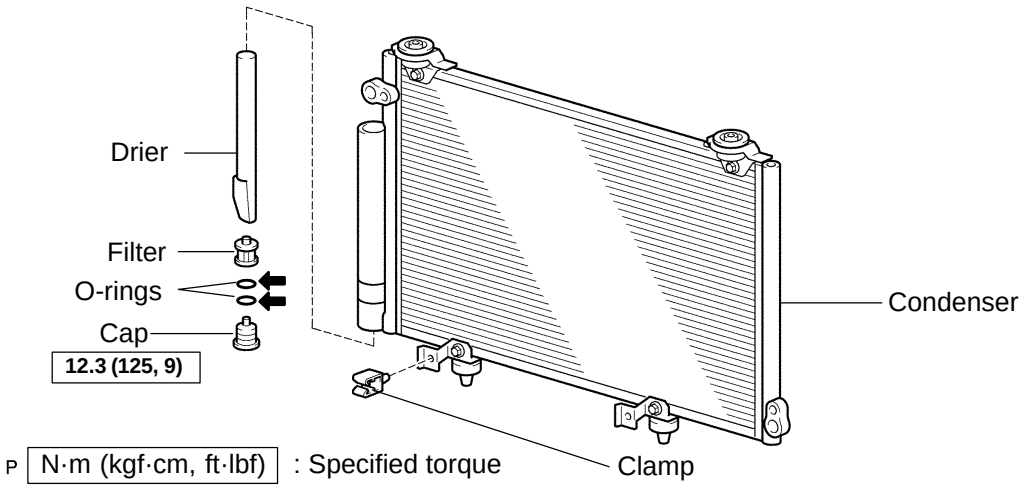

P N·m (kgf·cm, ft·lbf) : Specified torque

◆ Non-reusable part

⬅ Compressor oil ND-OIL 8 or equivalent

I14007

AC0DA-01

INSTALLATION

Installation is in the reverse order of removal (See page AC-51).

CONDENSER

AC0D8-02

ON-VEHICLE INSPECTION

1. INSPECT CONDENSER FINS FOR BLOCKAGE OR DAMAGE

If the fins are clogged, wash them with water and dry with compressed air.

NOTICE:

Be careful not to damage the fins.

If the fins are bent, straighten them with a screwdriver or pliers.

2. INSPECT CONDENSER AND FITTINGS FOR LEAKAGE OF REFRIGERANT

Using a gas leak detector, check for leakage of refrigerant.

If there is leakage, check the tightening torque at the joints.

AC2K0-01

REMOVAL

1. DISCHARGE REFRIGERANT FROM REFRIGERATION SYSTEM

HINT:

At the time of installation, please refer to the following item.

Evacuate air from refrigeration system.

Charge system with refrigerant and inspect for leakage of refrigerant.

Specified amount: 460 ± 30 g (16.23 ± 1.06 oz.)

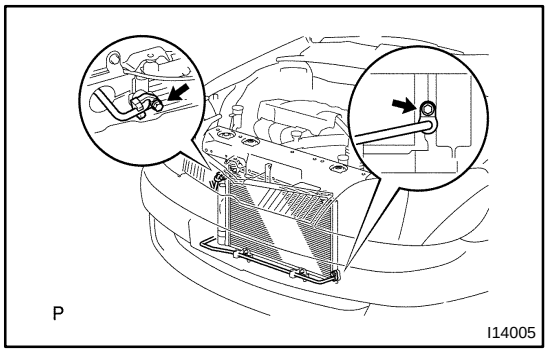

2. DISCONNECT DISCHARGE HOSE AND LIQUID TUBE

Remove the 2 bolts and disconnect the hose and tube.

Torque: 5.4 N·m (55 kgf·cm, 48 in.·lbf)

NOTICE:

Cap open the fittings immediately to keep moisture or dirt out of the system.

HINT:

At the time of installation, please refer to the following item.

Lubricate 2 new O-rings with compressor oil and install them to the tubes.

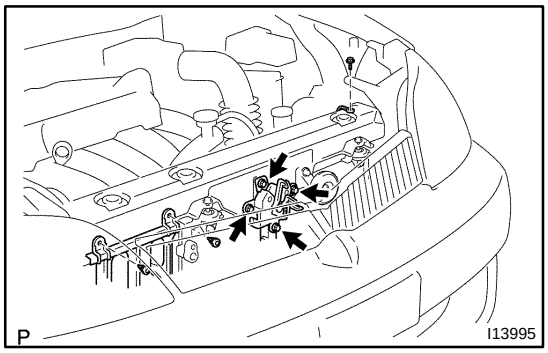

3. REMOVE RADIATOR UPPER SUPPORT

(a) Remove the 3 hood lock set bolts.

(b) Remove the center brace set bolt.

(c) Remove the 2 radiator cover set clips.

(d) Disconnect the connector from the hone.

(e) Remove the earth wire set bolt.

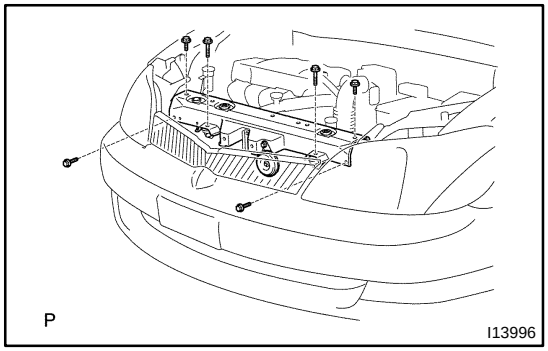

(f) Remove the 6 bolts and radiator upper support.

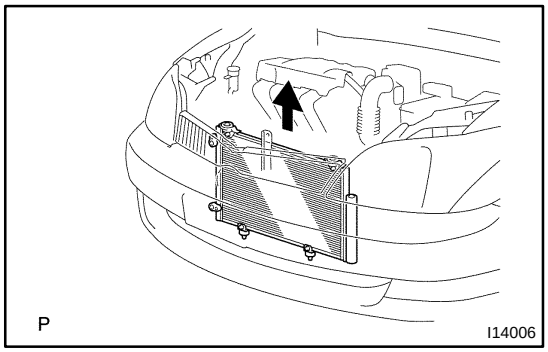

4. REMOVE CONDENSER

Pull out the condenser upward.

HINT:

At the time of installation, please refer to the following item.

If condenser is replaced, add compressor oil to the compressor.

Add 40 cc (1.4 fl.oz.)

Compressor oil: ND-OIL 8 or equivalent

AC28K-04

REPLACEMENT

REPLACE DRIER FROM MODULATOR

(a) Using a hexagon wrench (10 mm, 0.39 in.), remove the cap from the modulator.

(b) Remove the filter from the modulator.

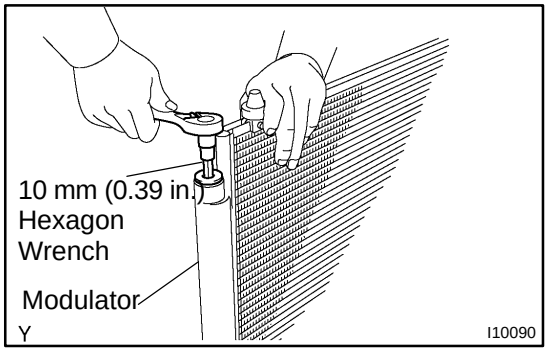

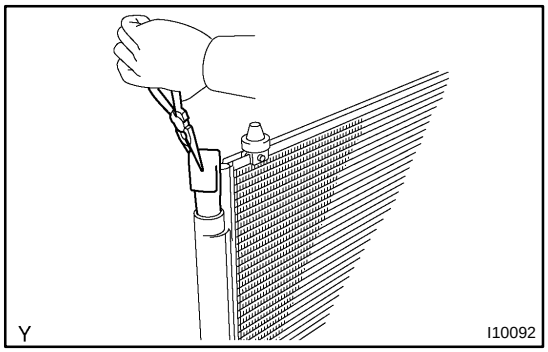

(c) Using pliers, remove the drier.

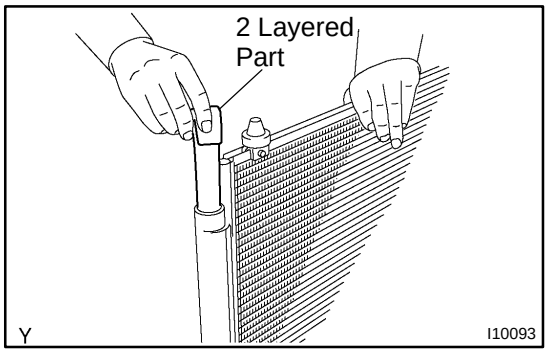

(d) Insert a new drier into the modulator.

NOTICE:

- **Do not remove the drier from a vinyl bag until inserting it into the modulator.**
- **Install the drier with its 2 layered part faced upward to the modulator.**

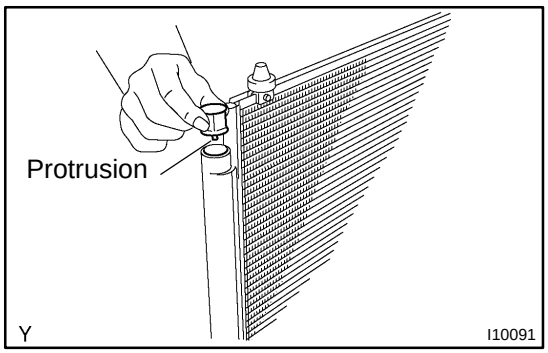

(e) Insert the filter into the modulator.

NOTICE:

Install the filter with its protrusion faced downward to the modulator.

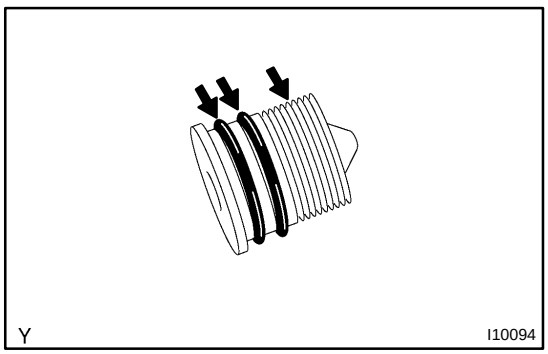

(f) Install the cap to the modulator.

(1) Apply compressor oil to the O-rings and screw part of the cap.

Compressor oil: ND-OIL 8 or equivalent

(2) Using a hexagon wrench (10 mm, 0.39 in.), install the caps.

Torque: 12.3 N·m (125 kgf·cm, 9 ft·lbf)

AC28W-03

COMPONENTS

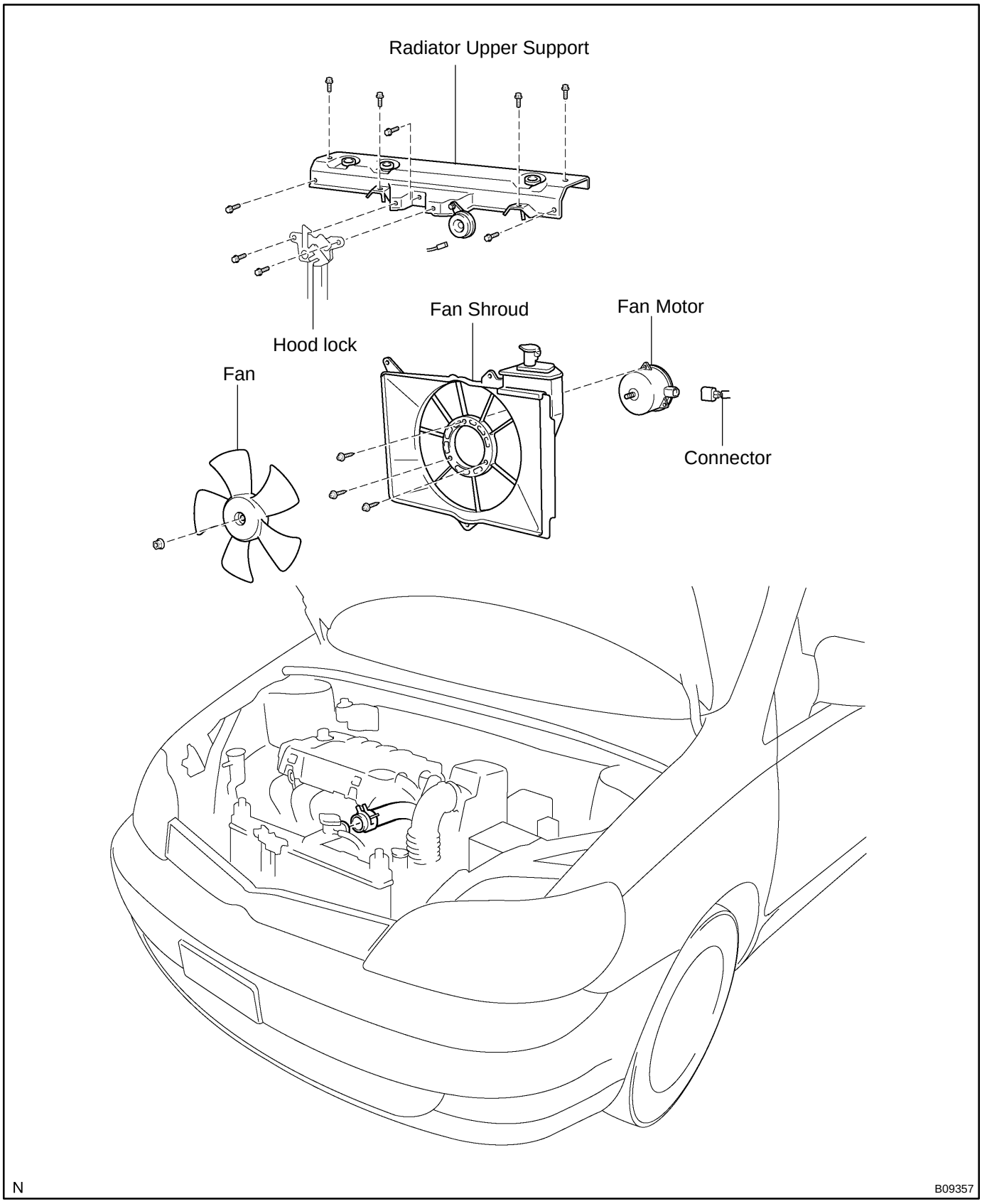

AC28Y-03

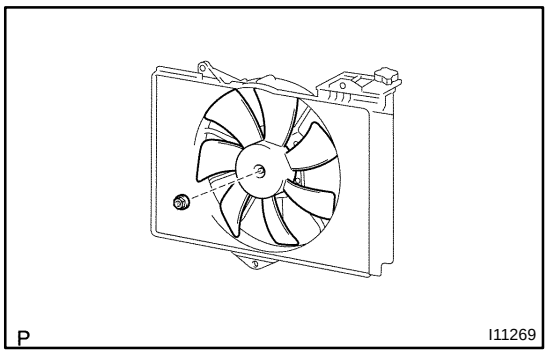

DISASSEMBLY

1. REMOVE FAN

Remove the nut and fan.

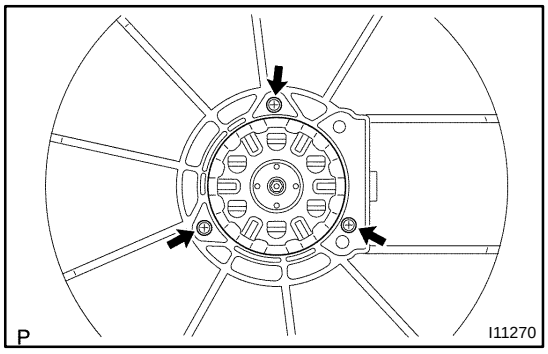

2. REMOVE FAN MOTOR

Remove the 3 screws and fan motor.

AC290-01

INSTALLATION

Installation is in thereverse order of removal (See page AC-70).

CONDENSER FAN

AC28V-03

ON-VEHICLE INSPECTION

1. INSPECT CONDENSER FAN OPERATION

Inspect the fan operation at these conditions, as shown in the chart below.

Test conditions:

- Start engine
- Blower speed control switch position ”HI”
- Temperature control dial at ”COOL” position
- Set on manifold gauge set
- A/C switch ON

Condition	Fan operation (Fan Speed)
Water temperature below 83 ˚C (121 ˚F)	Rotate (Low speed)
Water temperature above 90 ˚C (194 ˚F)	Rotate (High speed)
Refrigerant pressure is less than 1,520 kPa (15.5 kgf·cm^2, 220 psi)	Rotate (Low speed)
Refrigerant pressure is 1,520 kPa (15.5 kgf·cm^2, 220 psi) or above	Rotate (High speed)

If operation is not as specified, proceed to the next inspection.

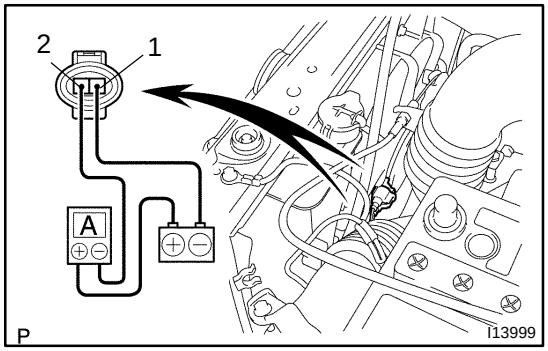

2. INSPECT CONDENSER FAN MOTOR OPERATION

(a) Disconnect the fan connector.

(b) Connect battery and ammeter to fan connector, as shown in the illustration.

(c) Check that the fan rotates smoothly, and then check the reading on the ammeter.

Specified amperage:

Marking 1 (80 W): 6.5 ± 1.0A at 25 ˚C (77 ˚F)

Marking 2 (120 W): 9.8 ± 1.0A at 25 ˚C (77 ˚F)

If operation is not as specified, replace the fan motor.

If operation is as specified, check the pressure switch, cooling fan relays and water temp. switch.

AC28Z-01

REASSEMBLY

Reassembly is in the reverse order of disassembly (See page AC-71).

AC28X-03

REMOVAL

1. DRAIN ENGINE COOLANT FROM RADIATOR

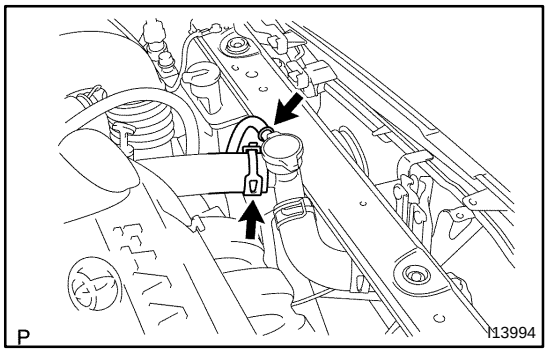

2. DISCONNECT UPPER RADIATOR HOSE

3. DISCONNECT RESERVOIR HOSE

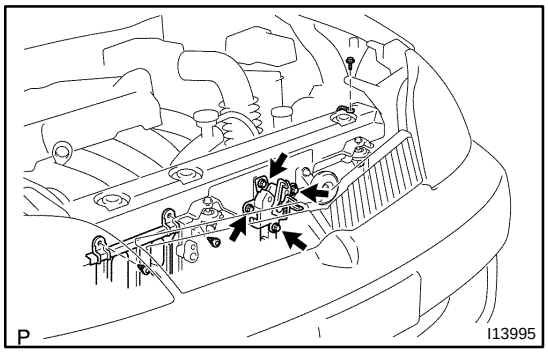

4. REMOVE RADIATOR UPPER SUPPORT

(a) Remove the 3 hood lock set bolts.

(b) Remove the center brace set bolt.

(c) Remove the 2 radiator cover set the hone.

(d) disconnect the connector from the hone.

(e) Remove the earth wire set bolt.

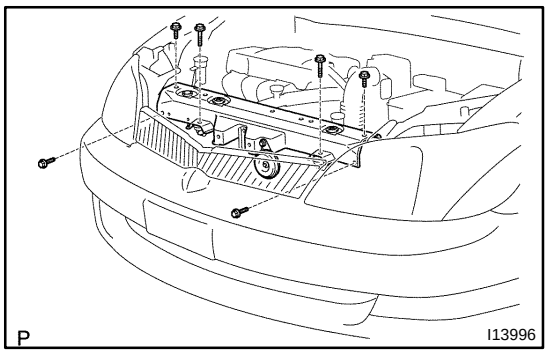

(f) Remove the 6 bolts and radiator upper support.

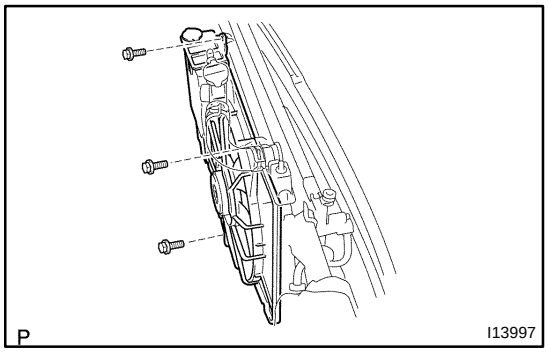

5. REMOVE CONDENSER FAN

(a) Disconnect the connector.

(b) Remove the 3 bolts and condenser fan.
Torque: 7.5 N·m (80 kgf·cm, 69 in.·lbf)

AC2JV-01

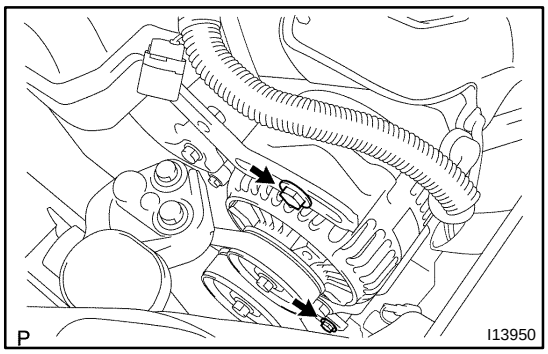

INSTALLATION

INSTALL DRIVE BELT

(a) Install the drive belt.

(b) Apply drive belt tension by turning adjusting bolt.
Drive belt tension:
New belt: 7.0 - 8.5 mm (0.28 - 0.33 in.)
Used belt: 11.0 - 13.0 mm (0.43 - 0.51 in.)

(c) Tighten the pivot bolt.
Torque: 54 N·m (540 kgf·cm, 39 ft·lbf)

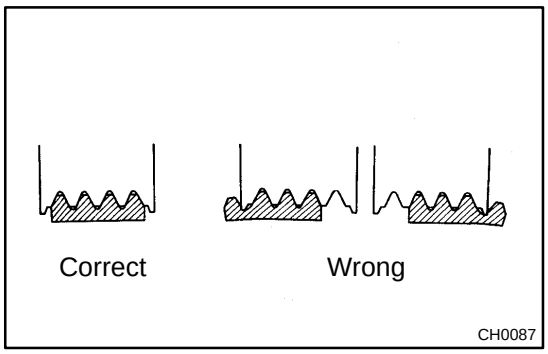

DRIVE BELT

AC2JT-01

ON-VEHICLE INSPECTION

1. INSPECT DRIVE BELT'S INSTALLATION CONDITION

Check that the drive belt fits properly in the ribbed grooves.

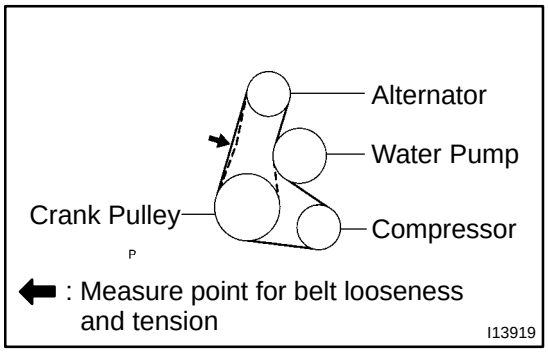

2. INSPECT DRIVE BELT DEFLECTION

(a) Using a belt tension gauge, apply load of 98 N (10 kgf, 22 lbf).

(b) Measure drive belt deflection.

Drive belt deflection:

New belt: 7.0 - 8.5 mm (0.28 - 0.33 in.)

Used belt: 11.0 - 13.0 mm (0.43 - 0.51 in.)

HINT:

- "New belt" refers to a belt which has been used less than 5 minutes on a running engine.
- "Used belt" refers to a belt which has been used on a running engine for 5 minutes or more.
- After installing the drive belt, check that it fits properly in the ribbed grooves.

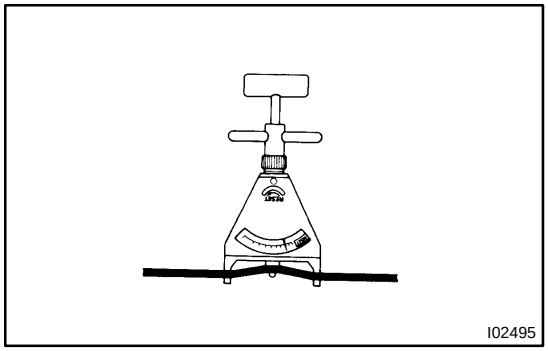

3. INSPECT DRIVE BELT TENSION (Reference)

Using a belt tension gauge, check the drive belt tension.

Drive belt tension:

New belt: 490 - 690 N (50 - 70 kgf)

Used belt: 340 - 440 N (35 - 45 kgf)

AC2JU-01

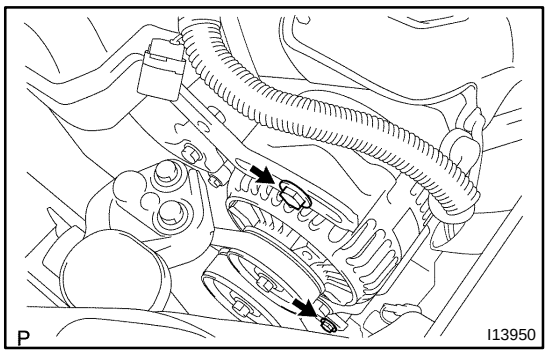

REMOVAL

REMOVE DRIVE BELT

(a) Loosen the pivot bolt.

(b) Loosen the drive belt tension by turning adjusting bolt and remove the drive belt.

EXPANSION VALVE

AC28L-01

ON-VEHICLE INSPECTION

1. CHECK QUANTITY OF GAS DURING REFRIGERATION CYCLE

2. SET ON MANIFOLD GAUGE SET (See page AC-19)

3. RUN ENGINE

Run the engine at 1,500 rpm for at least 5 minutes.

Then check that the high pressure reading is 1.37 - 1.57 MPa (14 - 16 kgf/cm^2, 199 - 228 psi).

4. CHECK EXPANSION VALVE

If the expansion valve is faulty, the low pressure reading will drop to 0 kPa (0 kgf/cm^2, 0 psi).

HINT:

When the low pressure drops to 0 kPa (0 kgf/cm^2, 0 psi), check the receiver's IN and OUT sides is no temperature difference.

AC2K1-01

REPLACEMENT

1. **DISCHARGE REFRIGERANT FROM REFRIGERATION SYSTEM**
2. **DISCONNECT LIQUID TUBE AND SUCTION HOSE FROM A/C UNIT (See page AC-27)**

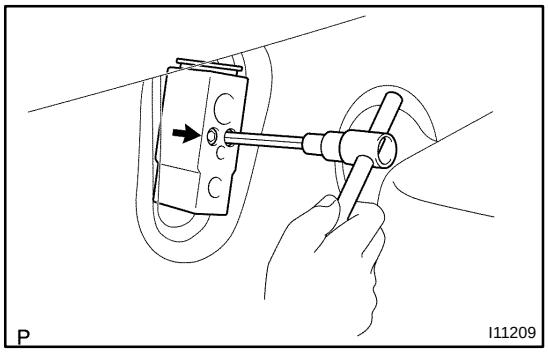

3. **REMOVE EXPANSION VALVE**

Using a hexagon wrench (5.0 mm, 0.20 in.), remove the 2 bolts and separate the expansion valve and evaporator.

Torque: 5.4 N·m (55 kgf·cm, 48 in.·lbf)

4. **INSTALL NEW EXPANSION VALVE**

(a) Lubricate 2 new O-rings with compressor oil and install them to the expansion valve.

(b) Install the expansion valve.

(c) Using a hexagon wrench (5.0 mm, 0.20 in.), install the 2 bolts.

Torque: 3.4 N·m (35 kgf·cm, 30 in.·lbf)

5. **CONNECT LIQUID TUBE AND SUCTION HOSE (See page AC-27)**
6. **CHARGE SYSTEM WITH REFRIGERANT**

(a) Evacuate air from refrigeration system.

(b) Charge system with refrigerant and inspect for leakage of refrigerant.

Specified amount: 460 ± 30 g (16.23 ± 1.06 oz.)

AC296-03

COMPONENTS

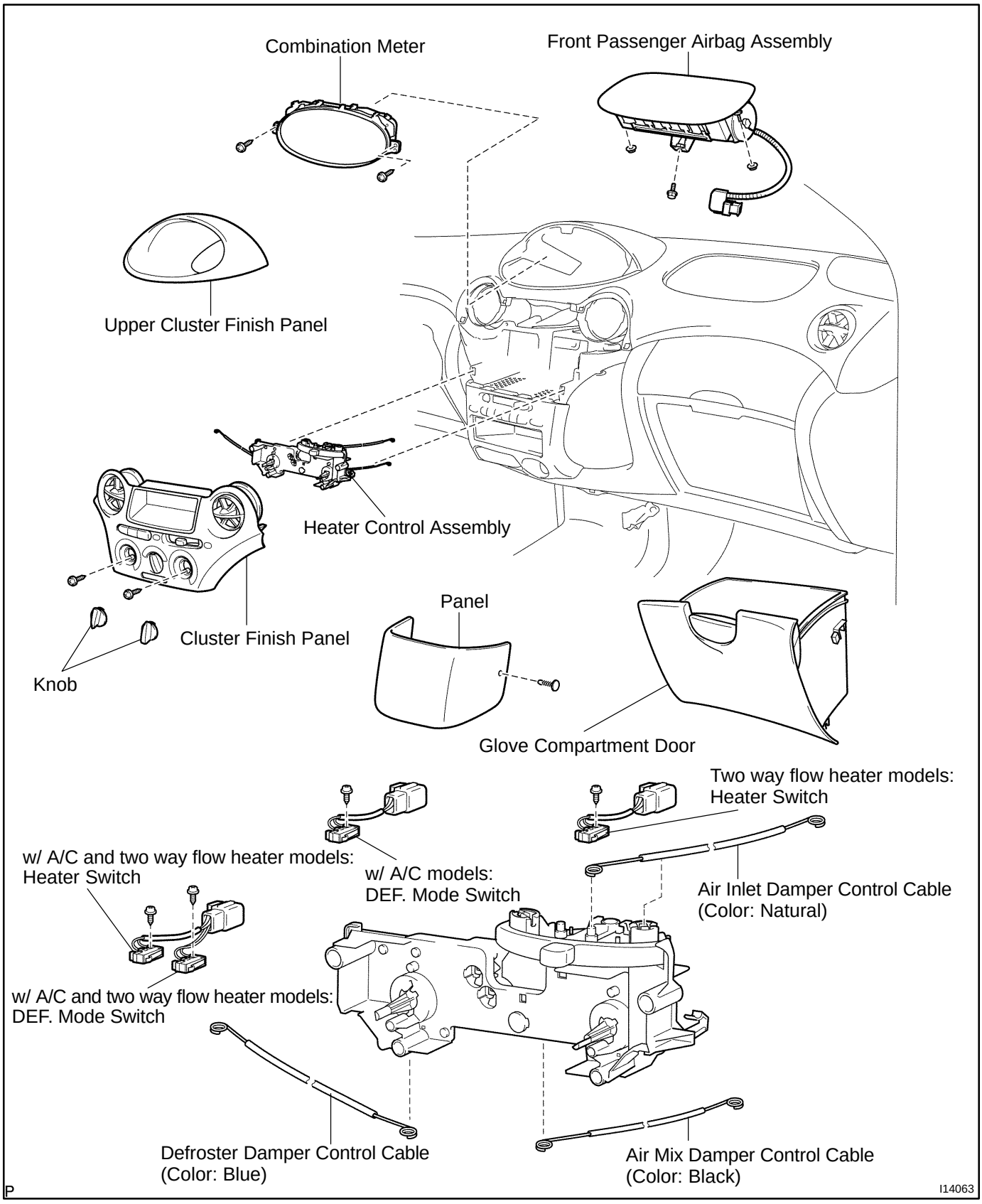

AC2K6-01

DISASSEMBLY

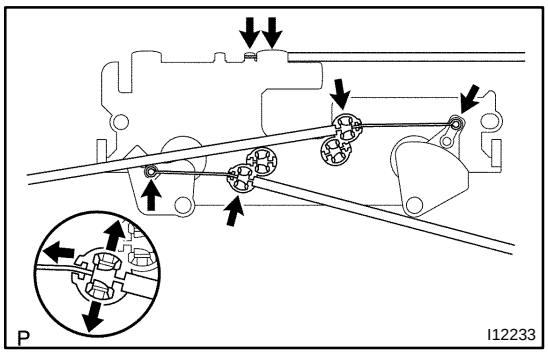

1. REMOVE HEATER CONTROL CABLES

(a) Using a screwdriver, open the claw of the cable clamp and disconnect the outer cable.

HINT:

Tape the screwdriver tip before use.

(b) Remove the inner cable from the heater control assembly.

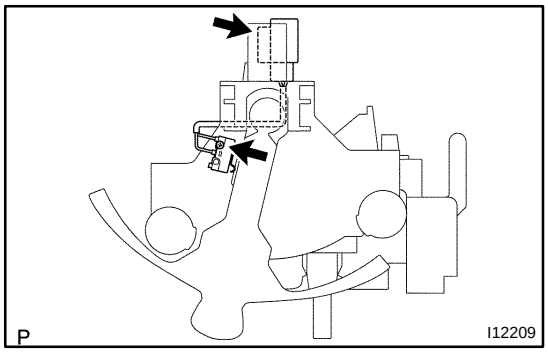

2. Two way flow heater models: REMOVE HEATER SWITCH

(a) Disconnect the connector clamp.

(b) Remove the screw and heater switch.

AC2K7-01

INSPECTION

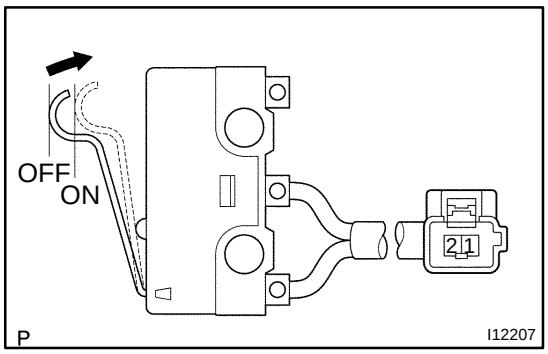

1. Two way flow heater models:
INSPECT HEATER SWITCH CONTINUITY

Check the continuity exists between terminals while switch is pressed.

If no continuity exists, replace the heater switch.

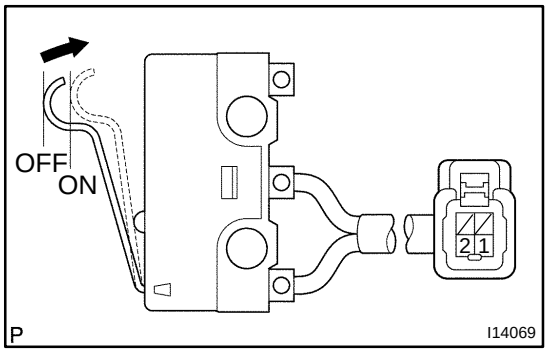

2. Two way flow heater models:
INSPECT DEF. MODE SWITCH CONTINUITY

Check the continuity exists between terminals while switch is pressed.

If no continuity exists, replace the heater switch.

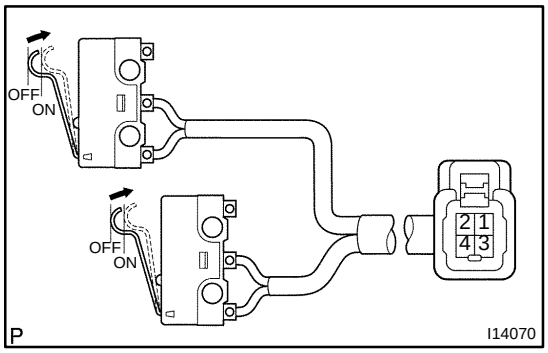

3. w/ A/C and two way flow heater models:
INSPECT HEATER SWITCH CONTINUITY

Check the continuity exists between terminal 1 and 2 while switch is pressed.

If no continuity exists, replace the heater switch.

4. w/ A/C and two way flow heater models:
INSPECT DEF. MODE SWITCH CONTINUITY

Check the continuity exists between terminal 3 and 4 while switch is pressed.

If no continuity exists, replace the DEF. mode switch.

AC29B-03

INSTALLATION

1. INSTALL HEATER CONTROL ASSEMBLY

(a) Install the heater control assembly temporarily.

(b) Pass the heater control cables as shown in the illustration.

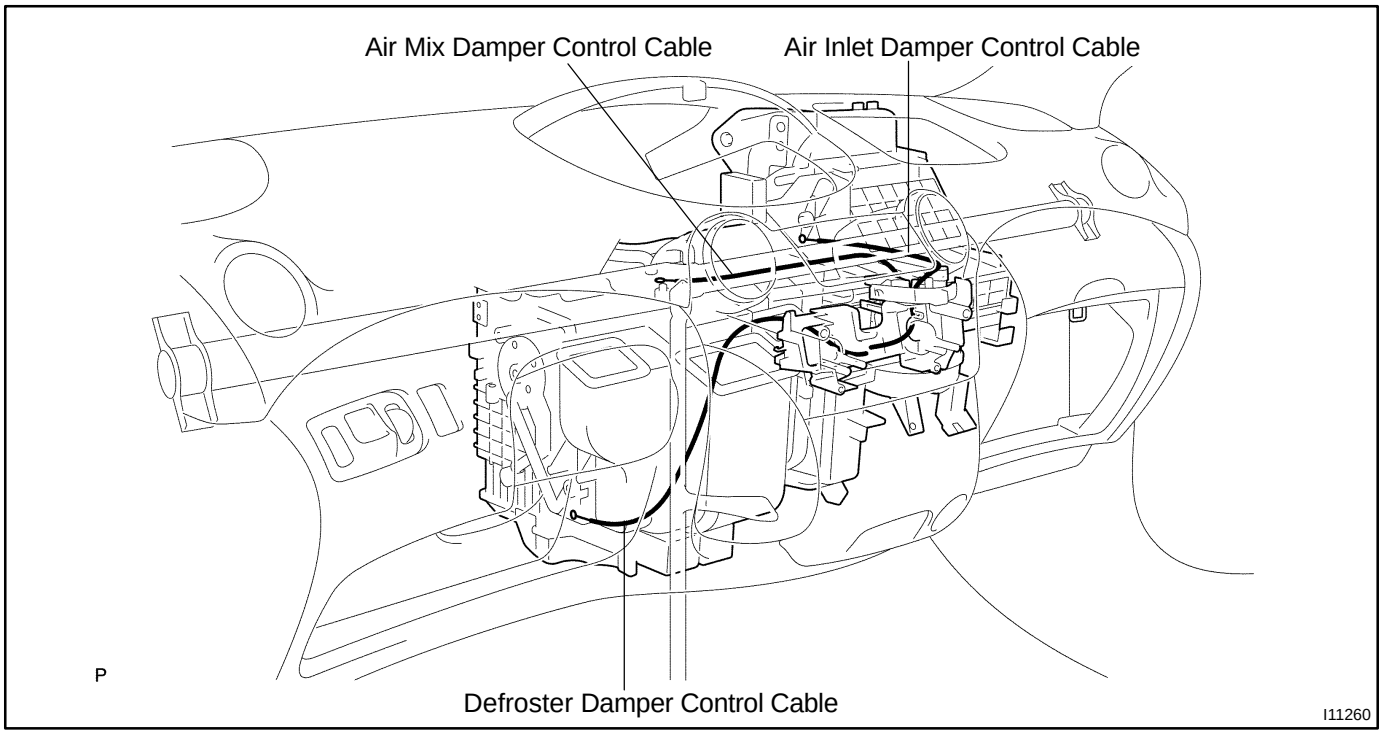

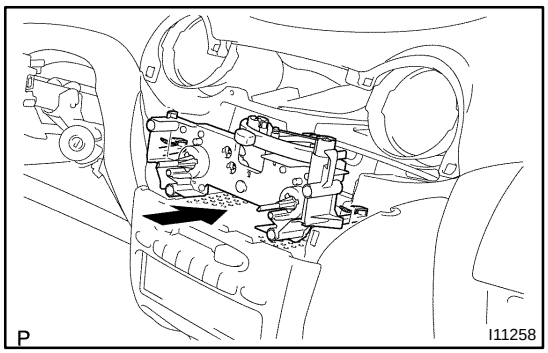

(c) Fit the 2 claws of heater control assembly in the instrument panel hole.

2. CONNECT HEATER CONTROL CABLES

(a) Set air inlet selector to ”RECIRC” position.

(b) Set temperature control selector to ”MAX. COOL” position.

(c) Set mode selector to ”FACE” position.

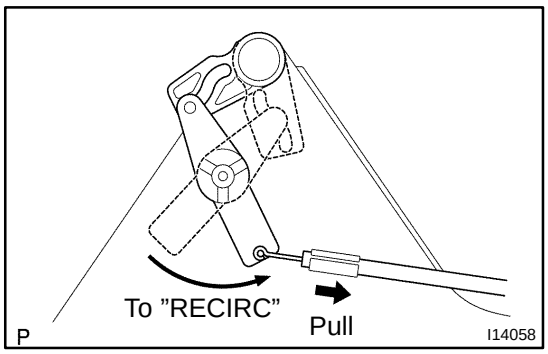

(d) Standard heater models only:
Adjust air inlet control cable.
Set air inlet damper control lever to "RECIRC" position and connect the inner cable to lever pin and clamp the outer cable.

HINT:
Lock the clamp while lightly pulling the outer cable to the direction shown by arrow in the illustration.

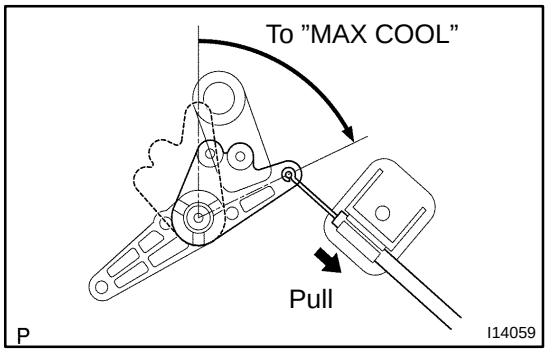

(e) Adjust air mix control cable.
Set air mix damper control lever to "MAX. COOL" position and connect the inner cable to lever pin and clamp the outer cable.

HINT:
Lock the clamp while lightly pulling the outer cable to the direction shown by arrow in the illustration.

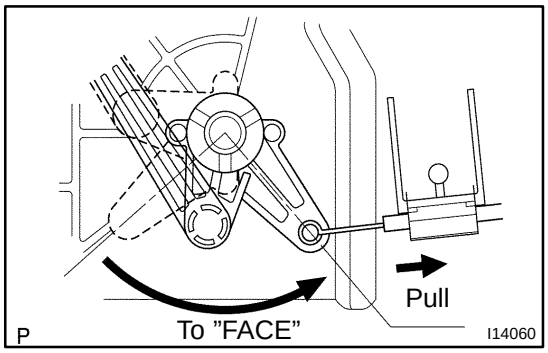

(f) Adjust defroster control cable.
Pull the air inlet control link to "FACE" position, connect the control cable and lock the clamp.

HINT:
Lock the clamp while lightly pulling the outer cable to the direction shown by arrow in the illustration.

3. **INSTALL COMBINATION METER**
4. **INSTALL CLUSTER FINISH PANEL (Combination meter)**
5. **INSTALL FRONT PASSENGER AIRBAG ASSEMBLY (See page RS-37)**
6. **INSTALL CLUSTER FINISH PANEL**

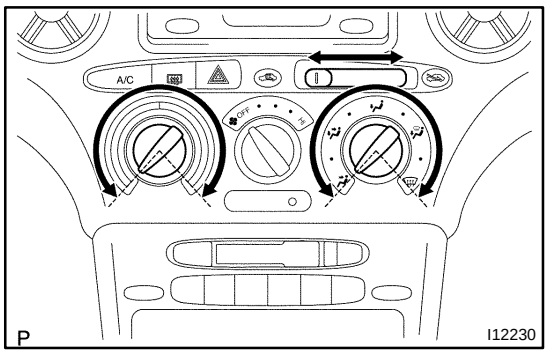

HEATER CONTROL ASSEMBLY

AC295-03

ON-VEHICLE INSPECTION

INSPECT HEATER CONTROL DIALS OPERATION

Turn the control lever and dials left and right then check that click sound can be heard and recoil is felt.

If click sound can not be heard or recoil is felt, adjust the control cable or check control cable and heater control assembly.

AC29A-01

REASSEMBLY

Reassembly is in the reverse order of disassembly (See page AC-81).

AC297-02

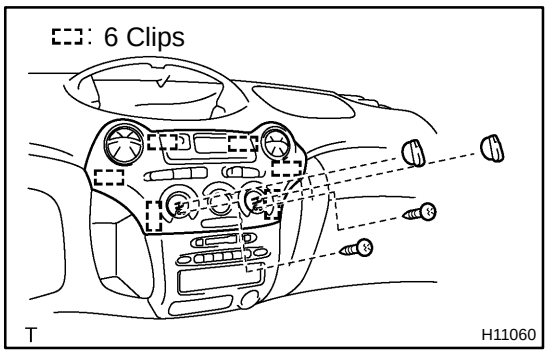

REMOVAL

1. REMOVE CLUSTER FINISH PANEL (Integration panel)

(a) Using pliers, pull out the 2 knobs.

HINT:

Cover the knobs with a cloth, when pulling the knobs.

(b) Remove the 2 screws.

(c) Using a screwdriver, release the 6 fitting clips and pull out the cluster finish panel, then disconnect the connectors.

HINT:

Tape the screwdriver tip before use.

2. REMOVE FRONT PASSENGER AIRBAG ASSEMBLY (See page RS-28)

3. REMOVE CLUSTER PANEL (Combination meter)

4. REMOVE COMBINATION METER

5. DISCONNECT HEATER CONTROL CABLES

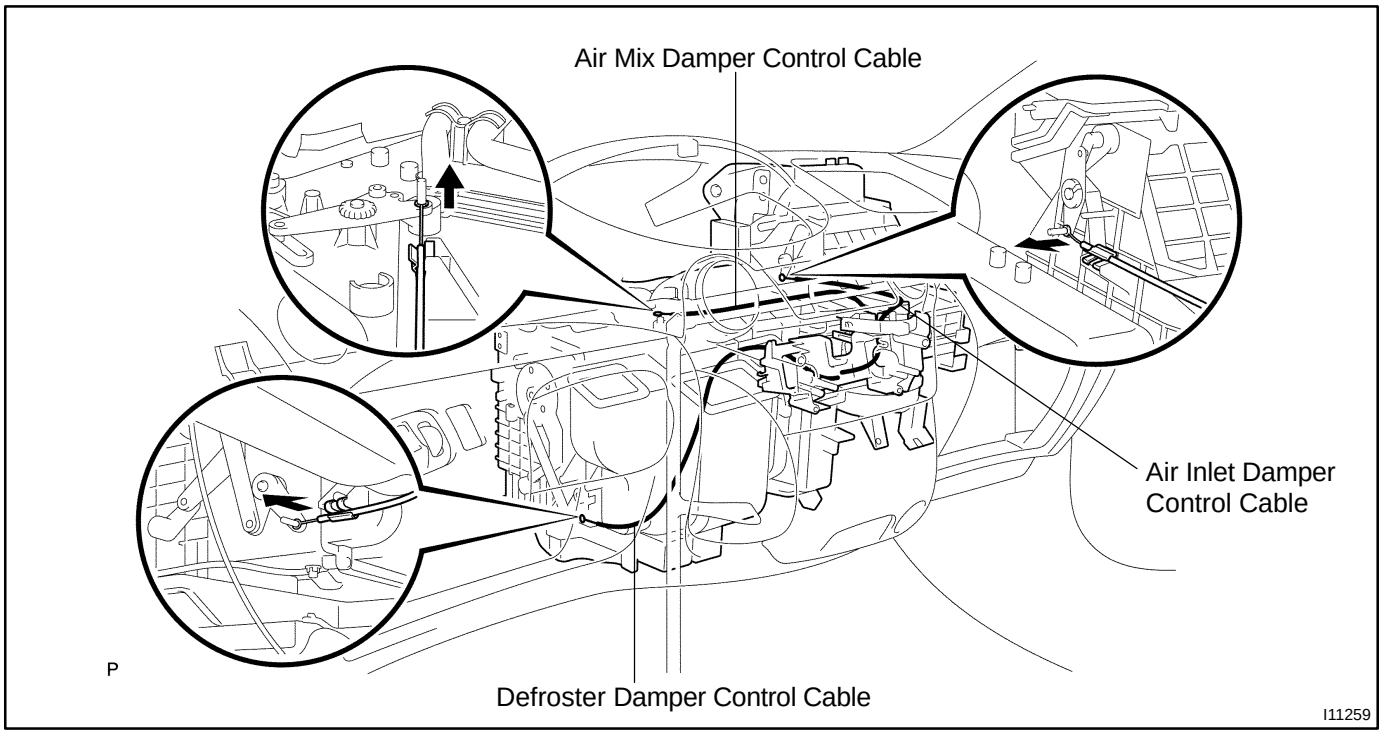

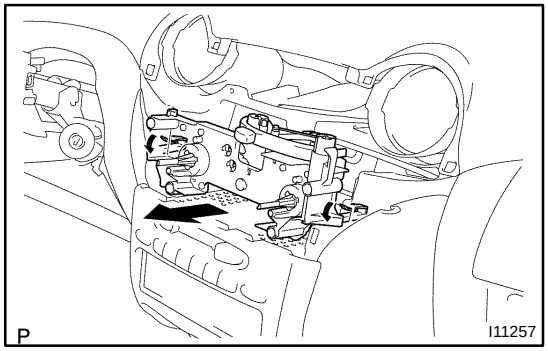

6. REMOVE HEATER CONTROL ASSEMBLY

Release the 2 claws and pull out the heater control assembly.

HEATER CONTROL ASSEMBLY (Center Cluster Integration)

AC29C-03

COMPONENTS

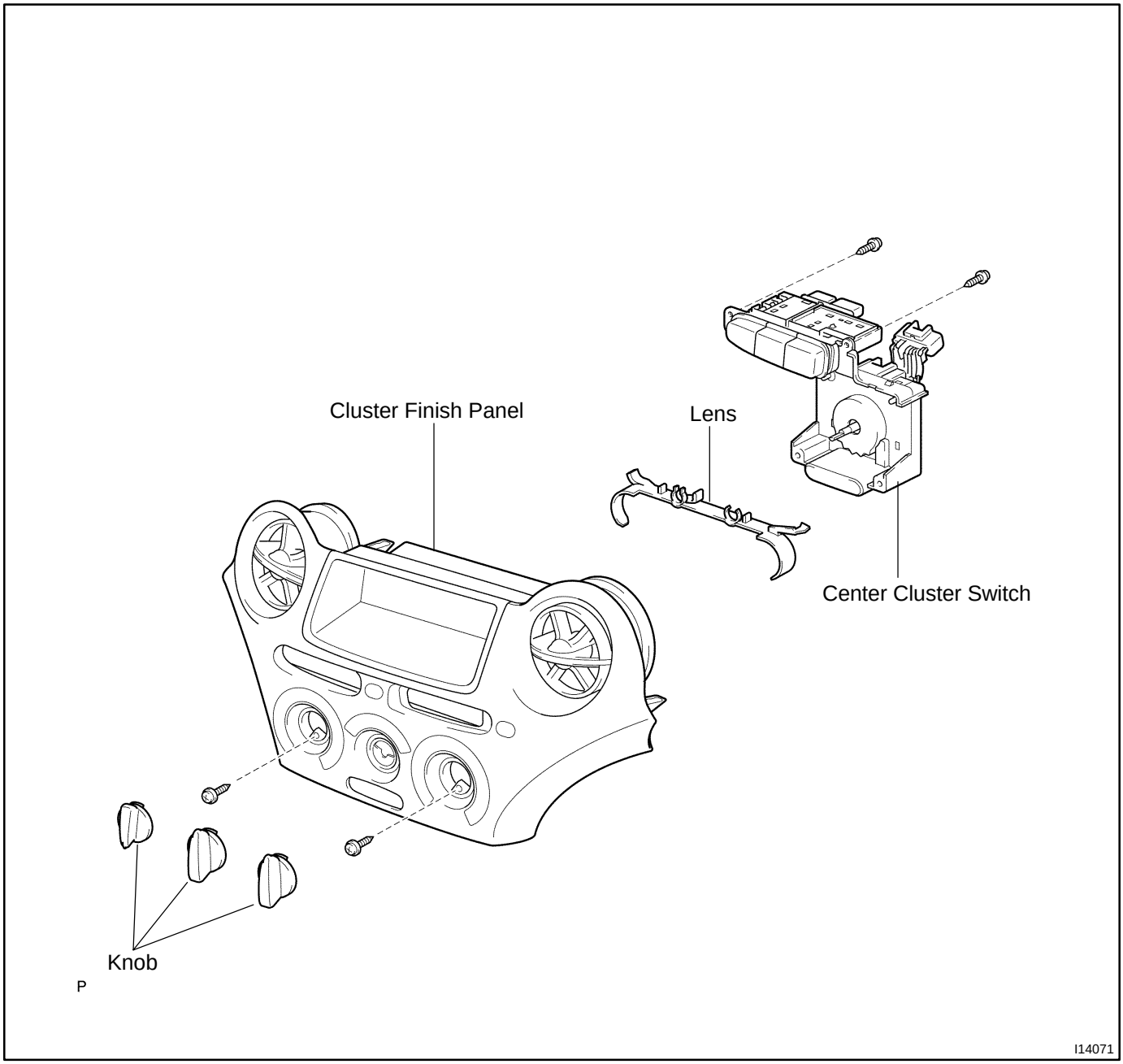

AC29D-02

DISASSEMBLY

1. REMOVE CLUSTER FINISH PANEL
(See page BO-76)

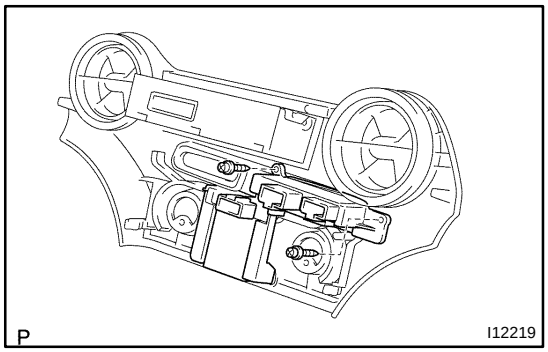

2. REMOVE CENTER CLUSTER SWITCH

(a) Remove the knob.

(b) Release the 2 claws and remove the switch.

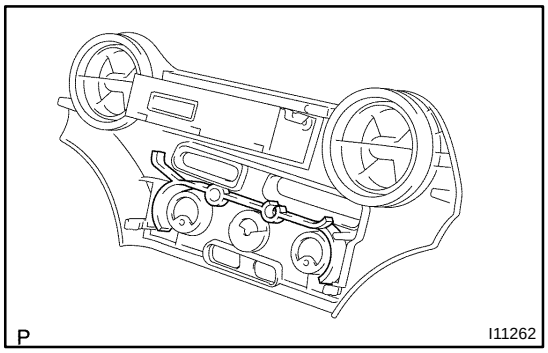

3. REMOVE LENS

AC29E-03

INSPECTION

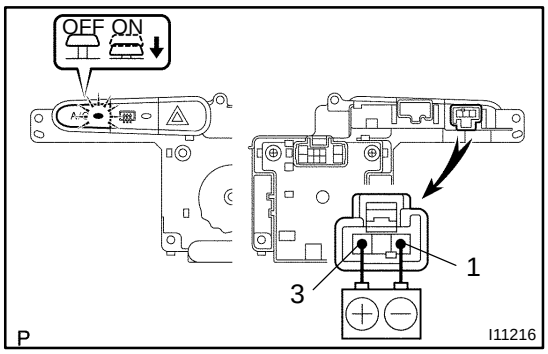

1. INSPECT A/C INDICATOR OPERATION

Connect the positive (+) lead from the battery to terminal 3 and negative (-) lead to terminal 1, then check that the A/C indicator lights up while A/C switch is pressed.

If operation is not as specified, replace the center cluster switch.

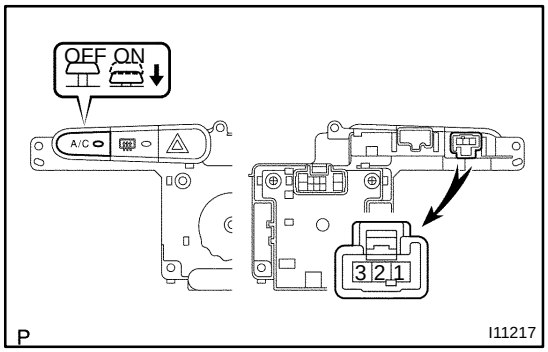

2. INSPECT A/C SWITCH CONTINUITY

Check the continuity exists between terminals 2 and 3 while switch is pressed.

If no continuity exists, replace the center cluster switch.

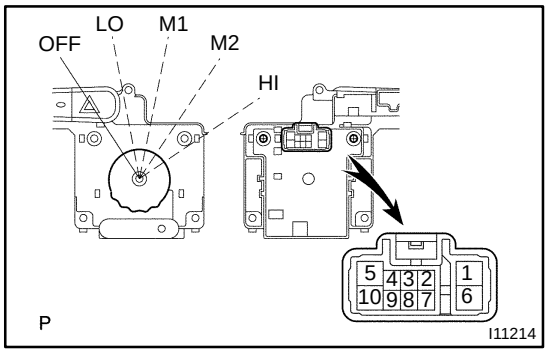

3. INSPECT BLOWER SWITCH CONTINUITY

Position / Circuit	Tester connection	Specified condition
OFF	-	No continuity
LO	1 - 2	Continuity
M1	1 - 2 - 7	Continuity
M2	1 - 2 - 6	Continuity
HI	1 - 2 - 10	Continuity
Illumination circuit	1 - 4	Continuity

Switch continuity:

If continuity is not as specified, replace the center cluster switch.

Illumination circuit:

If continuity is not as specified, replace the bulb.

AC29F-01

REASSEMBLY

Reassembly is in the reverse order of disassembly (See page AC-87).

HEATER UNIT

COMPONENTS

AC28A-03

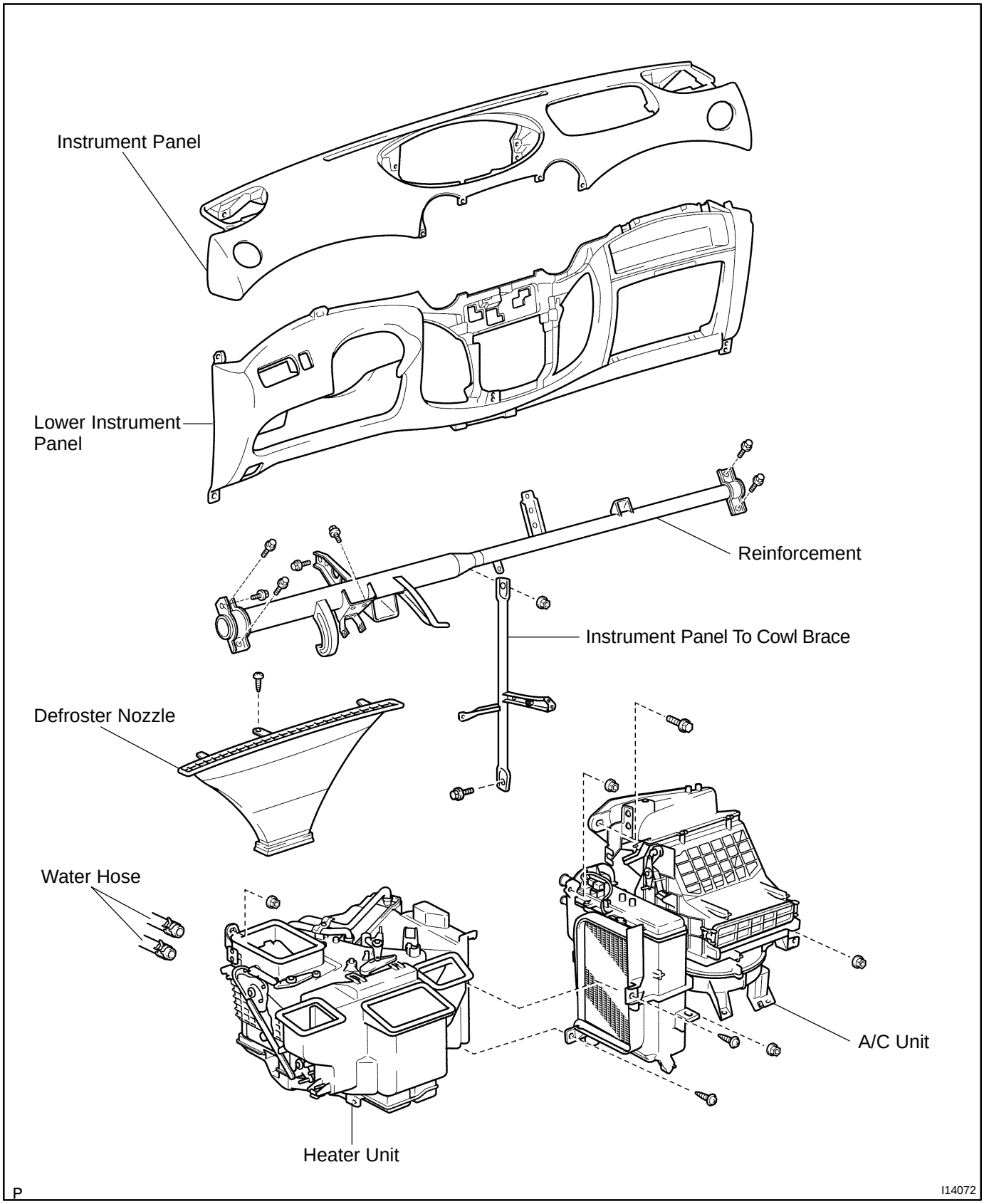

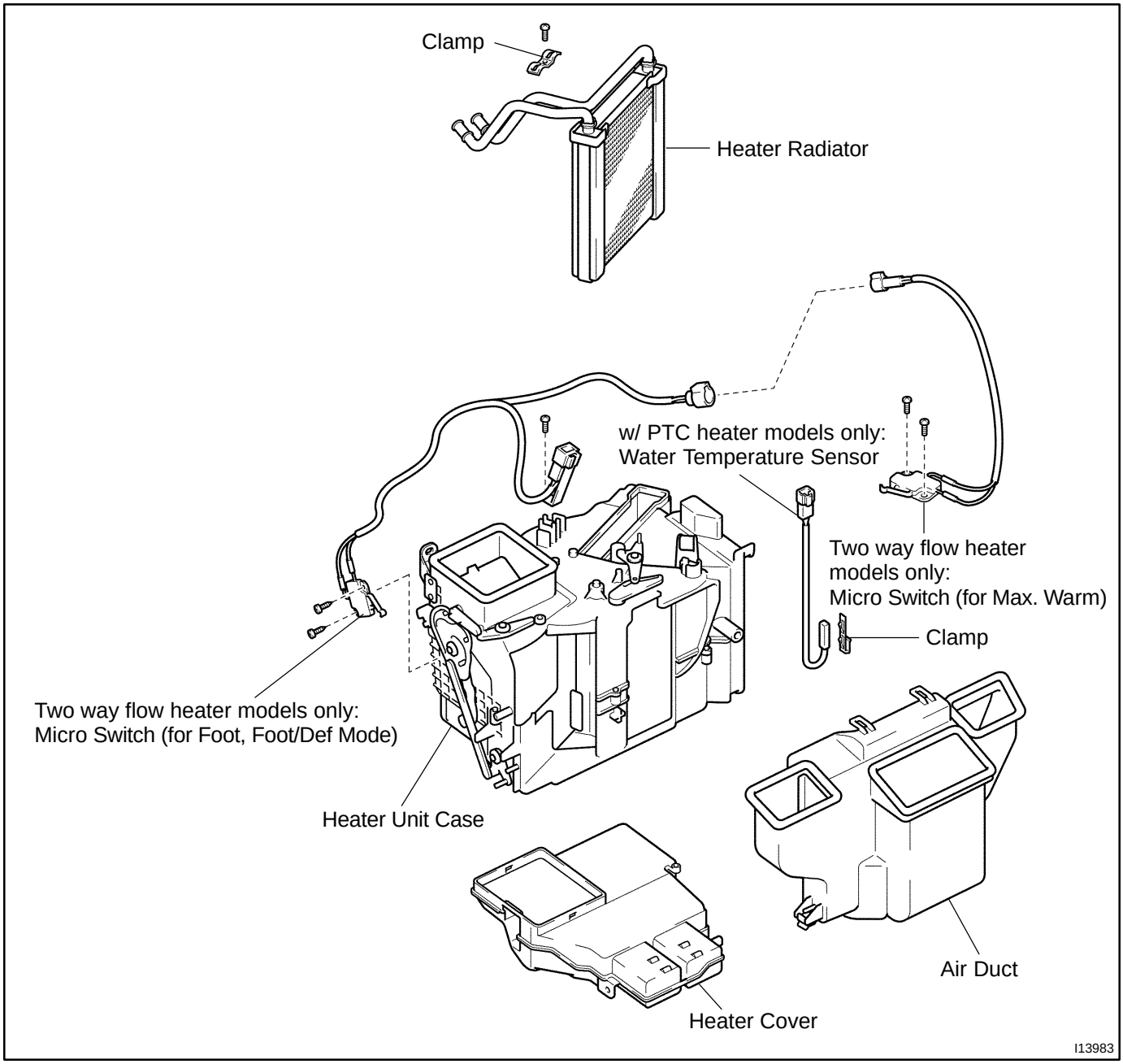
Clamp
Heater Radiator
w/ PTC heater models only:
Water Temperature Sensor
Two way flow heater
models only:
Micro Switch (for Max. Warm)
Clamp
Two way flow heater models only:
Micro Switch (for Foot, Foot/Def Mode)
Heater Unit Case
Air Duct
Heater Cover
I13983

AC2JX-01

DISASSEMBLY

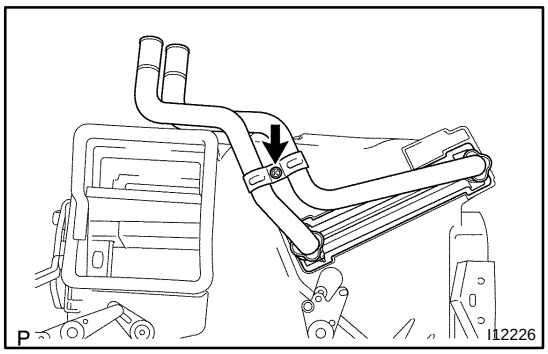

1. REMOVE HEATER RADIATOR

(a) PTC heater models only:
Disconnect the connector clamp.
(b) Remove the screw and clamp.
(c) Pull out the heater radiator.

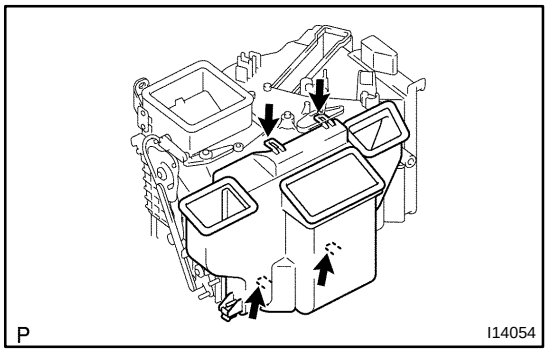

2. REMOVE AIR DUCT

Release the 4 claws and remove the air duct.

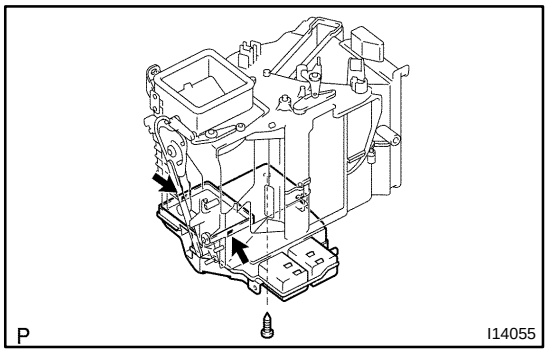

3. REMOVE HEATER COVER

Release the 2 claws, remove the screw and heater cover.

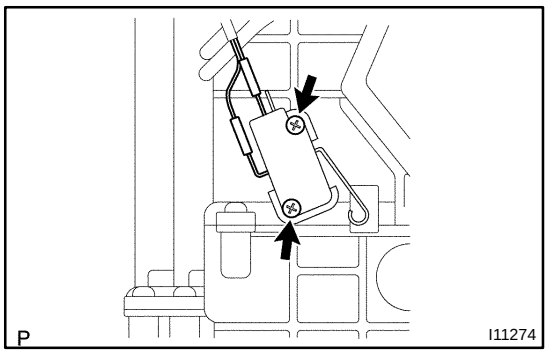

4. Two way flow heater models only:
REMOVE MICRO SWITCH (for FOOT, FOOT / DEF. mode)

(a) Disconnect the connector.
(b) Remove the connector set screw.
(c) Remove the 2 screws and switch.

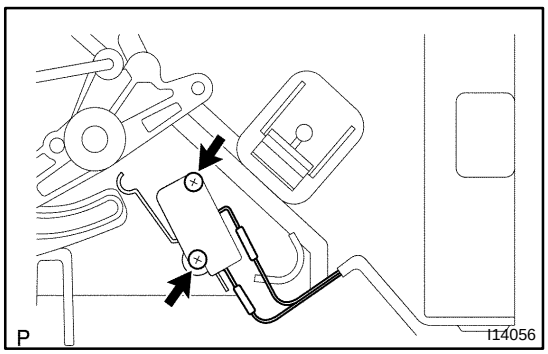

5. Two way flow heater models only:
REMOVE MICRO SWITCH (for MAX. WARM)

Remove the 2 screws and switch.

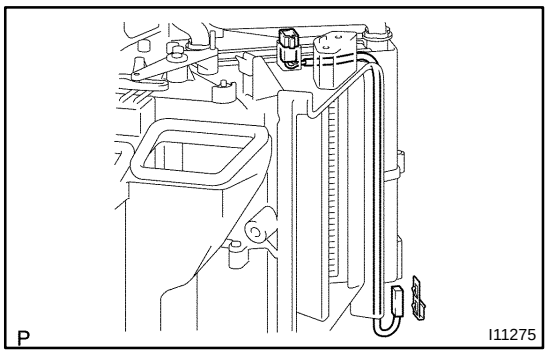

6. w/ PTC heater models only:
REMOVE WATER TEMPERATURE SENSOR

(a) Disconnect the connector clamp.

(b) After pulling off the clamp, pull out the sensor.

7. PTC heater and two way flow heater models only:
REMOVE WIRE HARNESS

Remove the screw and wire harness.

AC28D-02

INSPECTION

1. CHECK HEATER RADIATOR FINS FOR BLOCKAGE

If the fins are clogged, clean them with compressed air.

2. CHECK FITTING FOR CRACKS OR SCRATCHES

If necessary repair or replace.

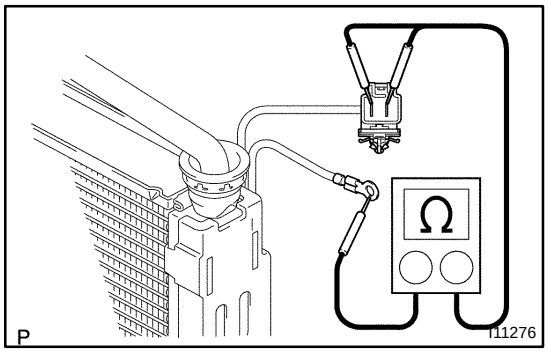

3. PTC heater models only:
INSPECT PTC HEATER CONTINUITY

Using an ohmmeter, check continuity exists between each terminal of connector and earth wire.

If no continuity exists, replace the heater radiator.

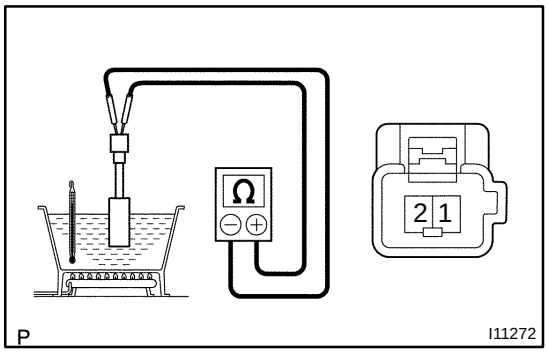

4. PTC heater models only:
INSPECT WATER TEMPERATURE SENSOR

Measure resistance between terminals at each temperature.

Standard resistance:
25 ˚C (77 ˚F): 5.0 ± 0.2 kΩ
40 ˚C (104 ˚F): 2.7 ± 0.15 kΩ
100 ˚C (212 ˚F): 0.3 ± 0.04 kΩ

If resistance is not as specified, replace the sensor.

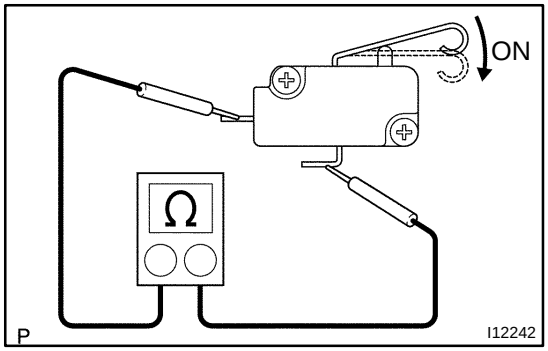

5. Two way flow heater models only:
INSPECT MICRO SWITCH CONTINUITY

Check the continuity exists between terminals while switch is pressed.

If no continuity exists, replace the switch.

AC0CO-01

INSTALLATION

Installation is in the reverse order of removal (See page AC-36).

AC0CN-01

REASSEMBLY

Reassembly is in the reverse order of disassembly (See page AC-37).

AC28B-03

REMOVAL

1. DRAIN ENGINE COOLANT FROM RADIATOR

HINT:

It is not necessary to drain out all the coolant.

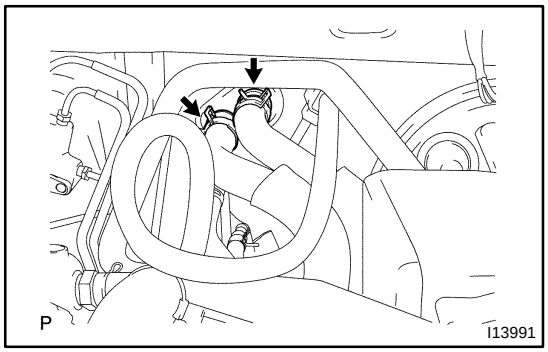

2. DISCONNECT WATER HOSES FROM HEATER RADIATOR PIPES

(a) Using pliers, grip the claws of the hose clip and slide the clip along the hose.

(b) Disconnect the water hoses.

(c) Remove the grommet.

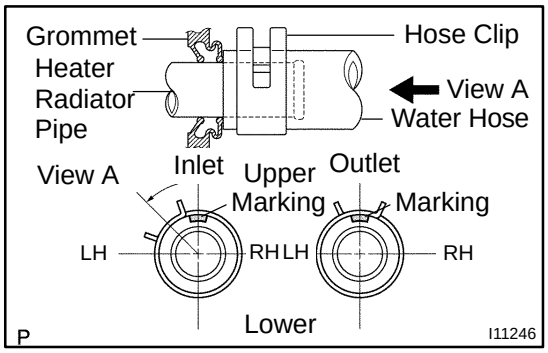

HINT:

At the time of installation, please refer to the following items.

- Push the water hose onto the heater radiator pipe as far as the grommet.
- Install the hose clip in a position, as shown in the illustration.

3. REMOVE A/C UNIT (See page AC-27)

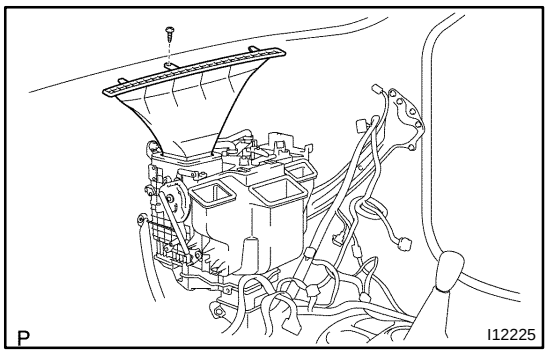

4. REMOVE HEATER UNIT

(a) Remove the screw and defroster nozzle.

(b) PTC heater and two way flow heater models only: Disconnect the connectors.

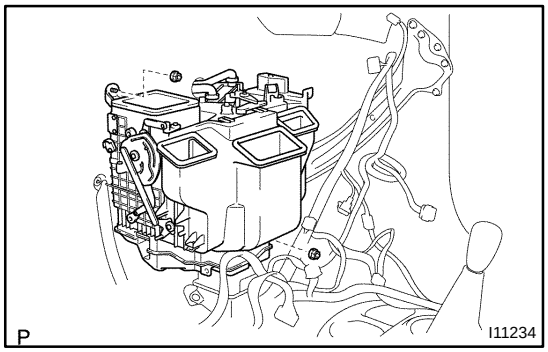

(c) Remove the 2 floor carpet set clips.

(d) Remove the 2 nuts and heater unit.

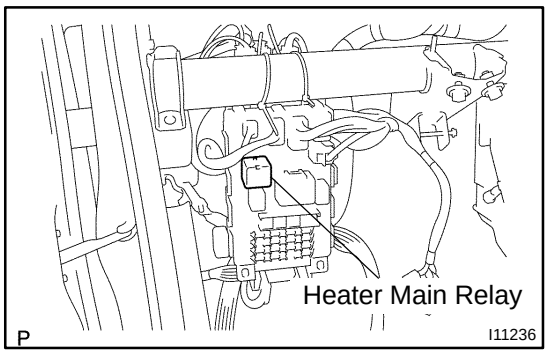

HEATER MAIN RELAY

AC230-05

INSPECTION

1. REMOVE INSTRUMENT PANEL (See page BO-76)
2. REMOVE HEATER MAIN RELAY FROM INSTRUMENT PANEL J / B

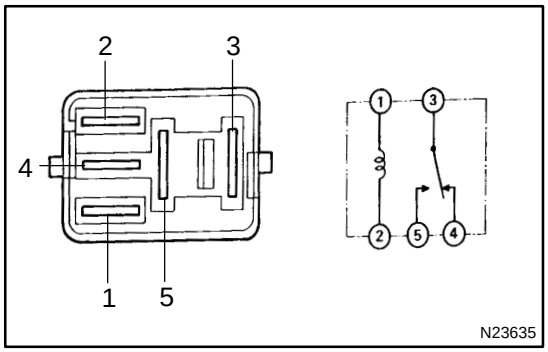

3. INSPECT HEATER MAIN RELAY CONTINUITY

Condition	Tester connection	Specified condition
Constant	1 - 2 3 - 4	Continuity
Apply B+ between terminals 1 and 2	3 - 5	Continuity

If continuity is not as specified, replace the relay.

4. INSTALL HEATER MAIN RELAY TO INSTRUMENT PANEL J / B
5. INSTALL INSTRUMENT PANEL (See page BO-84)

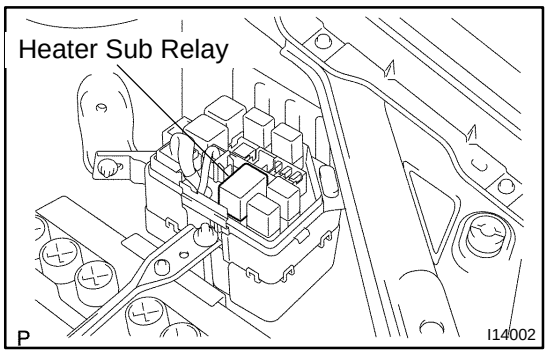

HEATER SUB RELAY

AC2K4-01

INSPECTION

1. REMOVE HEATER SUB RELAY FROM ENGINE ROOM RELAY BLOCK NO. 1

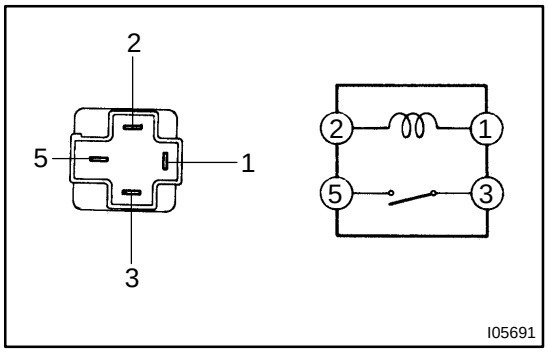

2. INSPECT HEATER SUB RELAY CONTINUITY

Condition	Tester connection	Specified condition
Constant	1 - 2	Continuity
Apply B+ between terminals 1 and 2	3 - 5	Continuity

If continuity is not as specified, replace the relay.

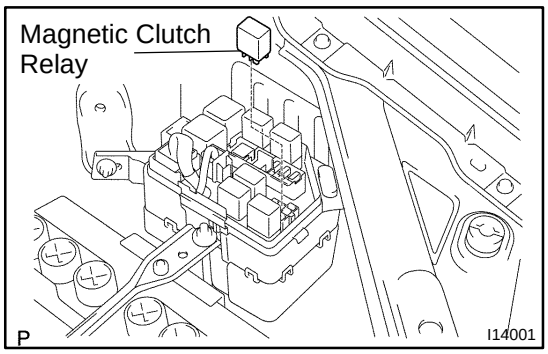

MAGNETIC CLUTCH RELAY

AC28T-03

INSPECTION

1. REMOVE MAGNETIC CLUTCH RELAY (Marking: A/C MG) FROM ENGINE ROOM RELAY BLOCK

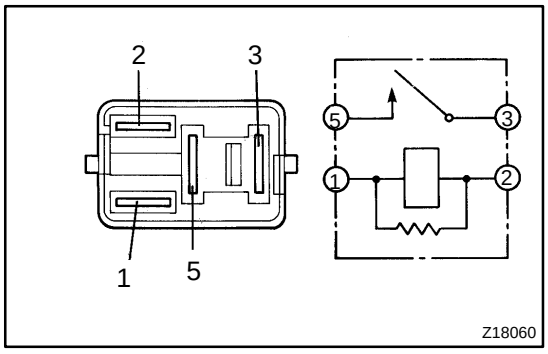

2. INSPECT MAGNETIC CLUTCH RELAY (Marking: A/C MG) CONTINUITY

Condition	Tester connection	Specified condition
Constant	1 - 2	Continuity
Apply B+ between terminals 1 and 2	3 - 5	Continuity

If continuity is not as specified, replace the relay.

3. INSTALL MAGNETIC CLUTCH RELAY TO ENGINE ROOM RELAY BLOCK

AC0CB-04

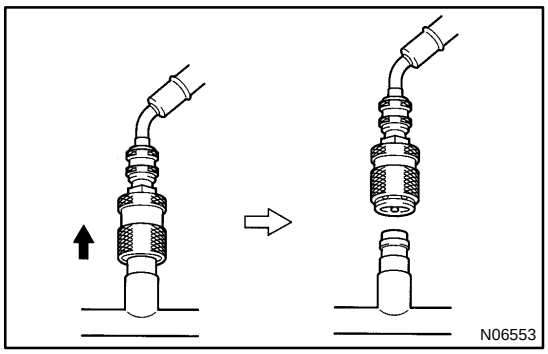

SET OFF

1. **CLOSE BOTH HAND VALVES OF MANIFOLD GAUGE SET**
2. **DISCONNECT QUICK DISCONNECT ADAPTERS FROM SERVICE VALVES ON REFRIGERANT LINE**

HINT:

Slide the sleeve of the quick disconnect adapter upward to unlock the adapter and remove it from the service valve.

3. **INSTALL CAPS TO SERVICE VALVES ON REFRIGERANT LINE**

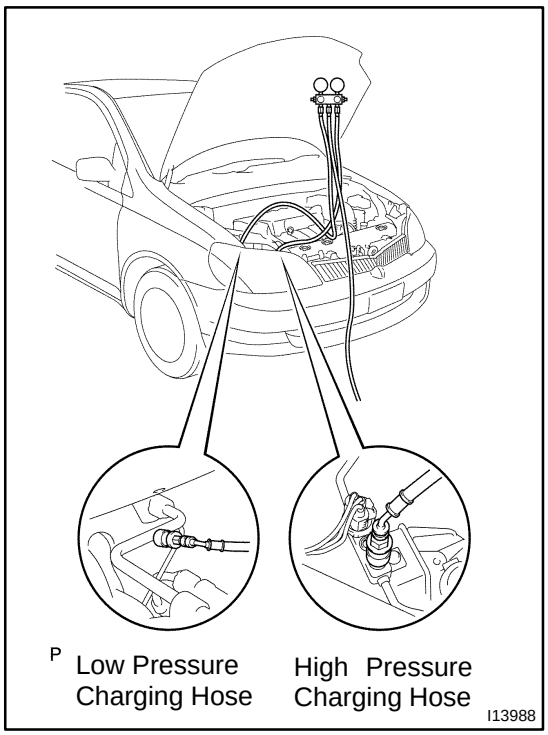

MANIFOLD GAUGE SET

AC2JW-01

SET ON

1. CONNECT CHARGE HOSE TO MANIFOLD GAUGE SET

Tighten the nuts by hand.

CAUTION:

Do not connect the wrong hoses.

2. CONNECT QUICK DISCONNECT ADAPTERS TO CHARGING HOSES

Tighten the nuts by hand.

3. CLOSE BOTH HAND VALVES OF MANIFOLD GAUGE SET

4. REMOVE CAPS FROM SERVICE VALVES ON REFRIGERANT LINE

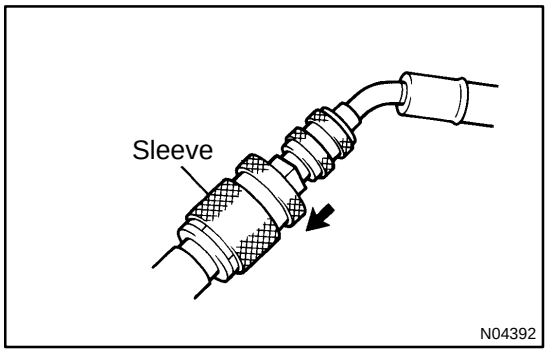

5. CONNECT QUICK DISCONNECT ADAPTERS TO SERVICE VALVES

HINT:

Push the quick disconnect adapter onto the service valve, then slide, then slide the sleeve of the quick disconnect adapter downward to lock it.

AC0E9-01

INSTALLATION

Installation is in the reverse order of remval (See page AC-62).

PRESSURE SWITCH

AC28R-03

ON-VEHICLE INSPECTION

1. START ENGINE
2. SET BLOWER SPEED CONTROL SWITCH TO "HI" POSITION
3. SET TEMPERATURE CONTROL SELECTOR TO "MAX COOL" POSITION
4. PUSH A/C SWITCH
5. RACE ENGINE AT 1,500 RPM
6. INSPECT PRESSURE SWITCH OPERATION

(a) Disconnect the connector.

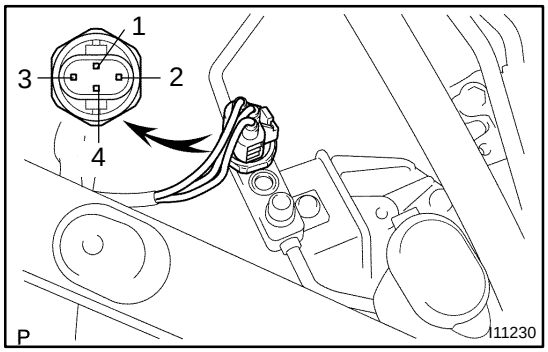

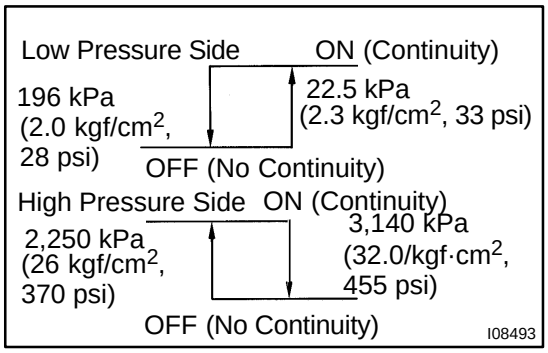

(b) Inspect pressure switch continuity (Magnetic Clutch Control).
  (1) Connect the positive (+) lead from the ohmmeter to terminal 4 and the negative (-) lead to terminal 1.
  (2) Check continuity between terminals when refrigerant pressure is changed, as shown in the illustration.

If continuity is not as specified, replace the pressure switch.

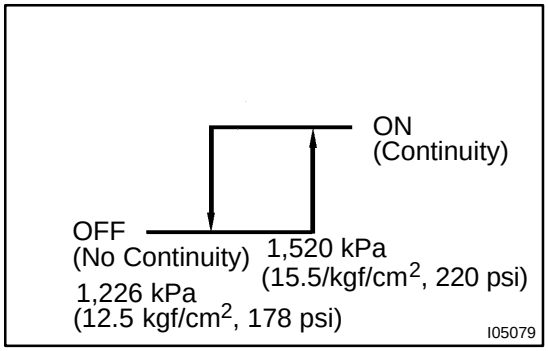

(c) Inspect pressure switch continuity (Condenser Fan Control).
  (1) Connect the positive (+) lead from the ohmmeter to terminal 2 and the negative (-) lead to terminal 3.
  (2) Check continuity between terminals when refrigerant pressure is changed, as shown in the illustration.

If operation is not as specified, replace the pressure switch.

AC0E8-06

REMOVAL

1. DISCHARGE REFRIGERANT FROM REFRIGERATION SYSTEM

HINT:

At the time of installation, please refer to the following item.

Evacuate air from refrigeration system.

Charge system with refrigerant and inspect for leakage of refrigerant.

Specified amount: 460 ± 30 g (16.23 ± 1.06 oz.)

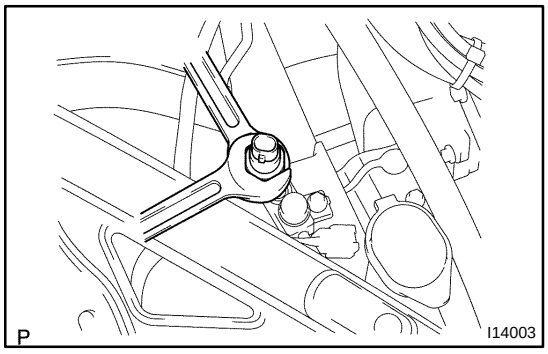

2. REMOVE PRESSURE SWITCH FROM LIQUID TUBE

Disconnect the connector and remove the pressure switch.

Torque: 10 N·m (100 kgf·cm, 7 ft·lbf)

HINT:

- Lock the switch mount on the tube with an open end wrench, being careful not to deform the tube, and remove the switch.
- At the time of installation, please refer to the following item.
  Lubricate a new O-ring with the compressor oil and install them to the switch.

AC282-03

COMPONENTS

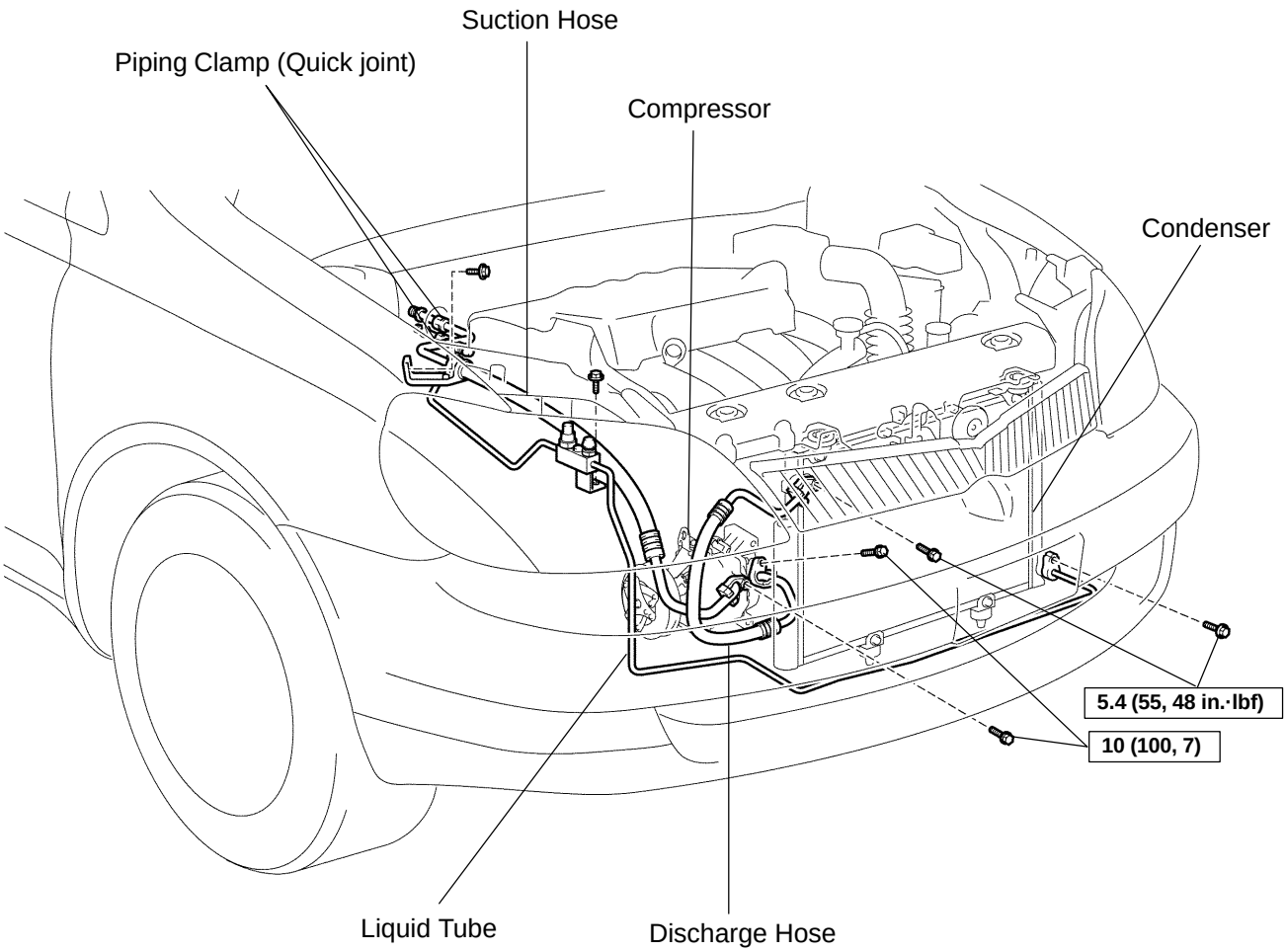

N·m (kgf·cm, ft·lbf) : Specified torque

P

I13987

REFRIGERANT LINE

AC0CC-01

ON-VEHICLE INSPECTION

1. INSPECTION HOSE AND TUBE CONNECTIONS FOR LOOSENESS

2. INSPECT HOSES AND TUBES FOR LEAKAGE

Using a gas leak detector, check for leakage of refrigerant.

AC0CE-05

REPLACEMENT

1. DISCHARGE REFRIGERANT FROM REFRIGERATION SYSTEM

2. REPLACE FAULTY TUBE OR HOSE

NOTICE:

Cap the open fittings immediately to keep moisture or dirt out of the system.

3. TIGHTEN JOINT OF BOLT OR NUT AT SPECIFIED TORQUE

NOTICE:

Connections should not be torqued tighter than the specified torque.

Part tightened	N·m	kgf·cm	ft·lbf
Compressor x Discharge hose	10	100	7
Compressor x Suction hose	10	100	7
Condenser x Discharge hose	5.4	55	48 in.·lbf
Condenser x Liquid tube	5.4	55	48 in.·lbf

4. EVACUATE AIR IN REFRIGERATION SYSTEM AND CHARGE SYSTEM WITH REFRIGERANT
Specified amount: 460 ± 30g (16.23 ± 1.06 oz.)

5. INSPECT FOR LEAKAGE OF REFRIGERANT

Using a gas leak detector, check for leakage of refrigerant.

6. INSPECT AIR CONDITIONING OPERATION

THERMISTOR

AC28Q-03

INSPECTION

1. REMOVE FRONT PASSENGER AIRBAG ASSEMBLY
(See page RS-28)

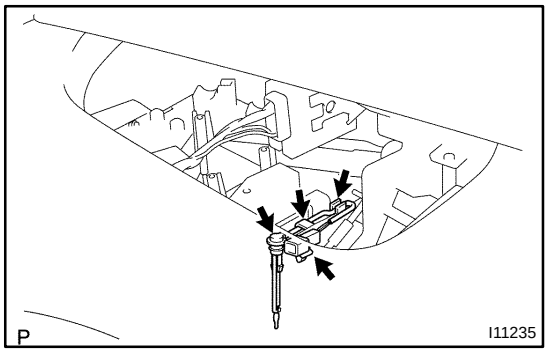

2. REMOVE THERMISTOR

(a) Disconnect the connector.
(b) Disconnect the wire harness clamps.
(c) Using a screwdriver, pull out the thermistor.

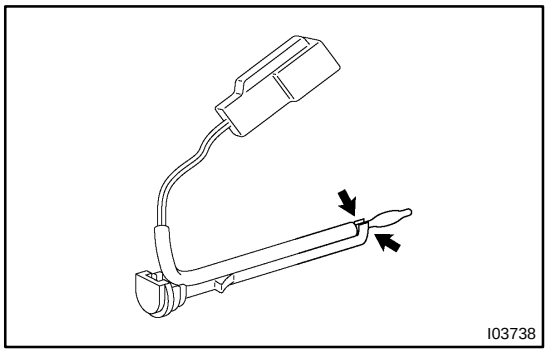

(d) Release the 2 claws and remove the thermistor from bracket plate.

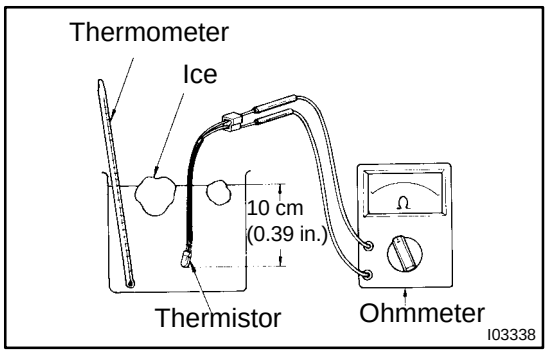

3. INSPECT THERMISTOR RESISTANCE

(a) Place the thermistor in cold water and while changing the temperature of the water, measure resistance at the connector and at the same time, measure temperature of the water with a thermometer.

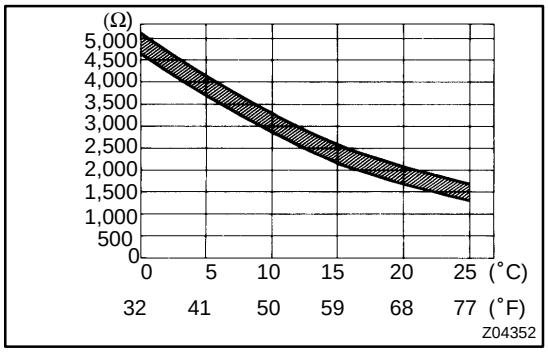

(b) Compare the 2 readings on the chart.

If resistance value is not as specified, replace the thermistor.

4. INSTALL THERMISTOR

(a) Install the thermistor to A/C unit.
(b) Connect the wire harness clamps.
(c) Connect the connector.

5. INSTALL FRONT PASSENGER AIRBAG
(See page RS-37)

TROUBLESHOOTING

AC27Y-03

PROBLEM SYMPTOMS TABLE

Use the table below to help you find the cause of the problem. The numbers indicate the priority of the likely cause of the problem. Check each part in order. If necessary, replace these parts.

Standard:

Symptom	Suspect Area	See page
No blower operation	4. HTR Fuse	-
	5. Heater main relay	AC-64
	6. Blower motor	AC-56
	7. Blower resistor	AC-58
	8. Blower speed control switch	AC-88
	9. Wire harness	-
No air temperature control	1. Engine coolant volume	-
	2. Heater control assembly	AC-78
No compressor operation	1. Refrigerant volume	AC-3
	2. A.C Fuse	-
	3. Magnetic clutch relay	AC-66
	4. Magnetic clutch	AC-42
	5. Compressor	AC-42
	6. Pressure switch	AC-61
	7. A/C switch	AC-88
	8. A/C amplifier	AC-75
	9. Thermistor	AC-60
	10.Wire harness	-
No cool air comes out	1. Refrigerant volume	AC-3
	2. Refrigerant pressure	AC-3
	3. Drive belt	AC-16
	4. Magnetic clutch	AC-42
	5. Compressor	AC-42
	6. Pressure switch	AC-61
	7. Thermistor	AC-60
	8. A/C switch	AC-88
	9. A/C amplifier	AC-75
	10.Heater control assembly	AC-78
	11.Wire harness	-
Insufficient cooling	1. Refrigerant volume	AC-3
	2. Drive belt	AC-16
	3. Magnetic clutch	AC-42
	4. Compressor	AC-42
	5. Condenser	AC-49
	6. Expansion valve	AC-54
	7. Evaporator	AC-31
	8. Refrigerant lines	AC-21
	9. Pressure switch	AC-61
	10.A/C amplifier	AC-75
	11.Heater control assembly	AC-78
No engine idle-up when A/C switch ON	1. A/C amplifier	AC-75
	2. Engine (and ECT) ECU	-
	3. Wire harness	-
No air inlet control	Heater control assembly	AC-78
No mode control	Heater control assembly	AC-78

Symptom	Suspect Area	See page
No condenser fan operation	1. ECU - IG Fuse 2. RDI Fuse 3. Fan No. 1 relay 4. Water temperature switch 5. Fan motor 6. A/C amplifier 7. Engine (and ECT) ECU 8. Wire harness	- - AC-67 AC-90 AC-68 AC-75 - -
No condenser fan speed change	1. Fan No. 2 relay 2. Pressure switch 3. Condenser fan resistor 4. A/C amplifier 5. Wire harness	AC-67 AC-61 AC-74 AC-75 -

Two way flow heater:

Symptom	Suspect Area	See page
No blower operation	1. GAUGE Fuse 2. HTR Fuse 3. Heater main relay 4. Blower motor 5. Blower resistor 6. Blower speed control switch 7. Wire harness	- - AC-64 AC-56 AC-58 AC-88 -
No air inlet control	1. ECU - IG Fuse 2. Air inlet servomotor 3. Heater switch (Heater control assembly) 4. PTC amplifier 5. Wire harness	- AC-59 AC-82 AC-75 -
Air inlet door does not operate on the two way flow position, when perform in these conditions: • Air inlet selector: FRESH • Blower switch: ON • Temperature control selector: MAX. WARM • Mode selector: FOOT or FOOT/DEF.	1. A/C Fuse 2. Micro switch (for MAX. WARM) 3. Micro switch (for FOOT, FOOT/DEF.) 4. Heater switch (Heater control assembly) 5. PTC amplifier 6. Air inlet servomotor 7. Wire harness	- AC-39 AC-39 AC-82 AC-75 AC-59 -

PTC heater:

Symptom	Suspect Area	See page
PTC heater does not operate, when perform in these conditions: • Engine coolant temp.: 60 ˚C (140 ˚F) or below • Engine speed: 650 rpm or above • Temperature control selector: MAX. COOL	1. A/C Fuse 2. Micro switch (for MAX. WARM) 3. Micro switch (for FOOT, FOOT/DEF.) 4. Heater switch (Heater control assembly) 5. PTC heater (Heater radiator) 6. PTC amplifier 7. Air inlet servomotor 8. Wire harness	- AC-39 AC-39 AC-82 AC-39 AC-75 AC-59 -

WATER TEMPERATURE SWITCH

AC29G-03

INSPECTION

1. DRAIN ENGINE COOLANT FROM RADIATOR

HINT:

It is not necessary to drain out out all the coolant.

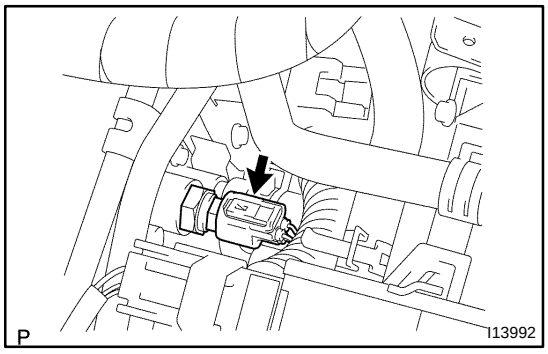

2. REMOVE WATER TEMPERATURE SWITCH

(a) Disconnect the connector.

(b) Remove the water temperature switch.

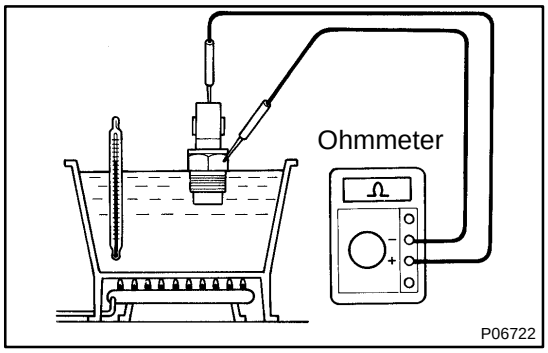

3. INSPECT SWITCH CONTINUITY

(a) Using an ohmmeter, check that no continuity exists between the terminal and switch body when the coolant temperature is above 83 ˚C (181 ˚F).

If continuity exists, replace the switch.

(b) Using an ohmmeter, check that continuity exists between the terminals when the coolant temperature is below 90 ˚C (194 ˚F).

If no continuity exists, replace the switch.

4. INSTALL WATER TEMPERATURE SWITCH

(a) Install the water temperature switch.

Torque: 34 N·m (350 kgf·cm, 25 ft·lbf)

(b) Connect the connector.

5. FILL WITH ENGINE COOLANT

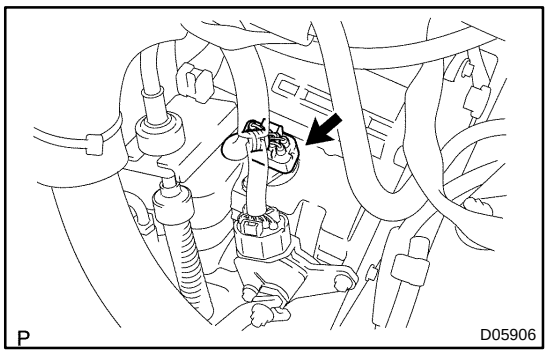

ATF TEMPERATURE SENSOR

AX0M0-02

ON-VEHICLE REPAIR

1. DISCONNECT SOLENOID CONNECTOR

2. REMOVE LH ENGINE UNDER COVER

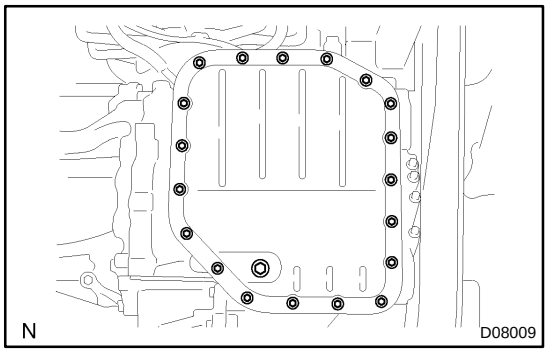

3. REMOVE DRAIN PLUG AND DRAIN ATF

4. REMOVE OIL PAN AND GASKET

NOTICE:

Some fluid will remain in the oil pan.

Remove the 19 bolts, and carefully remove the oil pan assembly. Discard the gasket.

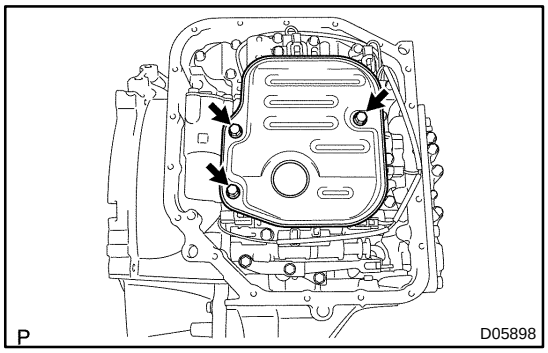

5. REMOVE OIL STRAINER

(a) Remove the 3 bolts and oil strainer.

(b) Remove the O-ring.

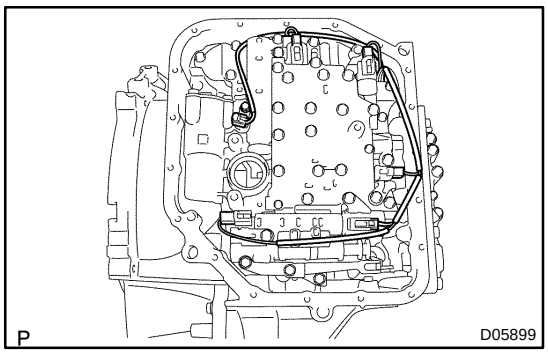

6. DISCONNECT 5 SHIFT SOLENOID VALVE CONNECTORS

7. REMOVE ATF TEMPERATURE SENSOR

(a) Remove the bolt and lock plate, and remove the ATF temperature sensor.

(b) Remove the O-ring from the ATF temperature sensor.

8. INSTALL ATF TEMPERATURE SENSOR

(a) Coat a new O-ring with ATF and it to the direct clutch speed sensor.

(b) Install the ATF temperature sensor with the lock plate and bolt.

Torque: 11 N·m (110 kgf·cm, 8 ft·lbf)

9. CONNECT 5 SHIFT SOLENOID VALVE CONNECTORS

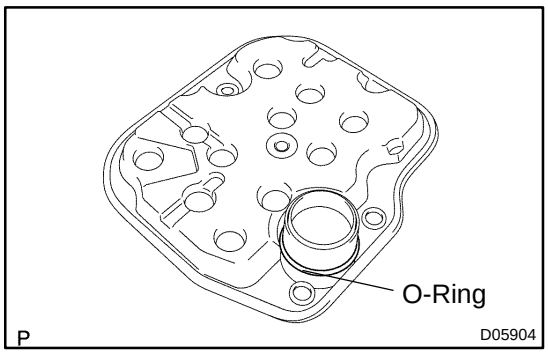

10. INSTALL OIL STRAINER

(a) Coat a new O-ring with ATF.

(b) Install the O-ring to the oil strainer.

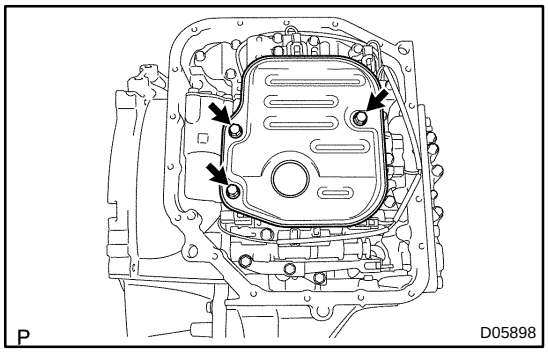

(c) Install the oil strainer with the 3 bolts.
Torque: 11 N·m (110 kgf·cm, 8 ft·lbf)

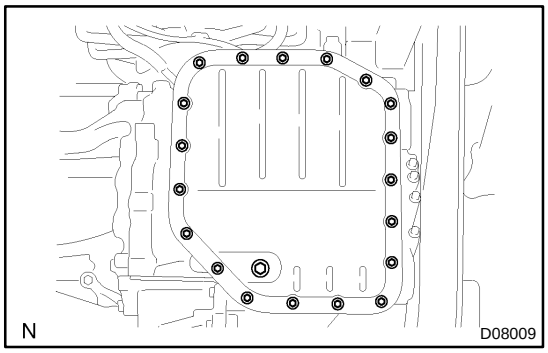

11. INSTALL OIL PAN

Install the oil pan and a new gasket with the 19 bolts.
Torque: 7.8 N·m (80 kgf·cm, 69 in.·lbf)

12. INSTALL DRAIN PLUG

Install a new gasket and drain plug.
Torque: 49 N·m (500 kgf·cm, 36 ft·lbf)

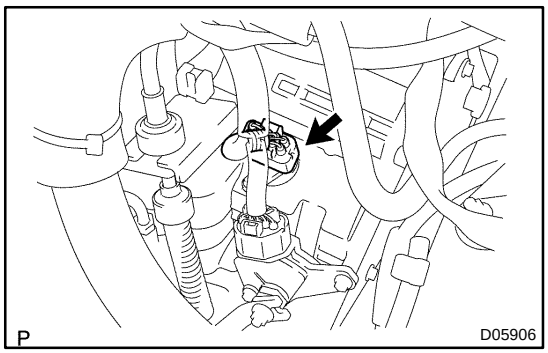

13. CONNECT SOLENOID CONNECTOR

14. FILL ATF AND CHECK ATF LEVEL
(See page DI-149)

15. INSTALL LH ENGINE UNDER COVER

AX0CZ-05

OPERATION

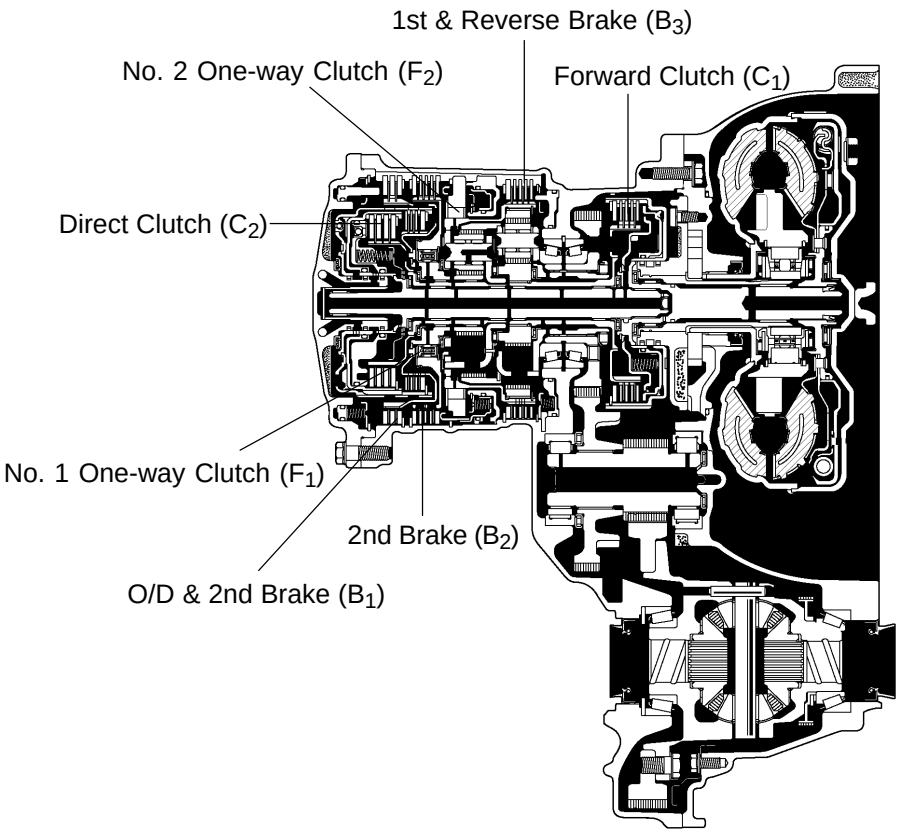

Y D09029

Shift Lever Range	Gear Position	C_1	C_2	C_3	B_1	B_2	B_3	F_1	F_2
P	Parking								
R	Reverse			○			○		
N	Neutral								
D	1st	○							○
	2nd	○				○		○	
	3rd	○	○			○			
	O/D		○		○	○			
2	1st	○							○
	2nd	○			○	○		○	
L	1st	○					○		○

○ : Operating

AUTOMATIC TRANSAXLE SYSTEM

AX03L-05

PRECAUTION

If the vehicle is equipped with a mobile communication system, refer to the precautions in the IN section.

AUTOMATIC TRANSAXLE UNIT

AX0MF-02

COMPONENTS

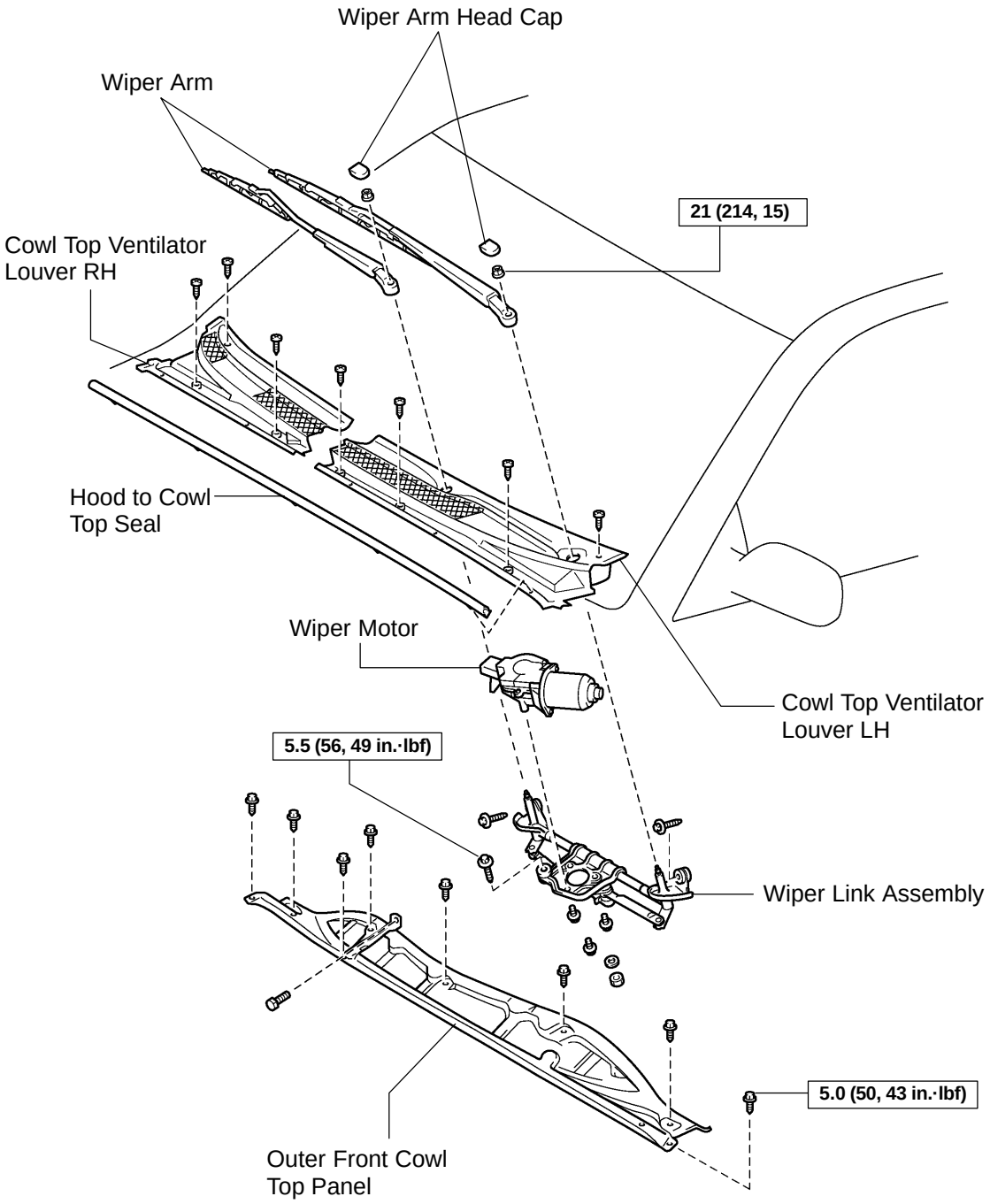

H10779

T N·m (kgf·cm, ft·lbf) : Specified torque

D08549

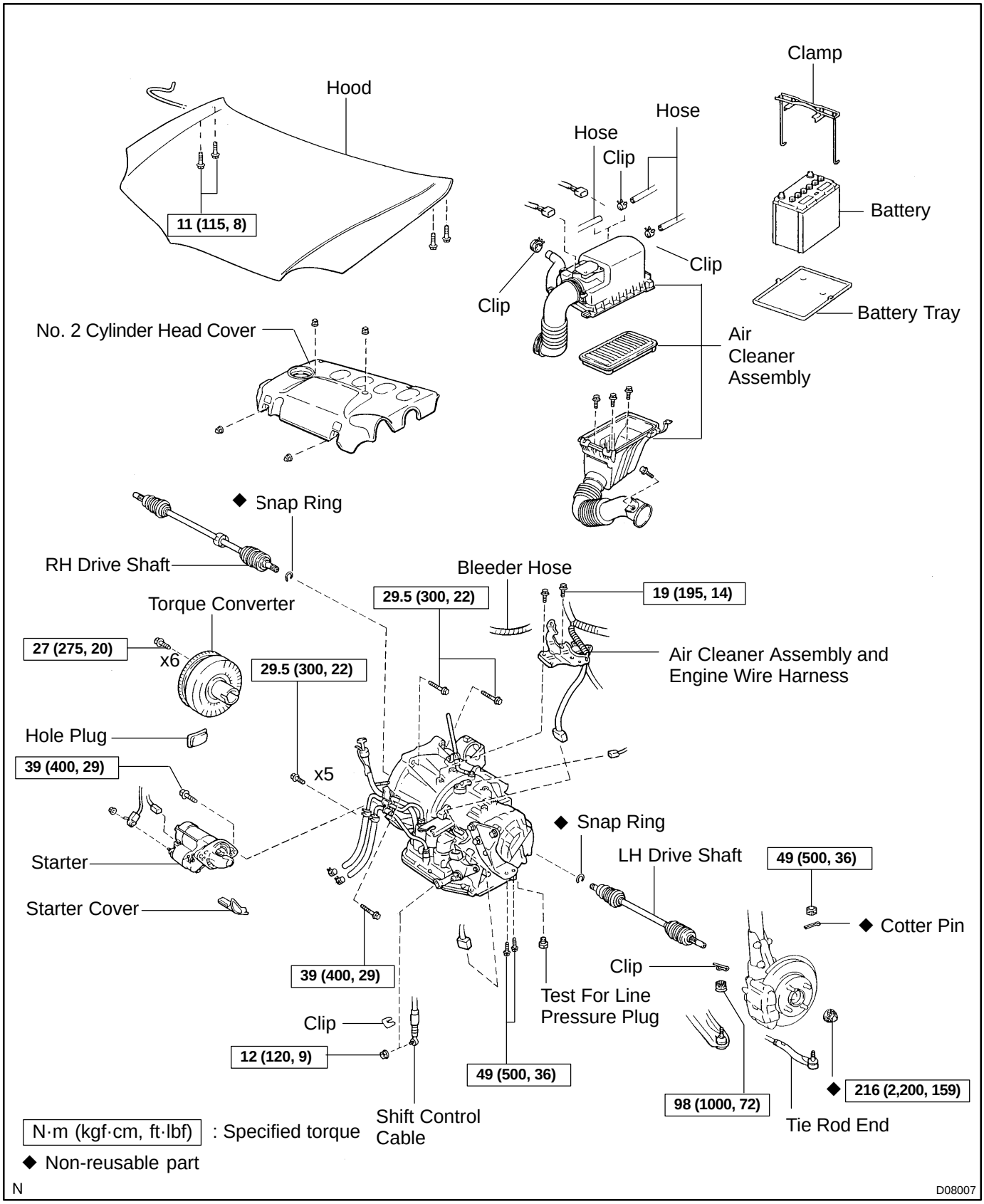
Clamp
Hood
Hose
Hose
Clip
11 (115, 8)
Battery
Clip
Clip
Battery Tray
No. 2 Cylinder Head Cover
Air
Cleaner
Assembly
◆ Snap Ring
RH Drive Shaft
Bleeder Hose
29.5 (300, 22)
19 (195, 14)
Torque Converter
27 (275, 20)
x6
29.5 (300, 22)
Air Cleaner Assembly and
Engine Wire Harness
Hole Plug
39 (400, 29)
x5
◆ Snap Ring
Starter
LH Drive Shaft
49 (500, 36)
Starter Cover
◆ Cotter Pin
39 (400, 29)
Clip
Test For Line
Pressure Plug
Clip
12 (120, 9)
49 (500, 36)
98 (1000, 72)
◆ 216 (2,200, 159)
Shift Control
Cable
Tie Rod End
N·m (kgf·cm, ft·lbf) : Specified torque
◆ Non-reusable part
N
D08007

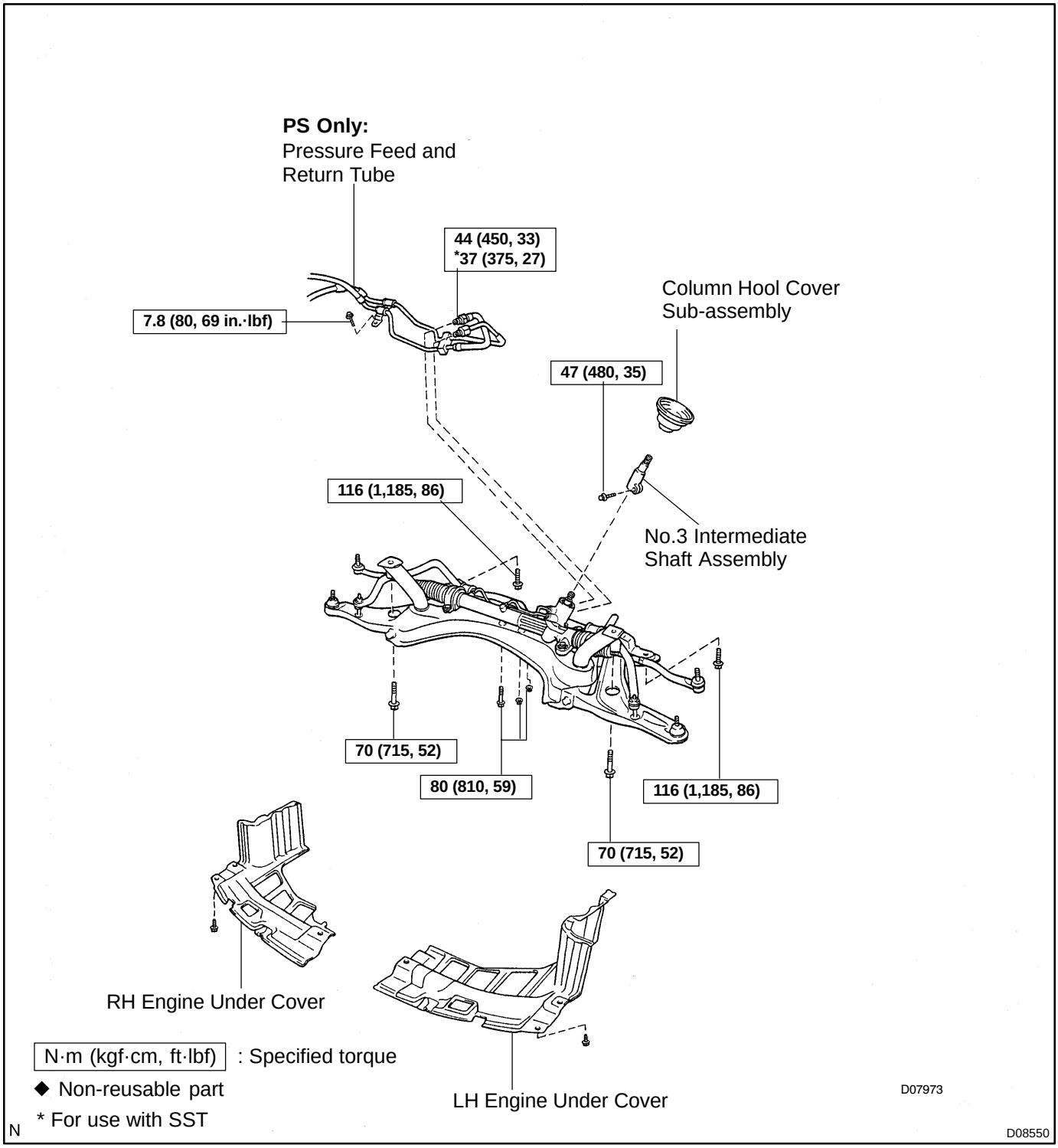
PS Only:
Pressure Feed and
Return Tube
44 (450, 33)
*37 (375, 27)
7.8 (80, 69 in.·lbf)
Column Hool Cover
Sub-assembly
47 (480, 35)
116 (1,185, 86)
No.3 Intermediate
Shaft Assembly
70 (715, 52)
80 (810, 59)
116 (1,185, 86)
70 (715, 52)
RH Engine Under Cover
LH Engine Under Cover
N·m (kgf·cm, ft·lbf) : Specified torque
◆ Non-reusable part
* For use with SST
D07973
N
D08550

AX03Z-10

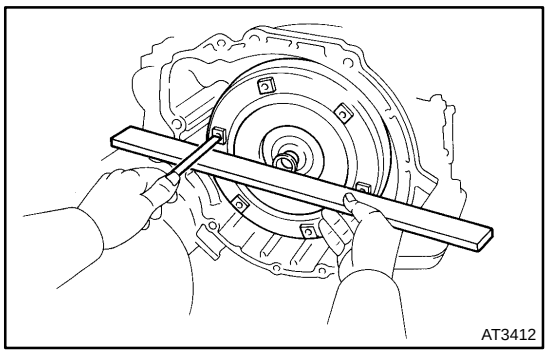

INSTALLATION

1. CHECK TORQUE CONVERTER CLUTCH INSTALLATION

Using calipers and a straight edge, measure the distance from the installed surfaced of the transaxle housing to the torque converter clutch.

Correct distance: 9.3 mm (0.366 in.)

2. TRANSAXLE INSTALLATION

Installation is in the reverse order of removal (See page AX-29).

HINT:

- After installation, adjust the park/neutral position switch (See page DI-149).
- Fill ATF and check fluid level (See page DI-149).
- Do test to drive the vehicle (See page DI-149).

AX0M3-02

REMOVAL

1. REMOVE ENGINE HOOD
Torque: 11 N·m (115 kgf·cm, 8 ft·lbf)

2. REMOVE BATTERY

3. REMOVE FRONT WIPER, COWL TOP VENTILATOR LOUVER LH AND RH, AND OUTER FRONT COWL TOP PANEL

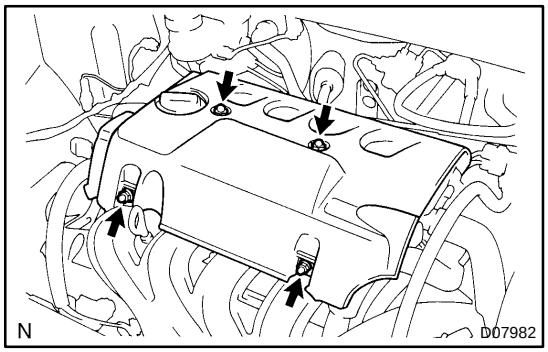

4. REMOVE NO. 2 CYLINDER HEAD COVER
Remove the 4 nuts and No. 2 cylinder head cover.

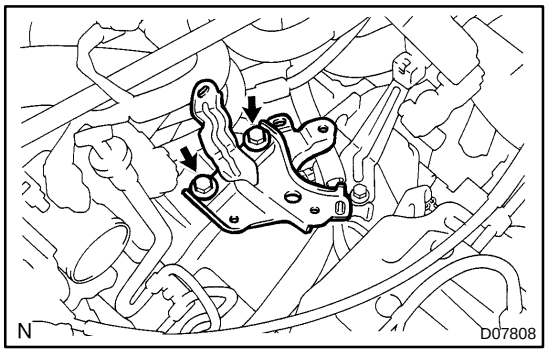

5. REMOVE AIR CLEANER BRACKET
Remove the 2 bolts, air cleaner bracket and throttle cable clamp.
Torque: 19 N·m (195 kgf·cm, 14 ft·lbf)

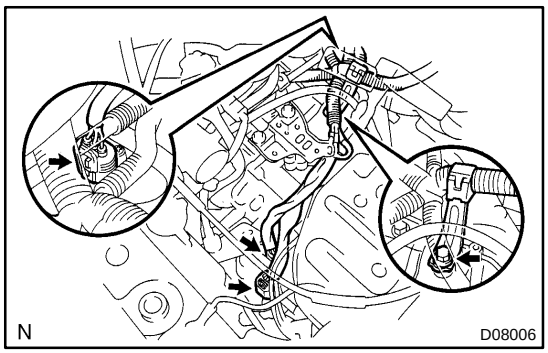

6. SEPARATE ENGINE WIRE HARNESS FROM TRANSAXLE
Remove the bolt and engine wire harness bracket.

7. DISCONNECT PARK/NEUTRAL POSITION SWITCH, SOLENOID WIRE, DIRECT CLUTCH SPEED SENSOR CONNECTOR

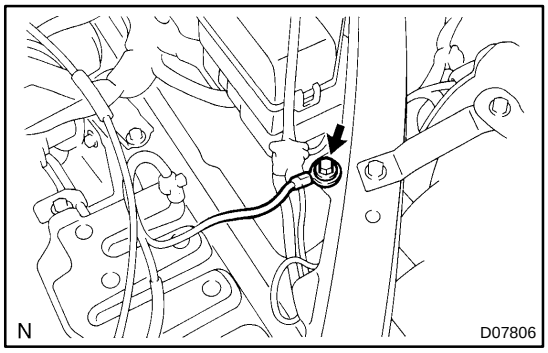

8. DISCONNECT GROUND TERMINAL
Remove the bolt and ground terminal.

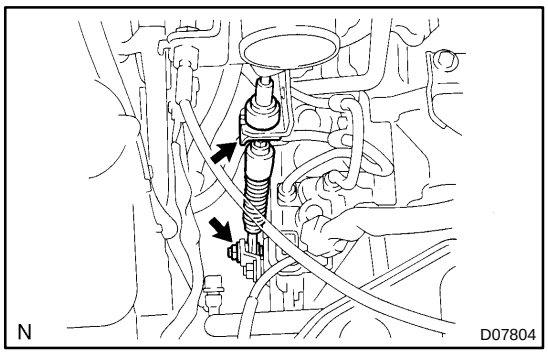

9. DISCONNECT SHIFT CONTROL CABLE FROM BRACKET AND CONTROL SHAFT LEVER

(a) Remove the nut and disconnect the shift control cable from the control shaft lever.

(b) Remove the clip and disconnect the shift control cable from the bracket.

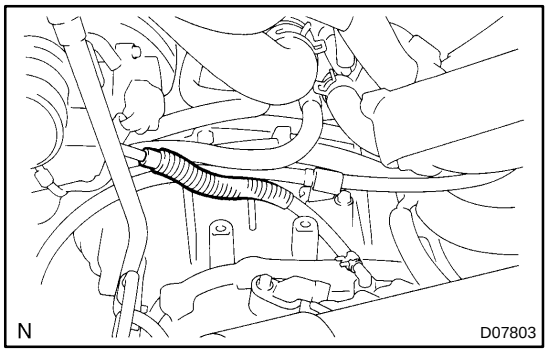

10. DISCONNECT HOSE FROM FILLER PIPE

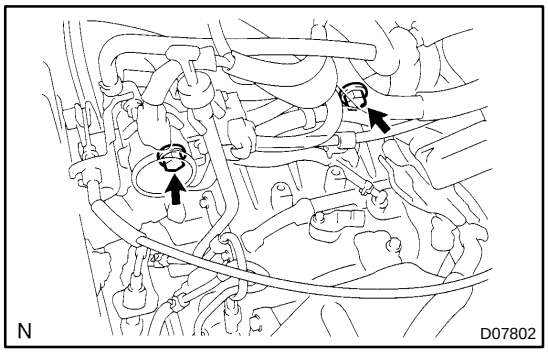

11. REMOVE 2 TRANSAXLE TO ENGINE UPPER SIDE BOLTS

Torque: 29.5 N·m (300 kgf·cm, 22 ft·lbf)

12. REMOVE STARTER UPPER SIDE BOLT

Torque: 39 N·m (400 kgf·cm, 29 ft·lbf)

13. RAISE VEHICLE

14. REMOVE LH AND RH ENGINE UNDER COVER

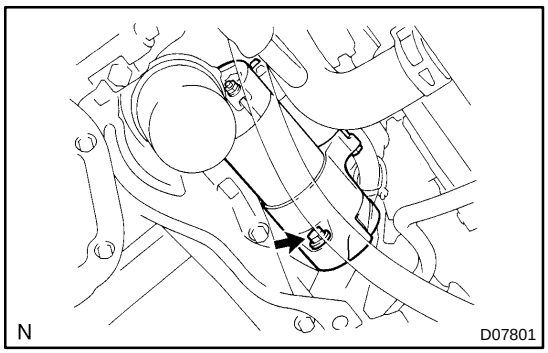

15. REMOVE STARTER

(a) Remove the nut and disconnect the starter wire.

(b) Disconnect the connector.

(c) Remove the bolt and starter.

(d) Remove the starter cover.

Torque: 39 N·m (400 kgf·cm, 29 ft·lbf)

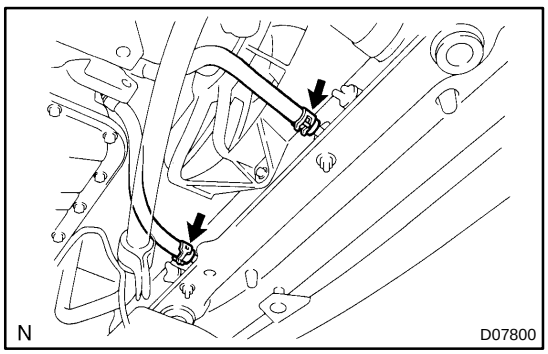

16. REMOVE OIL COOLER HOSE

Loosen the 2 clips and disconnect the 2 oil cooler hoses.

17. REMOVE LH AND RH DRIVE SHAFTS

(See page SA-18)

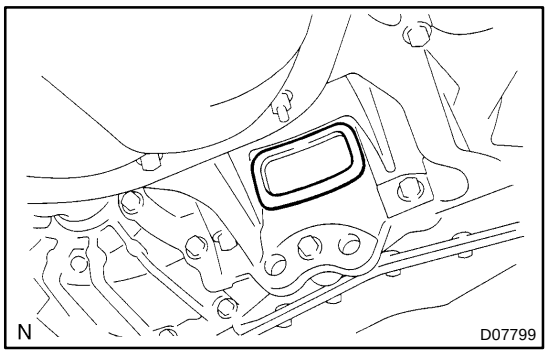

18. REMOVE HOLE PLUG

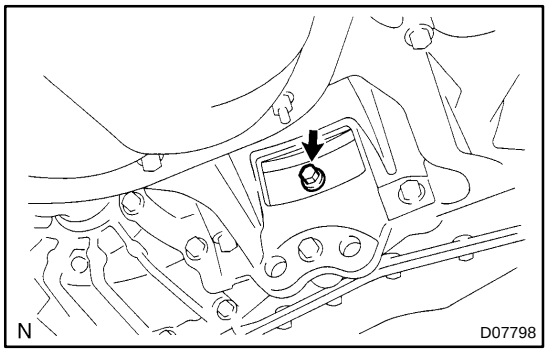

19. REMOVE TORQUE CONVERTER MOUNTING BOLT

Turn the crankshaft to gain access and remove the 6 bolts while holding the crankshaft pulley bolt with a wrench.

Torque: 27 N·m (275 kgf·cm, 20 ft·lbf)

HINT:

At the time of installation, please refer to the following item. First install gray colored bolt and then the 5 bolts.

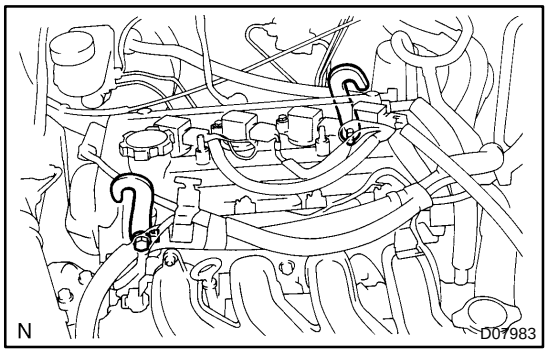

20. ATTACH ENGINE SLING DEVICE TO ENGINE HANGERS

(a) Install the 2 No. 1 engine hangers with the bolt in the correct direction.

Parts No.:
No. 1 engine hanger: 12281-21010
Bolt: 91511-60818
Torque: 40 N·m (400 kgf·cm, 29 ft·lbf)

(b) Attach the engine chain hoist to the engine hangers.

CAUTION:
Do not attempt to hang the engine by hooking the chain to any other part.

21. REMOVE FRONT SUSPENSION MEMBER REINFORCEMENT

Remove the 4 bolts and LH and RH front suspension member reinforcement.

Torque: 47 N·m (480 kgf·cm, 35 ft·lbf)

22. REMOVE FRONT SUSPENSION MEMBER WITH LOWER SUSPENSION ARM, STEERING GEAR ASSEMBLY AND STABILIZER BAR (MS: See page SR-35 , PS: See page SR-48)

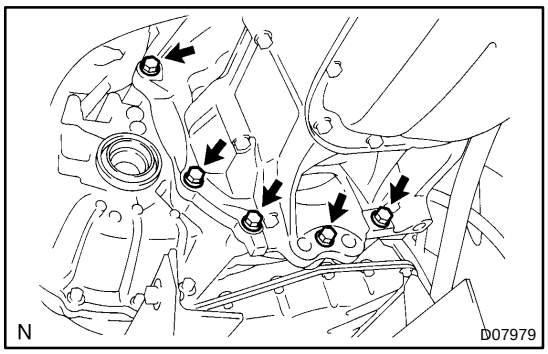

23. REMOVE TRANSAXLE

(a) Remove the 5 bolts.
Torque: 29.5 N·m (300 kgf·cm, 22 ft·lbf)

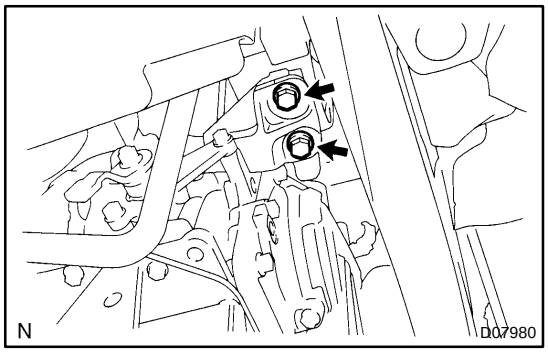

(b) Remove the 2 bolts, and disconnect the LH engine mounting.
Torque: 49 N·m (500 kgf·cm, 36 ft·lbf)

(c) Separate and remove the transaxle.

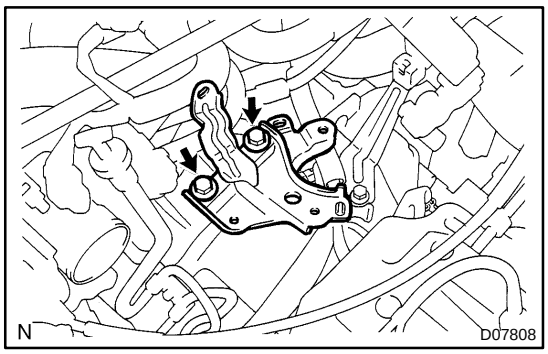

DIRECT CLUTCH SPEED SENSOR

AX0LZ-01

ON-VEHICLE REPAIR

1. REMOVE AIR CLEANER ASSEMBLY

2. REMOVE AIR CLEANER ASSEMBLY BRACKET

Remove the 2 bolts and bracket and shift control cable clamp.

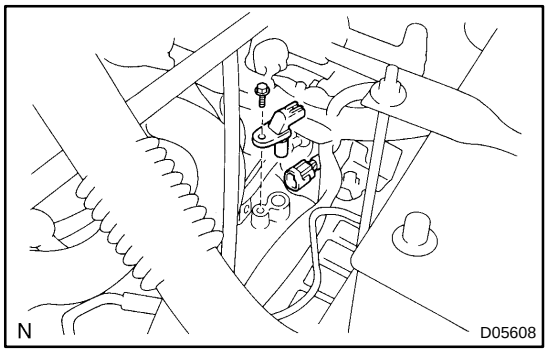

3. REMOVE DIRECT CLUTCH SPEED SENSOR

(a) Disconnect the connector.

(b) Remove the bolt and direct clutch speed sensor.

(c) Remove the O-ring from the direct clutch speed sensor.

4. INSTALL DIRECT CLUTCH SPEED SENSOR

(a) Coat a new O-ring with ATF and install it to the direct clutch speed sensor.

(b) Install the direct clutch speed sensor with the bolt.

Torque: 5.4 N·m (55 kgf·cm, 48 in.·lbf)

(c) Connect the connector.

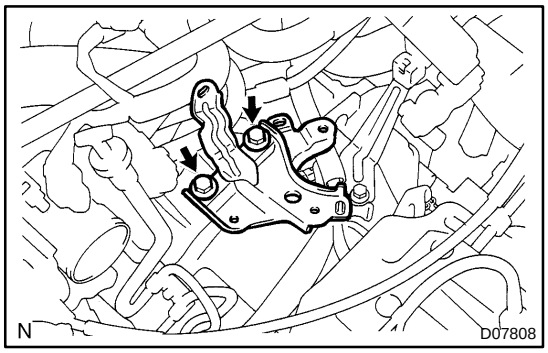

5. INSTALL AIR CLEANER BRACKET

Install the bracket with the 2 bolts.

Torque: 19 N·m (195 kgf·cm, 14 ft·lbf)

6. INSTALL AIR CLEANER ASSEMBLY AND SHIFT CONTROL CABLE CLAMP

DIFFERENTIAL OIL SEAL

AX0M2-02

ON-VEHICLE REPAIR

1. REMOVE FRONT DRIVE SHAFT (See page SA-18)

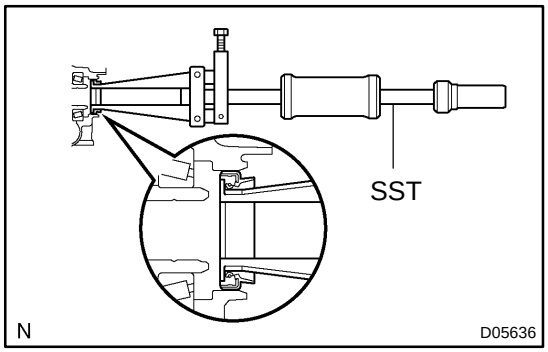

2. REMOVE SIDE GEAR SHAFT OIL SEAL

Using SST, pull out the oil seal.

SST 09308-00010

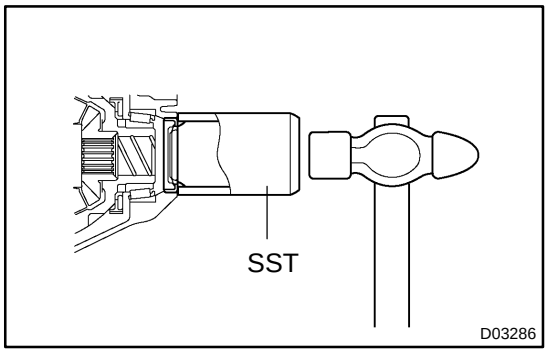

3. INSTALL LH AND RH SIDE GEAR SHAFT OIL SEAL

(a) Using SST and a hammer, drive in a new oil seal.

SST 09223-00010

Oil seal depth:

RH: 2.0 ± 0.5 mm (0.079 ± 0.02 in.)

LH: 5.9 ± 0.5 mm (0.232 ± 0.02 in.)

(b) Coat the lip of the oil seal with MP grease.

4. INSTALL FRONT DRIVE SHAFT (See page SA-18)

5. CHECK ATF LEVEL (See page DI-149)

FLOOR SHIFT ASSEMBLY

COMPONENTS

AX0D5-03

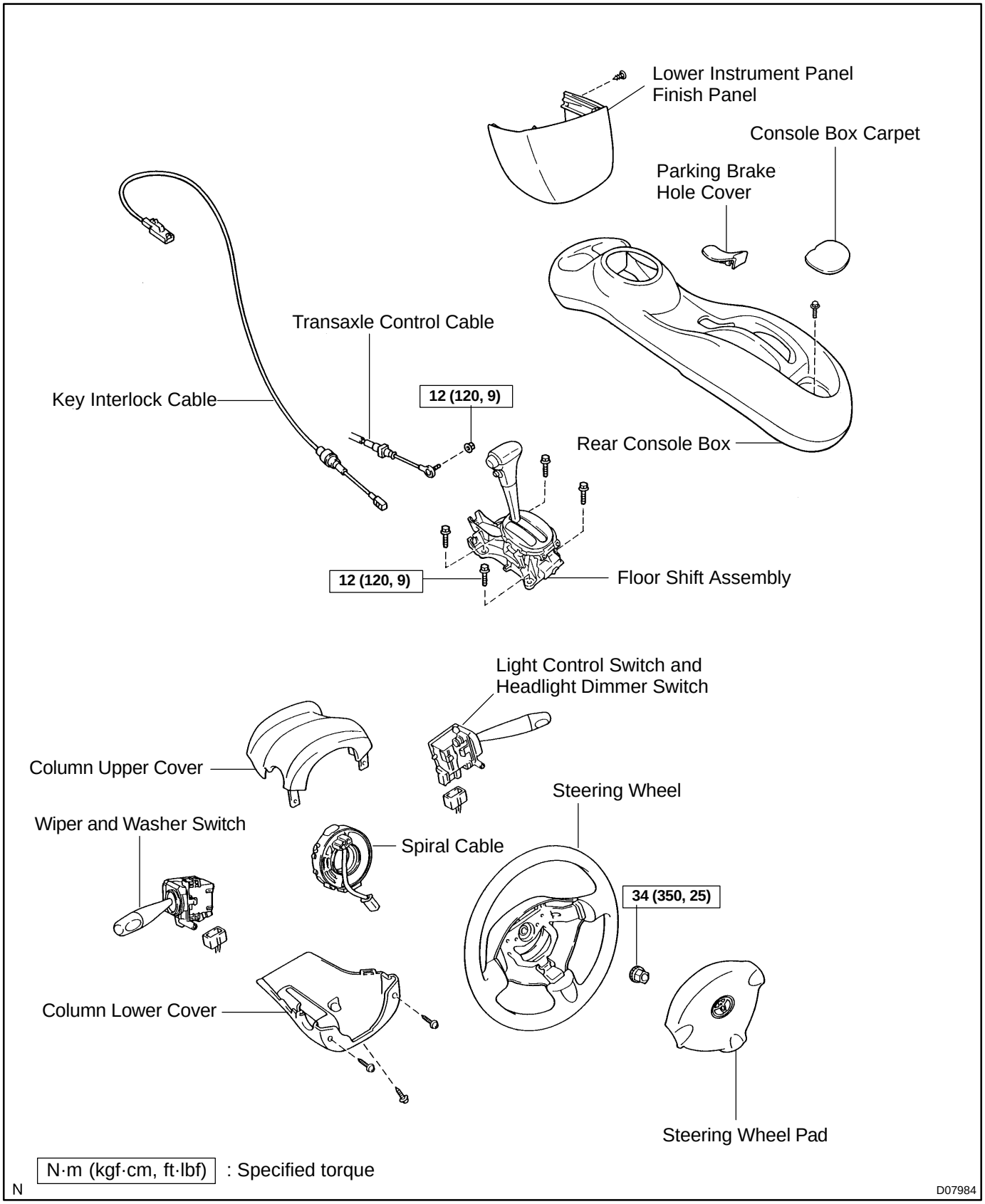

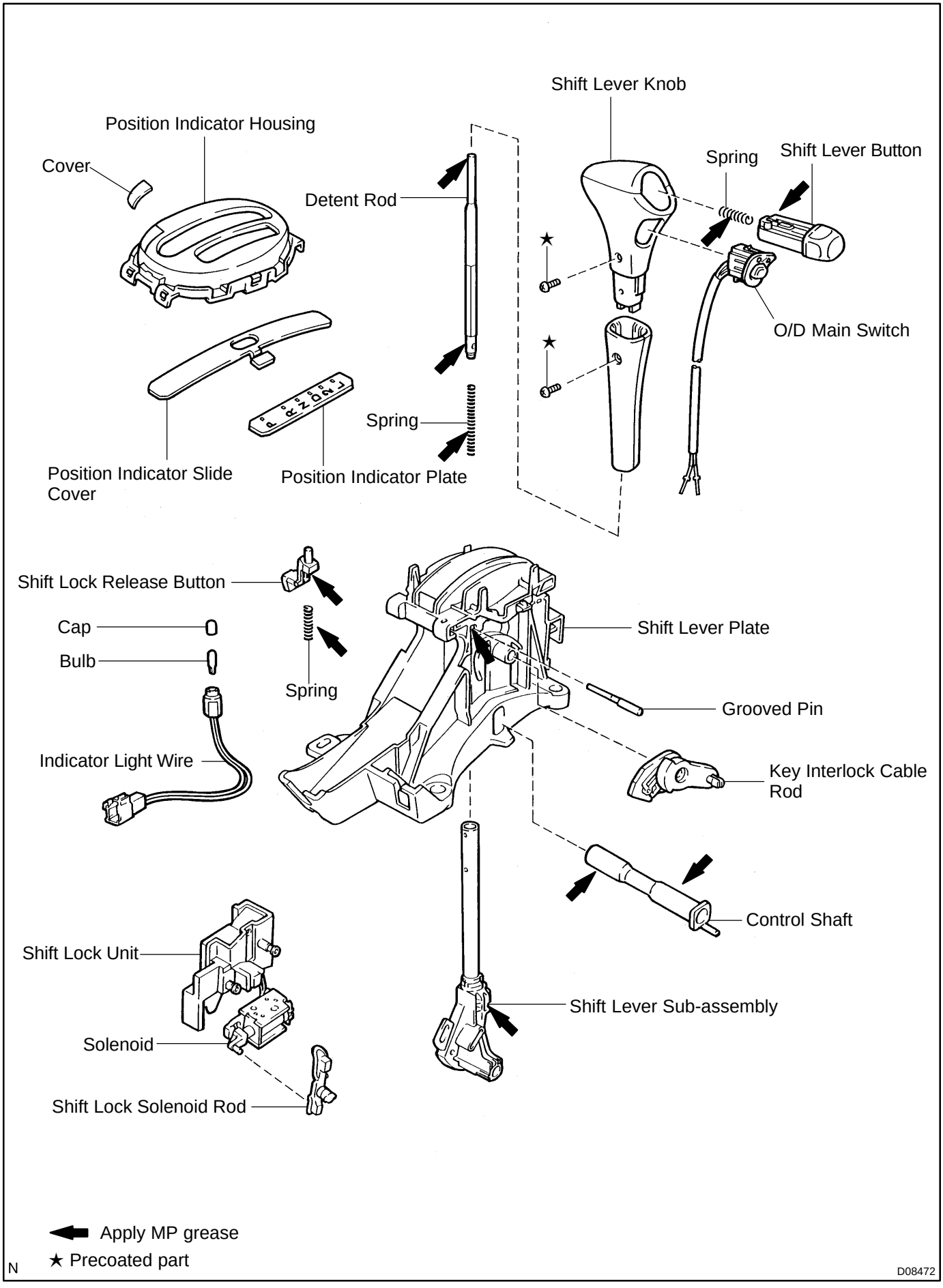
Shift Lever Knob
Position Indicator Housing
Cover
Detent Rod
Spring
Shift Lever Button
O/D Main Switch
Spring
Position Indicator Slide Cover
Position Indicator Plate
Shift Lock Release Button
Cap
Bulb
Spring
Shift Lever Plate
Grooved Pin
Indicator Light Wire
Key Interlock Cable Rod
Control Shaft
Shift Lock Unit
Shift Lever Sub-assembly
Solenoid
Shift Lock Solenoid Rod
Apply MP grease
★ Precoated part
N
D08472

AX0MD-01

DISASSEMBLY

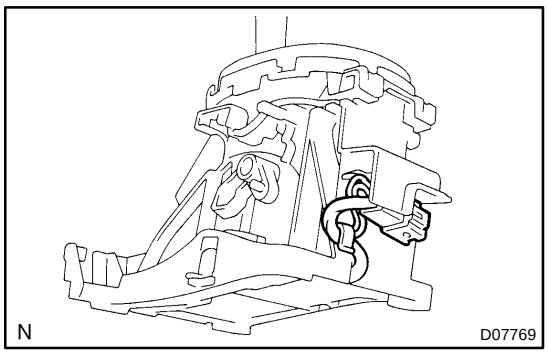

1. REMOVE O/D MAIN SWITCH TERMINAL

(a) Remove the connector from the shift lever plate.

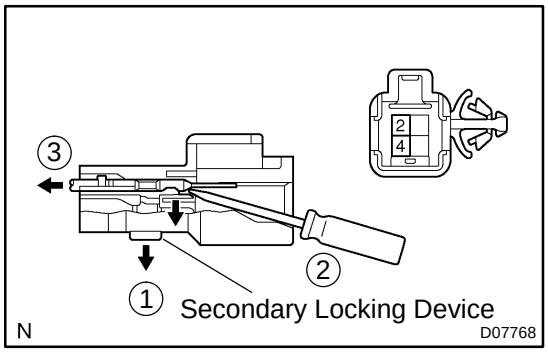

(b) Remove the O/D main switch connector from the shift lever plate.
(c) Disengage the secondary locking device.
(d) Release the locking lug of the terminals 2 and 4, and pull the terminals out from the rearward.

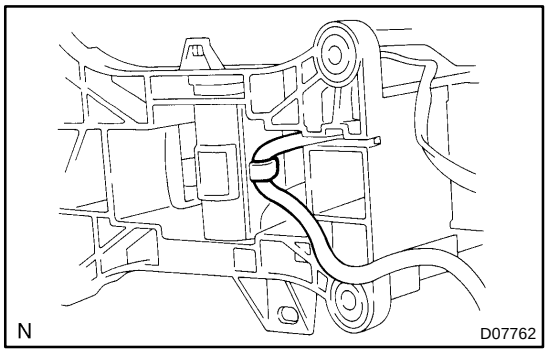

2. REMOVE SHIFT LEVER KNOB SUB-ASSEMBLY

(a) Remove the wire harness of the O/D main switch from the shift lever plate.

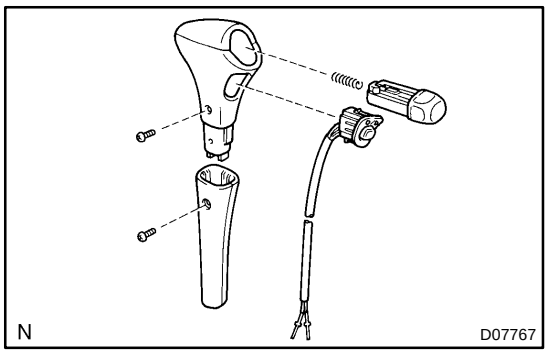

(b) Remove the 2 screws and shift lever knob sub-assembly.

NOTICE:

Pay attention not to apply unnatural load to O/D main switch wire harness.

(c) Remove the shift lever knob cover.
(d) Remove the shift lever button and spring.
(e) Remove the O/D main switch.

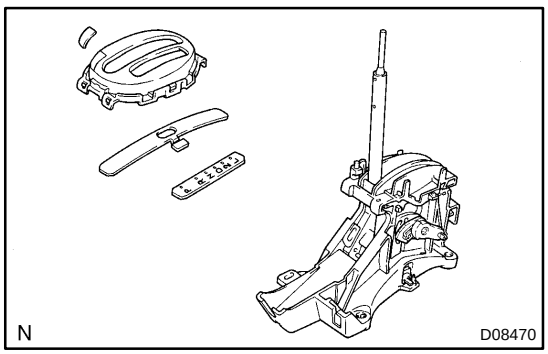

3. REMOVE POSITION INDICATOR HOUSING

(a) Remove the position indicator housing from the shift lever plate.
(b) Remove the cover from the position indicator housing.
(c) Remove the position indicator slide cover from the shift lever plate.
(d) Remove the position indicator plate from the position indicator housing.

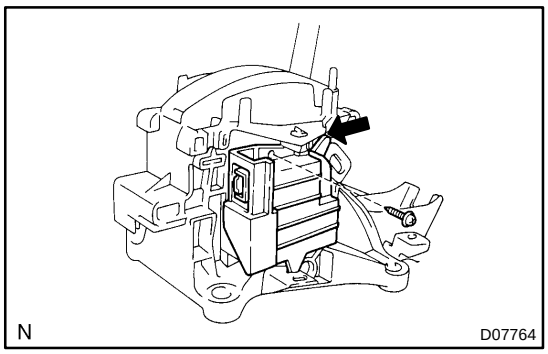

4. REMOVE SHIFT LOCK UNIT

(a) Remove the screw and shift lock unit.

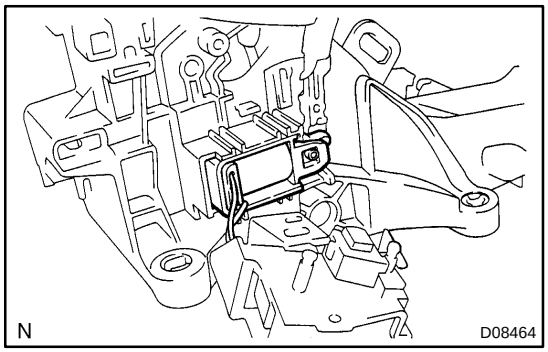

(b) Remove the solenoid from the shift lever plate.

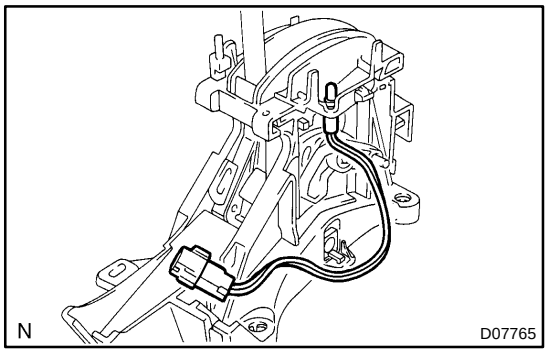

5. REMOVE INDICATOR LIGHT WIRE

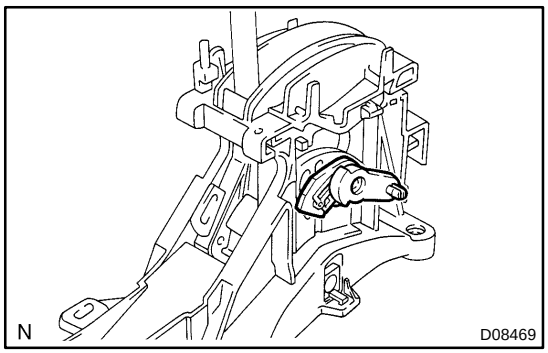

6. REMOVE KEY INTERLOCK CABLE ROD

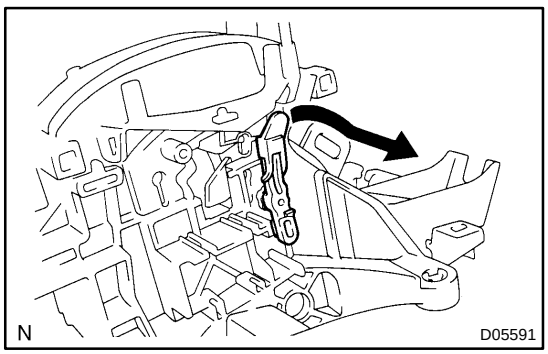

7. REMOVE SHIFT LOCK SOLENOID ROD

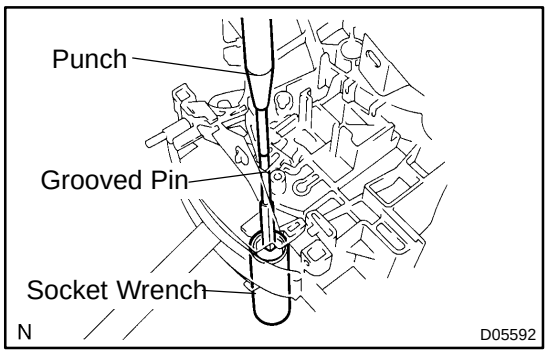

8. REMOVE SHIFT LEVER SUB-ASSEMBLY

(a) Set a 14 mm deep socket wrench.

(b) Using a punch and hammer, remove the grooved pin.

(c) Remove the detent rod and spring.

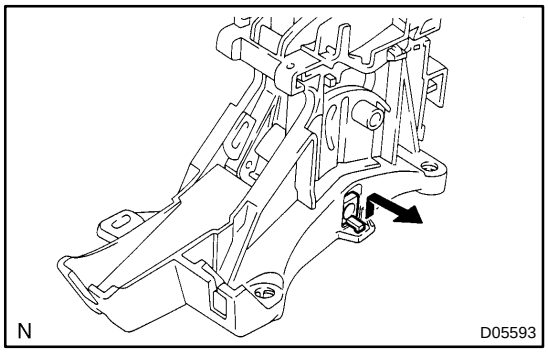

(d) Using a screwdriver, remove the control shaft and shift lever sub-assembly.

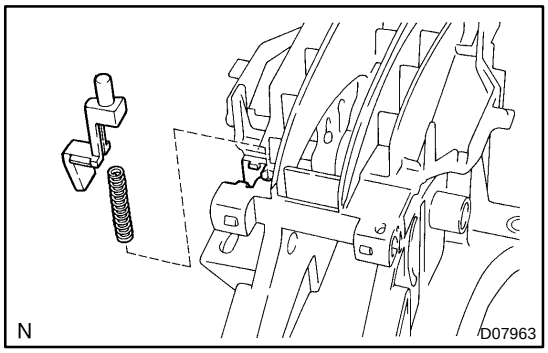

9. REMOVE SHIFT LOCK RELEASE BUTTON AND SPRING

AX0D9-03

INSTALLATION

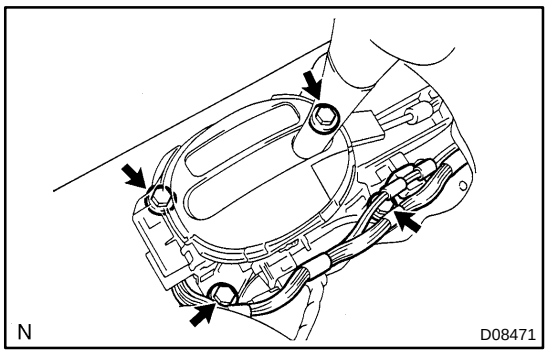

1. INSTALL FLOOR SHIFT ASSEMBLY

(a) Install the floor shift assembly with the 4 bolts.
Torque: 12 N·m (120 kgf·cm, 9 ft·lbf)

(b) Install the wire harness clamps to the shift lever plate.

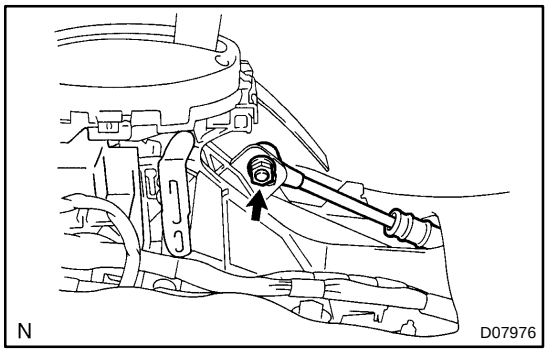

(c) Shift the shift lever in N position, push the lever to the R position side and hold it there.

(d) While pulling the cable, install the cable with the nut.
Torque: 12 N·m (120 kgf·cm, 9 ft·lbf)

(e) Connect the 2 connectors.

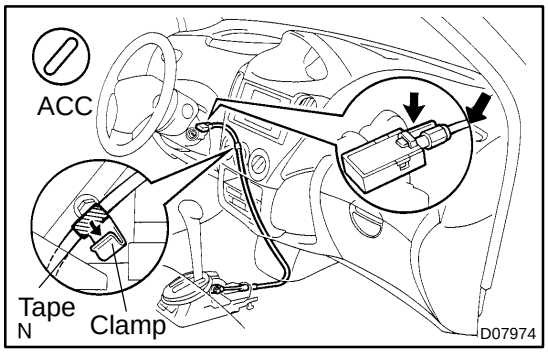

2. INSTALL KEY INTERLOCK CABLE

(a) With the key in ACC, install the cable cap claw to the key interlock.

(b) Install the cable to the clamp for No.1 instrument panel box.

(c) Insert the cable end rod (ø4) from the slit of the shift lever plate.

(d) Insert the slide cap into the through hole and install.

(e) Insert the lever pin into the hole in the cable end.

HINT:

- At this time, ensure that the shift lever is in N position.
- After installation, make sure that the lever pin is pulled by the cable and is stopped with a stopper.

(f) To check that the spring for automatic adjustment works properly, hold the slide cap and move it back and forth.

(g) Lock the adjust lock cap.

HINT:

Rotate it counterclockwise by 90˚ facing to the front of the vehicle.

HINT:

- Install the cable on the shift lever side with the key in ACC.
- Make sure the slide amount for the spring for automatic adjustment is 8 mm (0.31 in.).

3. INSTALL REAR CONSOLE BOX, INSTRUMENT CLUSTER PANEL AND COLUMN COVER
(See page BO-84)

4. INSPECT KEY INTERLOCK AND SHIFT LOCK OPERATION

(a) Check that the starter operates when the shift lever is in only P and N position and does not operate in the other ranges.

(b) Operate the shift lever and check that the reading on the indicator conforms to the actual position.

(c) Check that the ignition key can be pulled out in P position.

(d) Check that the ignition key does not turn to LOCK position in any other range than P position.

(e) Check that the shift lever can be shifted from P position to another position when the shift release button is pressed.

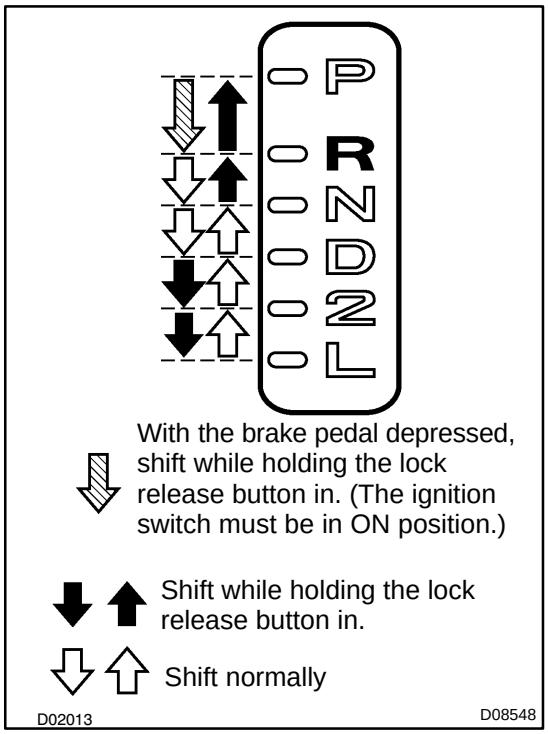

(f) When shifting it to each range, make sure that the shifting lever moves smoothly, can be moderately operated and the position indicator displays correctly.

Ranges which can be operated without pressing the shift lever knob button

R → N → D → 2, L → 2 → D → N

Ranges which can be operated only while pressing the shift lever knob button

2 → L, N → R → P

Ranges which can be operated only while pressing the shift lever knob button, ignition switch ON and brake pedal depressed

P → R

(g) When starting the engine, make sure that the vehicle moves forward when shifting from N to D position, and moves rearward when shifting to R position.

AX0ME-01

REASSEMBLY

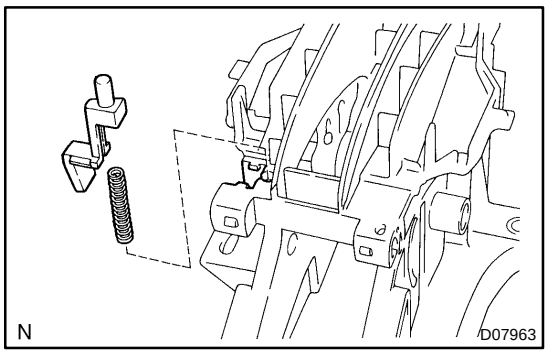

1. INSTALL SPRING AND SHIFT LOCK RELEASE BUTTON

2. INSTALL SHIFT LEVER SUB-ASSEMBLY

(a) Apply MP grease on the control shaft, shift lever sub-assembly, grooved pin, spring and detent rod.

(b) Install the shift lever sub-assembly and control shaft to the shift lever plate.

(c) Install the spring and detent rod.

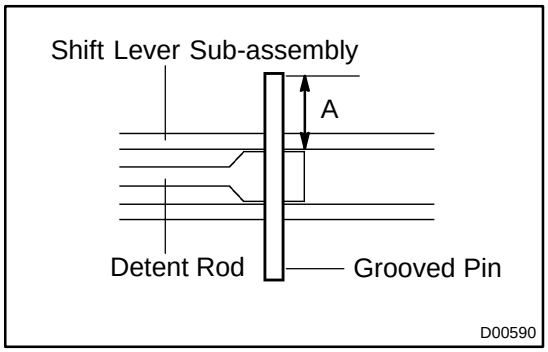

(d) Using a punch and hammer, install the grooved pin to the detent rod pin hole.
A: 29.5 ± 0.5 mm (1.161 ± 0.020 in.)

(e) Check the detent rod operation.

3. INSTALL SHIFT LOCK SOLENOID ROD

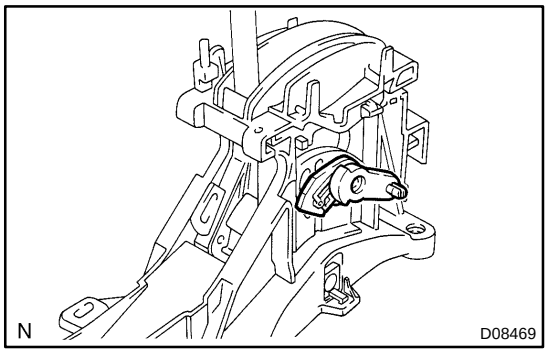

4. INSTALL KEY INTERLOCK CABLE ROD

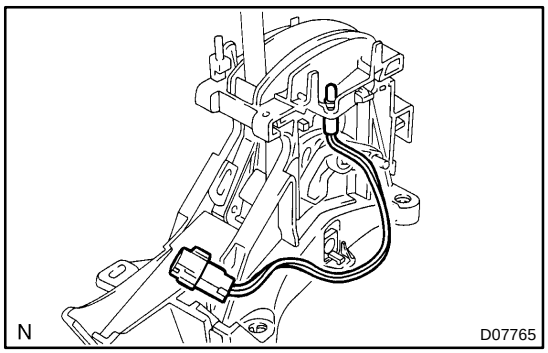

5. INSTALL INDICATOR LIGHT WIRE

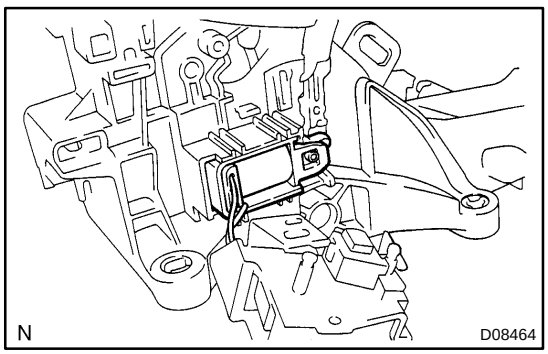

6. INSTALL SHIFT LOCK UNIT

(a) Install the solenoid.

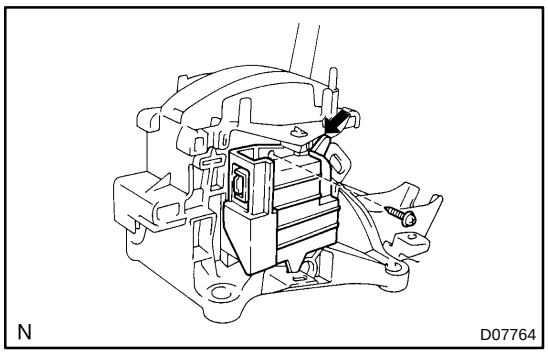

(b) Install the shift lock unit with the screw.

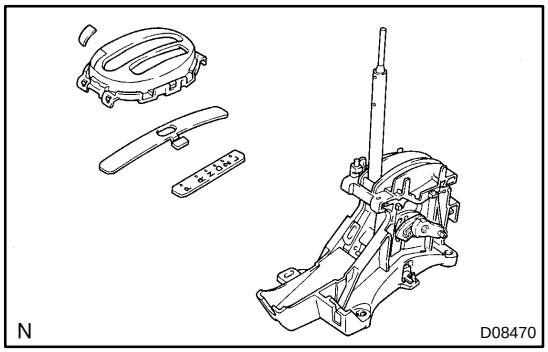

7. INSTALL POSITION INDICATOR HOUSING

(a) Install the position indicator plate to the position indicator housing.
(b) Install the position indicator slide cover to the shift lever plate.
(c) Install the position indicator housing to the shift lever plate.
(d) Install the cover to the position indicator housing.

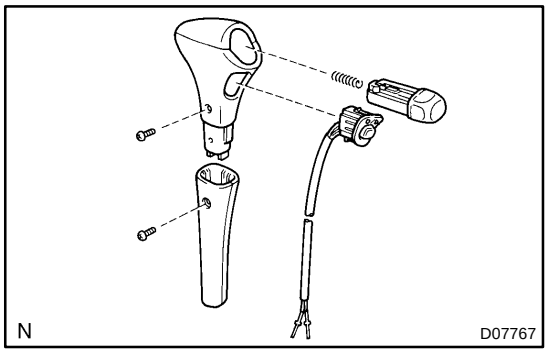

8. INSTALL SHIFT LEVER KNOB SUB-ASSEMBLY

(a) Apply MP grease on the shift lever knob button and spring.
(b) Install the O/D main switch.
(c) Install the spring and shift lever knob button.
(d) Install the shift lever knob cover.
(e) Install the shift lever sub-assembly with the 2 screws.

HINT:

Coat the threads of screws with sealant.

Sealant:
Part No. 08833-00080, THREE BOND 1344, LOCTITE 242 or equivalent

NOTICE:

Make sure not to catch O/D main switch wire harness.

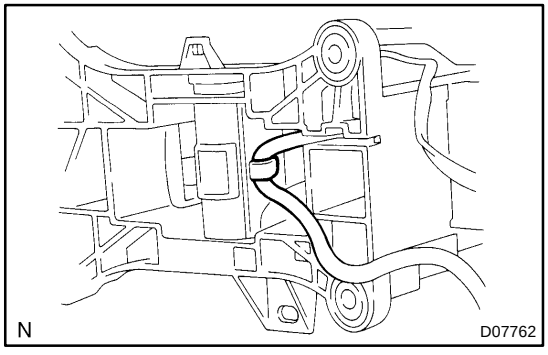

(f) Clamp the wire harness to the shift lever plate.

9. INSTALL O/D MAIN SWITCH TERMINAL

AX0D6-03

REMOVAL

1. REMOVE REAR CONSOLE BOX

2. REMOVE COLUMN COVER (See page BO-76)

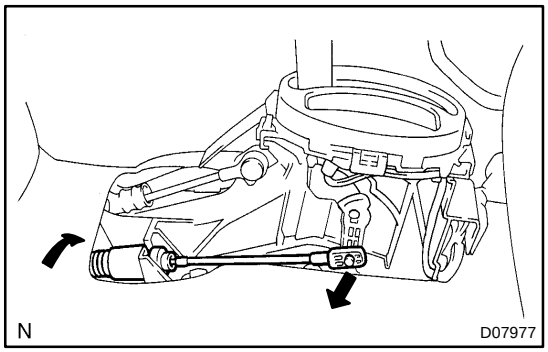

3. REMOVE KEY INTERLOCK CABLE

(a) Release the adjust lock cap.

HINT:

Rotate it clockwise by 90° facing to the front of the vehicle.

(b) Remove the cable end from the rod on the shift lever side.

(c) Remove the cable on the shift lever side.

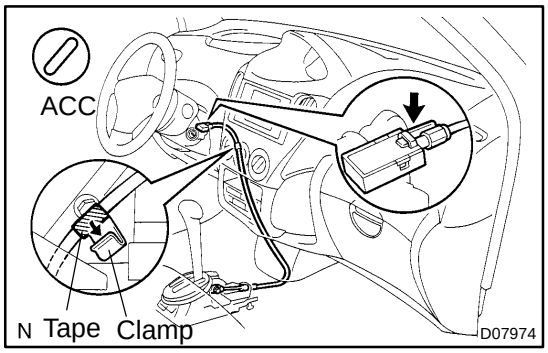

(d) Remove the cable from the clamp for No. 1 instrument panel box.

(e) With the key in ACC, remove the cable cap claw from the key interlock and pull it.

4. REMOVE FLOOR SHIFT ASSEMBLY

(a) Disconnect the 2 connectors.

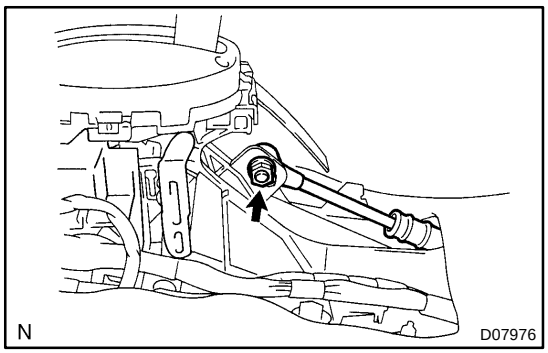

(b) Remove the nut and disconnect the transaxle control cable.

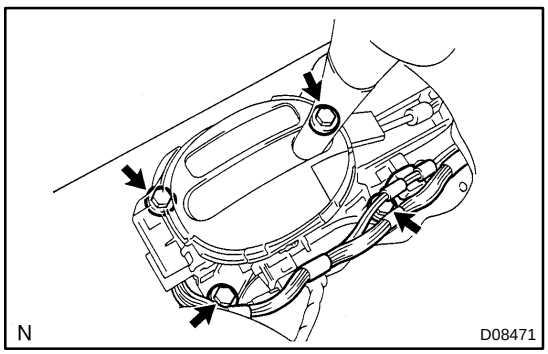

(c) Remove the 2 wire harness clamps from the shift lever assembly.

(d) Remove the bolts and floor shift lever assembly.

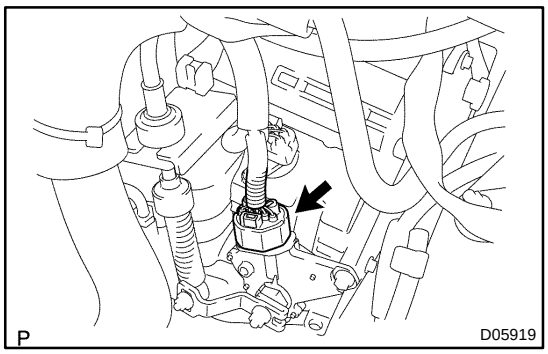

PARK/NEUTRAL POSITION (PNP) SWITCH

AX0M1-01

ON-VEHICLE REPAIR

1. REMOVE AIR CLEANER ASSEMBLY

2. DISCONNECT PARK/NEUTRAL POSITION SWITCH CONNECTOR

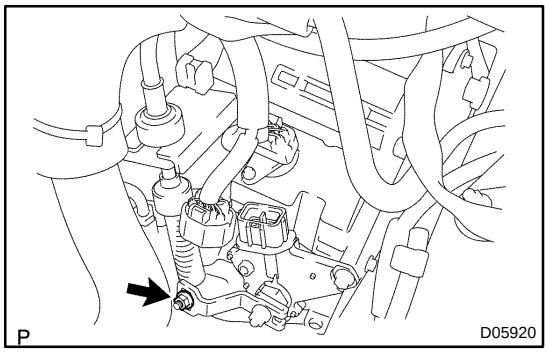

3. REMOVE PARK/NEUTRAL POSITION SWITCH

(a) Remove the nut.

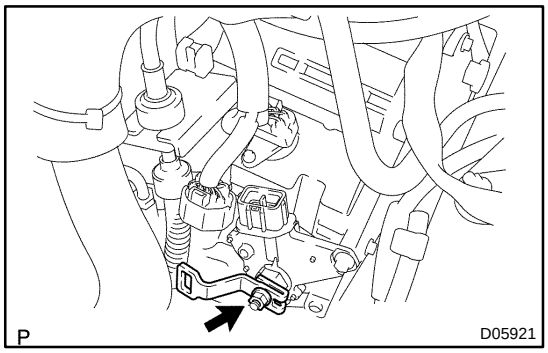

(b) Remove the nut, washer and control shift lever.

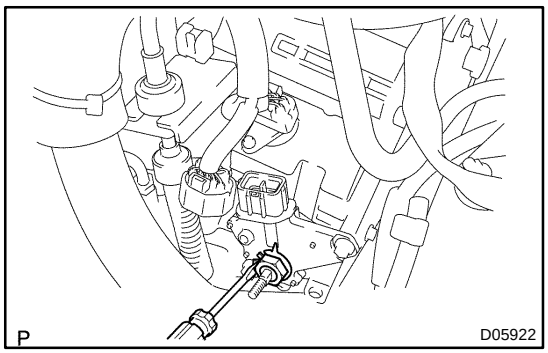

(c) Using a screwdriver, pry off the lock plate.

(d) Remove the nut and lock plate.

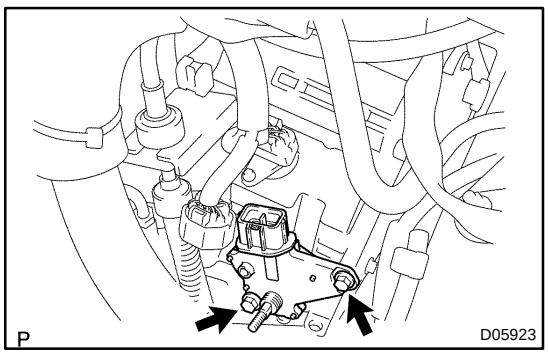

(e) Remove the 2 bolts and pull out the park/neutral position switch.

4. INSTALL AND ADJUST PARK/NEUTRAL POSITION SWITCH

(a) Install the park/neutral position switch with the 2 bolts.
Torque: 5.4 N·m (55 kgf·cm, 48 in.·lbf)

(b) Install a new lock plate and nut.
Torque: 6.9 N·m (70 kgf·cm, 61 in.·lbf)

(c) Bend the claws on the lock plate to fix the nut.

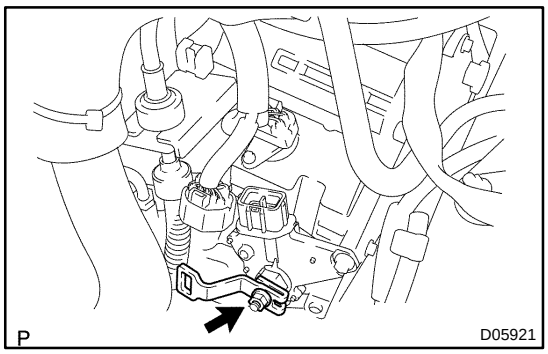

(d) Install the control shift lever with the nut.
Torque: 13 N·m (130 kgf·cm, 9 ft·lbf)

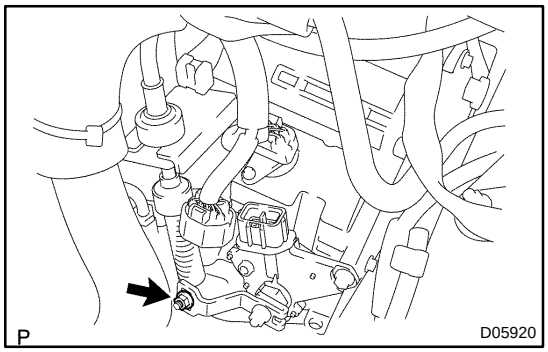

(e) Connect the shift control cable to the control shaft.
Torque: 15 N·m (150 kgf·cm, 11 ft·lbf)

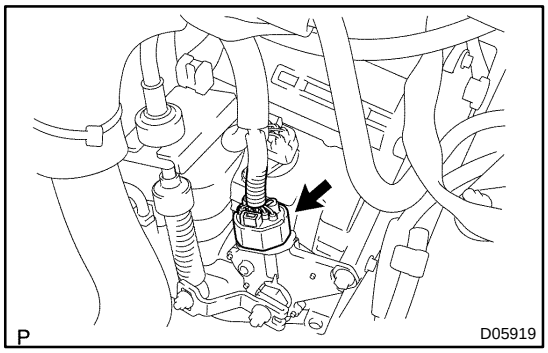

5. CONNECT PARK/NEUTRAL POSITION SWITCH CONNECTOR

6. CHECK PARK/NEUTRAL POSITION OPERATION

Check that the engine can be started with the shift lever only in the N or P position, but not in other position.

If the engine can not be stated not as started above, carry out the adjustment procedure (See page DI-149).

7. INSTALL AIR CLEANER ASSEMBLY

8. TEST DRIVE VEHICLE

AX0D4-03

INSPECTION

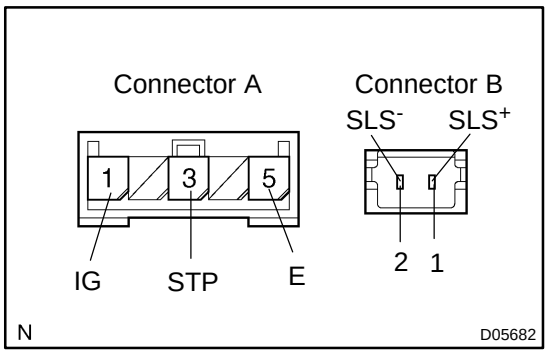

1. INSPECT SHIFT LOCK CONTROL UNIT ASSEMBLY

Using a voltmeter, measure the voltage at each terminal.

HINT:

Do not disconnect the shift lock control unit assembly connector.

Terminal	Measuring Condition	Voltage (V)
A1 (IG) - A5 (E)	Ignition switch ON	10 - 14
A3 (STP) - A5 (E)	Depressing brake pedal	10 - 14
B1 (SLS^+) - B2 (SLS^-)	(1) Ignition switch ON and P range	0
	(2) Depressing brake pedal	10 - 14
	(3) Except P range	0

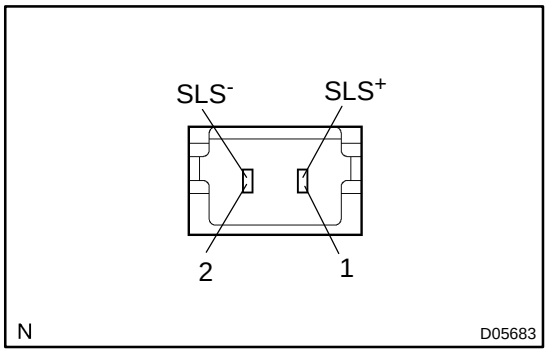

2. INSPECT SHIFT LOCK SOLENOID

(a) Disconnect the solenoid connector.

(b) Apply battery positive voltage between terminals 1 and 2. Check that operation noise can be heard from the solenoid.

If the solenoid does not operate, replace the solenoid.

SHIFT LOCK SYSTEM

AX0D3-03

LOCATION

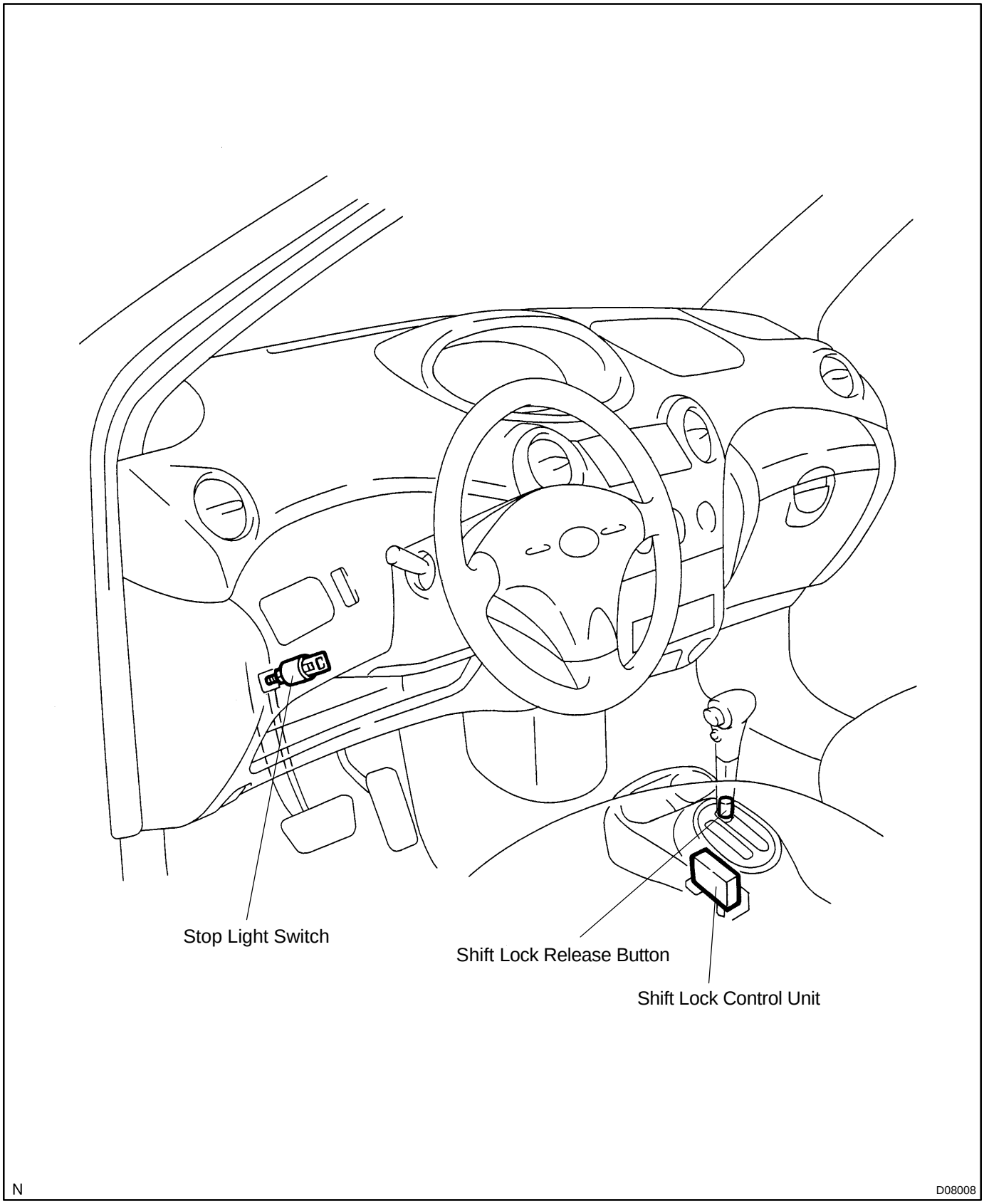

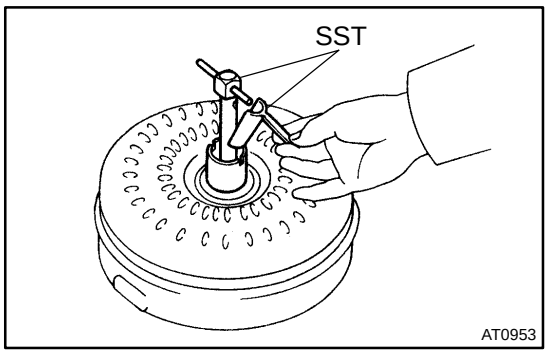

TORQUE CONVERTER CLUTCH AND DRIVE PLATE

AX0DC-05

INSPECTION

1. INSPECT ONE-WAY CLUTCH

(a) Install SST into the inner race of the one-way clutch.
SST 09350-32014 (09351-32010)

(b) Install SST so that it fits in the notch of the converter hub and outer race of the one-way clutch.
SST 09350-32014 (09351-32020)

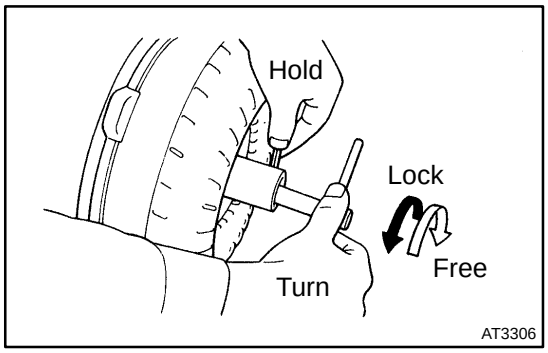

(c) With the torque converter clutch standing on its side, the clutch locks when turned counterclockwise, and rotates freely and smoothly clockwise.

If necessary, clean the converter clutch and retest the clutch. Replace the converter if the clutch still fails the test.

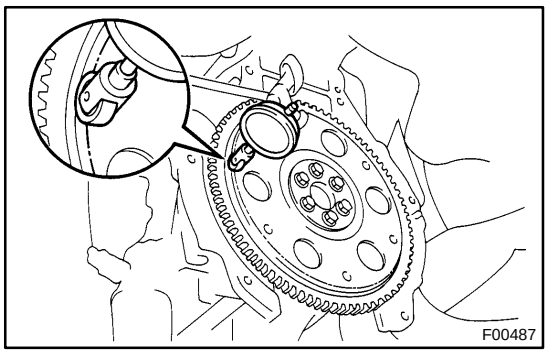

2. MEASURE DRIVE PLATE RUNOUT AND INSPECT RING GEAR

(a) Set up a dial indicator, and measure the drive plate runout.

(b) Check the damage of the ring gear.
Maximum runout: 0.20 mm (0.0079 in.)

If the runout is not within the specification or ring gear is damaged, replace the drive plate.
Torque: 88 N·m (900 kgf·cm, 65 ft·lbf)

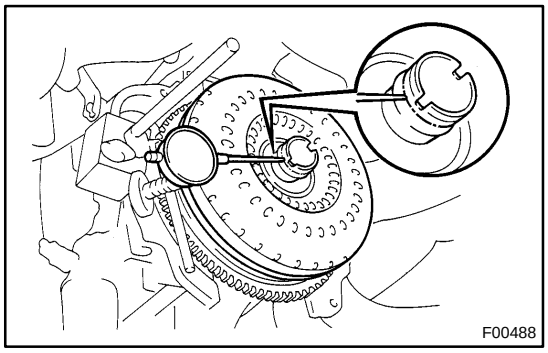

3. MEASURE TORQUE CONVERTER CLUTCH SLEEVE RUNOUT

(a) Temporarily mount the torque converter clutch to the drive plate. Set up a dial indicator and measure the torque converter clutch sleeve runout.
Maximum runout: 0.30 mm (0.0118 in.)

If the runout is not within the specification, try to correct by reorienting the installation of the converter.

HINT:
Mark the position of the converter clutch to ensure the correct installation.

(b) Remove the torque converter clutch.

VALVE BODY ASSEMBLY

AX0D2-06

ON-VEHICLE REPAIR

1. REMOVE LH ENGINE UNDER COVER

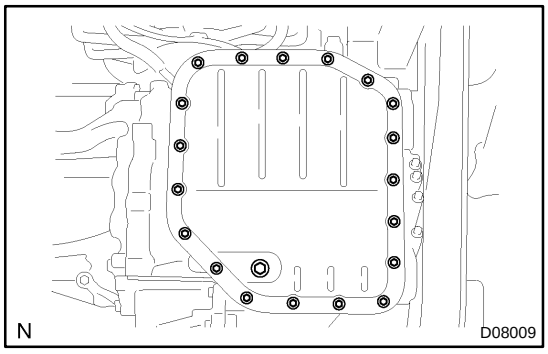

2. REMOVE DRAIN PLUG AND DRAIN ATF

3. REMOVE OIL PAN AND GASKET

Remove the 19 bolts, oil pan and gasket.

NOTICE:

Some fluid will remain in the oil pan. Remove all pan bolts, and carefully remove the oil pan assembly. Discard the gasket.

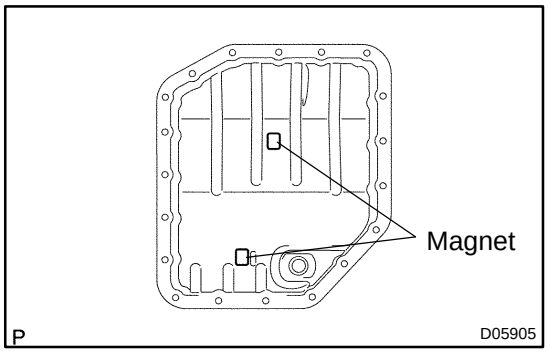

4. REMOVE 2 MAGNETS FROM OIL PAN

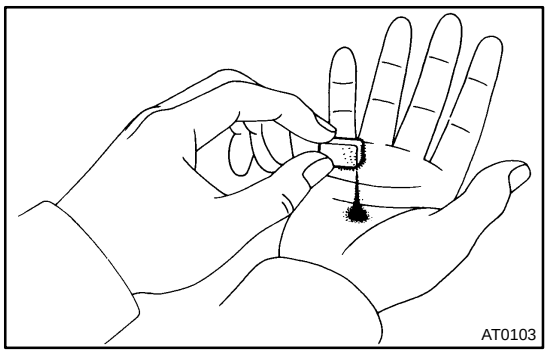

5. EXAMINE PARTICLES IN PAN

Remove the magnets and use them to collect any steel chips. Look carefully at the chips and particles in the pan and the magnet to anticipate what type of wear you will find in the transaxle.

Steel (magnetic): bearing, gear and plate wear

Brass (non-magnetic): bearing wear

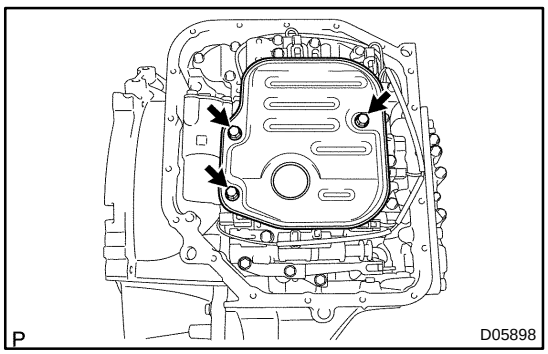

6. REMOVE OIL STRAINER

NOTICE:

Be careful as some fluid will come out with the oil strainer.

(a) Remove the 3 bolts and oil strainer.

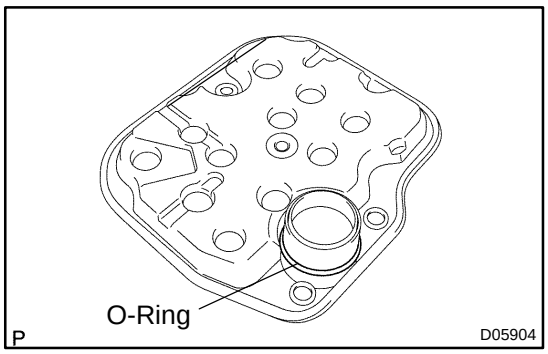

(b) Remove the O-ring from the oil strainer.

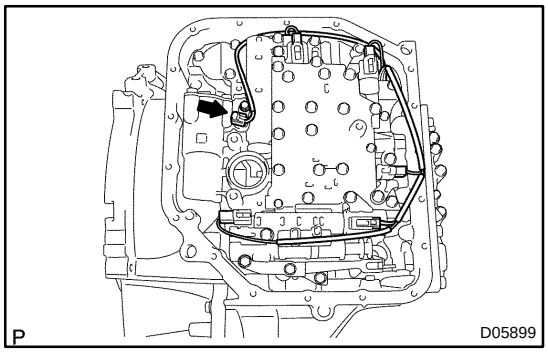

7. DISCONNECT 5 SHIFT SOLENOID VALVE CONNECTORS

8. DISCONNECT ATF TEMPERATURE SENSOR

Remove the bolt and lock plate, and remove the ATF temperature sensor.

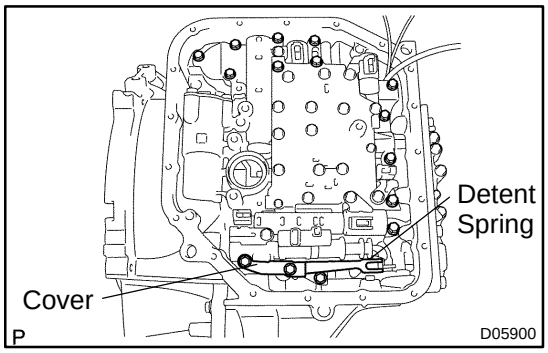

9. REMOVE VALVE BODY

(a) Remove the 2 bolts, cover and detent spring.

(b) Remove the 12 bolts and valve body.

NOTICE:

Be careful not to drop the check valve body, spring and accumulator piston.

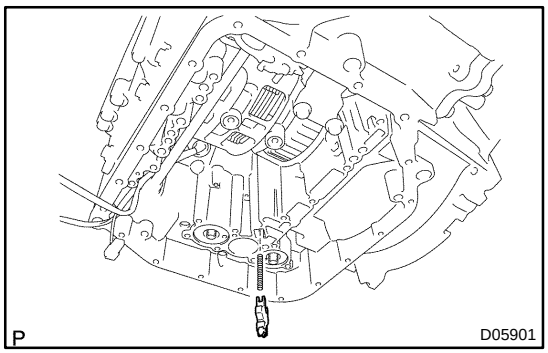

10. REMOVE CHECK BALL BODY

Remove the check ball body and spring.

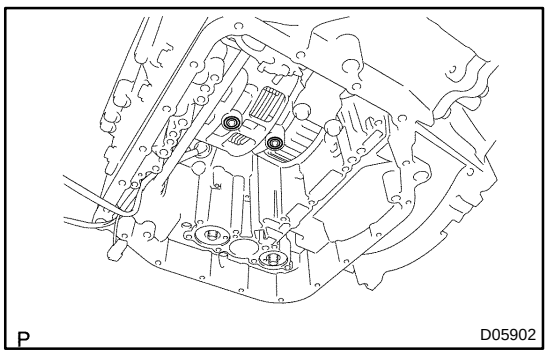

11. REMOVE 2 APPLY GASKETS

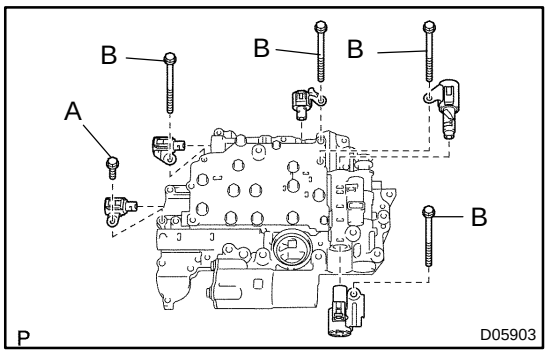

12. REMOVE SHIFT SOLENOID VALVE

Remove the 5 bolts and 5 shift solenoid valves.

13. INSTALL 5 SOLENOID VALVES

Install the 5 shift solenoid valves with the 5 bolts.

Torque:
Bolt A: 11 N·m (110 kgf·cm, 8 ft ·lbf)
Bolt B: 11 N·m (110 kgf·cm, 8 ft ·lbf)
Bolt length:
Bolt A: 12 mm (0.47 in.)
Bolt B: 45 mm (1.77 in.)

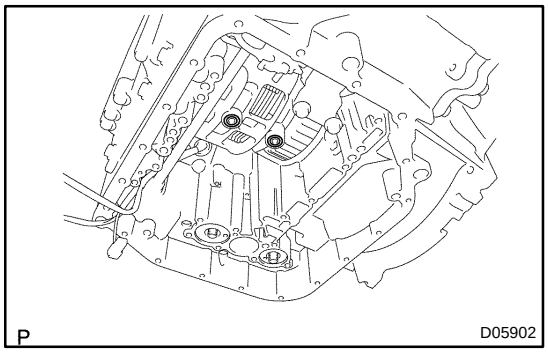

14. INSTALL APPLY GASKET

(a) Coat 2 new apply gaskets with ATF.
(b) Install the gaskets to the transaxle case.

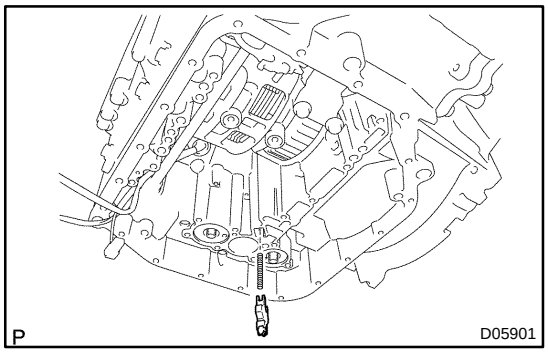

15. INSTALL CHECK BALL BODY

Install the spring and check ball body.

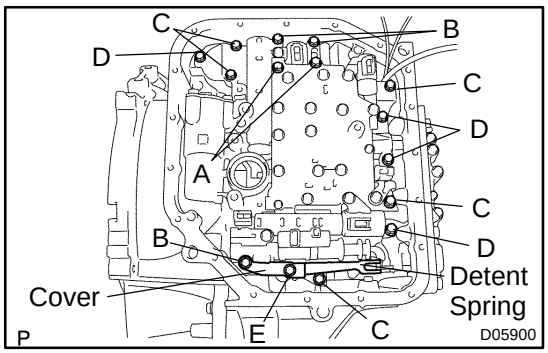

16. INSTALL VALVE BODY

(a) Align the groove of the manual valve with the pin of the manual valve lever.
(b) Temporarily install the valve body with the 12 bolts.
Bolt length:
Bolt A: 55 mm (2.17 in.)
Bolt B: 45 mm (1.77 in.)
Bolt C: 32 mm (1.26 in.)
Bolt D: 22 mm (0.87 in.)
(c) Temporarily install the detent spring and cover with the 2 bolts.
Bolt length:
Bolt B: 45 mm (1.77 in.)
Bolt E: 14 mm (0.55 in.)
(d) Check that the manual valve lever contacts the center of the roller at the tip of the detent spring.
(e) Tighten the 15 bolts.
Torque: 11 N·m (110 kgf·cm, 8 ft·lbf)

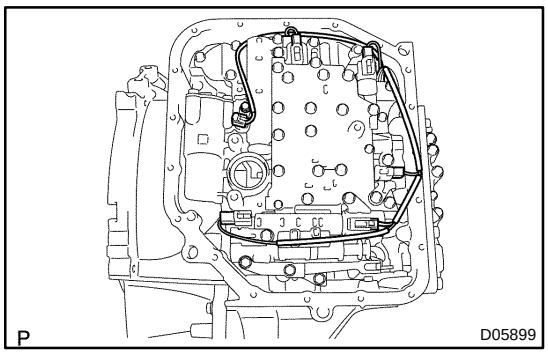

17. INSTALL ATF TEMPERATURE SENSOR

Install the ATF temperature sensor with the lock plate and bolt.

Torque: 11 N·m (110 kgf·cm, 8 ft·lbf)

18. CONNECT 5 SHIFT SOLENOID VALVE CONNECTORS

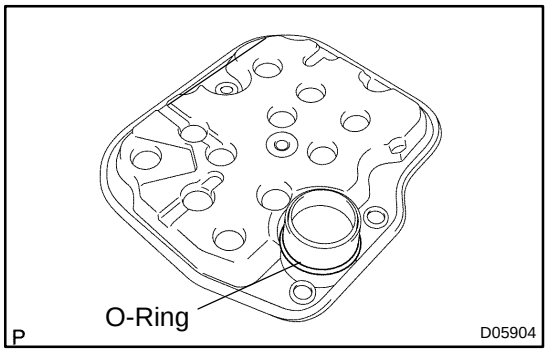

19. INSTALL OIL STRAINER

(a) Coat a new O-ring with ATF.

(b) Install the O-ring to the oil strainer.

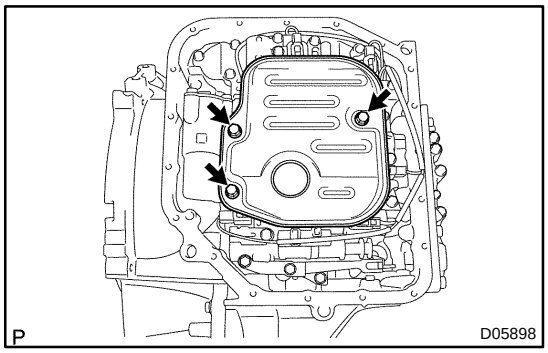

(c) Install the oil strainer with the 3 bolts.

Torque: 11 N·m (110 kgf·cm, 8 ft·lbf)

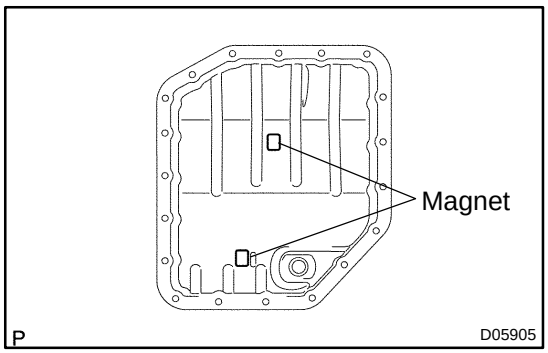

20. INSTALL 2 MAGNETS IN OIL PAN

21. INSTALL OIL PAN AND GASKET

(a) Install a new gasket to the oil pan.

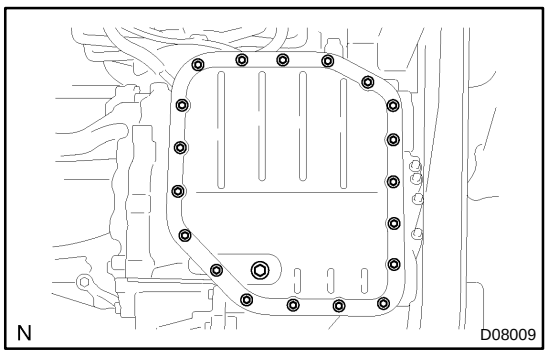

(b) Install the oil pan and a new gasket with the 19 bolts.

Torque: 7.8 N·m (80 kgf·cm, 69 in.·lbf)

22. INSTALL DRAIN PLUG

Install a new gasket and drain plug.

Torque: 49 N·m (500 kgf·cm, 36 ft·lbf)

23. FILL ATF AND CHECK ATF LEVEL (See page DI-149)

24. INSTALL LH ENGINE UNDER COVER

VEHICLE SPEED SENSOR

AX03N-10

ON-VEHICLE REPAIR

1. REMOVE AIR CLEANER ASSEMBLY

2. DISCONNECT VEHICLE SPEED SENSOR CONNECTOR

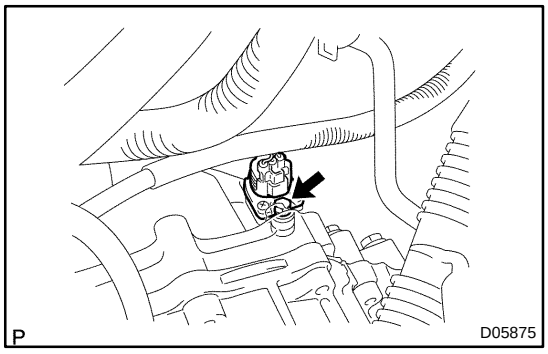

3. REMOVE VEHICLE SPEED SENSOR ASSEMBLY

(a) Remove the bolt and vehicle speed sensor assembly.

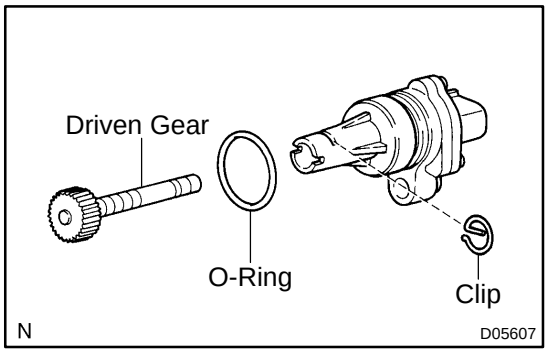

(b) Remove the clip and driven gear from the vehicle speed sensor.

(c) Remove the O-ring from the vehicle speed sensor.

4. INSTALL VEHICLE SPEED SENSOR ASSEMBLY

(a) Coat a new O-ring with ATF and install it to the vehicle speed sensor.

(b) Install the driven gear to the vehicle speed sensor with the clip.

(c) Install the vehicle speed sensor assembly with the bolt.
Torque: 7.0 N·m (71 kgf·cm, 5 ft·lbf)

5. CONNECT VEHICLE SPEED SENSOR CONNECTOR

6. INSTALL AIR CLEANER ASSEMBLY

AUDIO SYSTEM

BE1FG-01

DESCRIPTION

1. RADIO WAVE BAND

The radio wave bands used in radio broadcasting are as follows:

Frequency	30 kHz	300 kHz	3 MHz	30 MHz	300 MHz
Designation	LF	MF	HF	VHF	
Radio wave		AM ⟷		FM ⟷	
Modulation	Amplitude modulation			Frequency modulation	

LF: Low Frequency
MF: Medium Frequency
HF: High Frequency
VHF: Very High Frequency

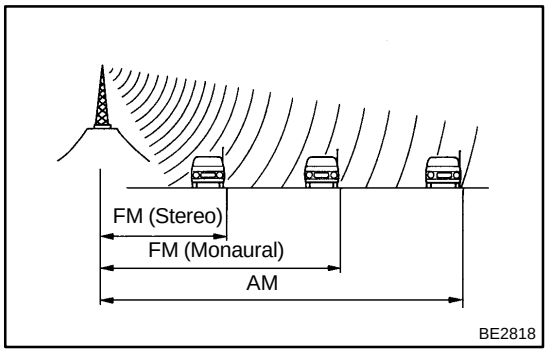

2. SERVICE AREA

There are great differences in the size of the service area for AM and FM monaural. Sometimes FM stereo broadcasts cannot be received even through AM can be received in very clearly.
Not only does FM stereo have the smallest service area, but it also picks up static and other types of interference (”noise”) easily.

3. RECEPTION PROBLEMS

Besides the problem of static, there are also the problems called ”fading”, ”multipath” and ”fade out”. These problems are caused not by electrical noise but by the nature of the radio waves themselves.

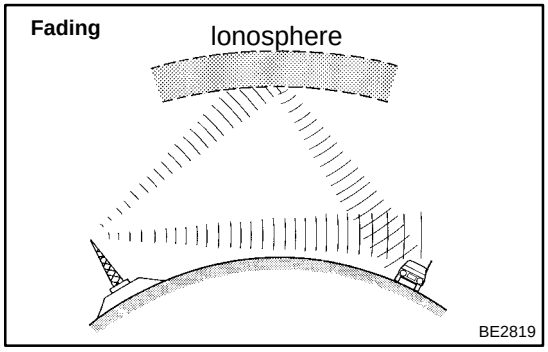

(1) Fading

Besides electrical interference, AM broadcasts are also susceptible to other types of interference, especially at night. This is because AM radio waves bounce off the ionosphere at night. These radio waves then interfere with the signals from the same transmitter that reach the vehicle’s antenna directly. This type of interference is called ”fading”.

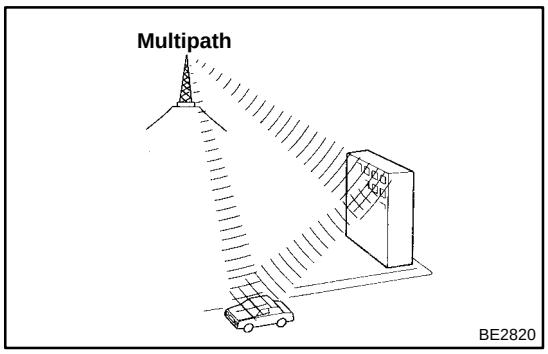

(2) Multipath
One type of interference caused by the bounce of radio waves off of obstructions is called ”multipath”. Multipath occurs when a signal from the broadcast transmitter antenna bounces off buildings and mountains and interferes with the signal that is received directly.

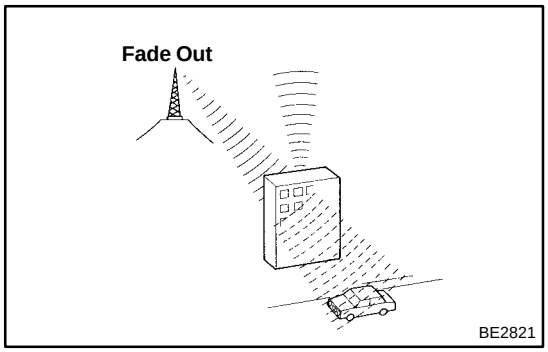

(3) Fade Out
Because FM radio waves are of higher frequencies than AM radio waves, they bounce off buildings, mountains, and other obstructions. For this reason, FM signals often seem to gradually disappear or fade away as the vehicle goes behind a building or other obstruction. This is called ”fade out”.

4. COMPACT DISC PLAYER

Compact Disc Players use a laser beam pick-up to read the digital signals recorded on the CD and reproduce analog signals of the music, etc.

HINT:

Never attempt to disassemble or oil any part of the player unit. Do not insert any object other than a disc into the magazine.

NOTICE:

CD players use an invisible laser beam which could cause hazardous radiation exposure. Be sure to operate the player correctly as instructed.

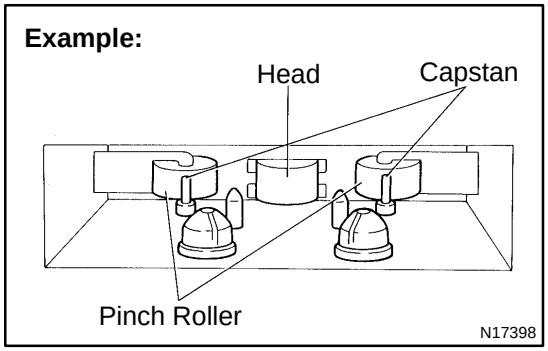

5. Tape Player/Head Cleaning:
MAINTENANCE

(a) Raise the cassette door with your finger.
Next, using a pencil or similar object, push in the guide.

(b) Using a cleaning pen or cotton applicator soaked in cleaner, clean the head surface, pinch rollers and capstans.

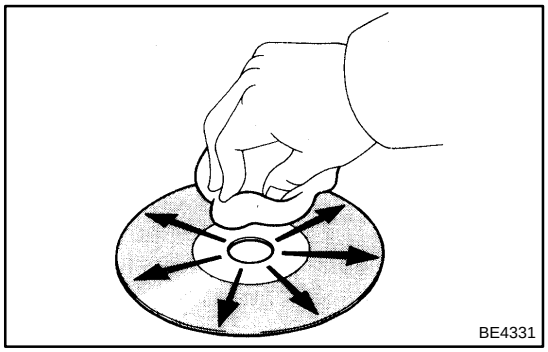

6. CD Player/Disc Cleaning:
MAINTENANCE

If the disc gets dirty, clean the disc by wiping the surface from the center to outside in the radial directions with a soft cloth.

NOTICE:

Do not use a conventional record cleaner or anti-static preservative.

7. OUTLINE OF AVC-LAN

(a) What is AVC-LAN?

AVC-LAN is the abbreviation, which stands for Audio Visual Communication-Local Area Network. This is a unified standard co-developed by 6 audio manufactures associated with Toyota Motor Corporation.

The Unified standard covers signals, such as audio signal, visual signal, signal for switch indication and communication signal.

(b) Objectives

Recently the car audio system has been rapidly developed and functions have been changed drastically. The conventional system has been switched to the multi-media type such as a navigation system. At the same time the level of customers needs to audio system has been upgraded. This lies behind this standardization.

The concrete objectives are explained below.

(1) When products by different manufactures were combined together, there used to be a case that malfunction occurred such as sound did not come out. This problem has been resolved by standardization of signals.

(2) Various types of after market products have been able to add or replace freely.

(3) Because of the above (2), each manufacture has become able to concentrate on developing products in their strongest field. This has enabled many types of products provided inexpensively.

(4) Conventionally, a new product developed by a manufacture could not be used due to a lack of compatibility with other manufactures products. Because of this new standard, users can enjoy compatible products provided for them timely.

(c) The above descriptions are the objectives to introduce AVC-LAN. By this standardization, development of new products will no longer cause systematic errors. Thus, this is very effective standard for a product in the future.

HINT:

- When +B short or GND short is detected in AVC-LAN circuit, communication stops. Accordingly the audio system does not function normally.
- When audio system is not equipped with a navigation system, audio head unit is the master unit. (When audio system is equipped with a navigation system, navigation ECU is the master unit.)
- The car audio system using AVC-LAN circuit has a diagnosis function.
- Each product has its own specified numbers called physical address. Numbers are also allotted to each function in one product, which are called logical address.

BE1FI-01

INSPECTION

INSPECT RADIO RECEIVER ASSEMBLY CIRCUIT

Disconnect the connectors from the radio receiver assembly, and inspect the connector on the wire harness side.

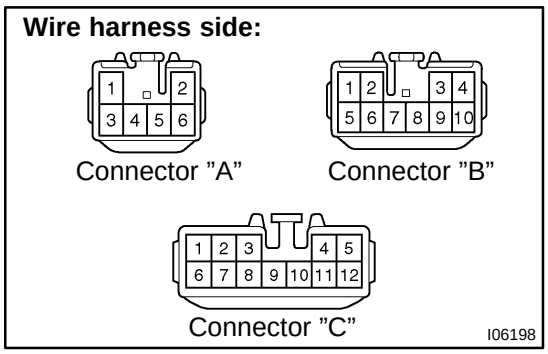

Tester connection	Condition	Specified condition
B7 - Ground	Constant	Continuity
B3 - Ground	Ignition switch LOCK	No voltage
B3 - Ground	Ignition switch ACC or ON	Battery positive voltage
B4 - Ground	Constant	Battery positive voltage

If the circuit is not as specified, inspect the circuits connected to other parts.

BE193-03

LOCATION

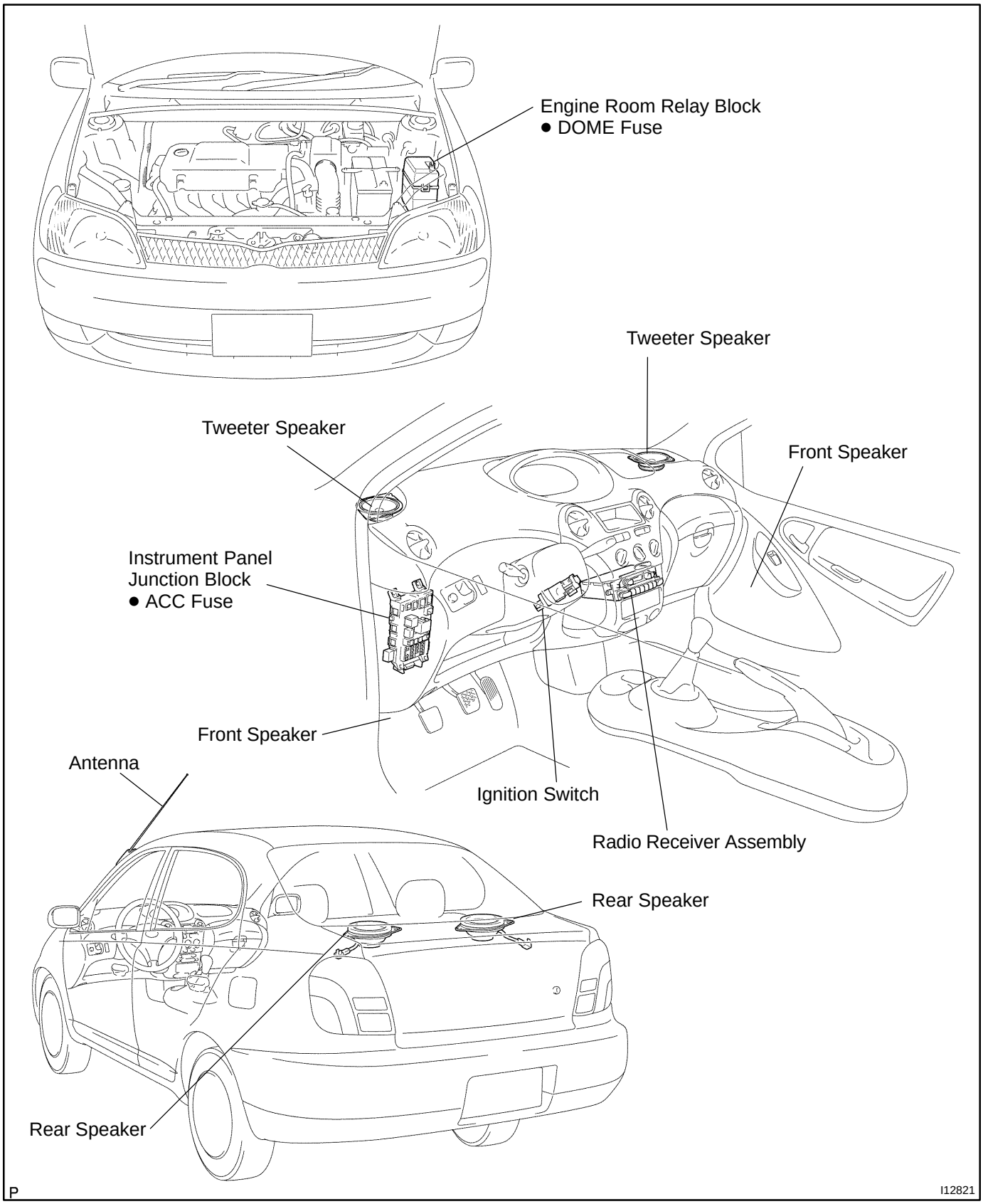

BE1FH-01

TROUBLESHOOTING

1. DIAGNOSIS FUNCTION

Error codes over tuner and connected equipment are displayed on the screen of tuner.

(a) Diagnosis mode

(1) Diagnosis start-up:

For shifting to diagnosis mode, push ”CD” switch 3 times with pressing ”1” and ”6” of PRESET switch at the same time while the audio power is OFF and ACC is ON.

To exit from diagnosis mode, press ”CD” switch for 2 seconds or turn the ignition key OFF.

(When ”1-190” is displayed, the mode is transferred to LAN check mode.)

(2) LAN check:

When starting up the diagnosis mode, the mode turns to LAN check mode, the screen displays the code numbers (physical address) of tuner and connected equipment. Smaller codes are displayed in order, displayed code numbers are switched by operating TUNE ”UP” or ”DOWN” switch. In LAN check mode, by pressing ”5” of PRESET switch for more than 2 secs., diagnosis memory of each equipment can be deleted, when deletion is completed, the mode returns to LAN check mode.

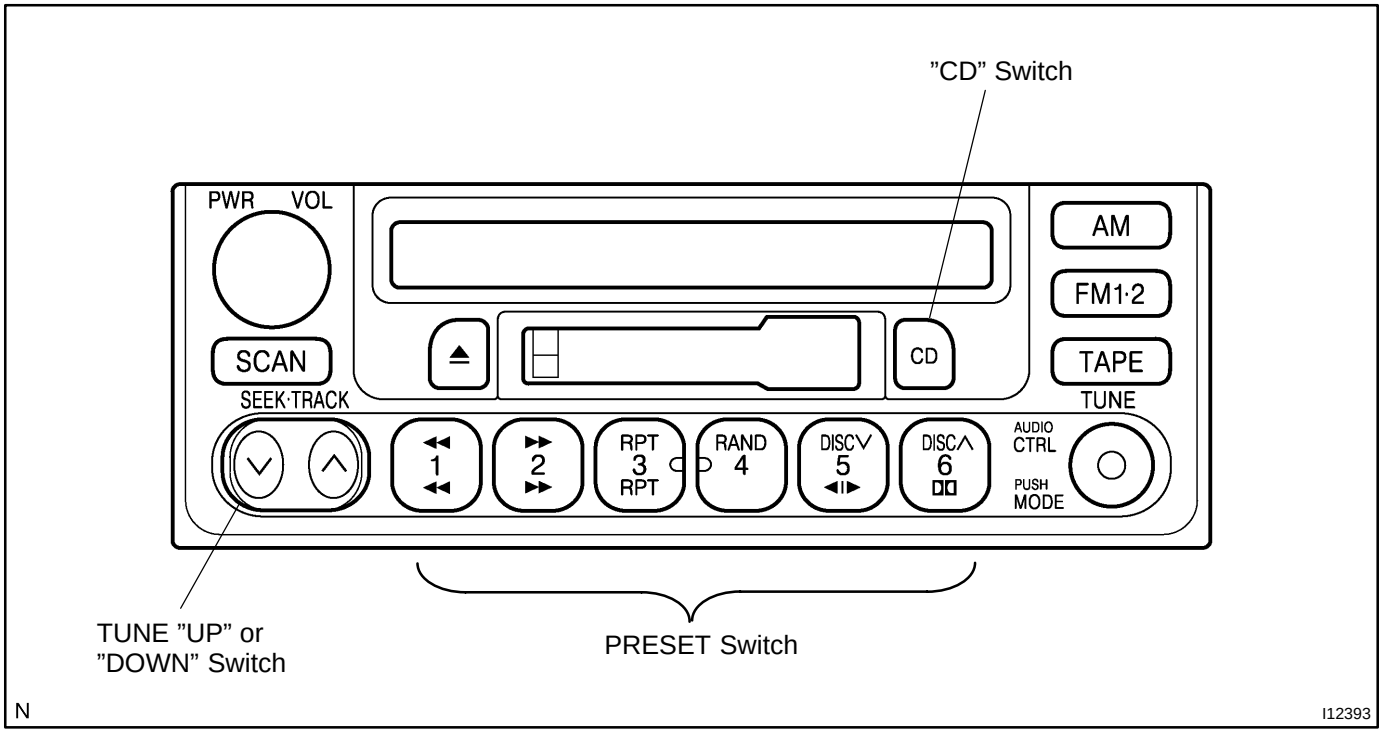

Code No. (physical address) List

Code No. (physical address)	Equipment name
190	Radio receiver assembly (Audio head unit)

(b) System check

- When pressing ”1” of PRESET switch in LAN check mode, the mode turns to the system check mode, the system performs self diagnosis of connected equipment and displays the results.(”SYS” (showing the system is under detection) is displayed.)
- Perform the operation shown in the following illustration, then read the result of the inspection.

HINT:

- It sometimes takes approx. 40 secs. till the system inspection is completed.
- The chart below is an example of when diagnosis code ”21” appears on the physical address (190) equipment. (ROM error occurs on the radio receiver.)
- The smaller code numbers (physical address) are displayed in order (code No., diagnosis code, support code of diagnosis code (object equipment)).
- When no error is detected in the system, ”00” is displayed.
- When an error code is detected, up to 6 codes per one system are displayed. Pressing TUNE ”UP” or ”DOWN” switches the display.
- In the system check mode, when pressing ”6” of PRESET switch the mode returns to LAN check mode.

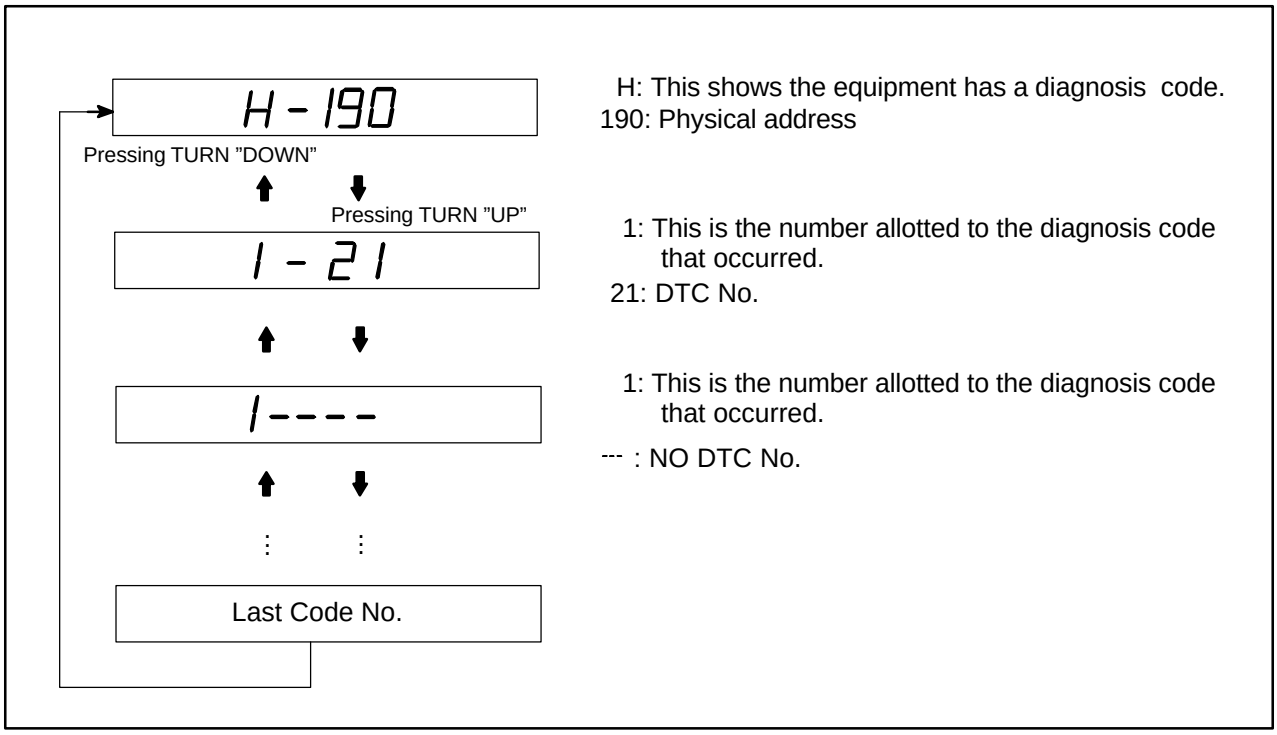

(c) Diagnosis memory

(1) In LAN check mode, when pressing ”2” of PRESET switch the mode turns to the diagnosis memory mode. (”CODE” is displayed.)
The results of self diagnosis performed over tuner and connected equipment are memorized and displayed.

(2) Perform the operation shown in the following illustration, then read the result of the inspection.

HINT:

- The smaller code numbers (physical address) are displayed in order (code No. , periodic communication number when error occurs, diagnosis code, and support code of diagnosis code (object equipment)).
- When no error is detected in the system, ”00” is displayed. When an error code is detected, up to 6 codes per one system are displayed. Pressing TUNE ”UP” or ”DOWN” switches the display. Each diagnosis code is same as code in the system check mode.
- When pressing ”6” of PRESET switch, the mode returns to LAN check mode.
- The following illustration below is an example of when diagnosis code ”D1” appears on the code (190) and (360) equipment. (Communication error occurs between the radio receiver and CD changer.)

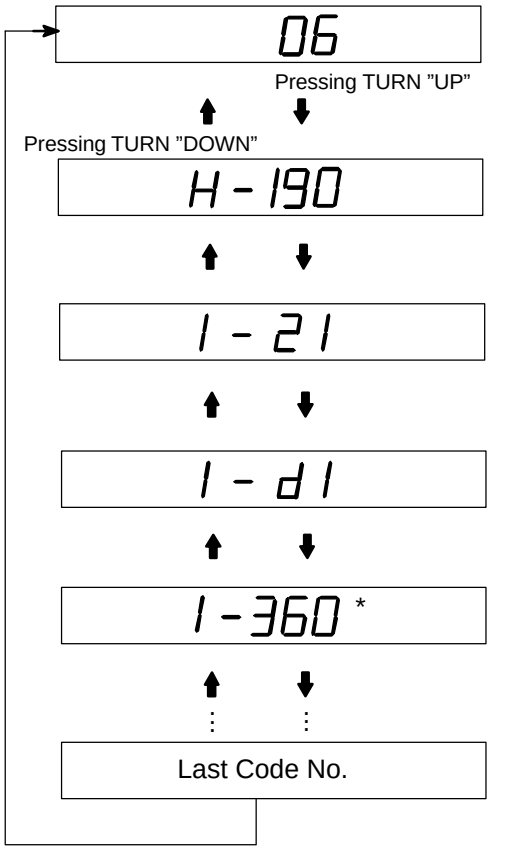

06: Periodic communication number of when occurring in the diagnosis memory code.

H: This shows the equipment has a diagnosis code.
190: Physical address

1: This is the number allotted to the diagnosis code that occurred.
21: Periodic communication number of when occurring in the diagnosis memory code.

1: This is the number allotted to the diagnosis code that occurred.
d1: DTC No.

1: This is the number allotted to the diagnosis code that occurred.
360: Physical address
(Equipment that is communicating code)

*: This code is an example for CD changer in the dealer option, and there are some other optionals.

(d) Diagnosis memory clear
(1) After error is fixed, start up the diagnosis mode.
(2) Continue pressing "5" of PRESET switch for 2 secs. (CLr is displayed.)
(3) Press the "2" of PRESET switch and transfer to the diagnosis memory mode and check that the normal code (00) is output.

2. DIAGNOSIS CODE LIST

- If there is ”O” in the column of system check, an error can be detected when the mode is switched to the system check mode.
- If there is ”O” in the column of diagnosis mode, each unit is monitoring whether or not it has failure. In case of detecting failure, it memorizes DTC.

Parts Name	DTC	Diagnosis item	Diagnosis content	Countermeasure and inspected parts	System Check	Diagnosis memory
Head Unit (190)	42	FM tuner error	There is an error in FM tuner.	Radio receiver check.	X	○
	50	Cassette error	There is an error in cassette deck.		X	○
	51	Cassette eject error	Cassette can not be ejected from Head Unit.		X	○
	D1	Transmitter error	Communication with the equipment that is communicating has failed successively.	Radio receiver check. Wire harness and connecter check.	○	○
	D2	Periodic communication no response	Error in periodic communication.	● Wire harness and connector	X	○
	FF	Diagnosis no response	Result of diagnosis is not issued from start to finish.	Radio receiver check.	○	X

NOTICE:

When replacing the internal mechanism (computer part) of the audio system, be careful that no part of your body or clothing comes in contact with the terminals of the leads from the IC, etc. of the replacement part (spare part).

HINT:

This inspection procedure is a simple troubleshooting which should be carried out on the vehicle during system operation and was prepared on the assumption of system component troubles (except for the wires and connectors, etc.).

Always inspect the trouble taking the following items into consideration.

- Open or short circuit of the wire harness
- Connector or terminal connection fault

	Problem	No.
Radio	No power coming in.	1
	Power coming in, but radio not operating.	2
	Noise present, but AM - FM not operating.	3
	Any speaker does not work.	4
	Either AM or FM does not work.	5
	Reception poor (Volume faint).	5
	Few preset tuning bands.	5
	Sound quality poor.	6
	Cannot set station select button.	6
	Preset memory disappears.	7
Tape Player	Cassette tape cannot be inserted.	8
	Cassette tape inserted, but no power.	9
	Power coming in, but tape player not operating.	10
	Any speaker does not work.	11
	Sound quality poor (Volume faint).	12
	Tape jammed, malfunction with tape speed or auto-reverse.	13
	APS, SKIP, RPT buttons not operating.	14
	Cassette tape will not ejected.	15
CD Player	CD cannot be inserted.	16
	CD inserted but no power.	17
	Power coming in, but CD player not operating.	18
	Sound jumps.	19
	Sound quality poor (Volume faint).	20
	Any speaker does not work.	21
	CD will not be ejected.	22
Antenna	Antenna-related.	23
Noise	Noise produced by vibration or shock while driving.	24
	Noise produced when engine starts.	25

1	Radio	NO POWER COMING IN

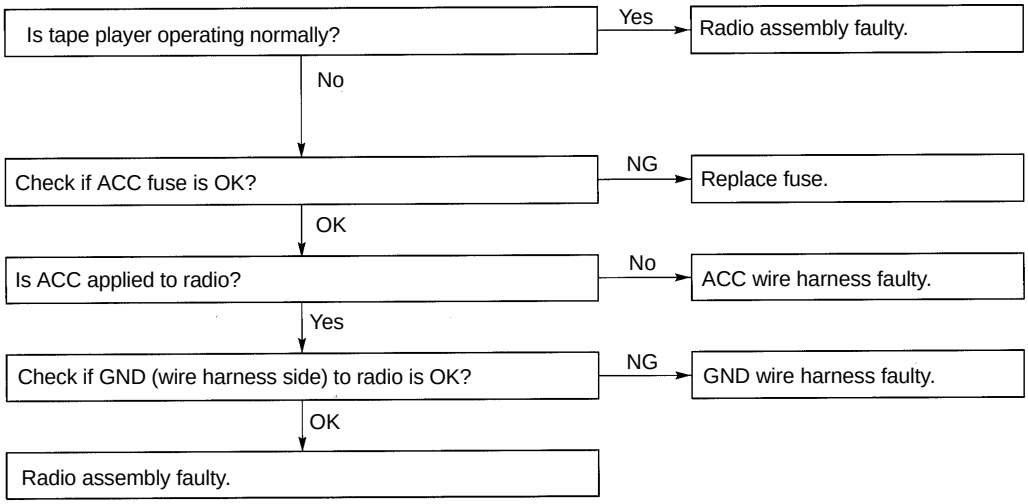

2	Radio	POWER COMING ON, BUT RADIO NOT OPERATING

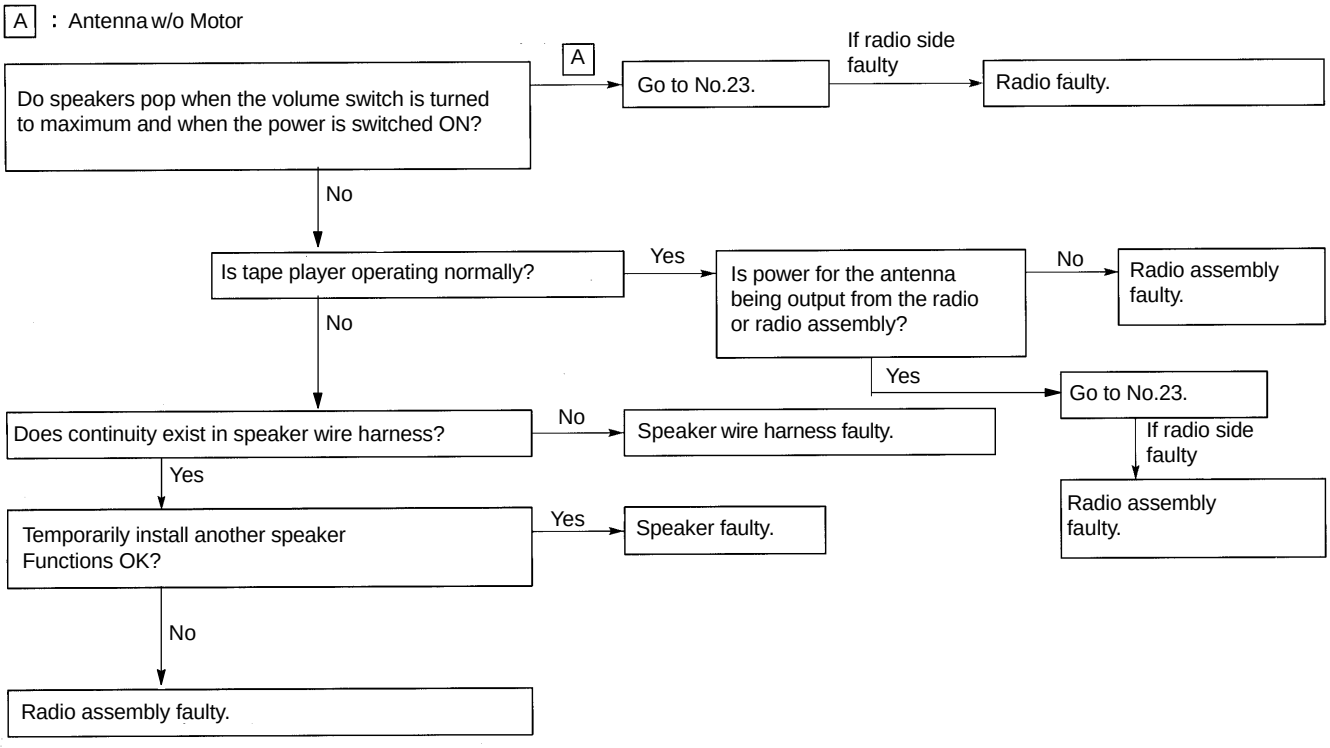

V07430

3	Radio	NOISE PRESENT, BUT AM-FM NOT OPERATING

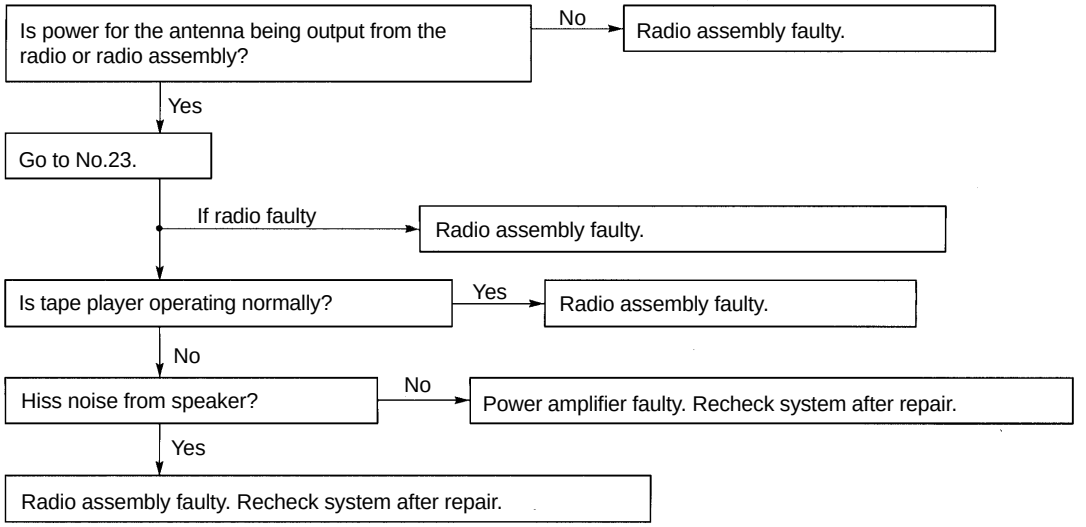

4	Radio	ANY SPEAKER DOES NOT WORK

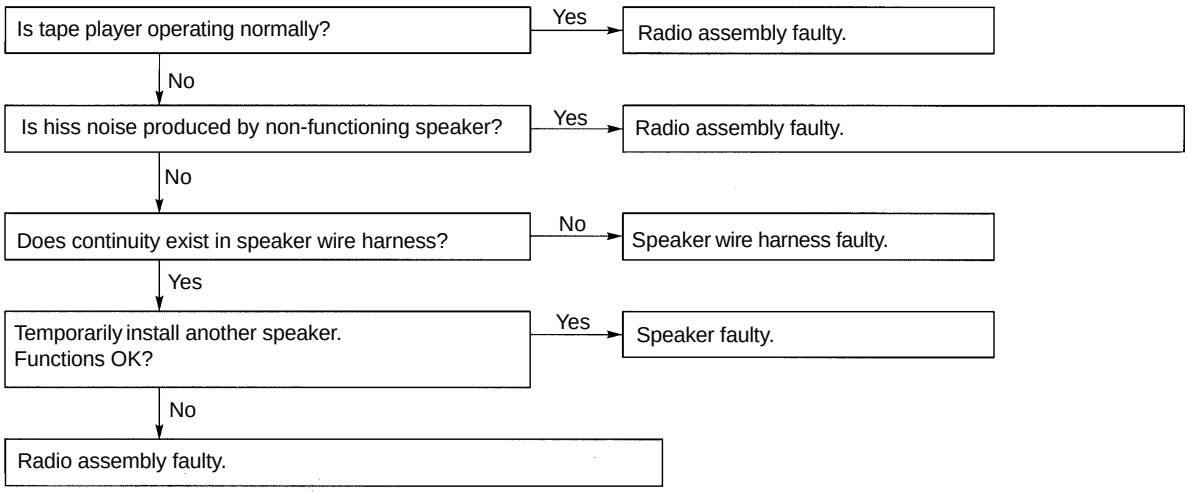

V07431

5	Radio	EITHER AM OR FM DOES NOT WORK, RECEPTION POOR (VOLUME FAINT), FEW PRESET TUNING BANDS

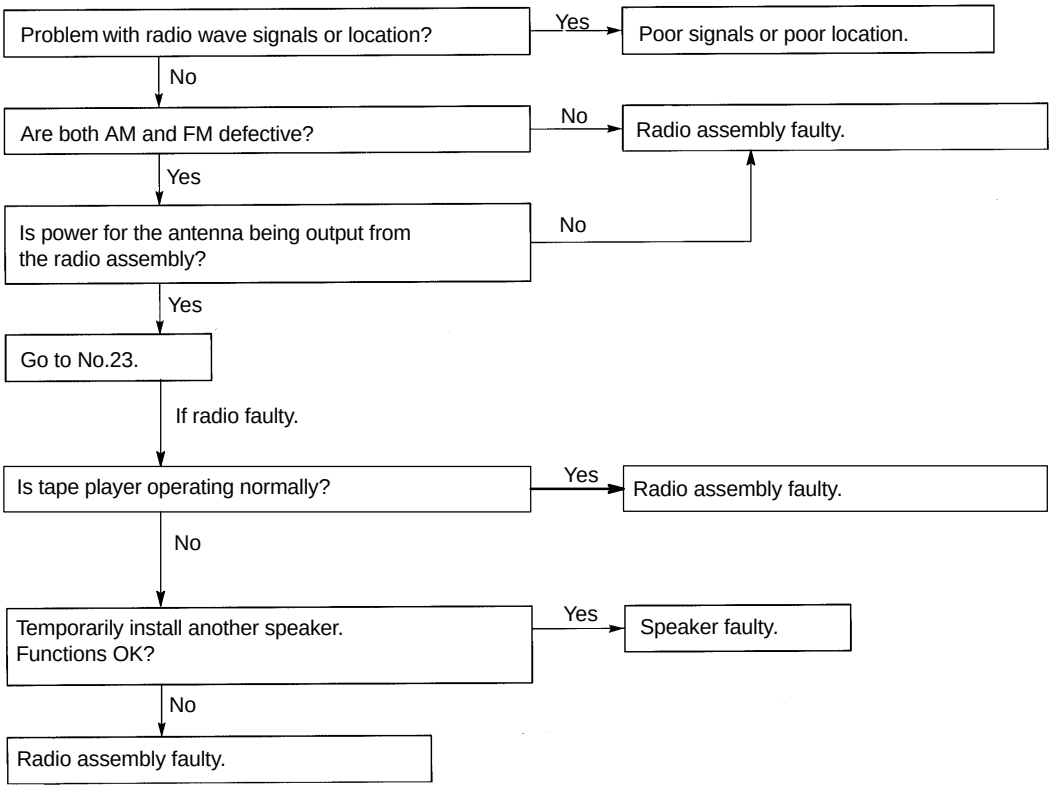

V07432

6	Radio	SOUND QUALITY POOR

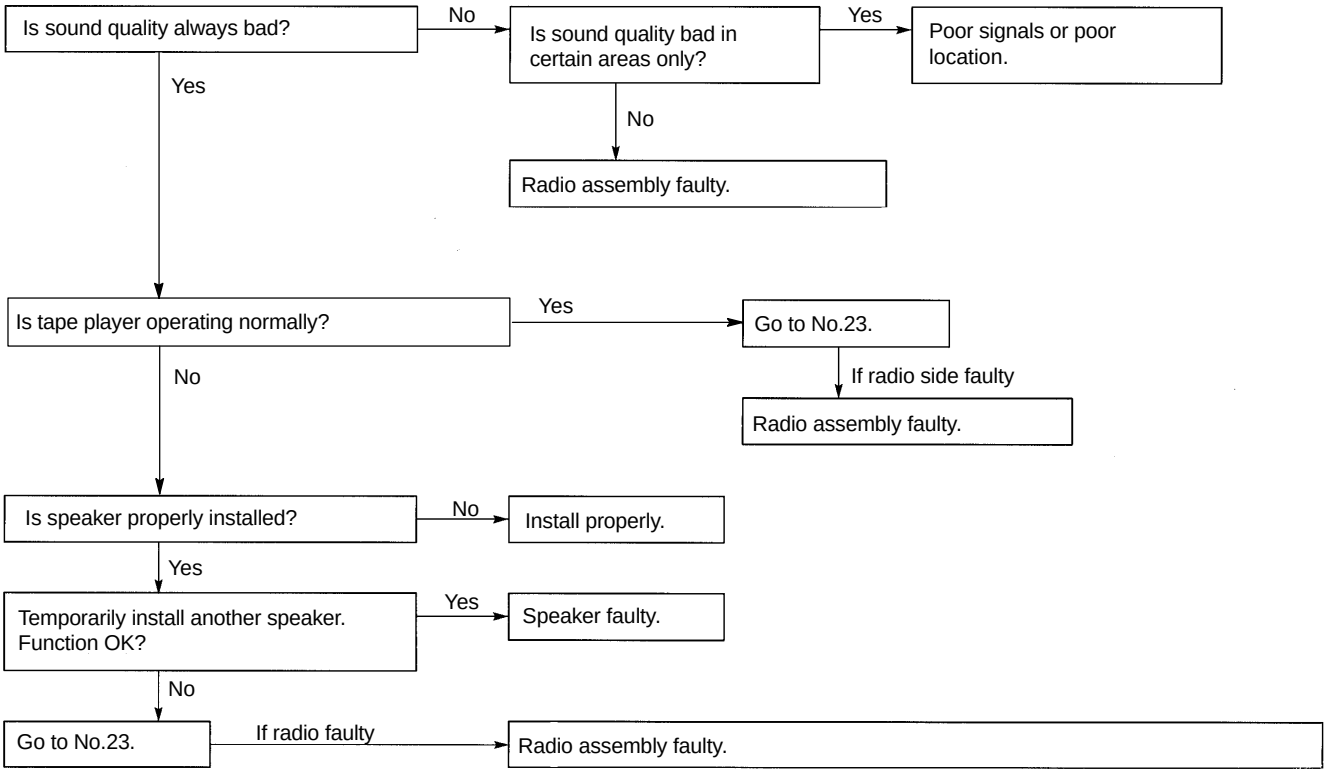

7	Radio	CANNOT SET STATION SELECT BUTTON, PRESET MEMORY DISAPPEARS

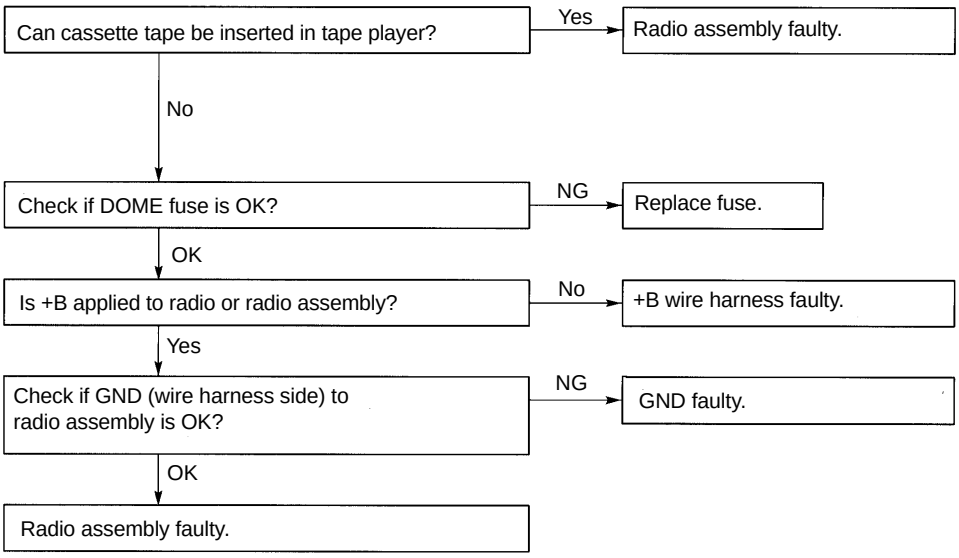

V07433

8 Tape Player — CASSETTE TAPE CANNOT BE INSERTED

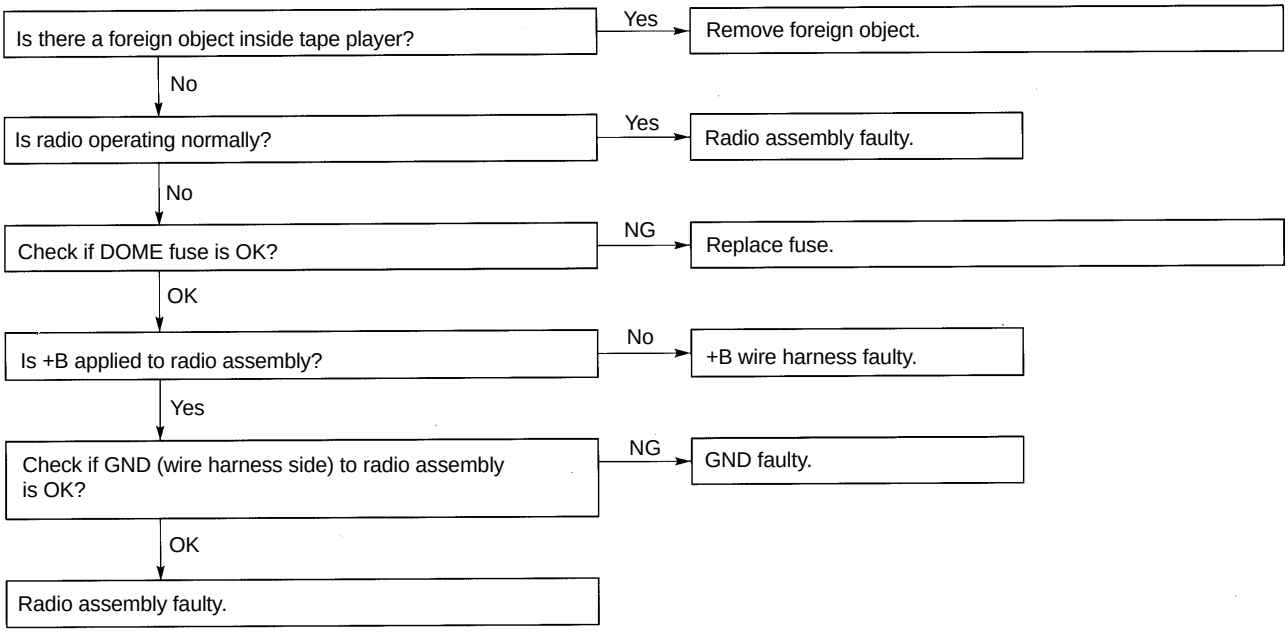

9 Tape Player — CASSETTE TAPE INSERTED, BUT NO POWER

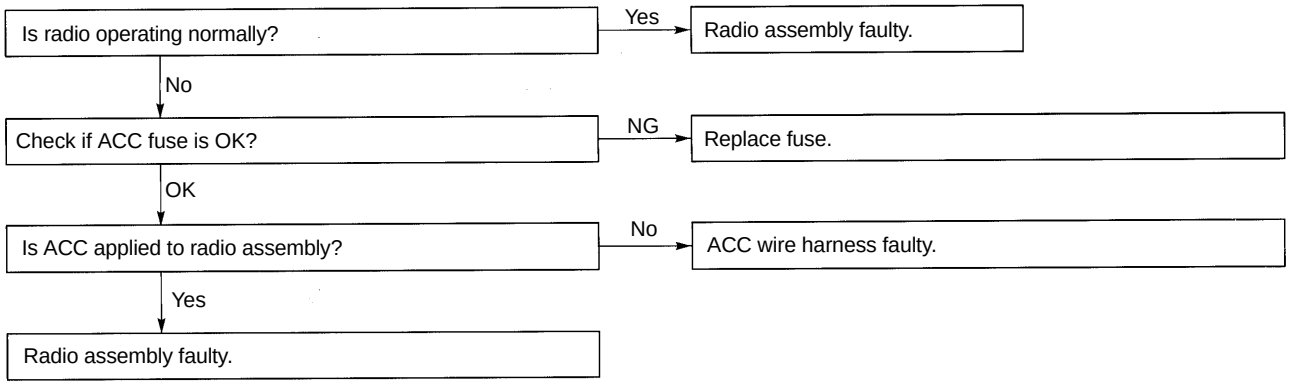

V07434

10	Tape Player	POWER COMING IN, BUT TAPE PLAYER NOT OPERATING

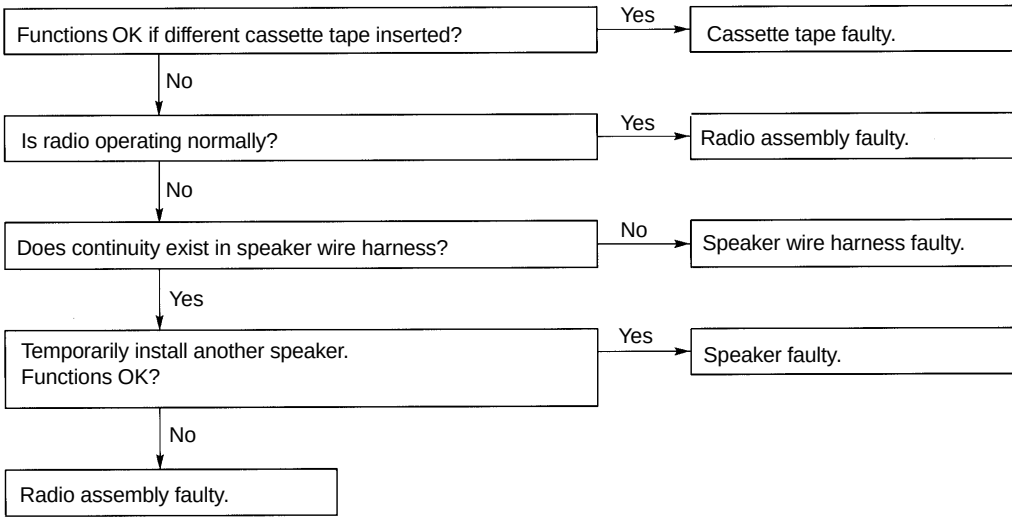

11	Tape Player	ANY SPEAKER DOES NOT WORK

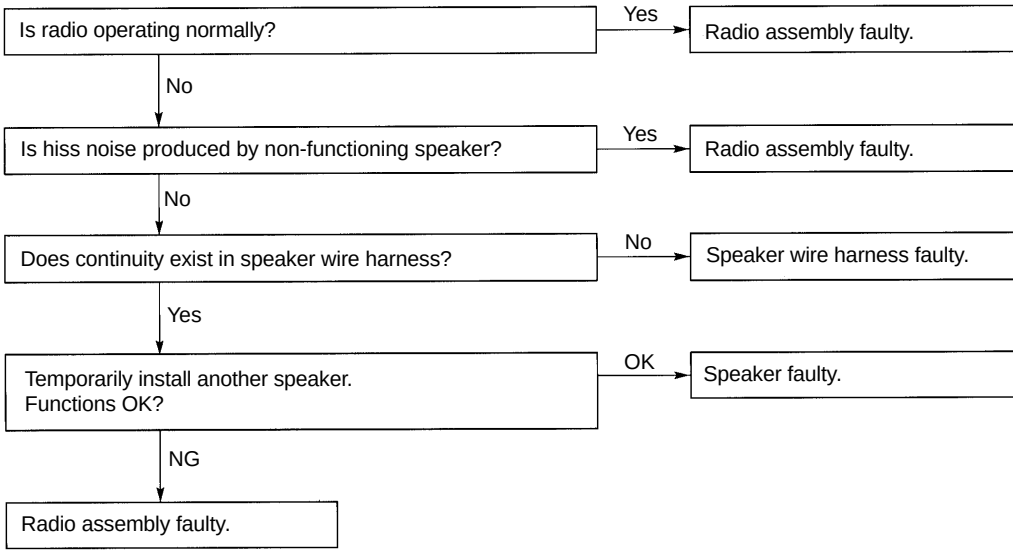

V07435

12	Tape player	SOUND QUALITY POOR (VOLUME FAINT)

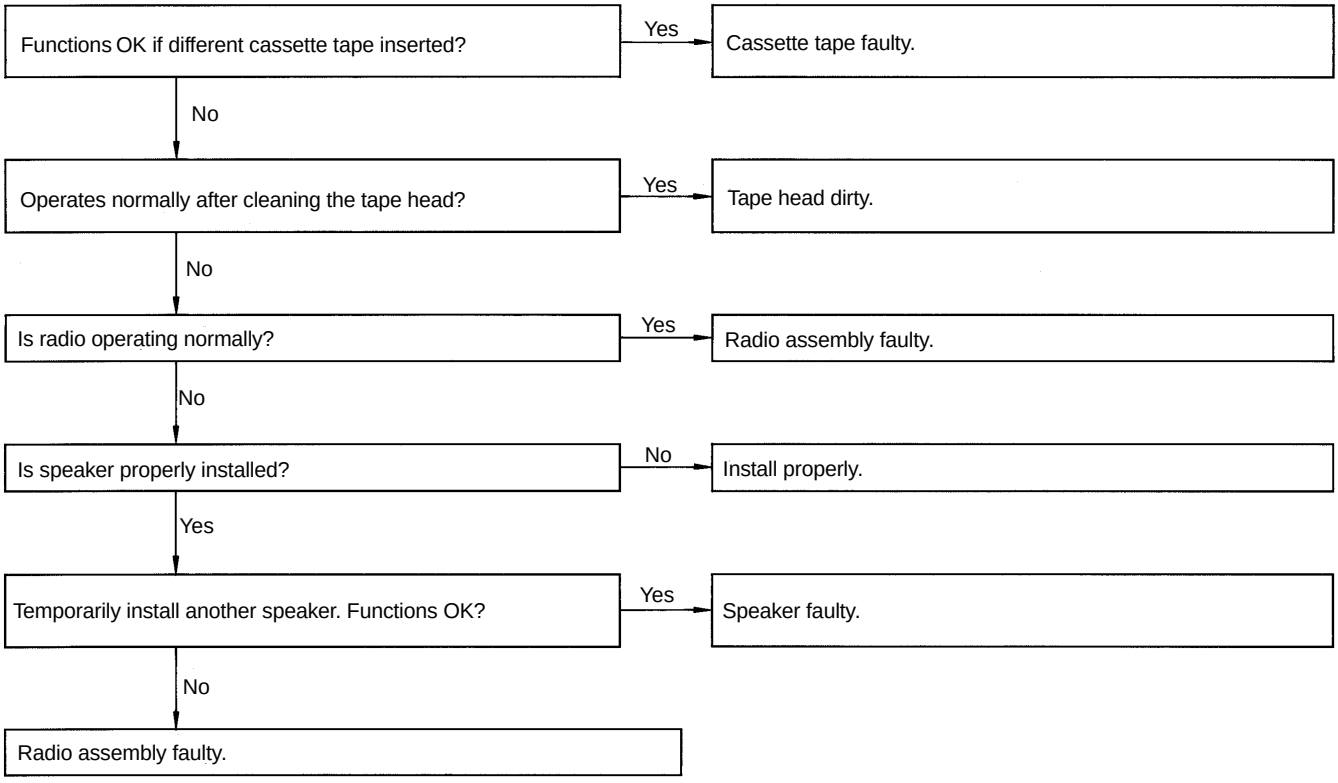

13	Tape Player	TAPE JAMMED, MALFUNCTION WITH TAPE SPEED OR AUTO-REVERSE

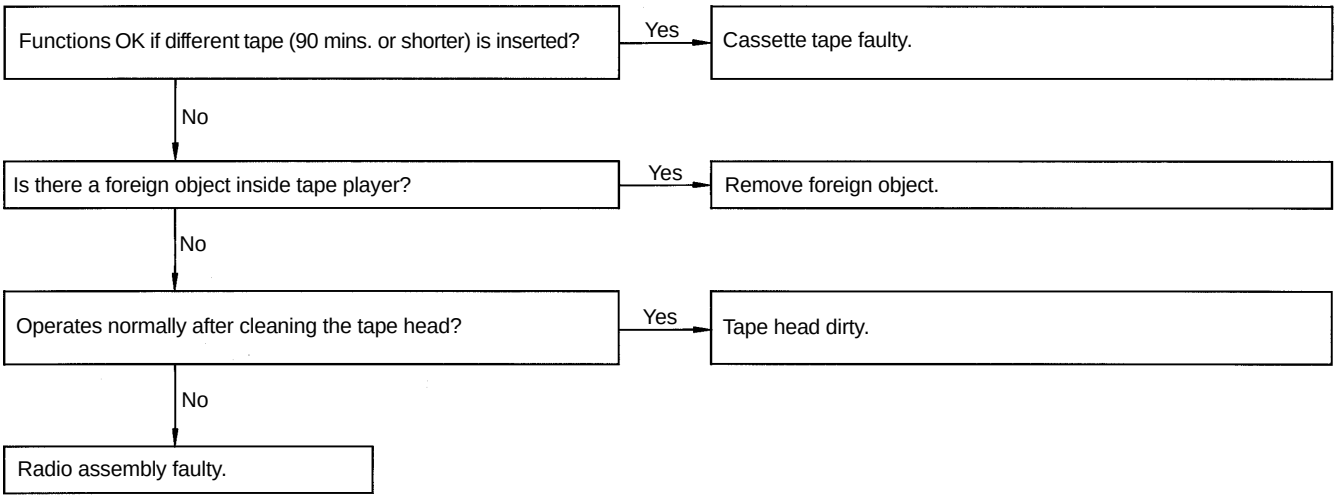

V04922

14	Tape Player	APS, SKIP, RPT BUTTONS NOT OPERATING

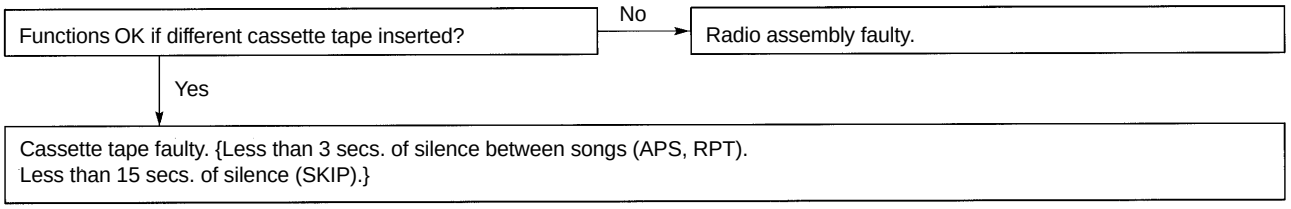

15	Tape Player	CASSETTE TAPE WILL NOT BE EJECTED

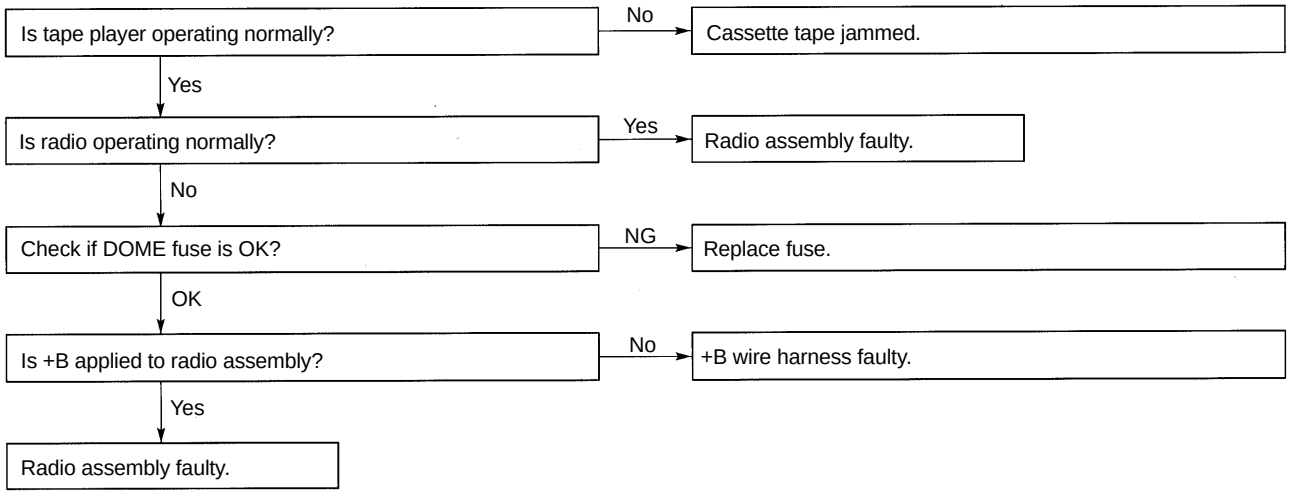

V07436

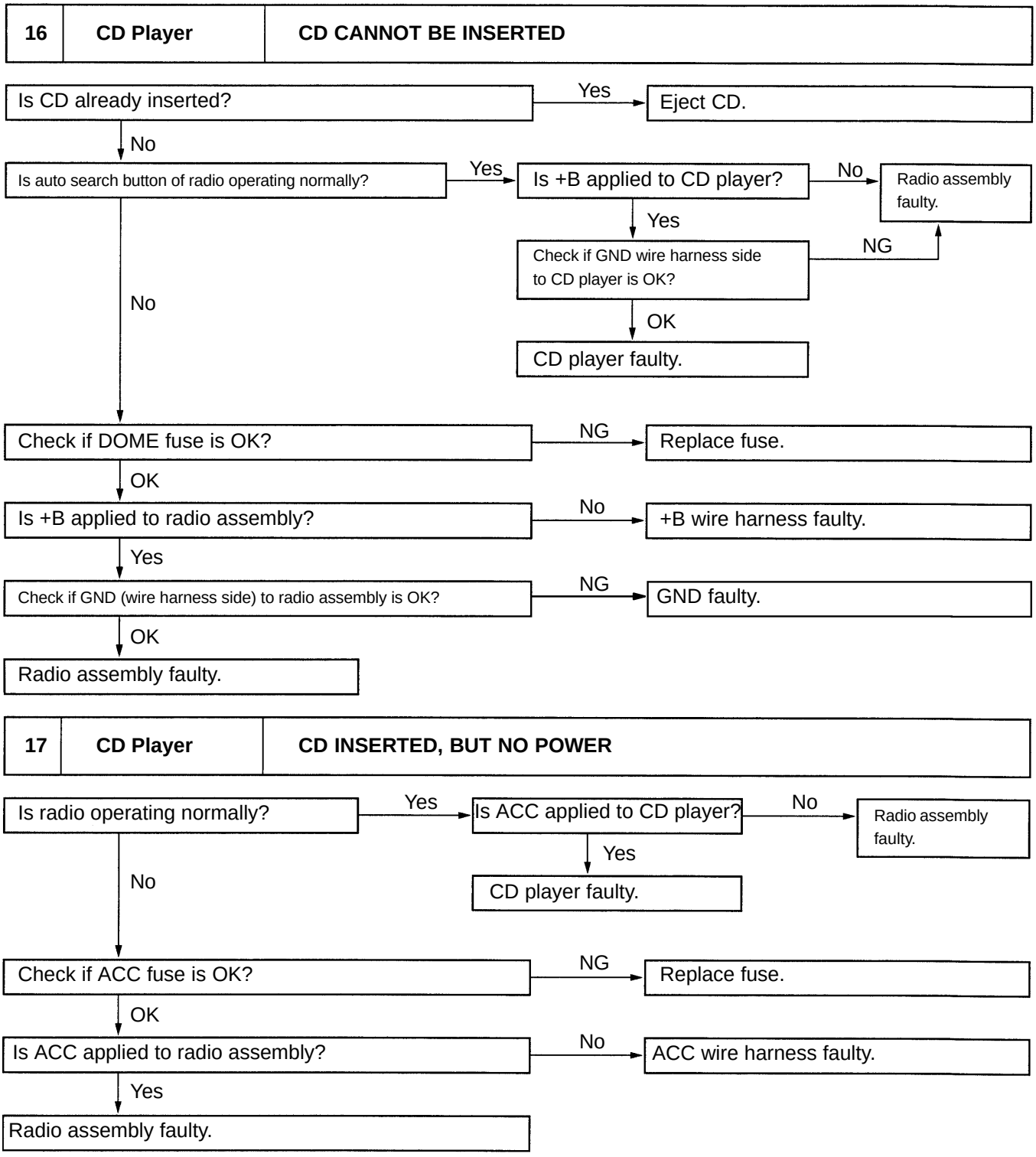
16
CD Player
CD CANNOT BE INSERTED
Is CD already inserted?
Yes
Eject CD.
No
Is auto search button of radio operating normally?
Yes
Is +B applied to CD player?
No
Radio assembly faulty.
Yes
Check if GND wire harness side to CD player is OK?
NG
OK
CD player faulty.
No
Check if DOME fuse is OK?
NG
Replace fuse.
OK
Is +B applied to radio assembly?
No
+B wire harness faulty.
Yes
Check if GND (wire harness side) to radio assembly is OK?
NG
GND faulty.
OK
Radio assembly faulty.
17
CD Player
CD INSERTED, BUT NO POWER
Is radio operating normally?
Yes
Is ACC applied to CD player?
No
Radio assembly faulty.
Yes
CD player faulty.
No
Check if ACC fuse is OK?
NG
Replace fuse.
OK
Is ACC applied to radio assembly?
No
ACC wire harness faulty.
Yes
Radio assembly faulty.

I05488

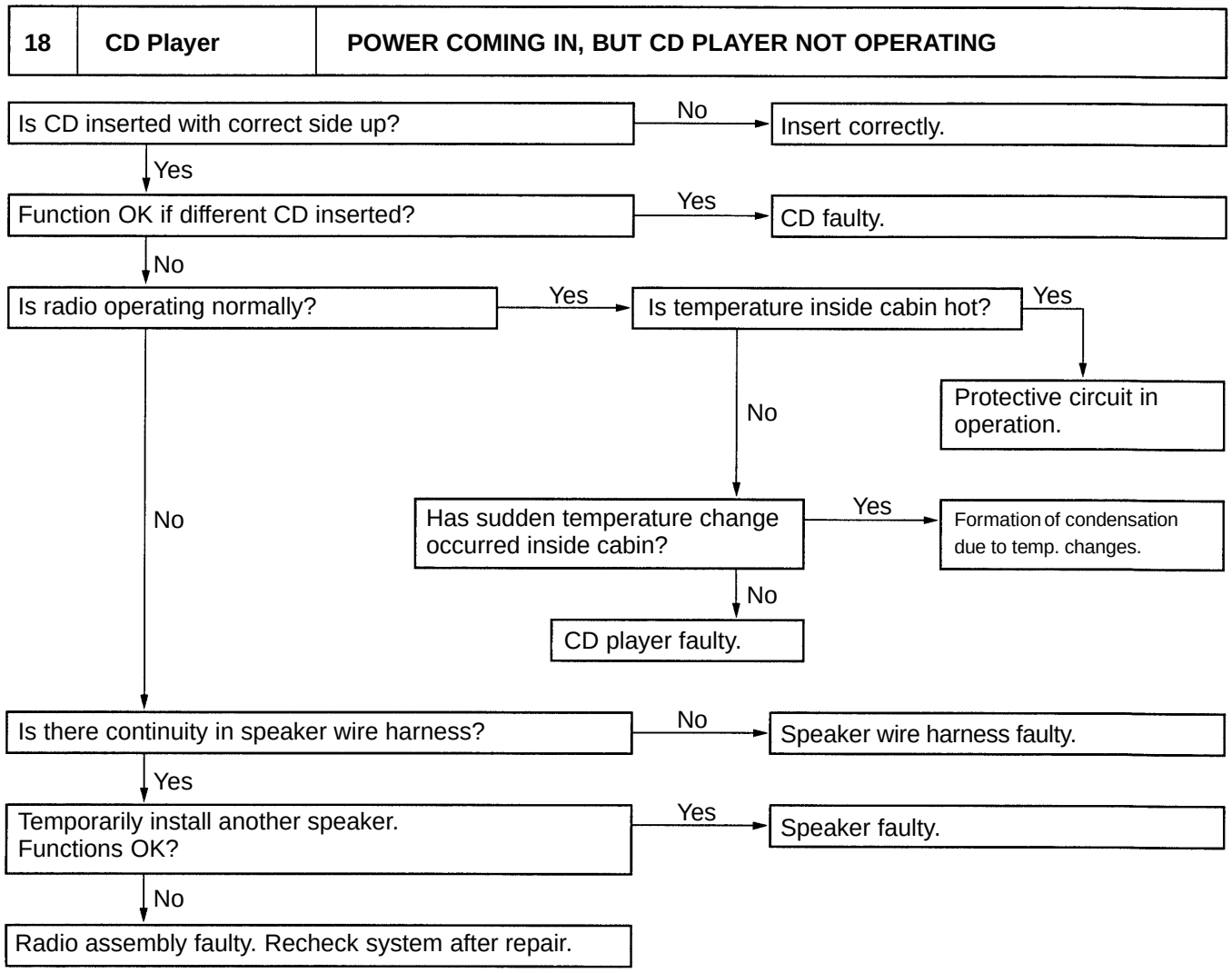
18
CD Player
POWER COMING IN, BUT CD PLAYER NOT OPERATING
Is CD inserted with correct side up?
No
Insert correctly.
Yes
Function OK if different CD inserted?
Yes
CD faulty.
No
Is radio operating normally?
Yes
Is temperature inside cabin hot?
Yes
Protective circuit in operation.
No
No
Has sudden temperature change occurred inside cabin?
Yes
Formation of condensation due to temp. changes.
No
CD player faulty.
Is there continuity in speaker wire harness?
No
Speaker wire harness faulty.
Yes
Temporarily install another speaker. Functions OK?
Yes
Speaker faulty.
No
Radio assembly faulty. Recheck system after repair.

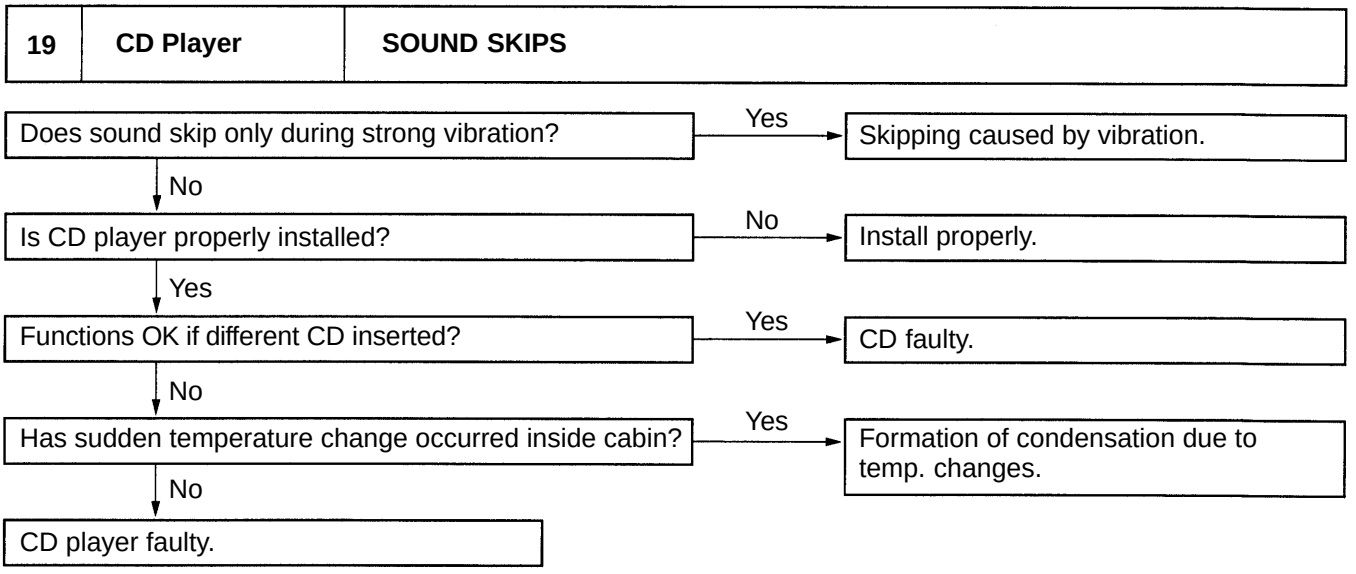
19
CD Player
SOUND SKIPS
Does sound skip only during strong vibration?
Yes
Skipping caused by vibration.
No
Is CD player properly installed?
No
Install properly.
Yes
Functions OK if different CD inserted?
Yes
CD faulty.
No
Has sudden temperature change occurred inside cabin?
Yes
Formation of condensation due to temp. changes.
No
CD player faulty.

I05489

20	CD Player	SOUND QUALITY POOR (VOLUME FAINT)

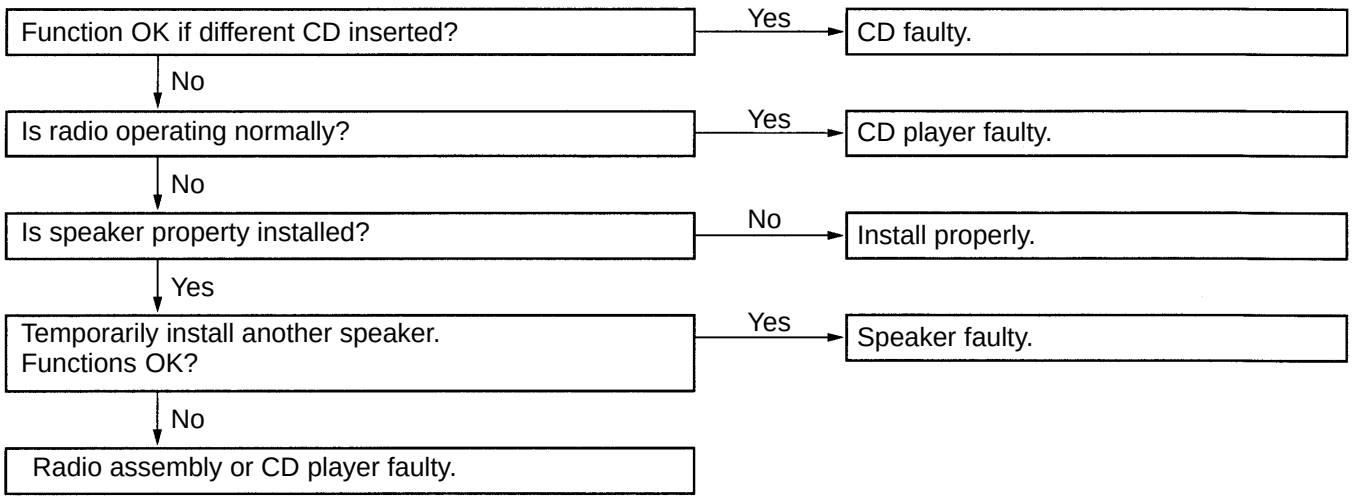

21	CD Player	ANY SPEAKER DOES NOT WORK

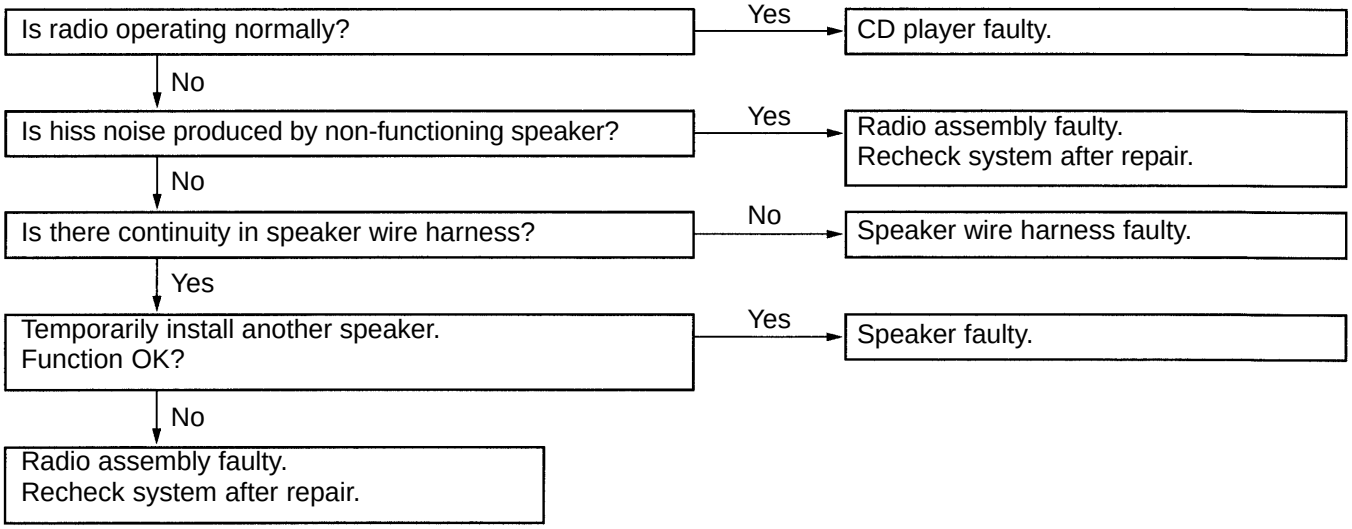

V08551

22	CD Player	CD WILL NOT BE EJECTED

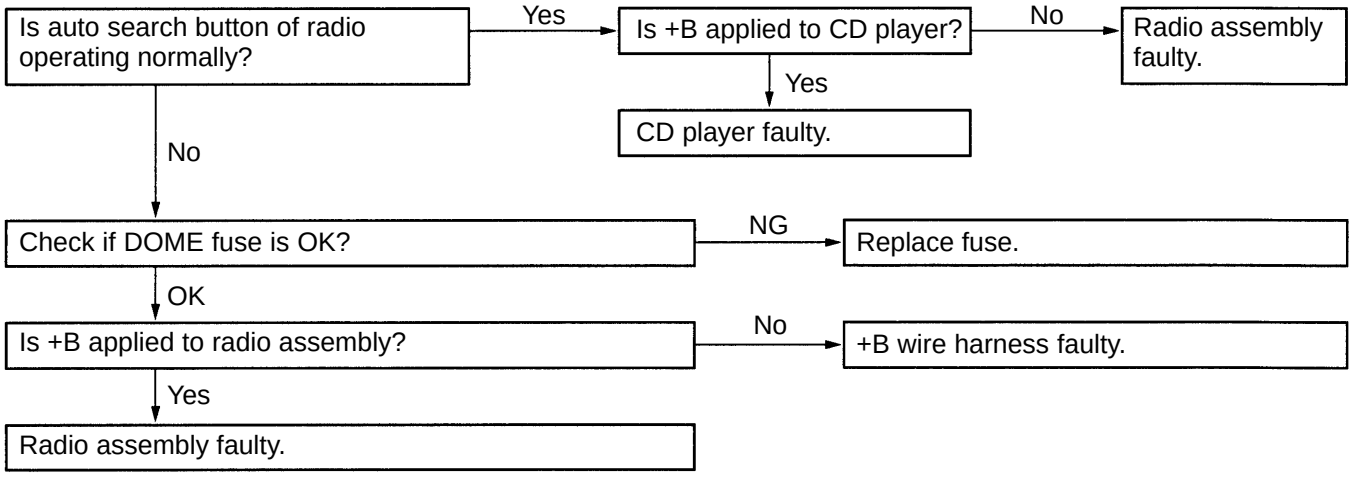

I05490

23	**Antenna**	**ANTENNA-RELA TED**

Is antenna extended.
- No → Extend fully.
- Yes ↓

Temporarily install another antenna. Functions OK?
- Yes → Antenna faulty.
- No ↓

Radio side faulty.

24	**Noise**	**NOISE PRODUCED BY VIBRATION OR SHOCK WHILE DRIVING**

Is speaker properly installed?
- No → Install properly.
- Yes ↓

Is each system correctly installed?
- No → Install properly.
- Yes ↓

With vehicle stationary, lightly tap each system. Is noise produced?
- Yes → Each system faulty.
- No ↓

Noise produced by static electricity accumulating in the vehicle body.

V04924

25	Noise	NOISE PRODUCED WHEN ENGINE STARTS

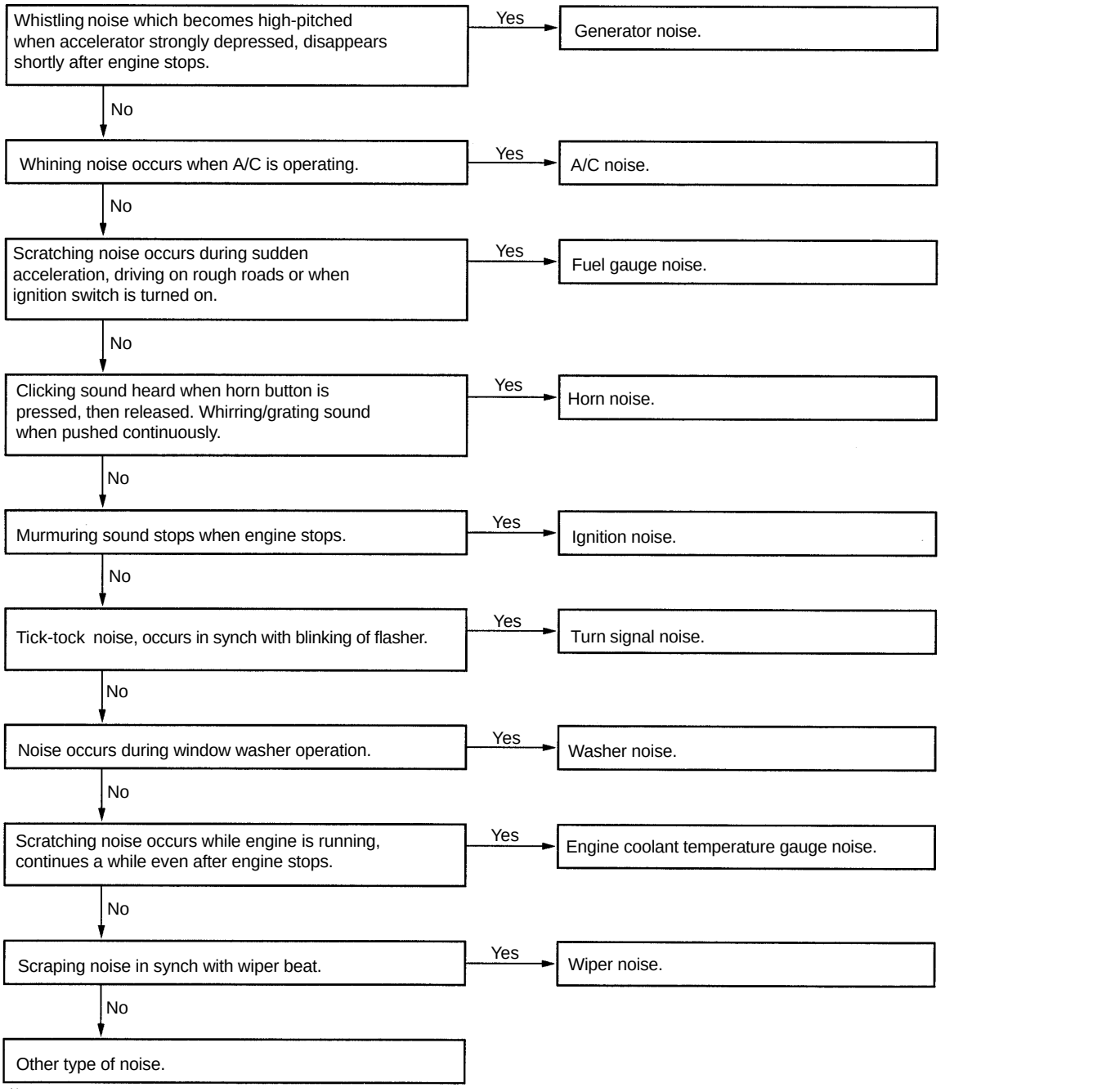

V08467

BODY ELECTRICAL SYSTEM

BE181-02

PRECAUTION

Take care to observe the following precautions when performing inspections or removal and replacement of body electrical related parts.

1. HEADLIGHT SYSTEM

Halogen bulbs have pressurized gas inside and require special handling. They can burst if scratched or dropped. Hold a bulb only by its plastic or metal case. Don't touch the glass part of a bulb with bare hands.

2. SRS (SUPPLEMENTAL RESTRAINT SYSTEM)

The ECHO is equipped with an SRS (Supplemental Restraint System) such as the driver airbag and front passenger airbag. Failure to carry out service operation in the correct sequence could cause the SRS to unexpectedly deploy during servicing, possibly leading to a serious accident. Before servicing (including removal or installation of parts, inspection or replacement), be sure to read the precautionary notices in the RS section.

3. AUDIO SYSTEM

- If the negative (-) terminal cable is disconnected from the battery, the preset AM, FM 1 and FM 2 stations stored in memory are erased, so make sure to note the stations and reset them after the negative (-) terminal cable is reconnected to the battery.
- If the negative (-) terminal cable is disconnected from the battery, the "ANTI-THEFT SYSTEM" will operate when the cable is reconnected, but the radio, tape player and CD player will not operate. Be sure to input the correct ID number so that the radio, tape player and CD player can be operated again.

4. MOBILE COMMUNICATION SYSTEM

If the vehicle is equipped with a mobile communication system, refer to precautions in the IN section.

BE020-05

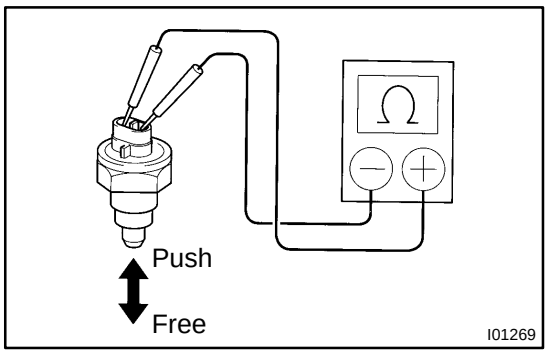

INSPECTION

1. M/T:

INSPECT BACK-UP LIGHT SWITCH CONTINUITY

Switch position	Specified condition
Push	Continuity
Free	No continuity

If continuity is not as specified, replace the switch.

2. A/T:

INSPECT PARK/NEUTRAL POSITION SWITCH CONTINUITY (See page DI-189)

BACK-UP LIGHT SYSTEM

BE18K-03

LOCATION

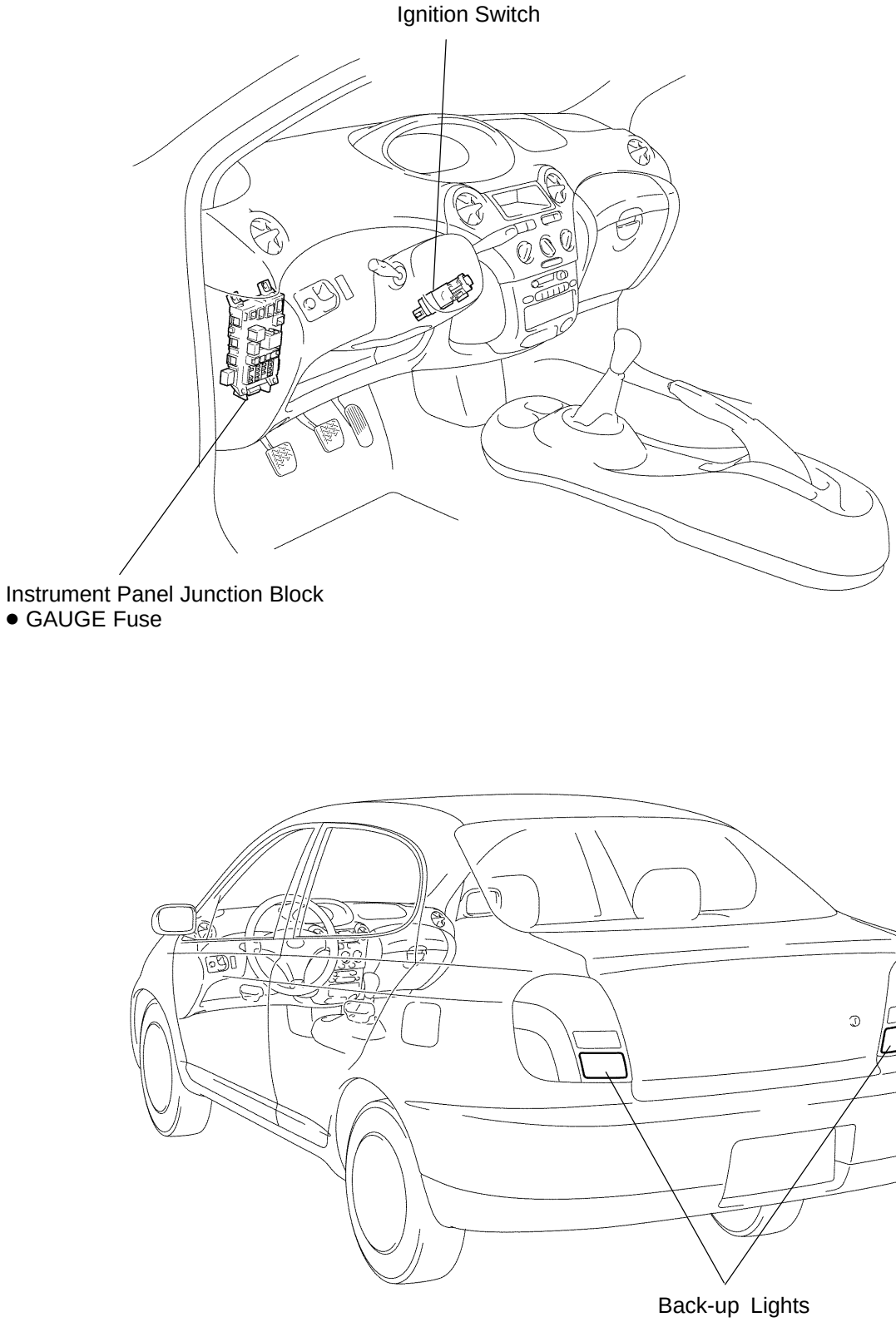

P

I12813

CLOCK

TROUBLESHOOTING

BE066-04

HINT:

Troubleshoot the clock according to the table below.

Clock will not operate	1
Clock loses or gains time	2

± 1.5 seconds / day

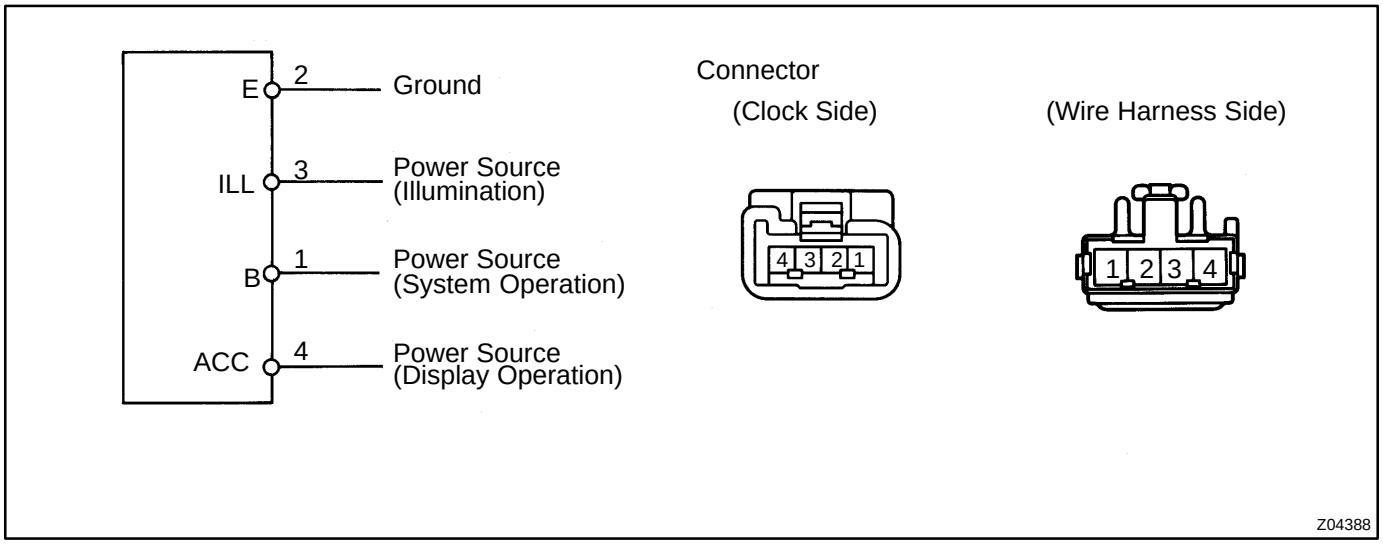

1	CLOCK WILL NOT OPERATE

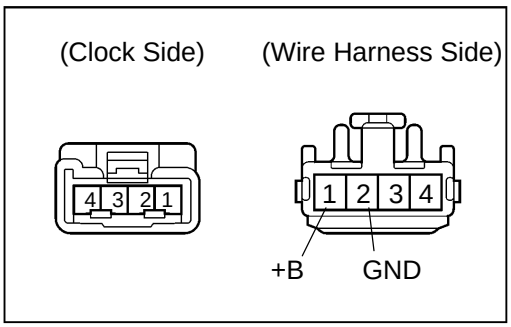

(a) Check that the battery positive voltage is 10 -14 V.
If voltage is not as specified, replace the battery.

(b) Check that the DOME fuse is not blown.
If the fuse is blown, replace the fuse and check for short circuit.

(c) Troubleshoot the clock as follows.
HINT:
Inspect the connector on the wire harness side.

Is there battery positive voltage between terminal +B and body ground?
- No → Open or short circuit in wire harness between terminal +B and DOME fuse.
- Yes ↓

Does continuity exist between terminal GND and body ground?
- No → Open circuit in wire harness between terminal GND and body ground.
- Yes ↓

Replace clock.

I01417

2	CLOCK LOSES OR GAINS TIME

(Clock Side)

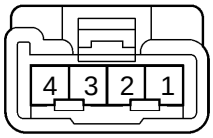

(Wire Harness Side)

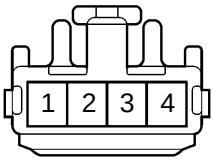

(a) Check that the battery positive voltage is 10-16 V.
If voltage is not as specified, replace the battery.

(b) Inspect the error of the clock.
Allowable error (per day): ± 1.5 sec.
If the error exceeds the allowable error, replace the clock.

(c) Check that the clock adjusting button is caught in position, and does not return.
If the button is not returned, repair or replace the clock.

(d) Troubleshoot the clock as follows.
HINT:
Inspect the connector on the wire harness side.

Is there 10 - 16 V between terminal +B and body ground?

Below 10V → Detect cause and repair, or recharge battery.

Yes ↓

Adjust or replace clock.

I01418

BE1F9-02

CIRCUIT

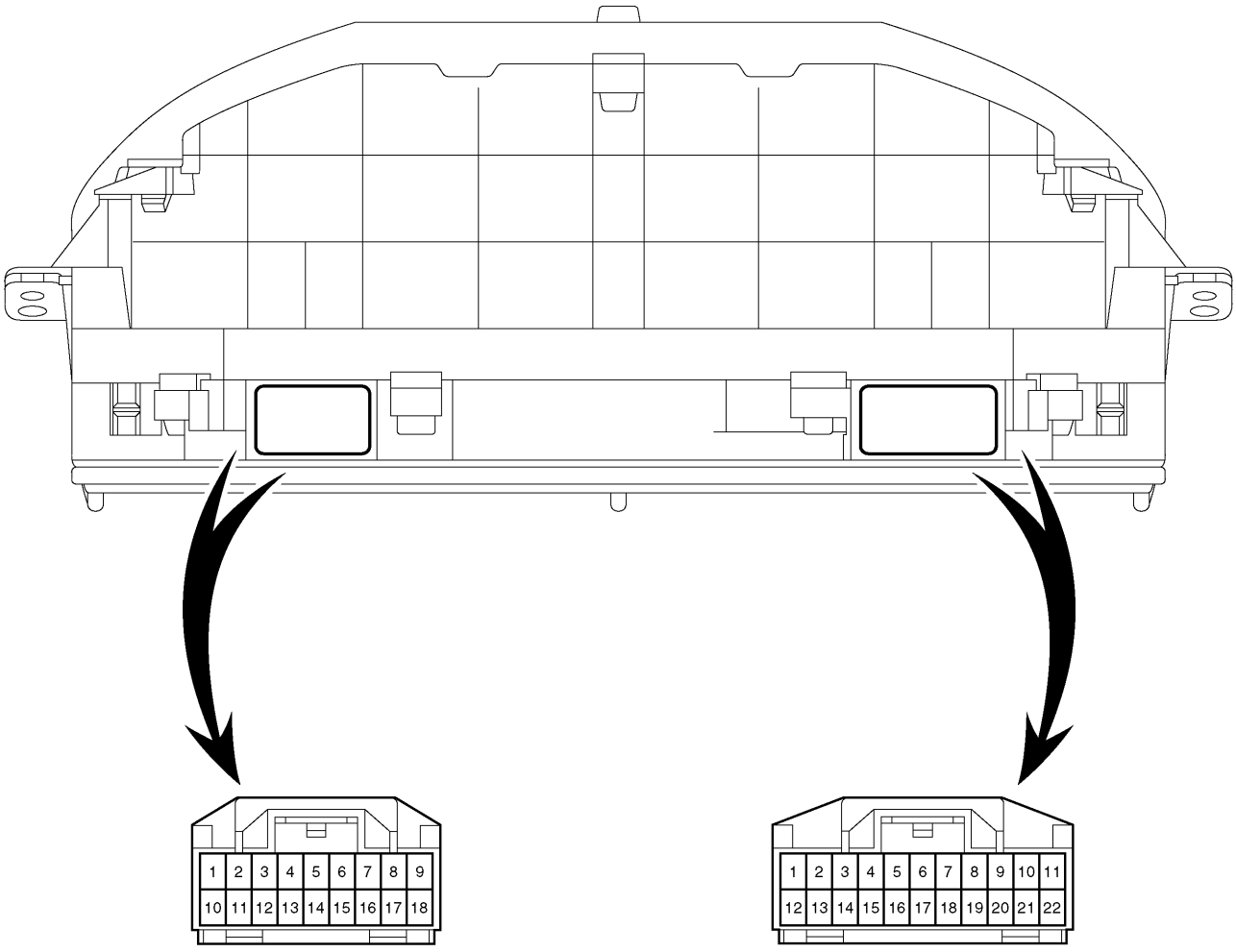

Connector ”B”

Connector ”A”

N

I12359

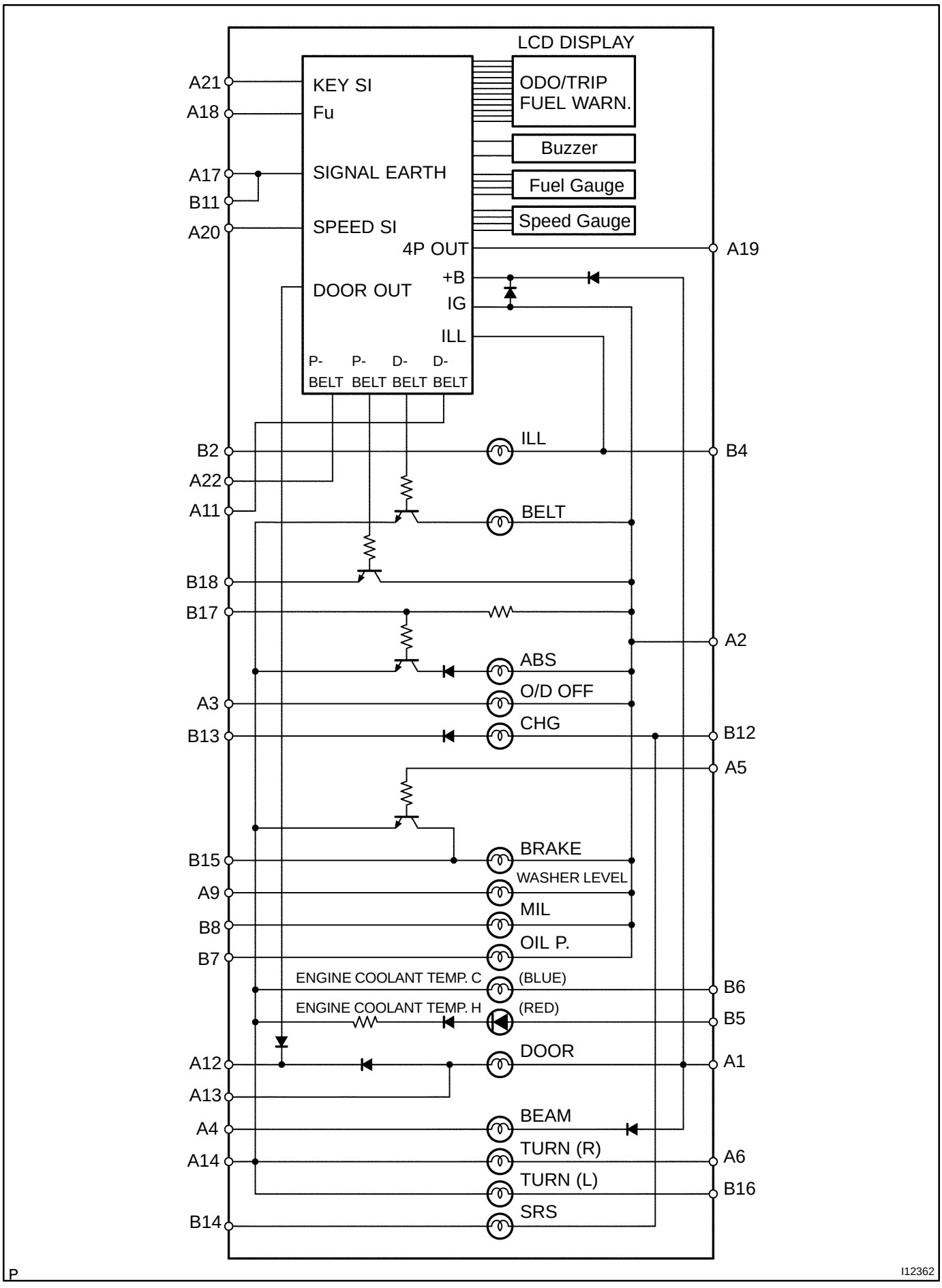
LCD DISPLAY
A21
KEY SI
ODO/TRIP
FUEL WARN.
A18
Fu
Buzzer
A17
SIGNAL EARTH
Fuel Gauge
B11
Speed Gauge
A20
SPEED SI
4P OUT
A19
+B
DOOR OUT
IG
ILL
P-
BELT
P-
BELT
D-
BELT
D-
BELT
B2
ILL
B4
A22
A11
BELT
B18
B17
A2
ABS
O/D OFF
A3
CHG
B13
B12
A5
B15
BRAKE
WASHER LEVEL
A9
MIL
B8
OIL P.
B7
ENGINE COOLANT TEMP. C
(BLUE)
B6
ENGINE COOLANT TEMP. H
(RED)
B5
DOOR
A12
A1
A13
BEAM
A4
TURN (R)
A14
A6
TURN (L)
B16
SRS
B14
P
I12362

No.		Wire Harness Side
A	1	DOME Fuse
	2	GAUGE Fuse
	3	O/D Off Switch
	4	Headlight Dimmer Switch
	5	Starter Relay
	6	Turn Signal Switch (Right)
	9	Window Washer Level Warning Switch
	11	Driver's Buckle Switch
	12	Driver Door Courtesy Switch
	13	Except Driver Door Courtesy Switch
	14	Ground
	17	Ground
	18	Fuel Sender Gauge
	19	Speed Control Unit
	20	Vehicle Speed Sensor (SI terminal)
	21	Key Unlock Warning Switch
	22	Passenger's Buckle Switch
B	2	Light Control Rheostat Volume
	4	Light Control Switch
	5	ECM
	6	ECM
	7	Low Oil Pressure Warning Switch
	8	ECM
	11	Vehicle Speed Sensor (SE terminal)
	12	Ignition Switch
	13	Generator
	14	Airbag Sensor Assembly
	15	Brake Fluid Level Warning Switch
	16	Turn Signal Switch (Left)
	17	ABS ECU
	18	Passenger's Seat Belt Warning

BE1FA-01

INSPECTION

1. Connector connected:

INSPECT COMBINATION METER CIRCUIT

Connect the connector ”A” and ”B” to the combination meter and inspect the wire harness side connectors from the back side as shown in the table.

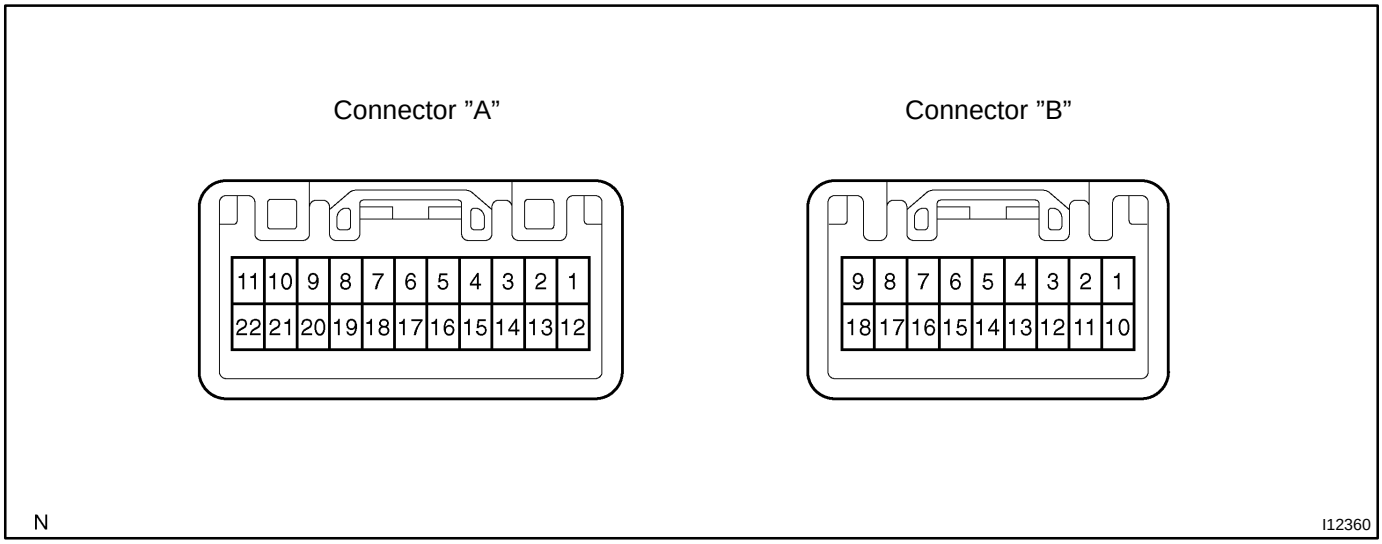

Tester connection	Condition	Specified condition
A1 - Ground	Constant	Battery positive voltage
A2 - Ground	Ignition switch OFF	No voltage
A2 - Ground	Ignition switch ON	Battery positive voltage
A3 - Ground	Ignition switch ON and O/D off switch ON	No voltage
A3 - Ground	Ignition switch ON and O/D off switch OFF	Battery positive voltage
A4 - Ground	Light control switch OFF	No voltage
A4 - Ground	Light control switch HI	Battery positive voltage
A5 - Ground	Ignition switch OFF, LOCK or ACC	No voltage
A5 - Ground	Ignition switch ST	Battery positive voltage
A6 - Ground	Ignition switch ON and turn signal switch OFF or LEFT	No voltage
A6 - Ground	Ignition switch ON and turn signal switch RIGHT	Battery positive voltage
A9 - Ground	Ignition switch ON and window washer level warning switch float DOWN	No voltage
A9 - Ground	Ignition switch ON and window washer level warning switch float UP	Battery positive voltage
A11 - Ground	Ignition switch ON and driver’s seat belt is unfastened	No voltage
A11 - Ground	Ignition switch ON and driver’s seat belt is fasted	Battery positive voltage
A12 - Ground	Ignition switch ON and driver door is opened	No voltage
A12 - Ground	Ignition switch ON and driver door is closed	Battery positive voltage

A13 - Ground	Ignition switch ON and passenger door is opened	No voltage
A13 - Ground	Ignition switch ON and passenger door is closed	Battery positive voltage
A14 - Ground	Constant	Continuity
A17 - Ground	Constant	Continuity
A18 - Ground	Ignition switch ON and fuel sender gauge float UP	0.3 - 0.6 V
A18 - Ground	Ignition switch ON and fuel sender gauge float DOWN	4.9 - 6.9 V
A19 - Ground	Ignition switch ON and slowly move the wheel	4.5 - 5.5 V
A20 - Ground	Ignition switch ON and slowly move the wheel	Battery positive voltage
A21 - Ground	Key unlock warning switch ON (Key is inserted)	No voltage
A21 - Ground	Key unlock warning switch OFF (Key is removed)	Battery positive voltage
A22 - Ground	Ignition switch ON and passenger's seat belt is unfastened	No voltage
A22 - Ground	Ignition switch ON and passenger's seat belt is fasted	Battery positive voltage
B2 - Ground	Ignition switch ON and rheostat light control volume CANCEL position	No voltage
B2 - Ground	Ignition switch ON and rheostat light control volume maximum	Battery positive voltage
B4 - Ground	Light control switch OFF	No voltage
B4 - Ground	Light control switch TAIL or HEAD	Battery positive voltage
B5 - Ground	Ignition switch ON and engine coolant temperature HOT (Red) warning light light up	No voltage
B5 - Ground	Ignition switch ON and engine coolant temperature HOT (Red) warning light does not light up	Battery positive voltage
B6 - Ground	Ignition switch ON and engine coolant temperature COOL (Blue) warning light light up	No voltage
B6 - Ground	Ignition switch ON and engine coolant temperature COOL (Blue) warning light does not light up	Battery positive voltage
B7 - Ground	Ignition switch ON and engine oil level warning light up	No voltage
B7 - Ground	Ignition switch ON and engine oil level warning does not light up	Battery positive voltage
B8 - Ground	Ignition switch ON and engine is stopped	No voltage
B8 - Ground	Ignition switch ON and engine is running	Battery positive voltage
B11 - Ground	Constant	Continuity
B12 - Ground	Ignition switch OFF	No voltage
B12 - Ground	Ignition switch ON	Battery positive voltage
B13 - Ground	Ignition switch ON and engine is stopping	No voltage
B13 - Ground	Ignition switch ON and engine is running	Battery positive voltage
B14 - Ground	Ignition switch ON and SRS indicator light light up	No voltage
B14 - Ground	Ignition switch ON and SRS indicator does not light up	Battery positive voltage
B15 - Ground	Ignition switch ON, parking brake lever is released and brake fluid level warning switch float DOWN	No voltage

B15 - Ground	Ignition switch ON, parking brake lever is released and brake fluid level warning switch float UP	Battery positive voltage
B16 - Ground	Ignition switch ON and turn signal switch OFF or RIGHT	No voltage
B16 - Ground	Ignition switch ON and turn signal switch LEFT	Battery positive voltage
B17 - Ground	Ignition switch ON and ABS is error	No voltage
B17 - Ground	Ignition switch ON and ABS is normal	Battery positive voltage
B18 - Ground	Ignition switch ON and passenger's seat belt warning light up	No voltage
B18 - Ground	Ignition switch ON and passenger's seat belt warning does not light up	Battery positive voltage

If circuit is not as specified, wiring diagram and inspect the circuits connected to other parts.

2. INSPECT SPEEDOMETER ON-VEHICLE

Using a speedometer tester, inspect the speedometer for allowable indication error and check the operation of the odometer.
HINT:
Tire wear and tire over or under inflation will increase the indication error.

USA (mph)		CANADA (km/h)	
Standard indication	Allowable range	Standard indication	Allowable range
20	18 - 24	20	17 - 24
40	38 - 44	40	38 - 46
60	58 - 66	60	57.5 - 67
80	78 - 88	80	77 - 88
100	98 - 110	100	96 - 109
		120	115 - 130
		140	134 - 151.5
		160	153 - 173

If error is excessive, replace the speedometer.

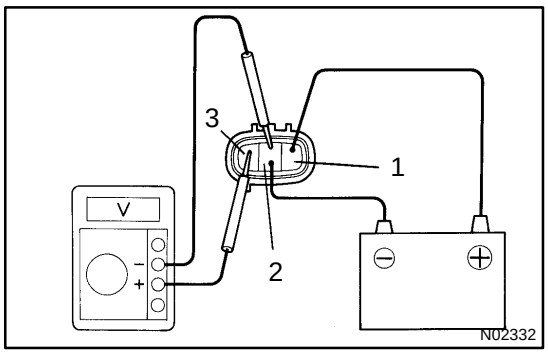

3. INSPECT VEHICLE SPEED SENSOR OPERATION

(a) Connect the positive (+) lead from battery to terminal 1 and negative (-) lead to terminal 2.
(b) Connect the positive (+) lead from tester to terminal 3 and the negative (-) lead to terminal 2.
(c) Rotate the shaft.
(d) Check that there is voltage change from approx. 0 V to 11 V or more between terminals 2 and 3.

HINT:
The voltage change should be 4 times for every revolution of the speed sensor shaft.
If operation is not as specified, replace the sensor.

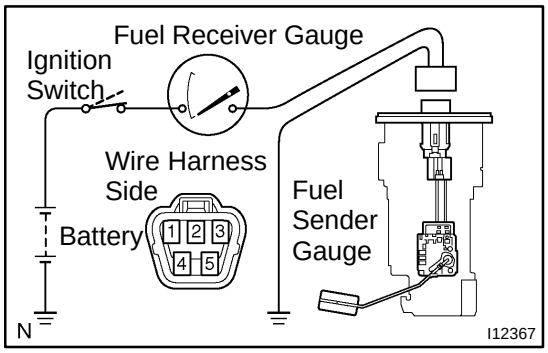

4. INSPECT FUEL RECEIVER GAUGE OPERATION

(a) Disconnect the connector from the sender gauge.
(b) Turn the ignition switch ON, check that the receiver gauge needle indicates EMPTY.

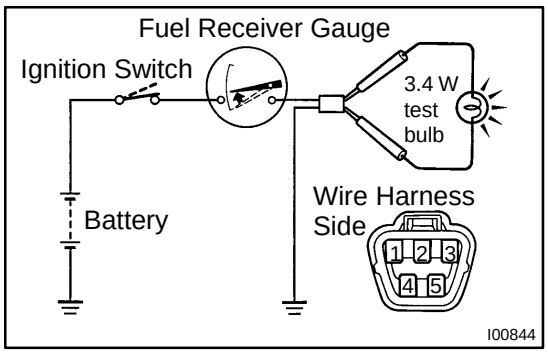

(c) Connect terminals 2 and 3 on the wire harness side connector through a 3.4 W test bulb.
(d) Turn the ignition switch ON, check that the bulb lights up and the receiver gauge needle moves towards the full side.

HINT:
Because of the silicon oil in the gauge, it will take a short time for needle to stabilize.
If operation is not as specified, inspect the receiver gauge resistance.

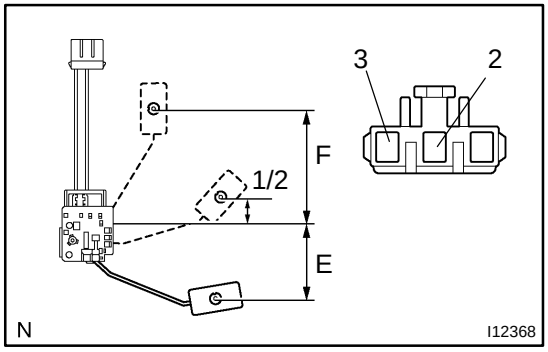

5. INSPECT FUEL SENDER GAUGE RESISTANCE

Measure the resistance between terminals 2 and 3 for each float position.

Float position mm (in.)	Resistance (Ω)
F: Approx. 83.8 (3.30) ± 3 (0.12)	Approx. 4.0 ± 1
1/2: Approx. 18.9 (0.74) ± 3 (0.12)	Approx. 55.0 ± 3
E: Approx. 55.2 (2.17) ± 3 (0.12)	Approx. 107.0 ± 1

If resistance value is not as specified, replace the sender gauge.

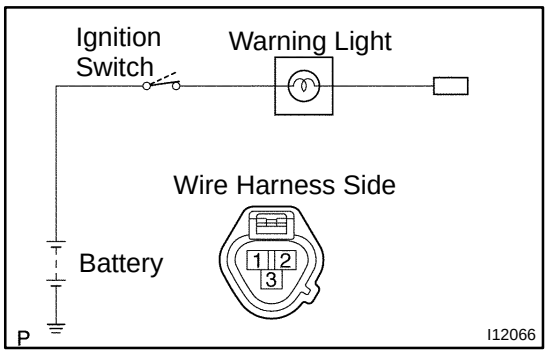

6. INSPECT ENGINE COOLANT TEMPERATURE RECEIVER GAUGE WARNING LIGHT

(a) Disconnect the connector from the sender gauge.

(b) Turn the ignition switch ON and check that the COOL warning light lights up.

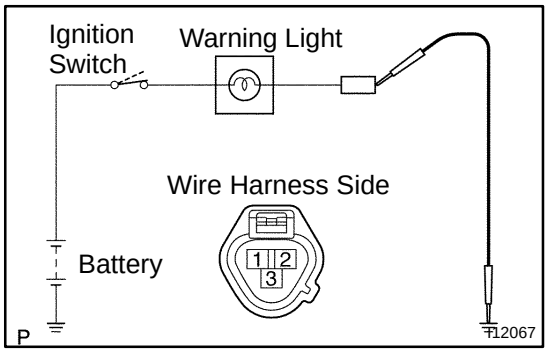

(c) Ground terminal 2 on the wire harness side, and check that the HOT warning light lights up.

If operation is as specified, replace the sender gauge.

Then recheck the system.

If operation is not as specified, measure the receiver gauge resistance.

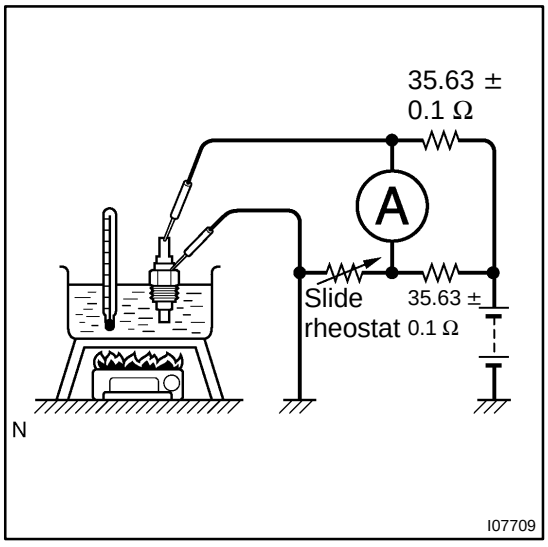

7. INSPECT ENGINE COOLANT TEMPERATURE SENDER GAUGE RESISTANCE

Connect the wire harness as shown in the illustration, and adjust the ammeter pointer to indicate ”0” using the slide rheostat, then read the rheostat indication.

Temperature ˚C (˚F)	Resistance (Ω)
50 (122.0)	160 - 240
120 (248.0)	17.1 - 21.2

If resistance value is not as specified, replace the engine coolant temperature sender gauge.

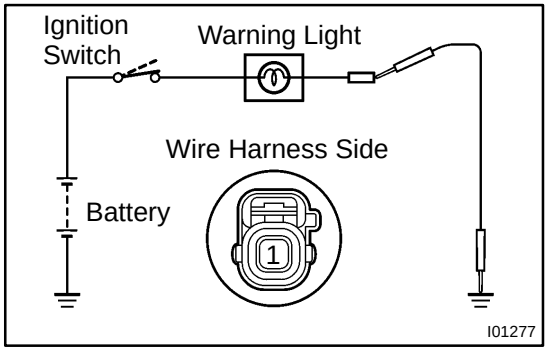

8. INSPECT LOW OIL PRESSURE WARNING LIGHT

(a) Disconnect the connector from the warning switch and ground terminal on the wire harness side connector.

(b) Turn the ignition switch ON and check that the warning light lights up.

If the warning light does not light up, test the bulb.

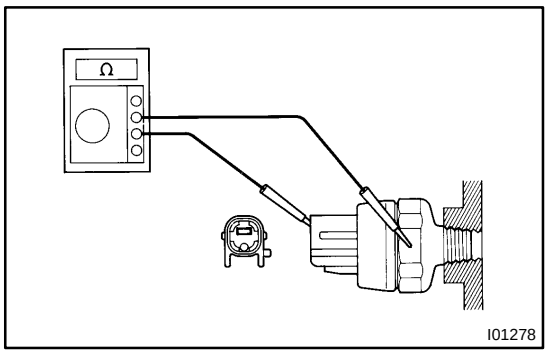

9. INSPECT LOW OIL PRESSURE SWITCH CONTINUITY

(a) Disconnect the connector from the switch.
(b) Check that continuity exists between terminal and ground with the engine stopped.
(c) Check that no continuity exists between terminal and ground with the engine running.

HINT:
Oil pressure should be over 24.5 kPa (0.25 kgf/cm^2, 3.55 psi).
If operation is not as specified, replace the switch.

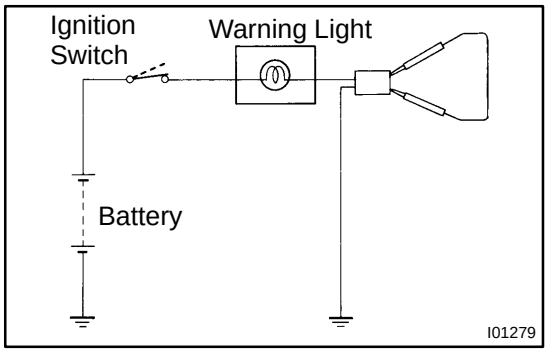

10. INSPECT BRAKE WARNING LIGHT

(a) Disconnect the connector from the brake fluid warning switch.
(b) Release the parking brake pedal.
(c) Connect the terminals on the wire harness side of the level warning switch connector.
(d) Start the engine, check that the warning light lights up.

If the warning light does not light up, test the bulb or wire harness.

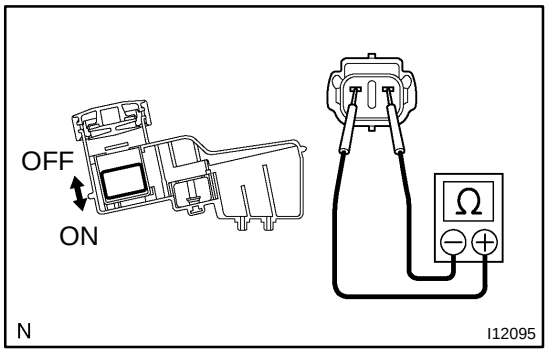

11. INSPECT BRAKE FLUID LEVEL WARNING SWITCH CONTINUITY

(a) Remove the reservoir tank cap and strainer.
(b) Disconnect the connector.
(c) Check that no continuity exists between the terminals with the switch OFF (float up).
(d) Use syphon, etc. to take fluid out of the reservoir tank.
(e) Check that continuity exists between the terminals with the switch ON (float down)
(f) Pour the fluid back in the reservoir tank.

If operation is not as specified, replace the switch.

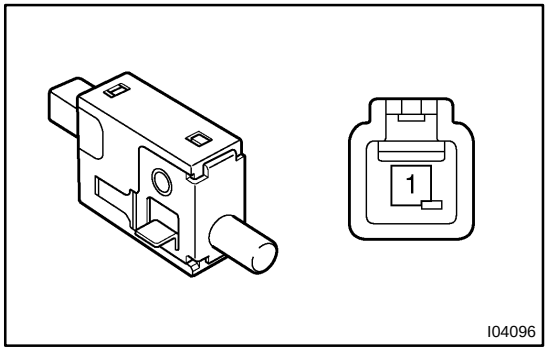

12. INSPECT PARKING BRAKE SWITCH CONTINUITY

(a) Check that continuity exists between the terminal and switch body with the switch ON (switch pin released).
(b) Check that no continuity exists between the terminal and switch body with the switch OFF (switch pin pushed in).

If operation is not as specified, replace the switch or inspect ground point.

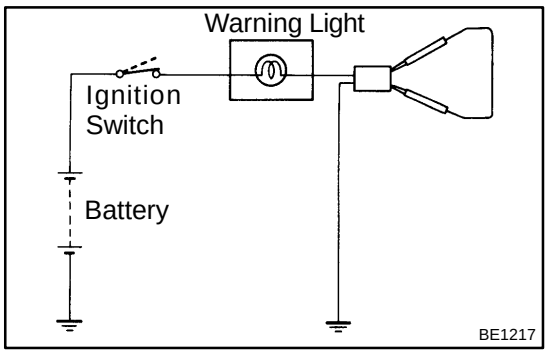

13. INSPECT WINDOW WASHER LEVEL WARNING LIGHT

(a) Disconnect the connector from the warning switch and ground terminal on the wire harness side connector.

(b) Turn the ignition switch ON and check that the warning light lights up.

If the warning light does not light up, inspect the bulb or wire harness.

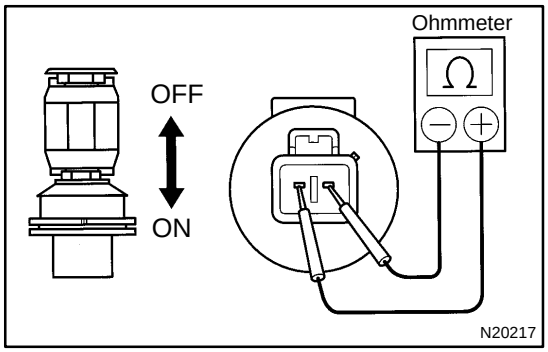

14. INSPECT WINDOW WASHER LEVEL WARNING SWITCH CONTINUITY

(a) Check that there is no continuity between the terminals with the switch OFF (float up).

(b) Check that there is continuity between the terminals with the switch ON (float down)

If operation is not as specified, replace the switch or inspect ground point.

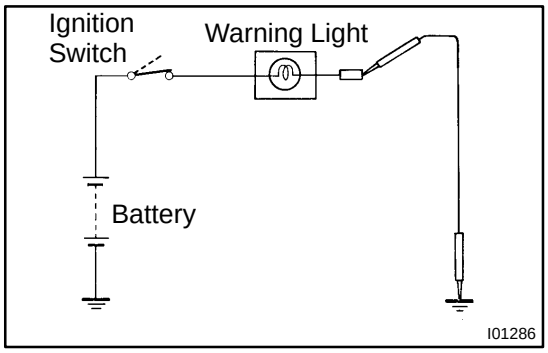

15. INSPECT OPEN DOOR WARNING LIGHT

Disconnect the connector from the door courtesy switch and ground terminal 1 on the wire harness side, and check that the warning light lights up.

If the warning light does not light up, inspect the bulb or wire harness.

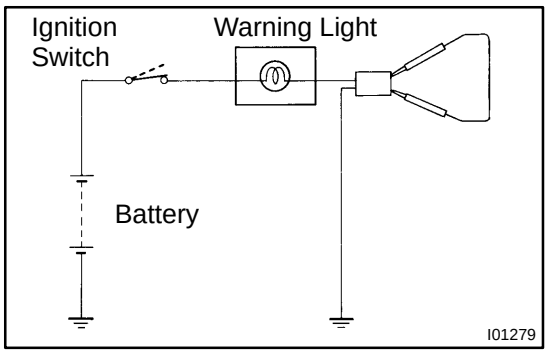

16. INSPECT SEAT BELT WARNING LIGHT

(a) Disconnect the connector from the buckle switch and ground terminal on the wire harness side connector.

(b) Turn the ignition switch ON and check that the warning light lights up.

If the warning light does not light up, inspect the bulb or wire harness.

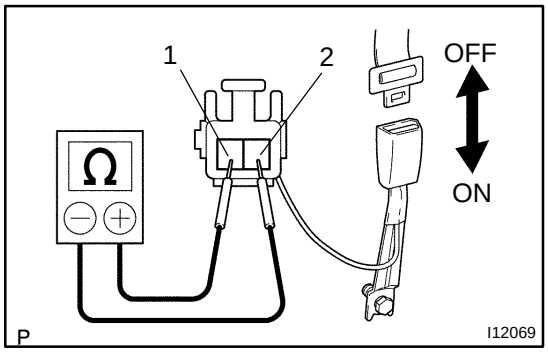

17. INSPECT BUCKLE SWITCH CONTINUITY

(a) Check that continuity exists between the terminals on the switch side connector with the switch ON (belt fastened).

(b) Check that no continuity exists between the terminals on the switch side connector with the switch OFF (belt unfastened).

If operation is not as specified, replace the seat belt inner belt.

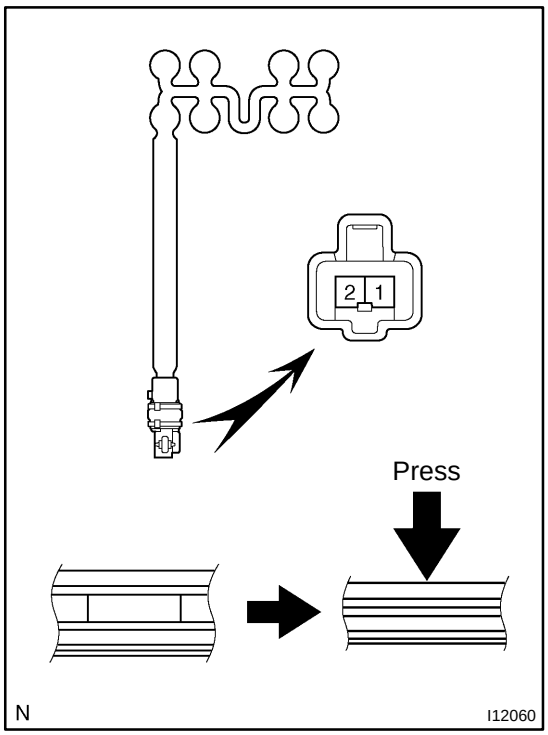

18. Passenger's seat only:
INSPECT SEAT BELT WARNING OCCUPANT DETECTION SENSOR CONTINUITY

Check that continuity exists between the terminals 1 and 2 when pressing the sensing part.

If operation is not as specified, replace the sensor.

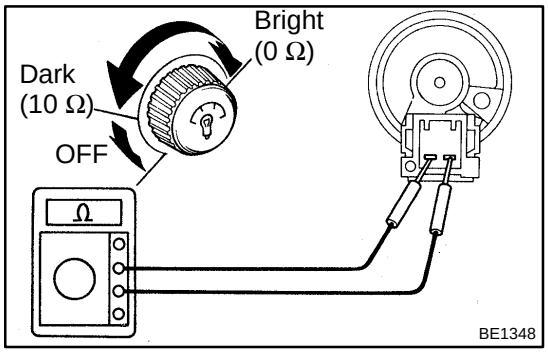

19. INSPECT LIGHT CONTROL RHEOSTAT

(a) Turn the rheostat knob OFF, and check that there is no continuity between terminals. (Rheostat knob turned to fully counterclockwise.)

(b) Gradually, turn the rheostat knob from the dark side to bright side, and check that the resistance decreases from 10 to 0 Ω. (Rheostat knob turned to clockwise.)

If operation is not as specified, replace the rheostat.

COMBINATION METER

LOCATION

BE18O-03

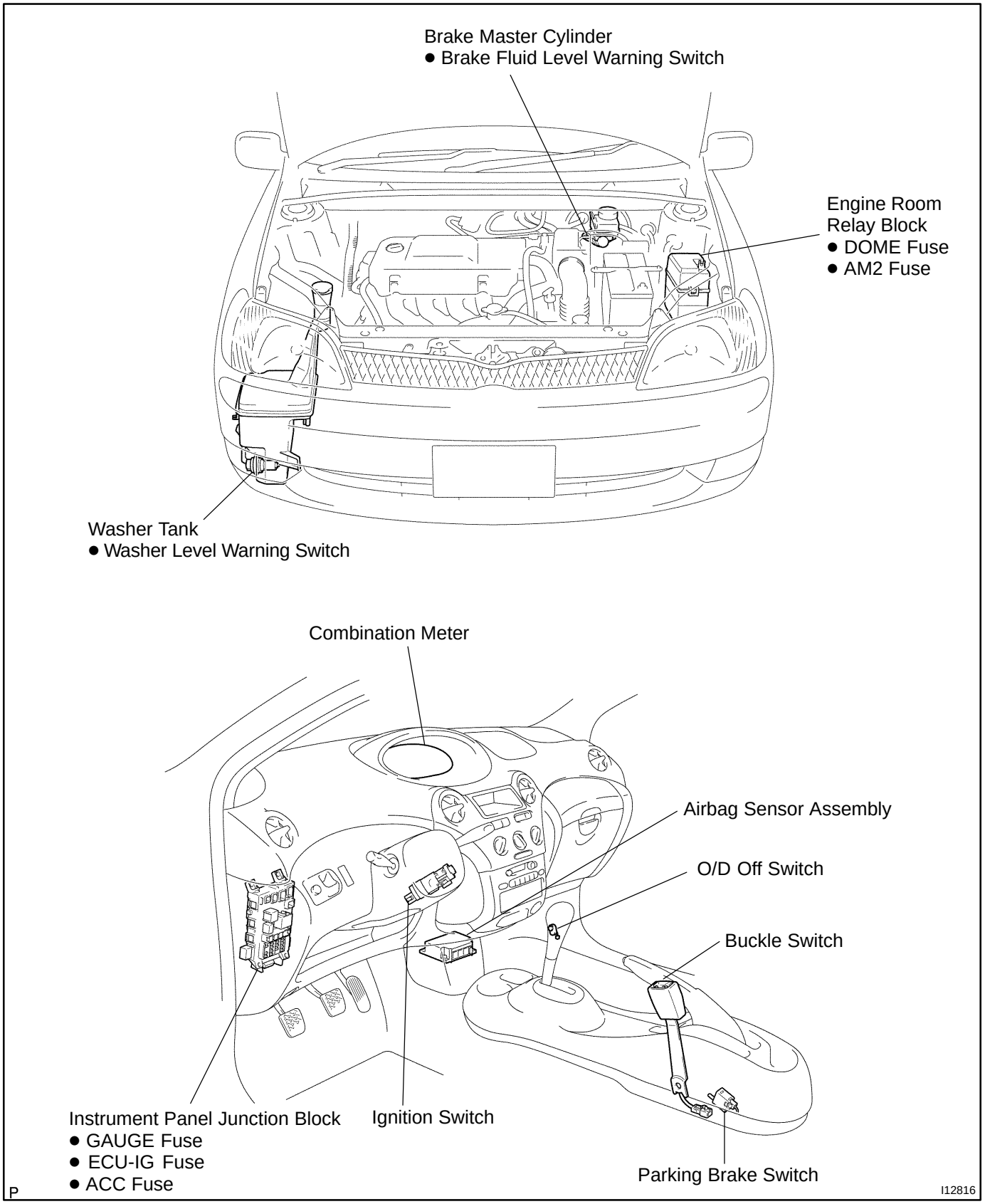

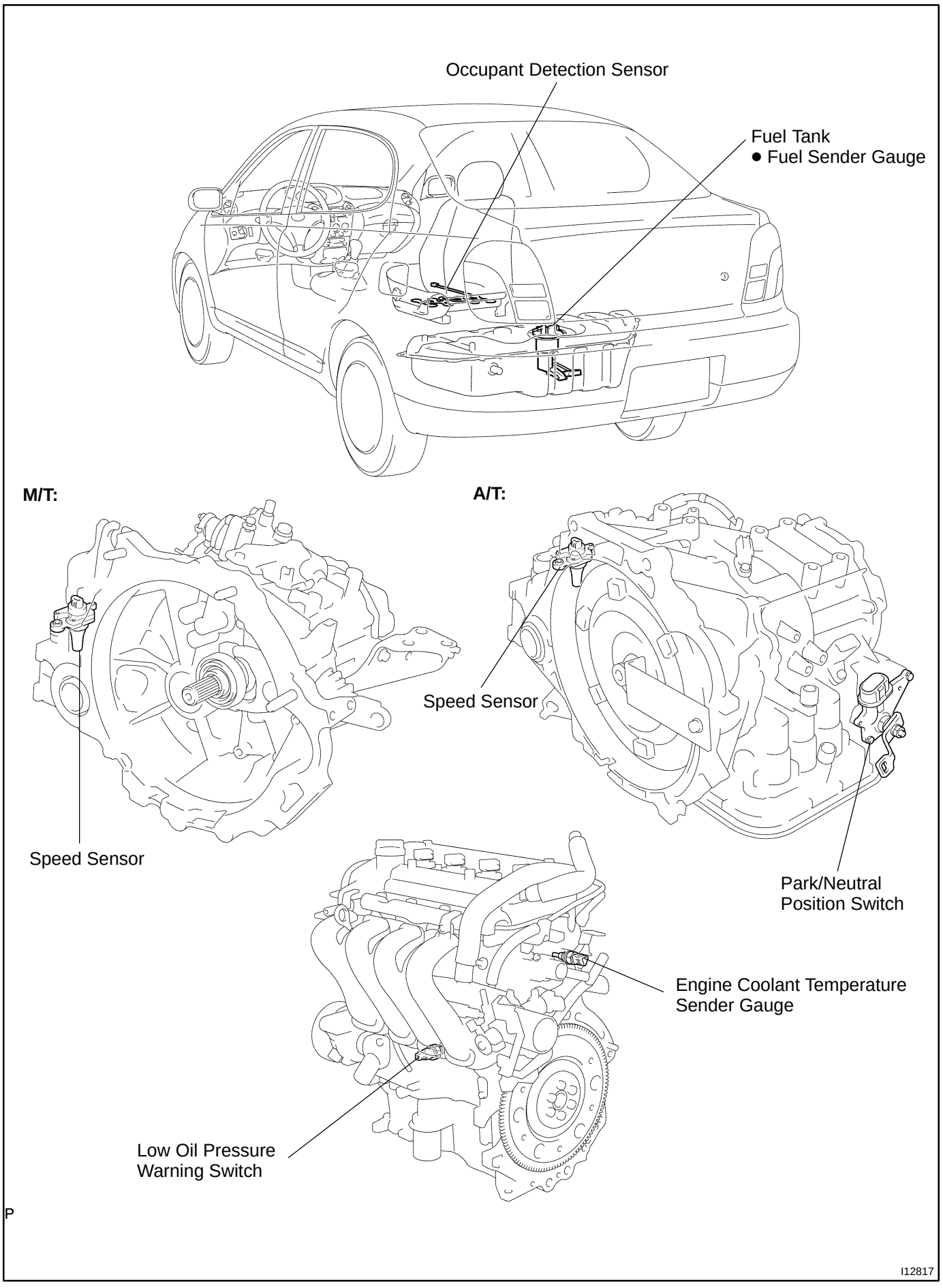
Occupant Detection Sensor
Fuel Tank
● Fuel Sender Gauge
M/T:
A/T:
Speed Sensor
Speed Sensor
Park/Neutral
Position Switch
Engine Coolant Temperature
Sender Gauge
Low Oil Pressure
Warning Switch
P
I12817

BE1FB-01

INSPECTION

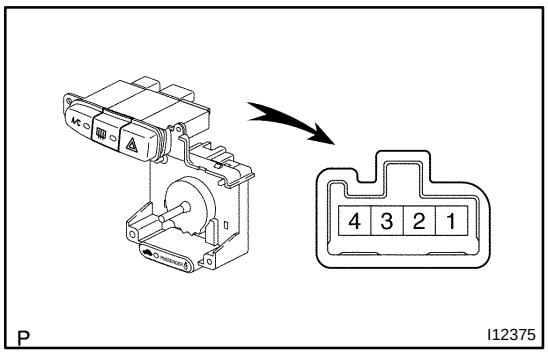

1. w/o Defogger timer:
INSPECT DEFOGGER SWITCH CONTINUITY

Switch position	Tester connection	Specified condition
Switch OFF	-	No continuity
Switch ON	3 - 4	Continuity
Illumination circuit	4 - 5	Continuity

If continuity is not as specified, replace the switch.

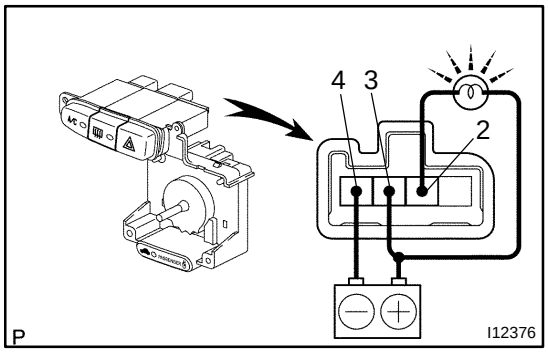

2. w/ Defogger timer:
INSPECT DEFOGGER TIMER OPERATION

(a) Connect the positive (+) lead from the battery to terminal 3 and negative (-) lead to terminal 4.
(b) Connect the positive (+) lead from the battery to terminal 2 through a 3.4 W test bulb.
(c) Turn the defogger switch ON and check that the indicator light and test bulb light up for 12 for 18 minutes, then the indicator light and test bulb lights go out.

If operation is not as specified, replace the switch.

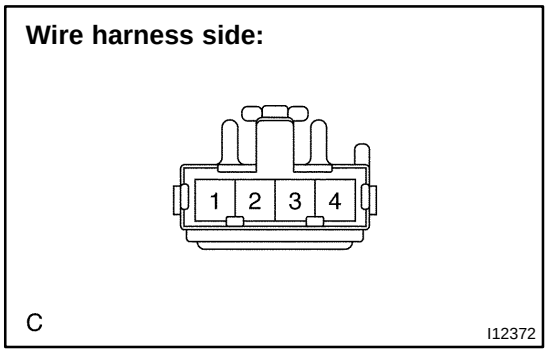

3. w/ Defogger timer:
INSPECT DEFOGGER SWITCH CIRCUIT

Disconnect the connector from the switch and inspect the connector on wire harness side, as shown in the chart.

Tester connection	Condition	Specified condition
2 - Ground	Constant	Continuity
4 - Ground	Defogger switch OFF	No continuity
4 - Ground	Defogger switch ON	Continuity
3 - Ground	Ignition switch LOCK or ACC	No voltage
3 - Ground	Ignition switch ON	Battery positive voltage

If the circuit is not as specified, replace the switch.

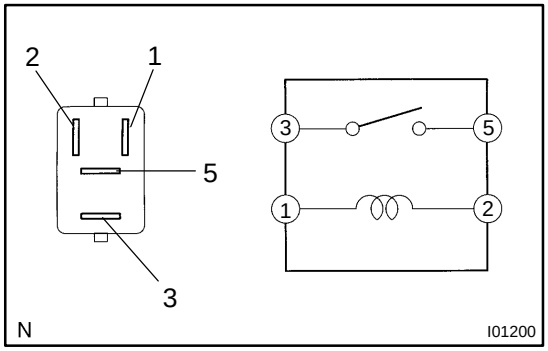

4. INSPECT DEFOGGER RELAY CONTINUITY

Condition	Tester connection	Specified condition
Constant	1 - 2	Continuity
Apply B + between terminal 1 and 2.	3 - 5	Continuity

If Continuity is not as specified, replace the relay.

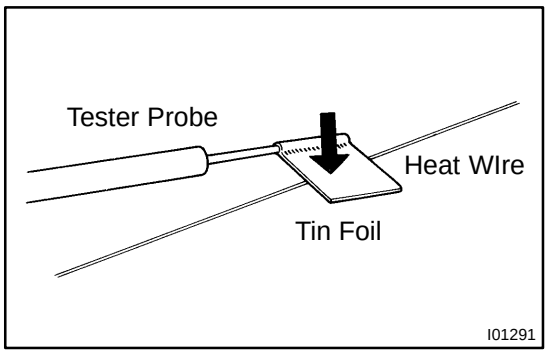

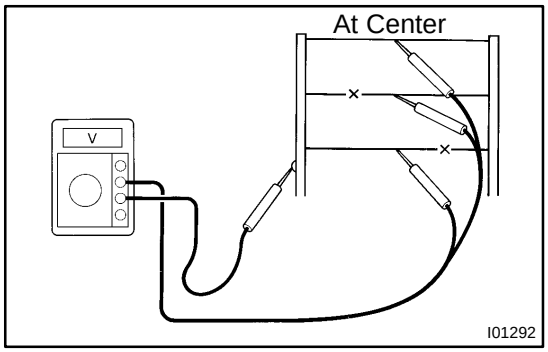

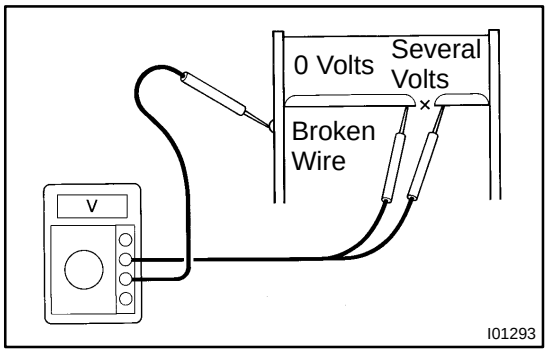

5. INSPECT DEFOGGER WIRE

NOTICE:

- **When cleaning the glass, use a soft, dry cloth, and wipe the glass in the direction of the wire. Take care not to damage the wires.**
- **Do not use detergents or glass cleaners with abrasive ingredients.**
- **When measuring voltage, wind a piece of tin foil around the top of the negative probe and press the foil against the wire with your finger, as shown.**

(a) Turn the ignition switch ON.

(b) Turn the defogger switch ON.

(c) Inspect the voltage at the center of each heat wire, as shown.

Voltage	Criteria
Approx. 5V	Okay (No break in wire)
Approx. 10V or 0V	Broken wire

HINT:

If there is approximately 10 V, the wire is broken between the center of the wire and the positive (+) end. If there is no voltage, the wire is broken between the center of the wire and ground.

(d) Place the voltmeter positive (+) lead against the defogger positive (+) terminal.

(e) Place the voltmeter negative (-) lead with the foil strip against the heat wire at the positive (+) terminal end and slide it toward the negative (-) terminal end.

(f) The point where the voltmeter deflects from zero to several V is the place where the heat wire is broken.

HINT:

If the heat wire is not broken, the voltmeter indicates 0 V at the positive (+) end of the heat wire but gradually increases to about 12 V as the meter probe is moved to the other end.

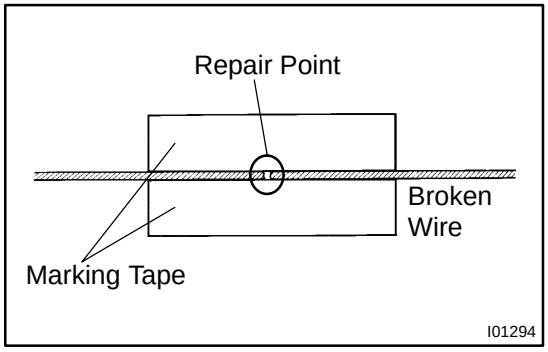

6. IF NECESSARY, REPAIR DEFOGGER WIRE

(a) Clean the broken wire tips with grease, wax and silicone remover.

(b) Place the masking tape along both sides of the wire for repair.

(c) Thoroughly mix the repair agent (Dupont paste No. 4817).

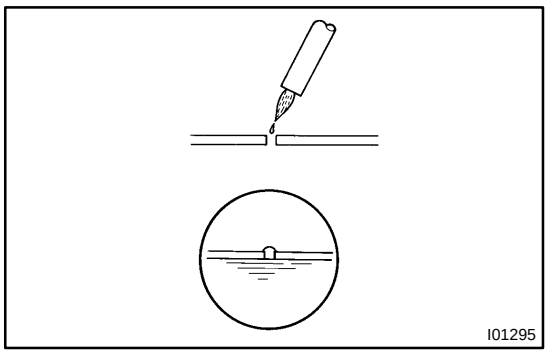

(d) Using a fine tip brush, apply a small amount of the agent to the wire.
(e) After a few minutes, remove the masking tape.
(f) Do not repair the defogger wire for at least 24 hours.

DEFOGGER SYSTEM

BE18R-03

LOCATION

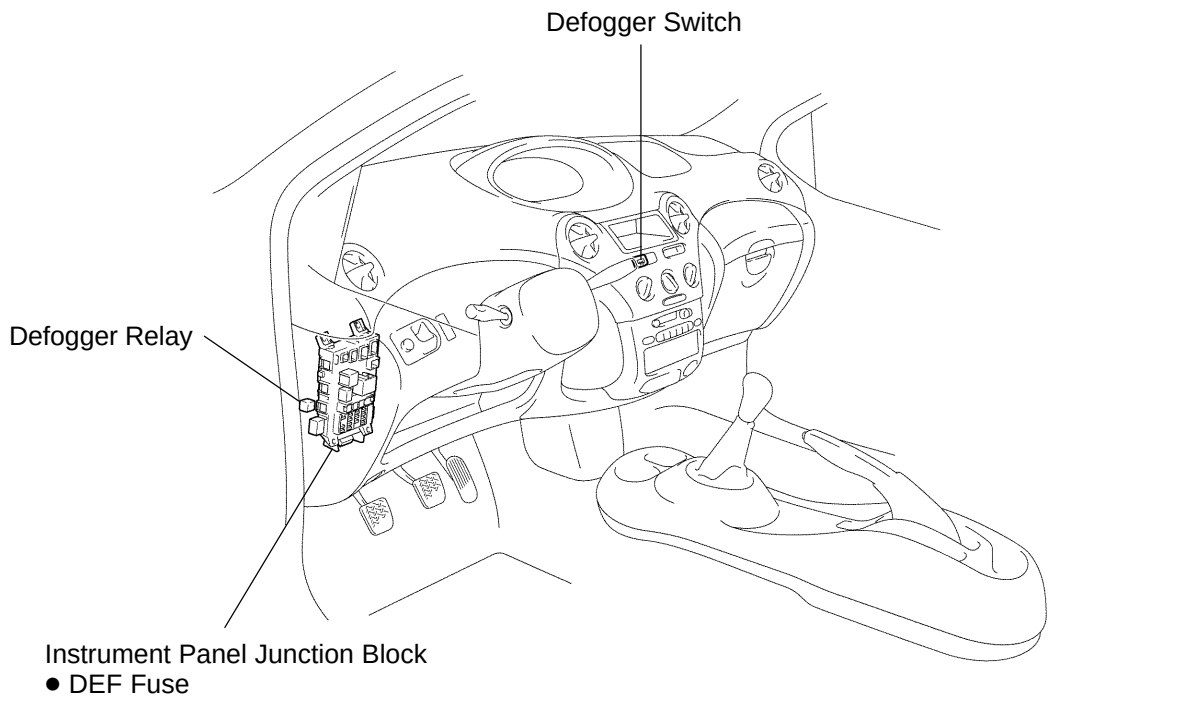

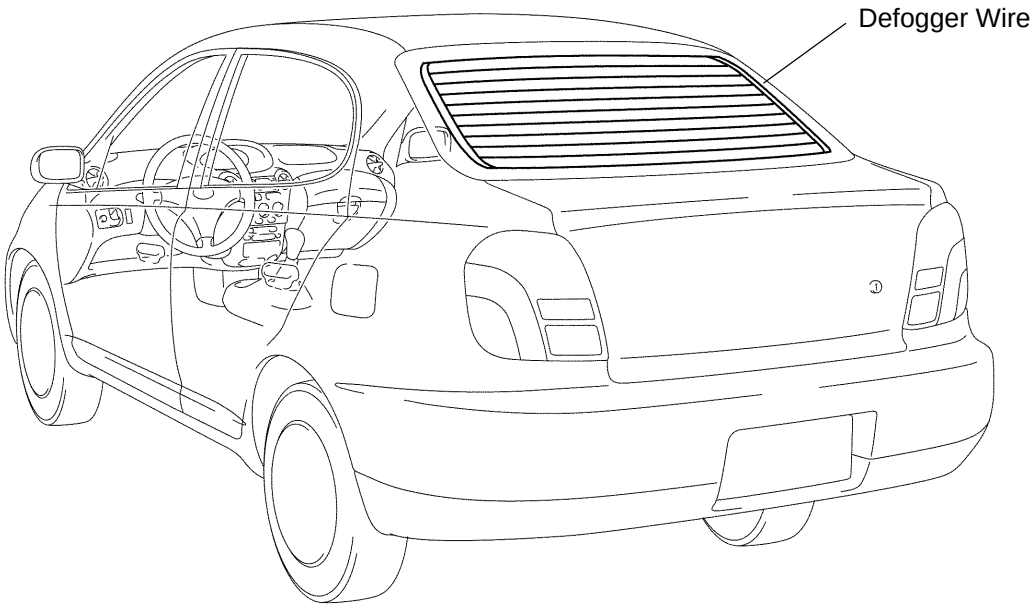

P

I12818

BE18B-04

ADJUSTMENT

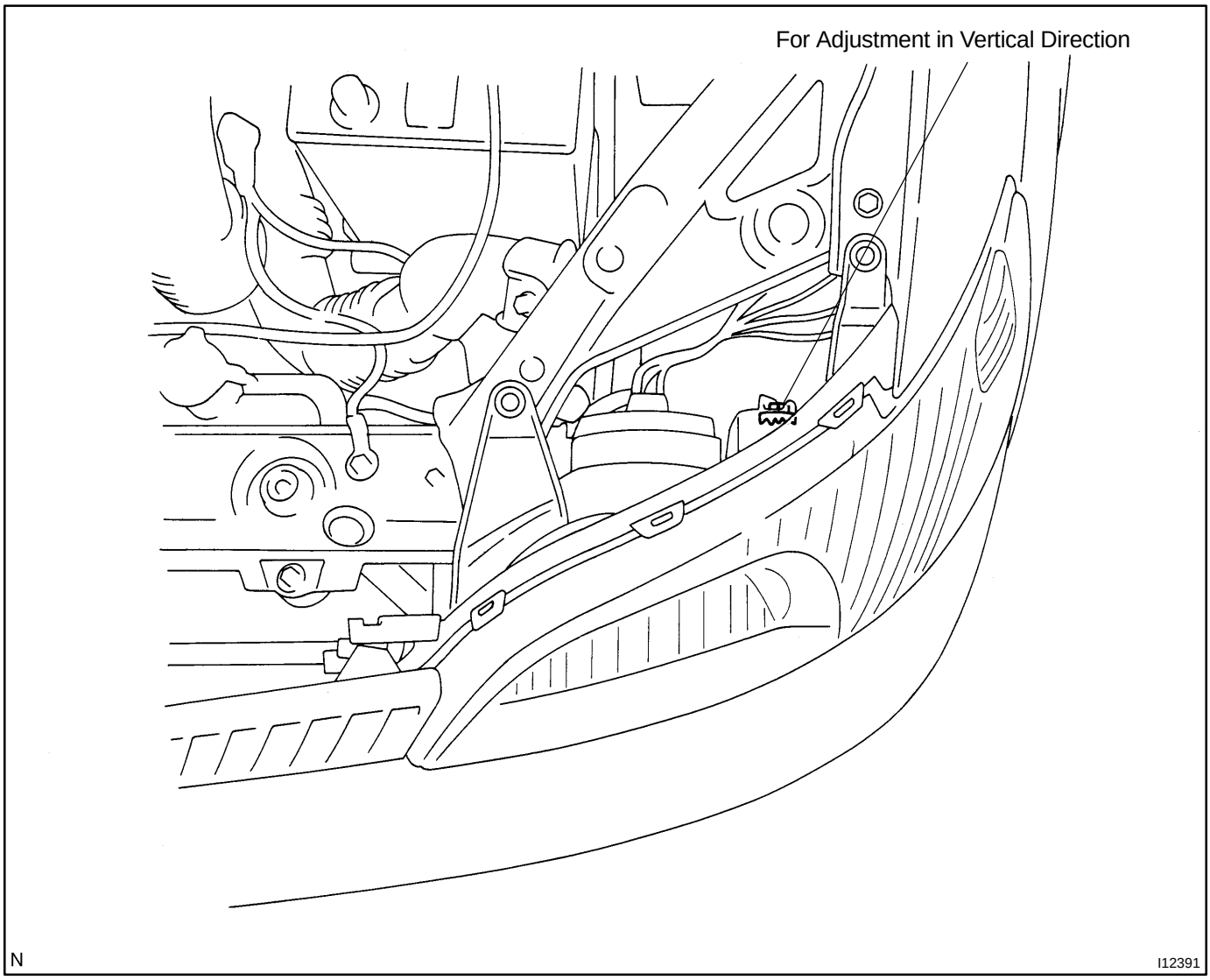

ADJUSTING HEADLIGHT AIM

(a) Place the vehicle in the following conditions.
- The area around the headlight is not deformed.
- The vehicle is parked on a level surface.
- Tire inflation pressure is the specified value.
- A driver is in the driver's seat and the vehicle is in a state ready for driving (with a tank full).
- The vehicle has been bounced several times.

(b) Check the headlight aiming.
(1) Prepare a thick white paper.
(2) Stand the paper perpendicular to the ground at the position 9.84 ft away from the headlights.
(3) Ensure that the center line of the vehicle and the paper face forms a 90-degree angle as shown in the illustration.
(4) Draw a horizontal line (H line) on the paper, showing where the headlights should strike.
(5) Draw a vertical line (V line) to where the center line of the vehicle is to be.
(6) Draw 2 vertical lines to where the both headlights should strike (V RH and V LH lines).
(7) Draw a horizontal line (by connecting the both low beam center marks) to where the headlights should strike (H RH and H LH lines).

HINT:
The H RH and H LH line is 0.4° below the horizontal line (H line) of the light axis.

(8) Start the engine.
(9) Turn the headlights ON.
(10) Check that the headlights properly strike the position shown in the illustration.
(11) If not, adjust the lights in the vertical or horizontal direction.

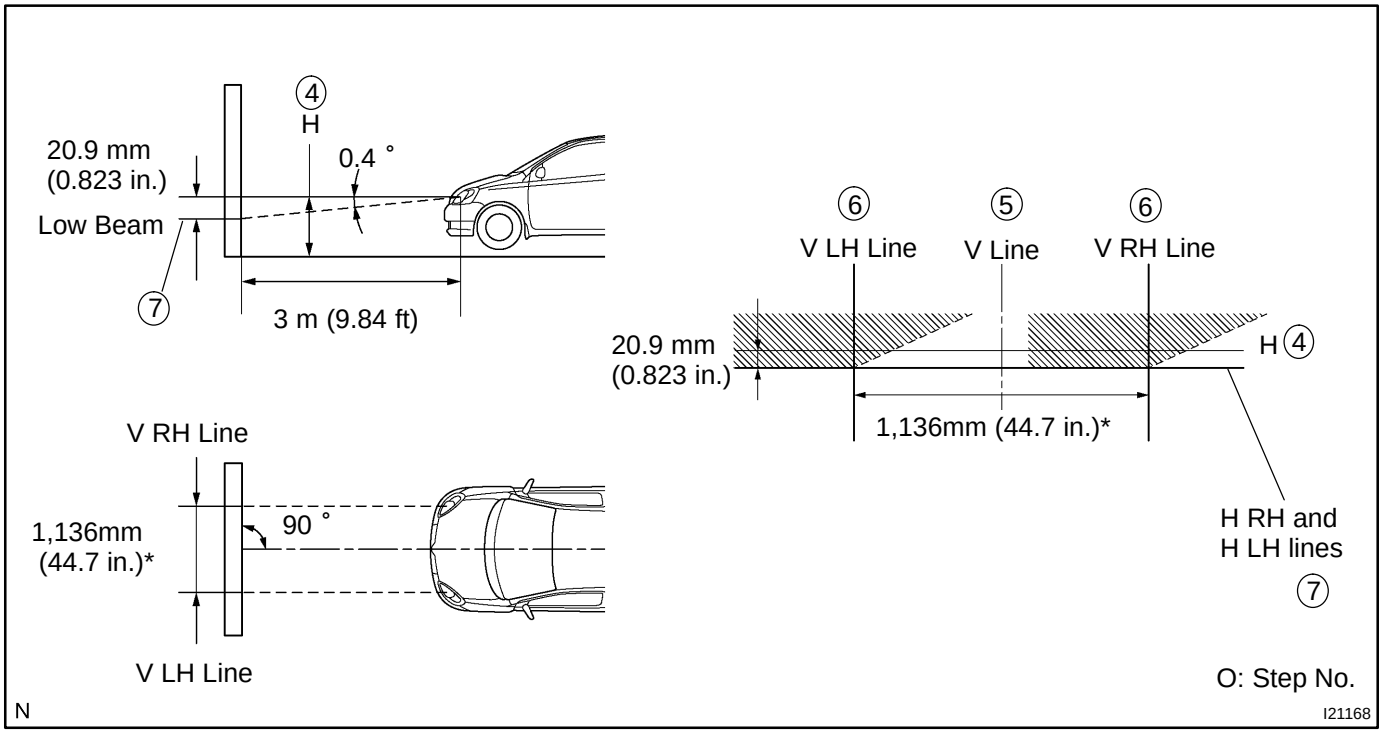

HINT:
- As shown in the illustration, adjust each aim of the RH and LH lights.
- Since the horizontal direction is impossible to adjust, the value * of the "Low Beam" aim is reference value.

(c) When adjusting it in the vertical direction:
Using adjusting bolt A, adjust the headlight aim to within the specified range.

BE187-03

COMPONENTS

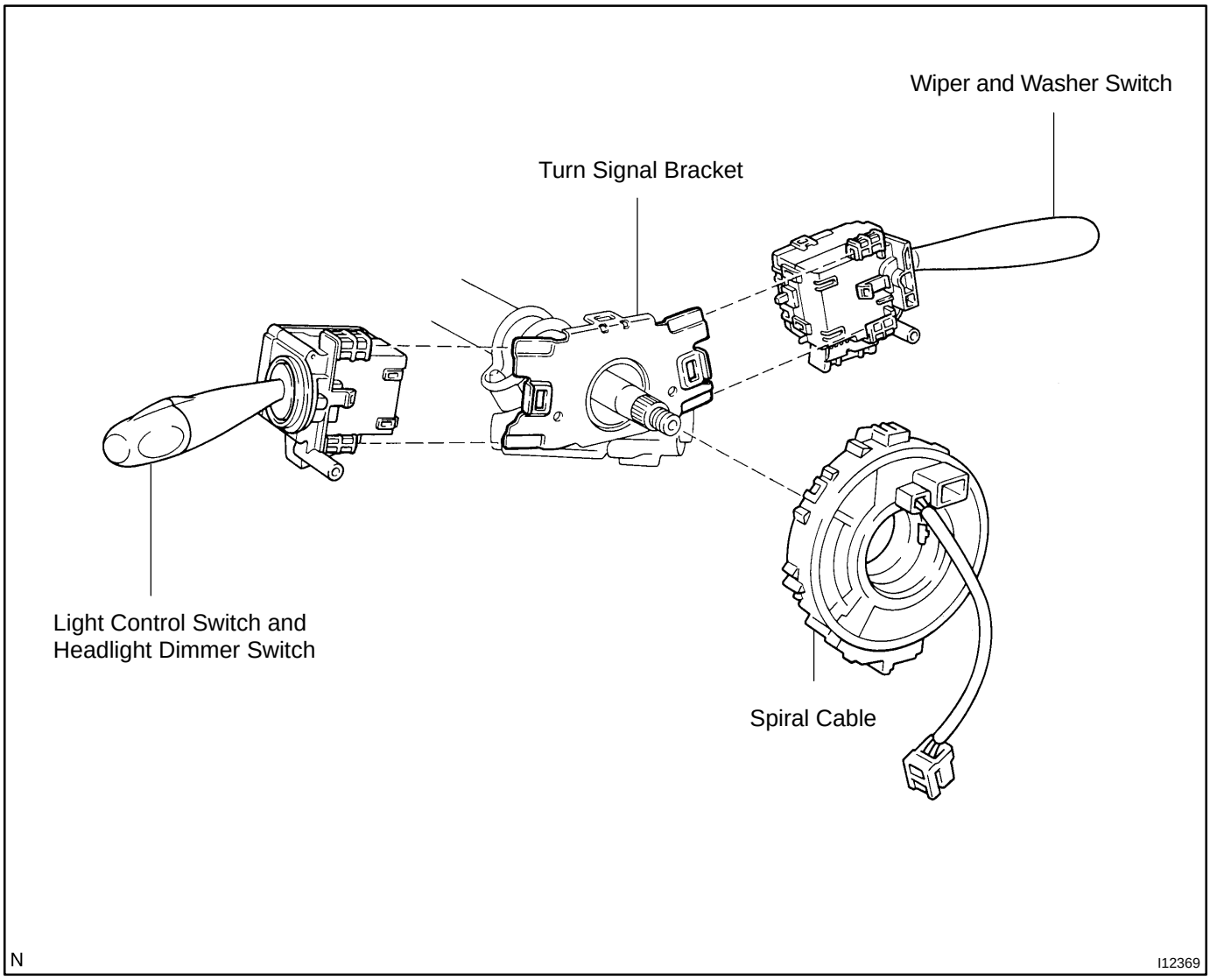

BE189-03

DISASSEMBLY

1. REMOVE STEERING WHEEL (See page SR-13)

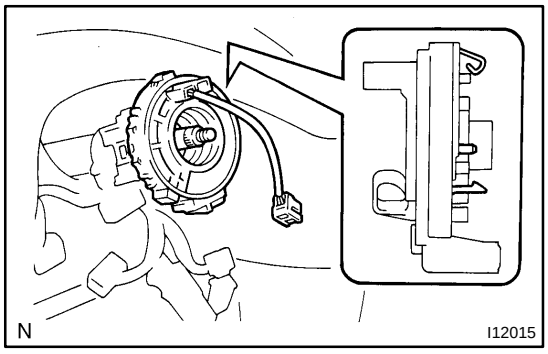

2. REMOVE SPIRAL CABLE

Remove the spiral cable from the turn signal bracket.

BE1F5-01

INSPECTION

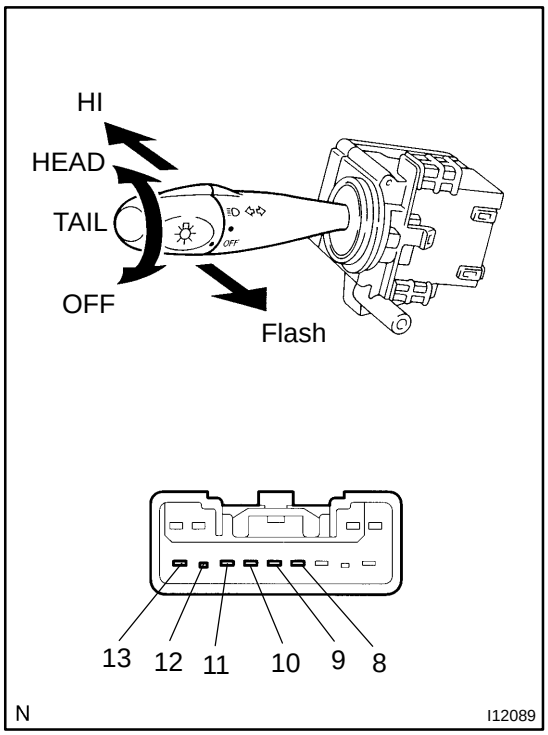

1. INSPECT LIGHT CONTROL SWITCH CONTINUITY

Switch position	Tester connection	Specified condition
OFF	-	No continuity
TAIL	10 - 13	Continuity
HEAD	10 - 13, 11 - 12	Continuity

If continuity is not as specified, replace the switch.

2. INSPECT HEADLIGHT DIMMER SWITCH CONTINUITY

Switch position	Tester connection	Specified condition
Low beam	-	No continuity
HEAD and Low beam	8 - 11 - 12	Continuity
High beam	-	No continuity
HEAD and High beam	9 - 11 - 12	Continuity
Flash	9 - 11	Continuity
HEAD and Flash	8 - 9 - 11 - 12	Continuity

If continuity is not as specified, replace the switch.

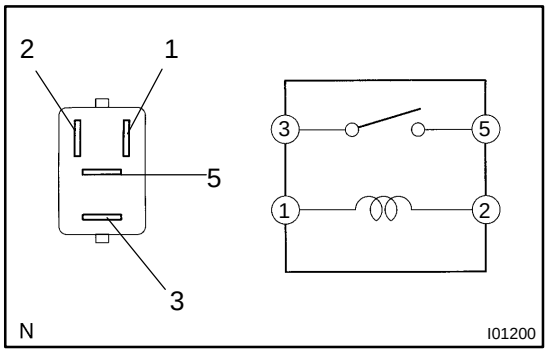

3. Puerto Rico models: w/ Wireless door lock control system: INSPECT HEADLIGHT CONTROL RELAY CONTINUITY

Condition	Tester connection	Specified condition
Constant	1 - 2	Continuity
Apply B+ between terminal 1 and 2.	3 - 5	Continuity

If continuity is not as specified, replace the relay.

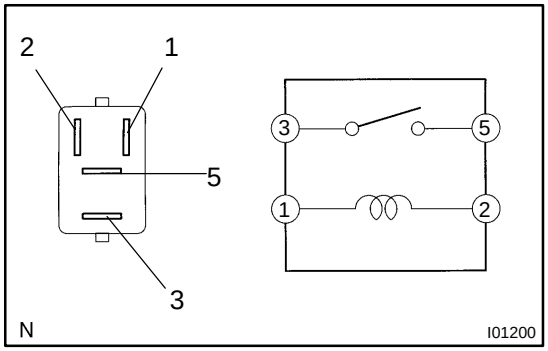

4. Puerto Rico models: w/ Wireless door lock control system: INSPECT TAILLIGHT CONTROL RELAY CONTINUITY

Condition	Tester connection	Specified condition
Constant	1 - 2	Continuity
Apply B+ between terminal 1 and 2.	3 - 5	Continuity

If continuity is not as specified, replace the relay.

Wire harness side:

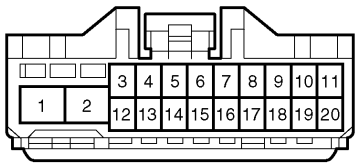

e-14-1-A
N
I12364

5. w/ Daytime running light system:
INSPECT DAYTIME RUNNING LIGHT MAIN RELAY CIRCUIT

Disconnect the connector from the relay and inspect the connector on the wire harness side.

Tester connection	Condition	Specified condition
1 - Ground *1	Light control switch OFF or TAIL	No continuity
1 - Ground *1	Light control switch HEAD	Continuity
1 - Ground *2	Constant	Continuity
2 - Ground	Constant	Continuity
7 - Ground	Headlight dimmer switch LOW beam	No continuity
7 - Ground	Headlight dimmer switch HIGH beam or FLASH	Continuity
10 - Ground	Brake fluid level warning switch OFF	No continuity
10 - Ground	Brake fluid level warning switch ON	Continuity
11 - Ground	Parking brake switch OFF (Parking brake pedal released)	No continuity
11 - Ground	Parking brake switch ON (Parking brake pedal depressed)	Continuity
3 - Ground	Constant	Battery positive voltage
9 - Ground	Engine Stop	No voltage
9 - Ground	Engine Running	Battery positive voltage
12 - Ground	Ignition switch LOCK or ACC	No voltage
12 - Ground	Ignition switch ON or START	Battery positive voltage

*1: Except Puerto Rico models
*2: Puerto Rico models

If circuit is specified, try replacing the relay with a new one.
If circuit is not as specified, inspect the circuits connected to other parts.

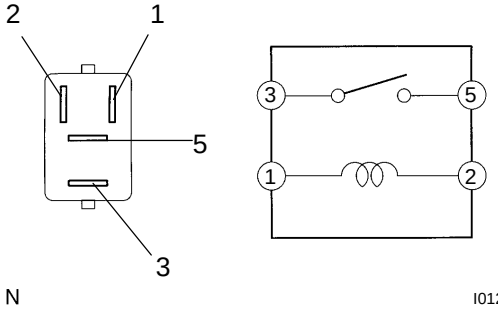

N
I01200

6. w/ Daytime running light system:
INSPECT DAYTIME RUNNING LIGHT NO. 5 RELAY CONTINUITY

Condition	Tester connection	Specified condition
Constant	1 - 2	Continuity
Apply B+ between terminal 1 and 2.	3 - 5	Continuity

If continuity is not as specified, replace the relay.

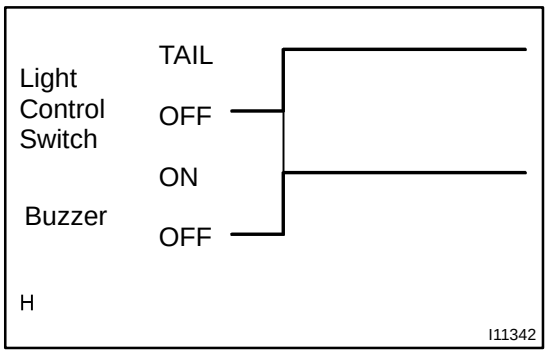

7. INSPECT LIGHT AUTO TURN OFF BUZZER

Check that the buzzer sound when driver's door is opened and turn light control switch position TAIL.

If operation is not as specified, replace the combination meter. (See page BE-42)

BE18D-01

INSTALLATION

Installation is in the reverse order of removal (See page BE-19).

HEADLIGHT AND TAILLIGHT SYSTEM

BE186-02

LOCATION

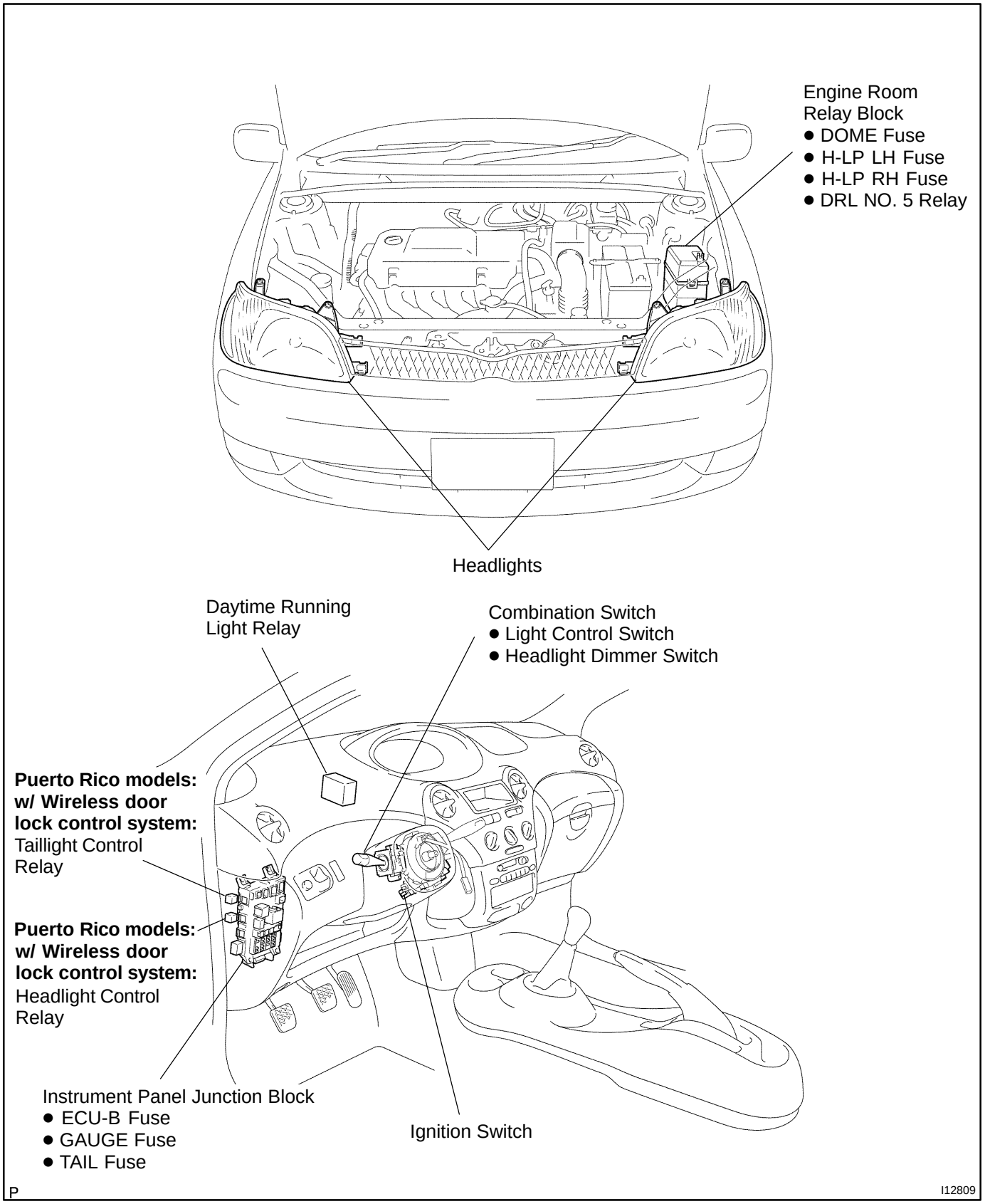

2 door models:

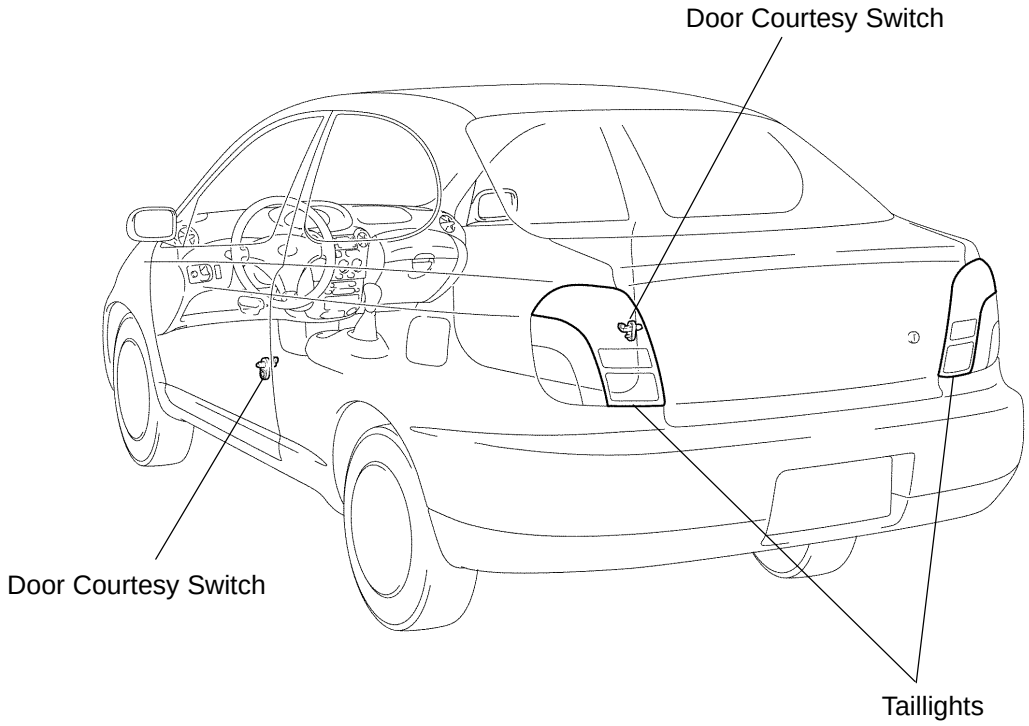

4 door models:

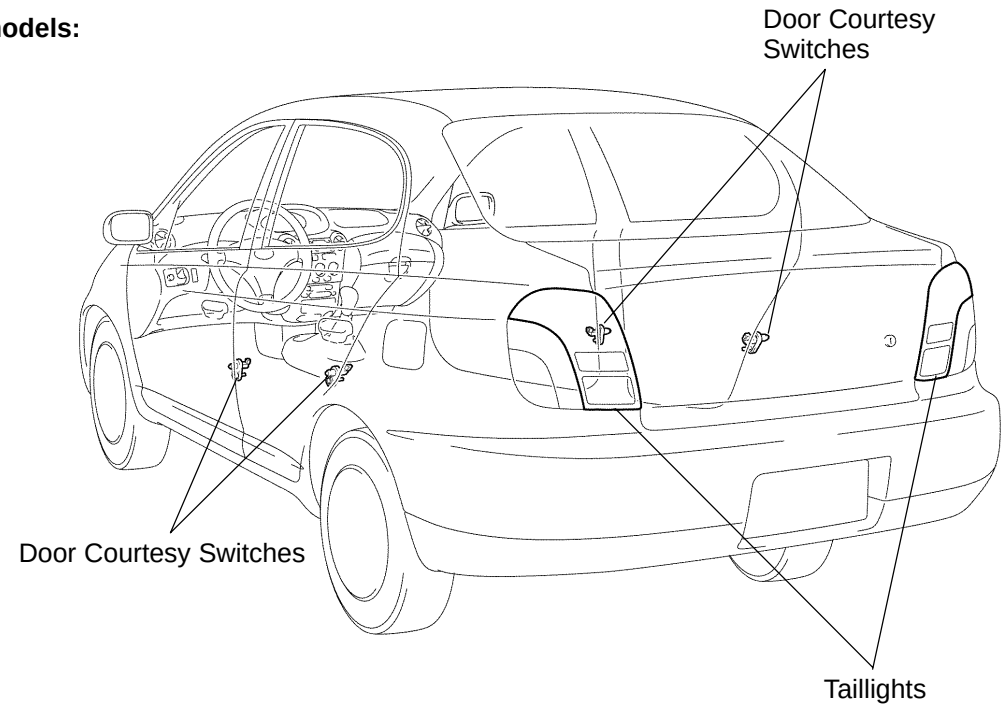

P

I12810

BE18C-01

REASSEMBLY

Installation is in the reverse order of disassembly (See page BE-20).

BE188-03

REMOVAL

Installation is in the reverse order of removal.

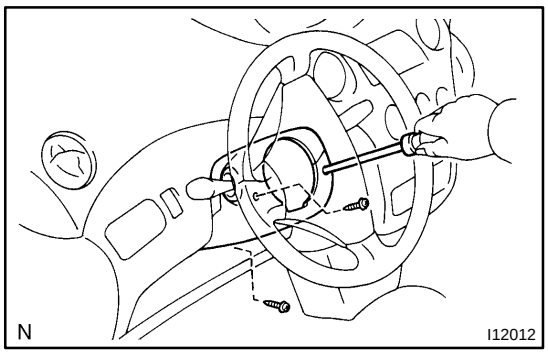

1. REMOVE COLUMN COVER

(a) Remove the 3 screws.

(b) Remove the column cover.

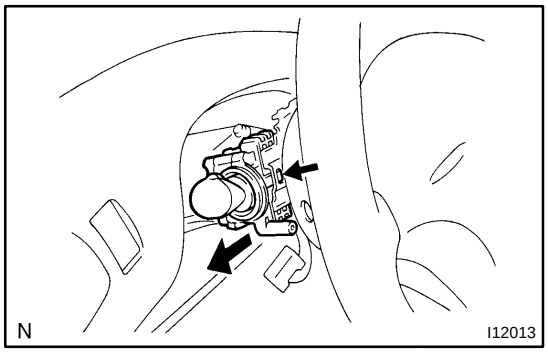

2. REMOVE LIGHT CONTROL SWITCH

(a) Disconnect the light control switch connector.

(b) Remove the switch from the turn signal bracket.

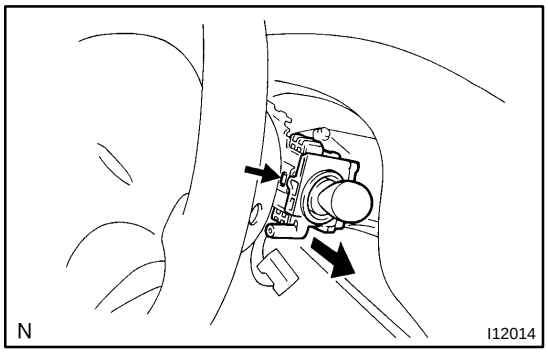

3. REMOVE WIPER AND WASHER SWITCH

(a) Disconnect the wiper and washer switch connector.

(b) Remove the switch from the turn signal bracket.

BE1F7-01

INSPECTION

1. INSPECT ROOM LIGHT CONTINUITY

(a) Disconnect the connector from the room light.

(b) Turn the room light switch ON, check that there is continuity between terminal 2 and body ground.

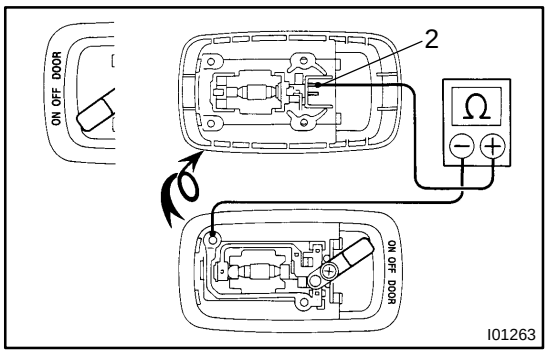

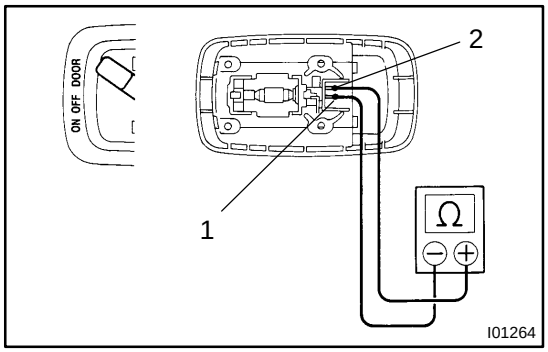

(c) Turn the room light switch DOOR, check that there is continuity between terminals 1 and 2.

If continuity is not as specified, replace the light assembly or bulb.

2. INSPECT DOOR COURTESY SWITCH CONTINUITY

(a) Check that continuity exists between terminals and the switch body with the switch ON (switch pin released: opened door).

(b) Check that no continuity exists between terminals and the switch body with the switch OFF (switch pin pushed in: closed doors).

If operation is not as specified, replace the switch.

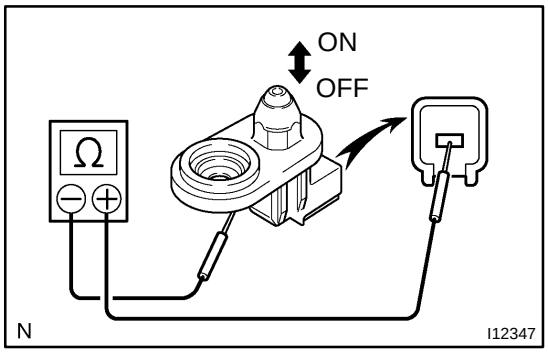

3. INSPECT LUGGAGE COMPARTMENT DOOR COURTESY SWITCH CONTINUITY

(a) Check that continuity exists between terminals and the switch body with the switch ON (switch pin released: opened door).

(b) Check that no continuity exists between terminals and the switch body with the switch OFF (switch pin pushed in: closed doors).

If operation is not as specified, replace the switch.

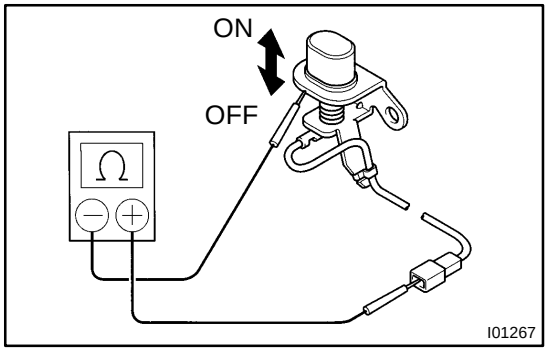

4. INSPECT LUGGAGE COMPARTMENT LIGHT CONTINUITY

Using the ohmmeter, check that there is continuity between terminals.

If continuity is not as specified, replace the light assembly or bulb.

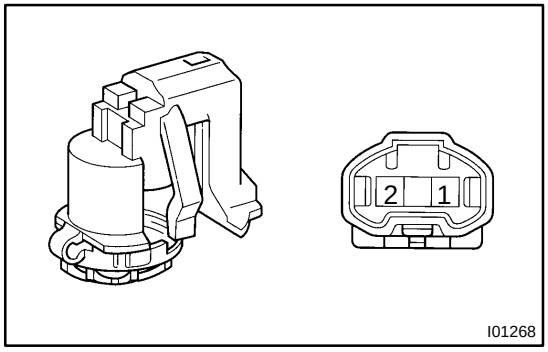

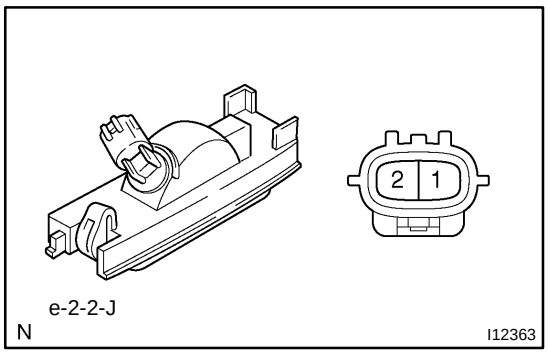

5. INSPECT LICENCE PLATE LIGHT CONTINUITY

Using the ohmmeter, check that continuity exists between terminals.

If continuity is not as specified, replace the light assembly or bulb.

INTERIOR LIGHT SYSTEM

LOCATION

BE18I-03

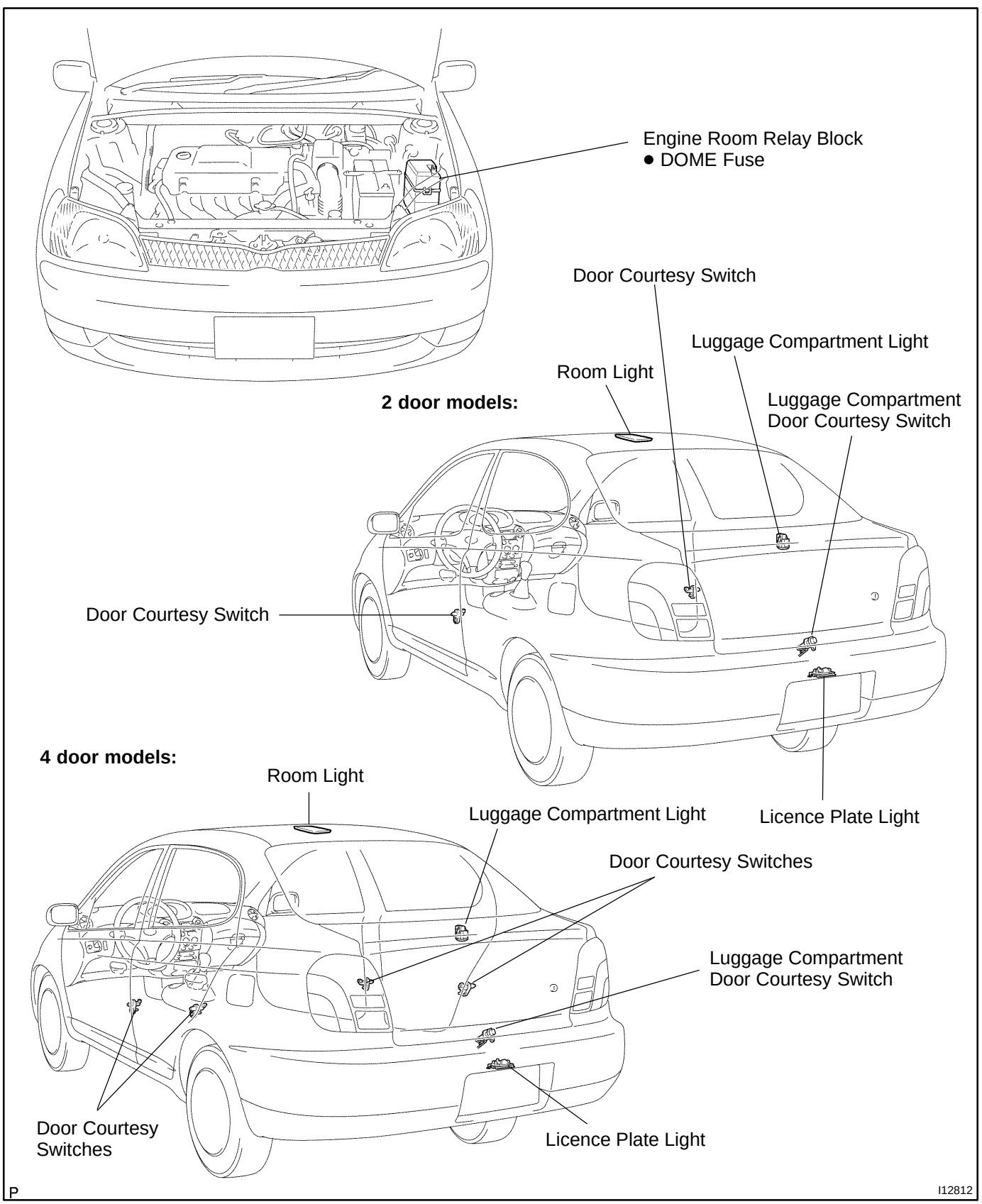

BE185-03

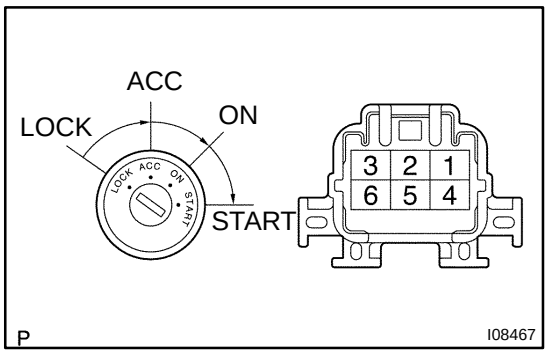

INSPECTION

1. INSPECT IGNITION SWITCH CONTINUITY

Switch position	Tester connection	Specified condition
LOCK	-	No continuity
ACC	1 - 3	Continuity
ON	1 - 2 - 3 5 - 6	Continuity
START	1 - 2 4 - 5 - 6	Continuity

If continuity is not as specified, replace the switch.

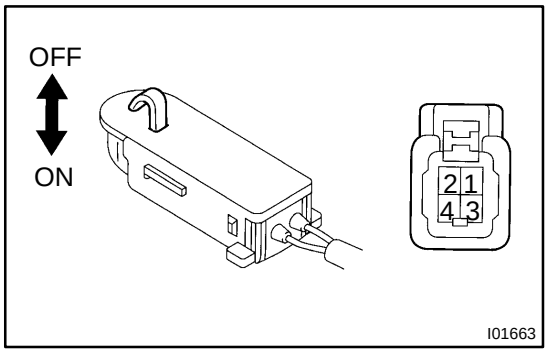

2. INSPECT KEY UNLOCK WARNING SWITCH CONTINUITY

Switch position	Tester connection	Specified condition
OFF (Key removed)	-	No continuity
ON (Key set)	1 - 2	Continuity

If continuity is not as specified, replace the switch.

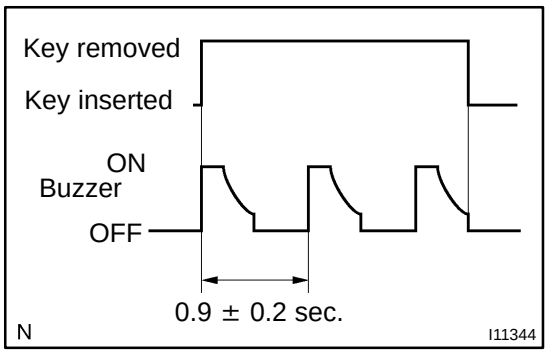

3. INSPECT KEY UNLOCK WARNING BUZZER

Check that the buzzer sound when driver's door is opened and key inserted.

If operation is not as specified, replace the combination meter. (See page BE-42)

IGNITION SWITCH AND KEY UNLOCK WARNING SWITCH

BE184-03

LOCATION

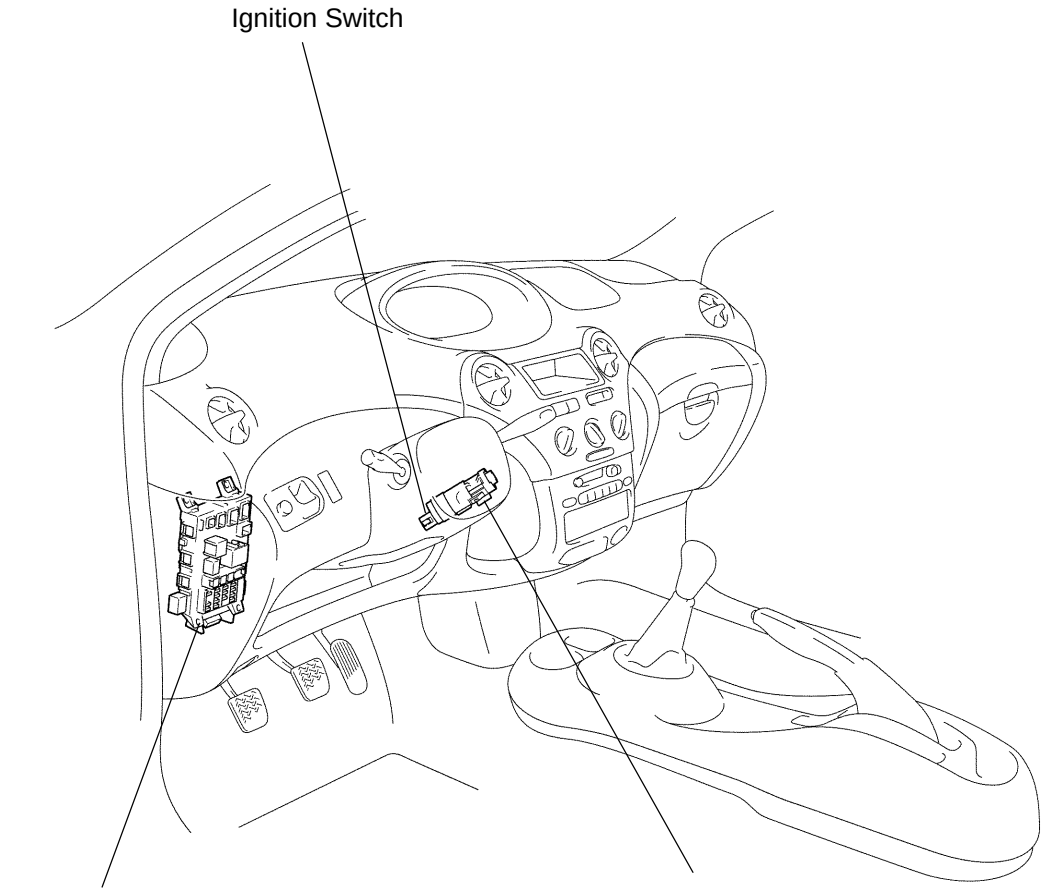

P

I13519

BE1FD-02

INSPECTION

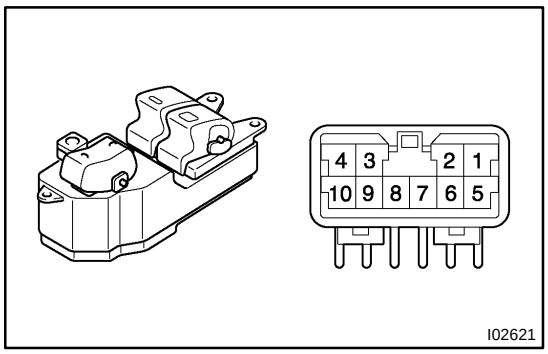

1. 2 door models driver's door (w/ Power window): INSPECT DOOR LOCK CONTROL SWITCH CONTINUITY

Switch position	Tester connection	Specified condition
LOCK	1 - 2	Continuity
OFF	-	No continuity
UNLOCK	1 - 5	Continuity

If continuity is not as specified, replace the switch.

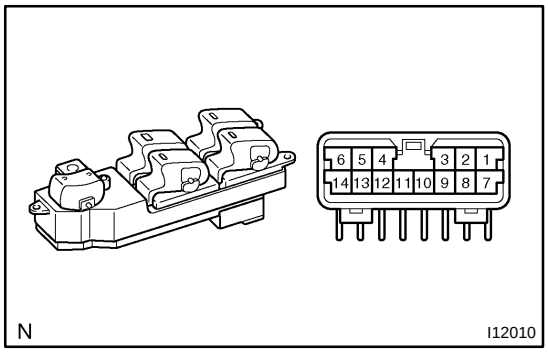

2. 4 door models driver's door (w/ Power window): INSPECT DOOR LOCK CONTROL SWITCH CONTINUITY

Switch position	Tester connection	Specified condition
LOCK	2 - 3, 2 - 4	Continuity
OFF	-	No continuity
UNLOCK	3 - 7, 4 - 7	Continuity

If continuity is not as specified, replace the switch.

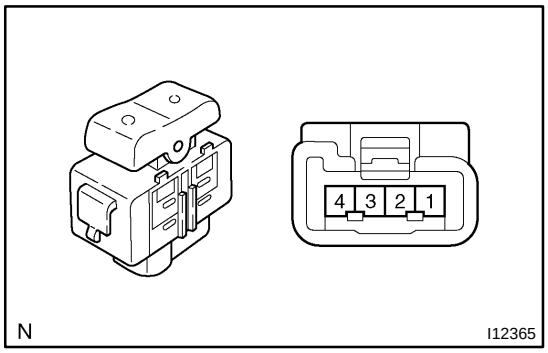

3. Passenger's door (w/ Power window): INSPECT DOOR LOCK CONTROL SWITCH CONTINUITY

Switch position	Tester connection	Specified condition
LOCK	3 - 4	Continuity
OFF	-	No continuity
UNLOCK	2 - 4	Continuity

If continuity is not as specified, replace the switch.

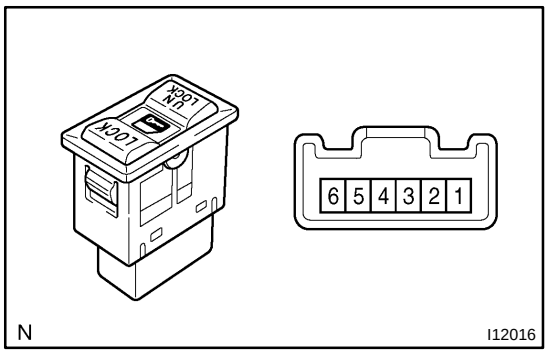

4. w/o Power window : INSPECT DOOR LOCK CONTROL SWITCH CONTINUITY

Switch position	Tester connection	Specified condition
LOCK	1 - 3	Continuity
OFF	-	No continuity
UNLOCK	1 - 6	Continuity
Illumination circuit	2 - 4	Continuity

If continuity is not as specified, replace the switch.

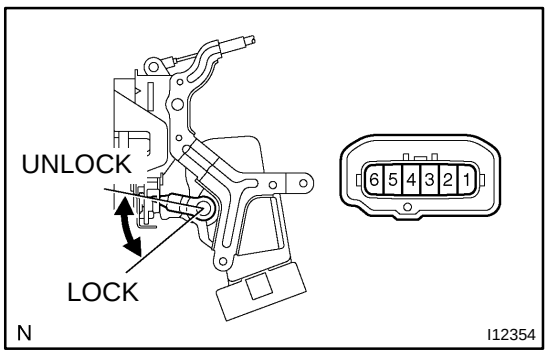

5. Front left side door: INSPECT DOOR KEY LOCK AND UNLOCK SWITCH CONTINUITY

Switch position	Tester connection	Specified condition
LOCK	3 - 5	Continuity
OFF	-	No continuity
UNLOCK	3 - 6	Continuity

If continuity is not as specified, replace the door lock assembly.

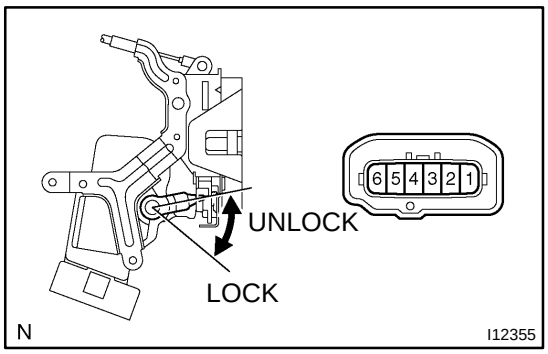

6. Front right side door:
INSPECT DOOR KEY LOCK AND UNLOCK SWITCH CONTINUITY

Switch position	Tester connection	Specified condition
LOCK	2 - 4	Continuity
OFF	-	No continuity
UNLOCK	1 - 4	Continuity

If continuity is not as specified, replace the door lock assembly.

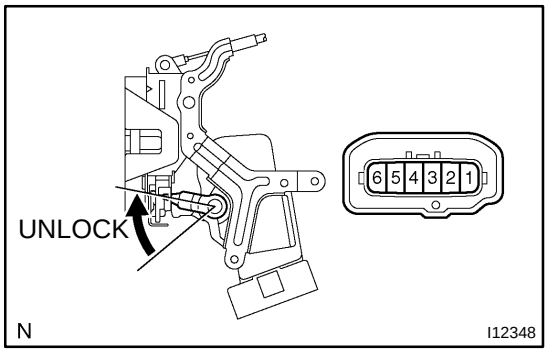

7. Driver's door:
INSPECT DOOR UNLOCK DETECTION SWITCH CONTINUITY

Switch position	Tester connection	Specified condition
OFF (Door Lock set to LOCK)	-	No continuity
ON (Door Lock set to UNLOCK)	3 - 4	Continuity

If continuity is not as specified, replace the door lock assembly.

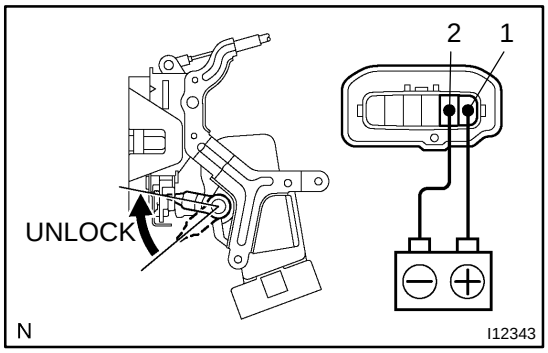

8. Front left side door:
INSPECT DOOR LOCK MOTOR OPERATION

(a) Connect the positive (+) lead from the battery to terminal 1 and the negative (-) lead to terminal 2, and check that the door lock link moves to UNLOCK position.

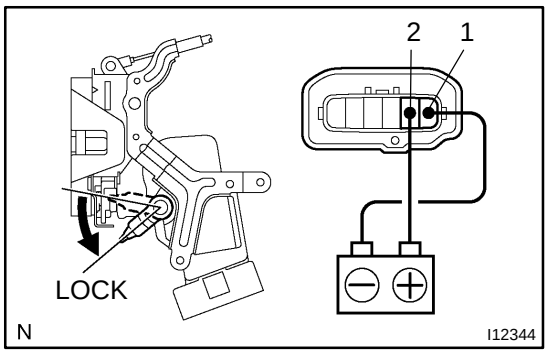

(b) Reverse the polarity and check that the door lock link moves to LOCK position.

If operation is not as specified, replace the door lock assembly.

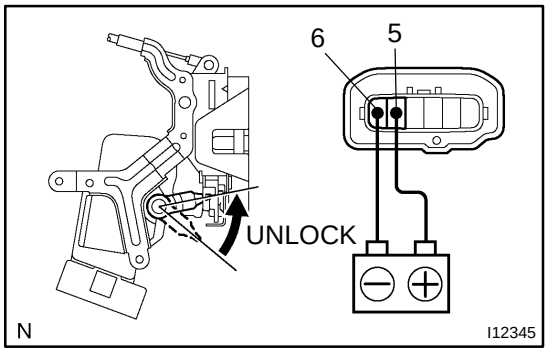

9. Front right side door:
INSPECT DOOR LOCK MOTOR OPERATION

(a) Connect the positive (+) lead from the battery to terminal 5 and the negative (-) lead to terminal 6, and check that the door lock link moves to UNLOCK position.

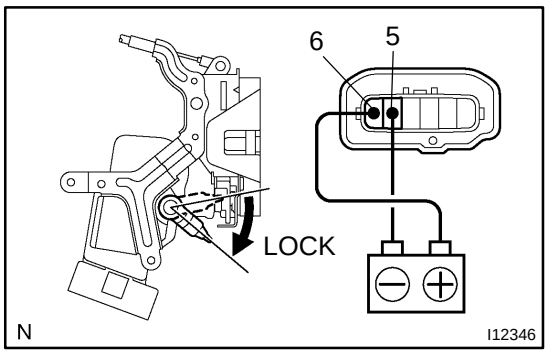

(b) Reverse the polarity and check that the door lock link moves to LOCK position.

If operation is not as specified, replace the door lock assembly.

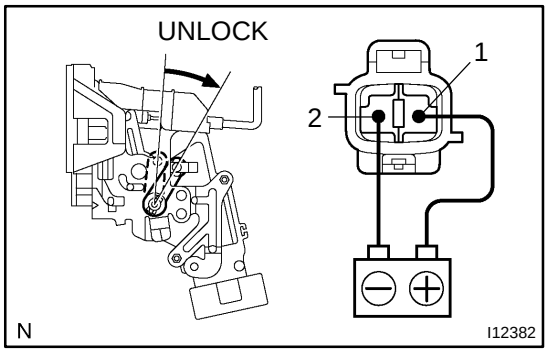

10. Rear left side door (Except Puerto Rico models): INSPECT DOOR LOCK MOTOR OPERATION

(a) Connect the positive (+) lead from the battery to terminal 1 and the negative (-) lead to terminal 2, and check that the door lock link moves to UNLOCK position.

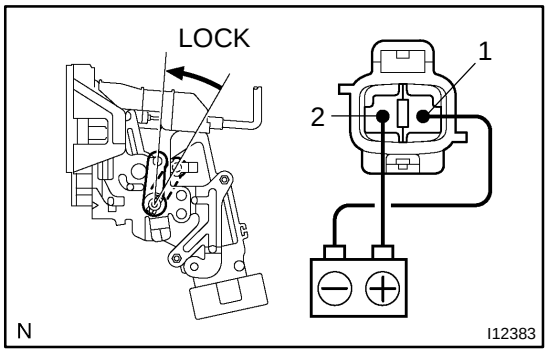

(b) Reverse the polarity and check that the door lock link moves to LOCK position.

If operation is not as specified, replace the door lock assembly.

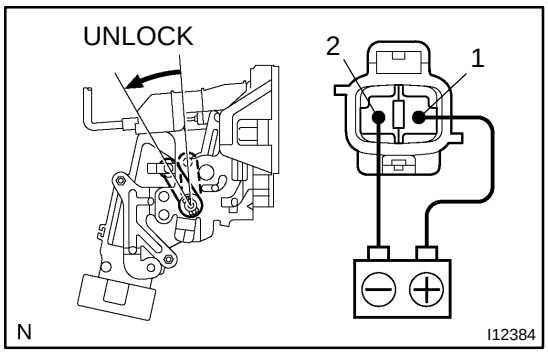

11. Rear right side door (Except Puerto Rico models): INSPECT DOOR LOCK MOTOR OPERATION

(a) Connect the positive (+) lead from the battery to terminal 1 and the negative (-) lead to terminal 2, and check that the door lock link moves to UNLOCK position.

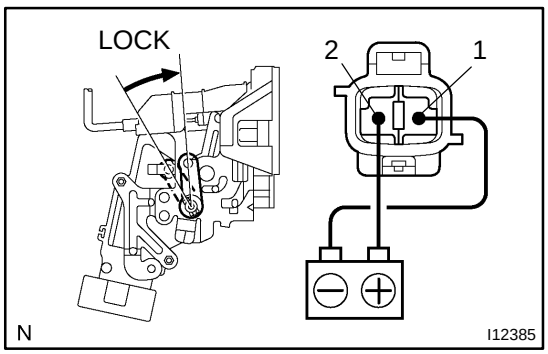

(b) Reverse the polarity and check that the door lock link moves to LOCK position.

If operation is not as specified, replace the door lock assembly.

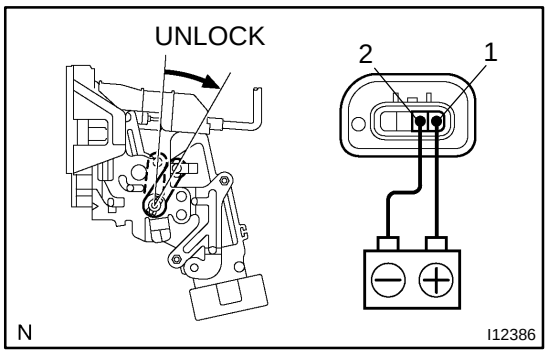

12. Rear left side door (Puerto Rico models): INSPECT DOOR LOCK MOTOR OPERATION

(a) Connect the positive (+) lead from the battery to terminal 1 and the negative (-) lead to terminal 2, and check that the door lock link moves to UNLOCK position.

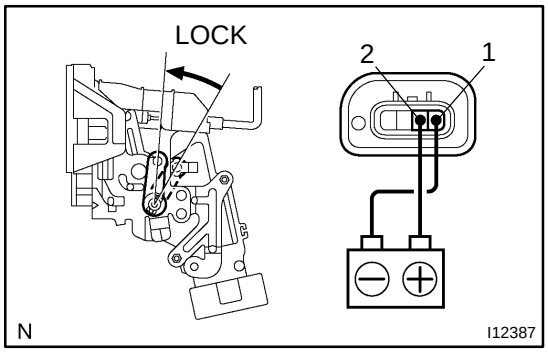

(b) Reverse the polarity and check that the door lock link moves to LOCK position.

If operation is not as specified, replace the door lock assembly.

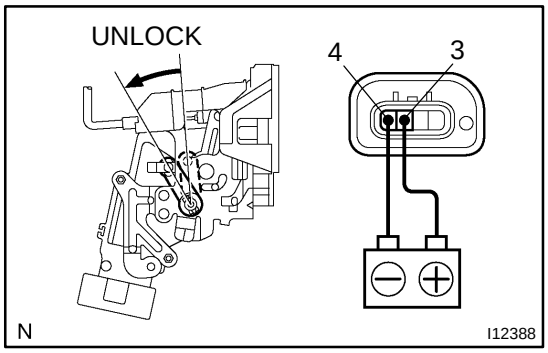

13. Rear right side door (Puerto Rico models): INSPECT DOOR LOCK MOTOR OPERATION

(a) Connect the positive (+) lead from the battery to terminal 3 and the negative (-) lead to terminal 4, and check that the door lock link moves to UNLOCK position.

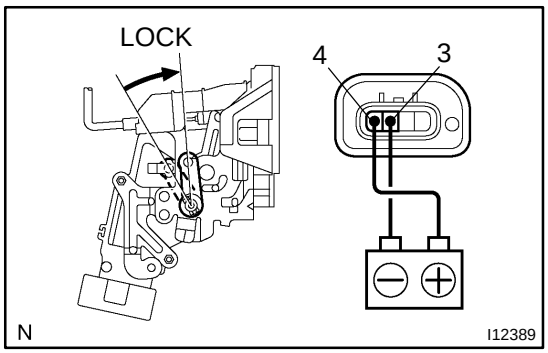

(b) Reverse the polarity and check that the door lock link moves to LOCK position.

If operation is not as specified, replace the door lock assembly.

Wire harness side:

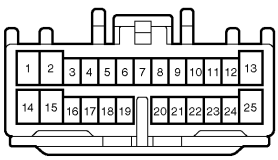

N I12350

14. INSPECT DOOR LOCK CONTROL RELAY CIRCUIT

Disconnect the connector from the door lock control relay and inspect the connector on the wire harness side, as shown in the chart.

Tester connection	Condition	Specified condition
5 - Ground	Driver door unlock detection switch OFF (door locked)	No continuity
5 - Ground	Driver door unlock detection switch ON (door unlocked)	Continuity
7 - Ground	Driver's and passenger's door lock control switch UNLOCK or OFF	No continuity
7 - Ground	Driver's or passenger's door lock control switch LOCK	Continuity
8 - Ground	Driver's and passenger's door lock control switch LOCK or OFF	No continuity
8 - Ground	Driver's or passenger's door lock control switch UNLOCK	Continuity
9 - Ground	Driver's door key lock and unlock switch UNLOCK or OFF	No continuity
9 - Ground	Driver's door key lock and unlock switch LOCK	Continuity
9 - Ground	Front passenger's door key lock and unlock switch UNLOCK or OFF	No continuity
9 - Ground	Front passenger's door key lock and unlock switch LOCK	Continuity
10 - Ground	Driver's door key lock and unlock switch LOCK or OFF	No continuity
10 - Ground	Driver's door key lock and unlock switch UNLOCK	Continuity
11 - Ground	Front passenger's door key lock and unlock switch LOCK or OFF	No continuity
11 - Ground	Front passenger's door key lock and unlock switch UNLOCK	Continuity
18 - Ground	Driver's door courtesy switch OFF	No continuity
18 - Ground	Driver's door courtesy switch ON	Continuity
19 - Ground	Front passenger's door courtesy switch OFF	No continuity
19 - Ground	Front passenger's door courtesy switch ON	Continuity
19 - Ground	Rear left side door courtesy switch OFF	No continuity
19 - Ground	Rear left side door courtesy switch ON	Continuity
19 - Ground	Rear right side door courtesy switch OFF	No continuity
19 - Ground	Rear right side door courtesy switch ON	Continuity
25 - Ground	Constant	Continuity
3 - Ground	Ignition switch OFF	No voltage

3 - Ground	Ignition switch ON	Battery positive voltage
14 - Ground	Constant	Battery positive voltage

If circuit is as specified, inspect the door lock signal.

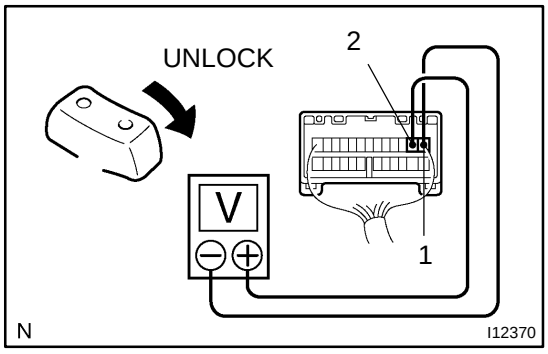

15. Driver's door lock signal:
INSPECT DOOR LOCK CONTROL RELAY OPERATION

HINT:

When the relay circuit is as specified, inspect the door lock signal.

(a) Connect the positive (+) lead from the voltmeter to terminal 2 and the negative (-) lead to terminal 1.

(b) Set the door lock control switch to UNLOCK and check that the voltage rises from 0 V to battery positive voltage for approximately 0.2 seconds.

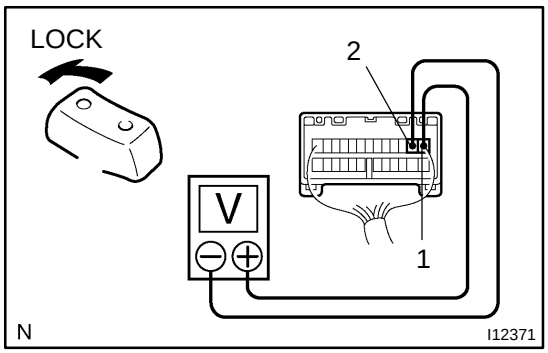

(c) Reverse the polarity of the voltmeter leads.

(d) Set the door lock control switch to LOCK and check that the voltage rises from 0 V to battery positive voltage for approximately 0.2 seconds.

If operation is not as specified, replace the relay.

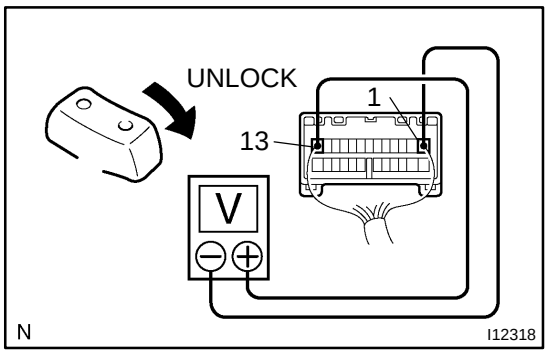

16. Except driver's door lock signal:
INSPECT DOOR LOCK CONTROL RELAY OPERATION

HINT:

When the relay circuit is as specified, inspect the door lock signal.

(a) Connect the positive (+) lead from the voltmeter to terminal 13 and the negative (-) lead to terminal 1.

(b) Set the door lock control switch to UNLOCK and check that the voltage rises from 0 V to battery positive voltage for approximately 0.2 seconds.

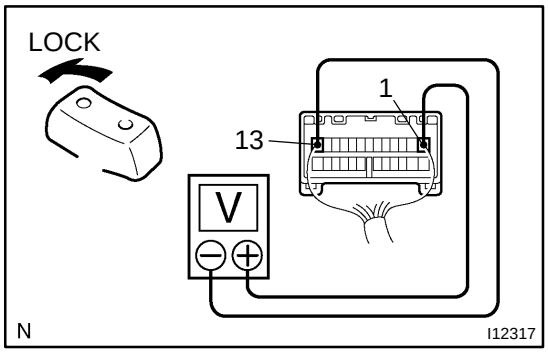

(c) Reverse the polarity of the voltmeter leads.

(d) Set the door lock control switch to LOCK and check that the voltage rises from 0 V to battery positive voltage for approximately 0.2 seconds.

If operation is not as specified, replace the relay.

POWER DOOR LOCK CONTROL SYSTEM

BE18V-03

LOCATION

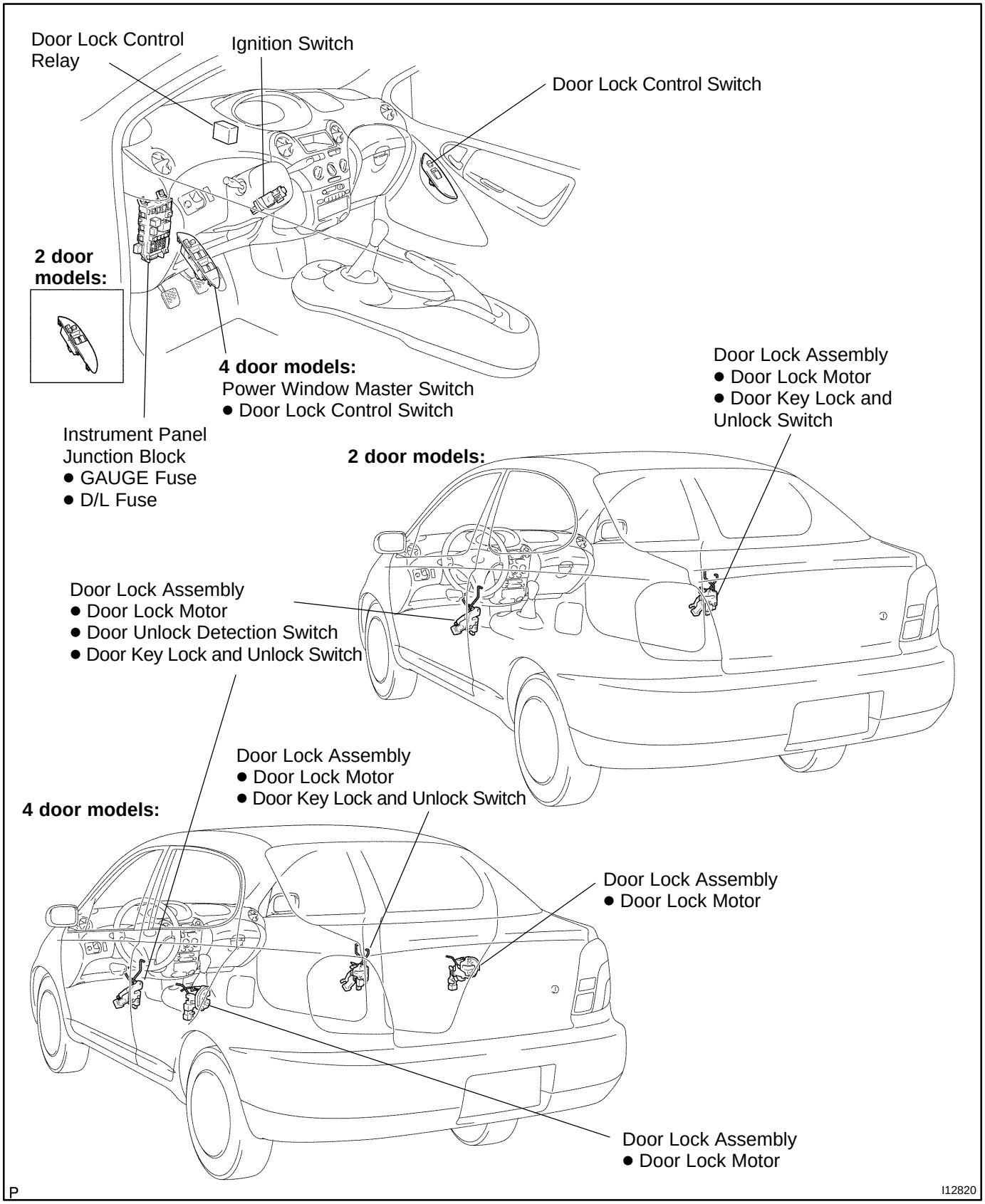

POWER SOURCE

BE183-03

LOCATION

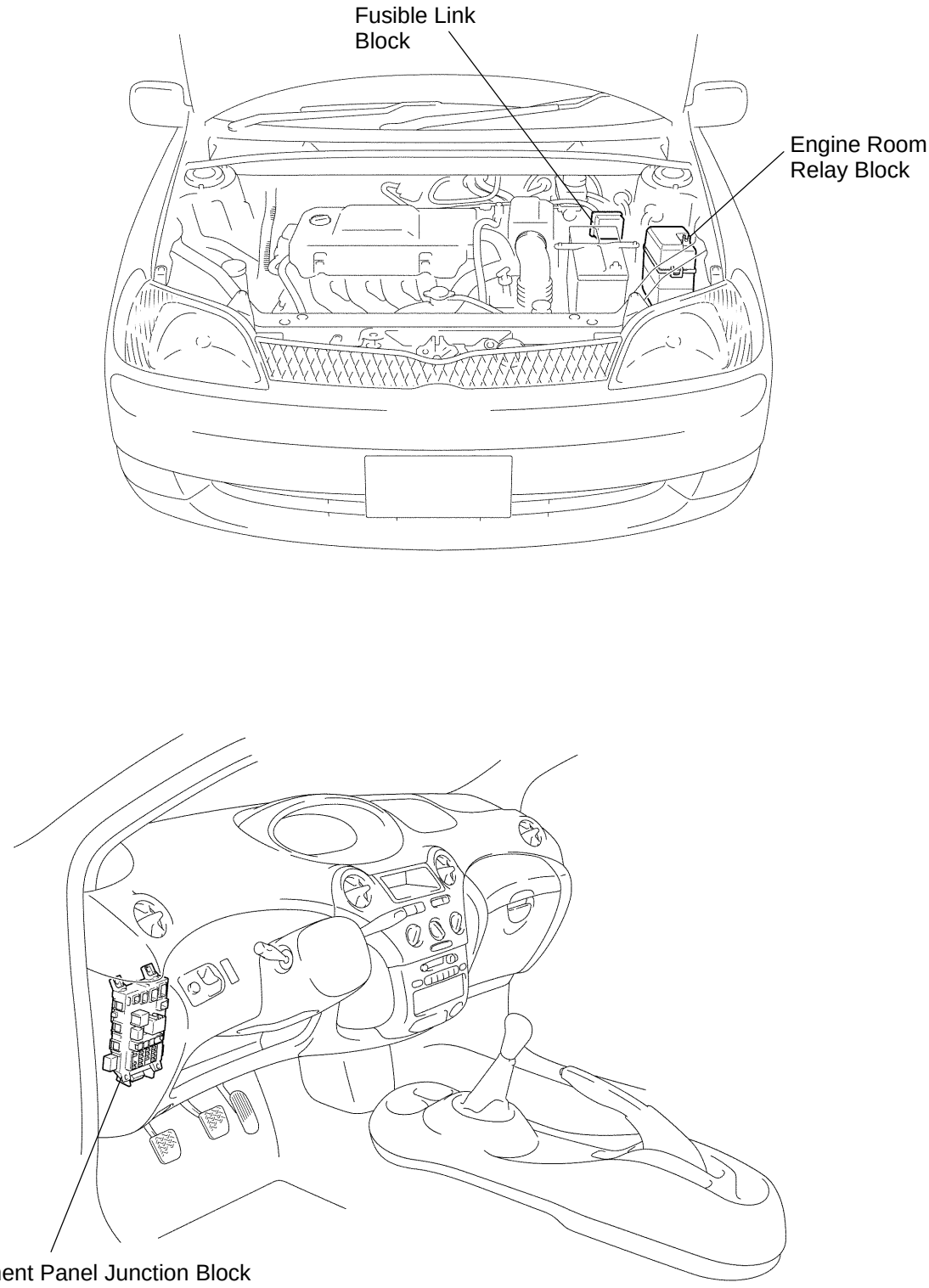

P

I12808

Instrument panel junction block:

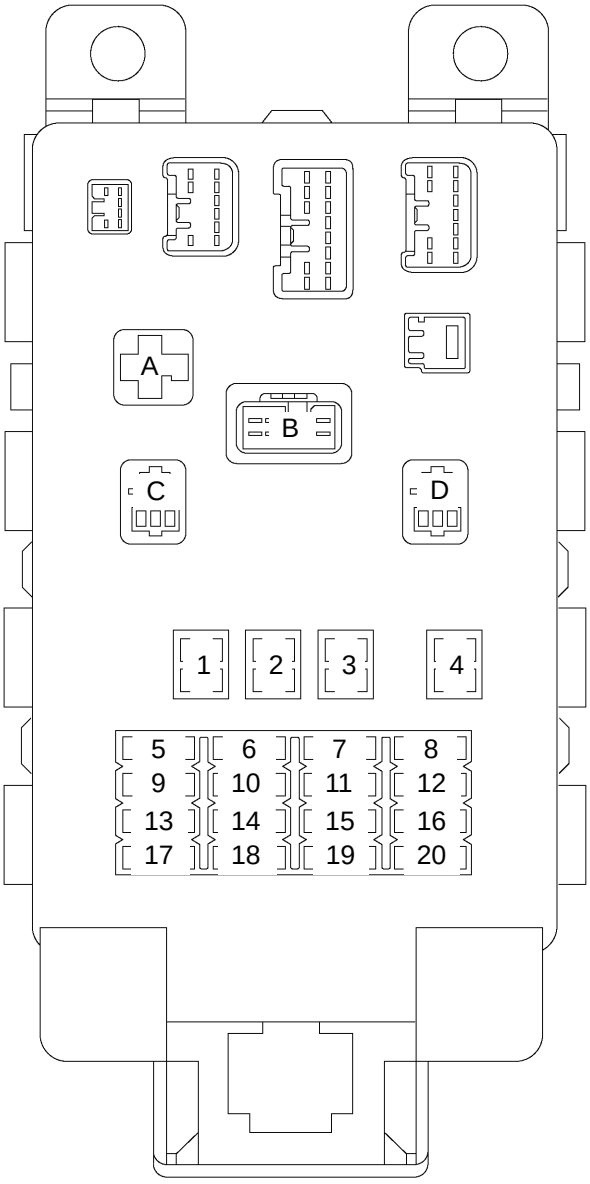

Fuses

1. AM1 Fuse
2. POWER Fuse
3. HTR Fuse
4. DEF Fuse
5. GAUGE Fuse
6. -
7. D/L Fuse
8. TAIL Fuse
9. -
10. WIPER Fuse
11. ECU-B Fuse
12. -
13. ACC Fuse
14. ECU-IG Fuse
15. OBD Fuse
16. HAZ Fuse
17. A/C Fuse
18. -
19. -
20. STOP Fuse

Relays

A. Heater Relay
B. FLASHER Relay
C. Power Main Relay
D. C/OPN Relay

Y

I12040

Engine room relay block:

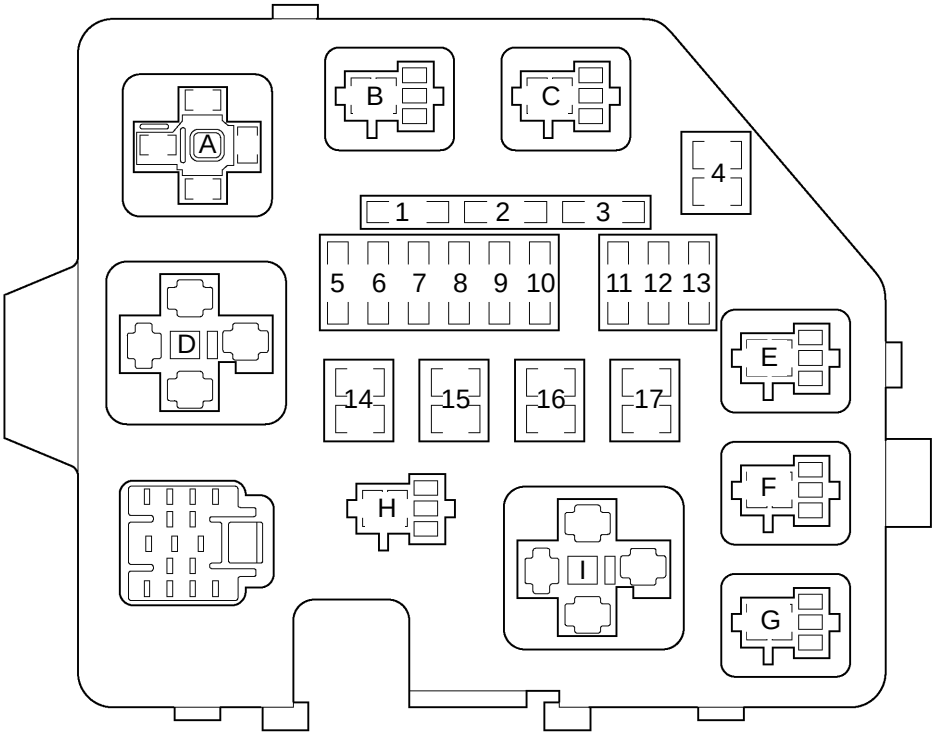

Fuses

1. SPARE Fuse
2. SPARE Fuse
3. -
4. -
5. DOME Fuse
6. EFI Fuse
7. HORN Fuse
8. AM2 Fuse
9. ST Fuse
10. -
11. H-LP LH Fuse
12. H-LP RH Fuse
13. -
14. -
15. RDI Fuse
16. HTR SUB1 Fuse
17. -

Relays

A. ST Relay
B. FAN NO. 2 Relay
C. FAN NO. 1 Relay
D. -
E. EFI Relay
F. A/C MG Relay
G. HORN Relay
H. DRL NO. 5 Relay
I. HTR SUB1 Relay

Y

I12041

Fusible link block:

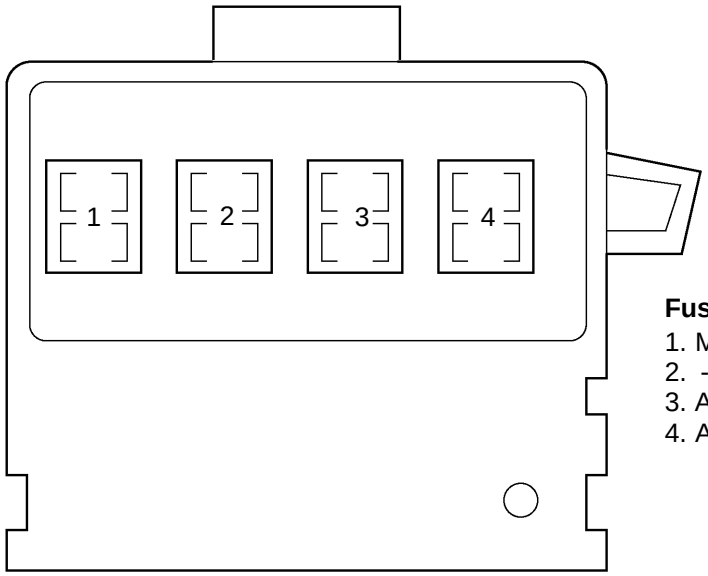

Fuses
1. MAIN Fuse
2. -
3. ALT Fuse
4. ABS Fuse

Y

I12358

BE1FC-01

INSPECTION

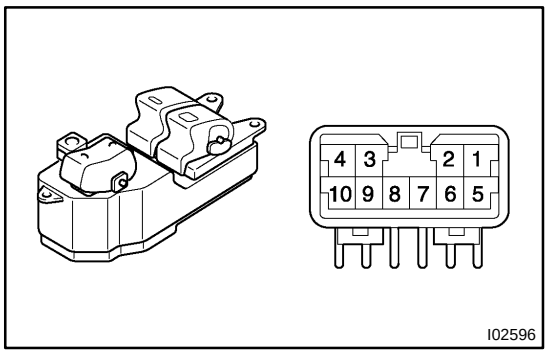

1. 2 door models :

INSPECT POWER WINDOW MASTER SWITCH CONTINUITY

Driver's switch :

Switch position	Tester connection	Specified condition
UP	1 - 4 3 - 9	Continuity
OFF	1 - 3 1 - 4	Continuity
DOWN	1 - 3 4 - 9	Continuity

Passenger's switch (Window unlock) :

Switch position	Tester connection	Specified condition
UP	1 - 10 8 - 9	Continuity
OFF	1 - 8 1 - 10	Continuity
DOWN	1 - 8 9 - 10	Continuity

Passenger's switch (Window lock) :

Switch position	Tester connection	Specified condition
UP	8 - 9	Continuity
OFF	8 - 10	Continuity
DOWN	9 - 10	Continuity

If continuity is not as specified, replace the switch.

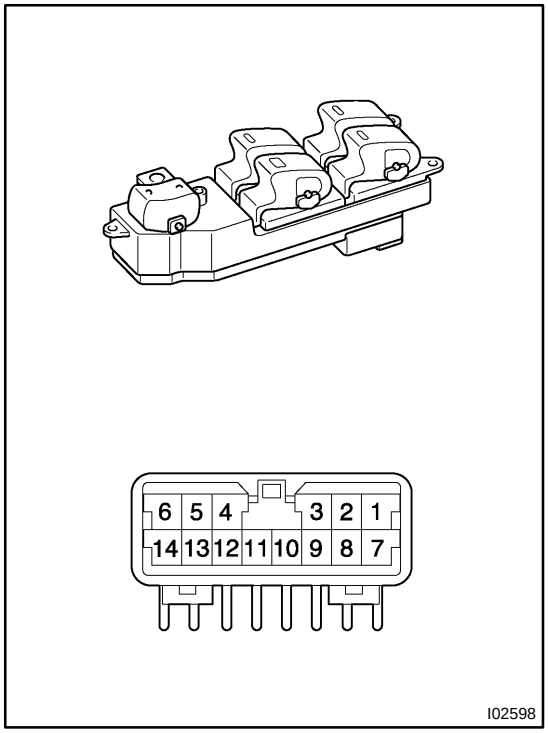

2. 4 door models :

INSPECT POWER WINDOW MASTER SWITCH CONTINUITY

Front driver's switch :

Switch position	Tester connection	Specified condition
UP	1 - 10, 1 - 11 3 - 5, 4 - 5	Continuity
OFF	1 - 3, 1 - 4 3 - 5, 4 - 5	Continuity
DOWN	5 - 10, 5 - 11 1 - 3, 1 - 4	Continuity

Front passenger's switch (Window unlock) :

Switch position	Tester connection	Specified condition
UP	10 - 14, 11 - 14 3 - 6, 4 - 6	Continuity
OFF	3 - 14, 4 - 14 3 - 6, 4 - 6	Continuity
DOWN	6 - 10, 6 - 11 3 - 14, 4 - 14	Continuity

Front passenger's switch (Window lock) :

Switch position	Tester connection	Specified condition
UP	10 - 14, 11 - 14	Continuity
OFF	6 - 14	Continuity
DOWN	6 - 10, 6 - 11	Continuity

Rear left switch (Window unlock) :

Switch position	Tester connection	Specified condition
UP	9 - 10, 9 - 11 3 - 12, 4 - 12	Continuity
OFF	3 - 9, 4 - 9 3 - 12, 4 - 12	Continuity
DOWN	10 - 12, 11 - 12 3 - 9, 4 - 9	Continuity

Rear left switch (Window lock) :

Switch position	Tester connection	Specified condition
UP	9 - 10, 9 - 11	Continuity
OFF	9 - 12	Continuity
DOWN	10 - 12, 11 - 12	Continuity

Rear right switch (Window unlock) :

Switch position	Tester connection	Specified condition
UP	8 - 10, 8 - 11 3 - 13, 4 - 13	Continuity
OFF	3 - 8, 4 - 8 3 - 13. 4 - 13	Continuity
DOWN	10 - 13, 11 - 13 3 - 8, 4 - 8	Continuity

Rear right switch (Window lock) :

Switch position	Tester connection	Specified condition
UP	8 - 10, 8 - 10	Continuity
OFF	8 - 13	Continuity
DOWN	10 - 13, 11 - 13	Continuity

If continuity is not as specified, replace the master switch.

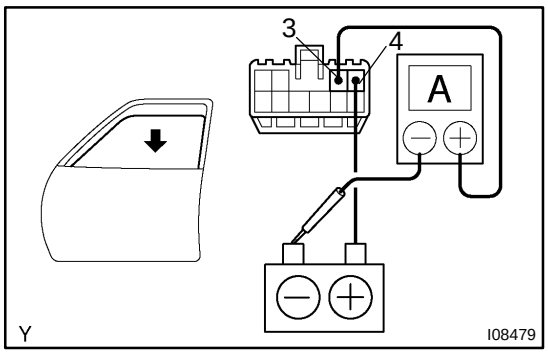

3. 2 door models :
INSPECT ONE TOUCH POWER WINDOW SYSTEM (Using an ammeter)

(a) Disconnect the connector from the master switch.
(b) Connect the positive (+) lead from the ammeter to terminal 3 on the wire harness side connector and the negative (-) lead to the negative (-) terminal of the battery.
(c) Connect the positive (+) lead from the battery to terminal 4 on the wire harness side connector.
(d) As the window goes down, check that the current is approximately 7 A.

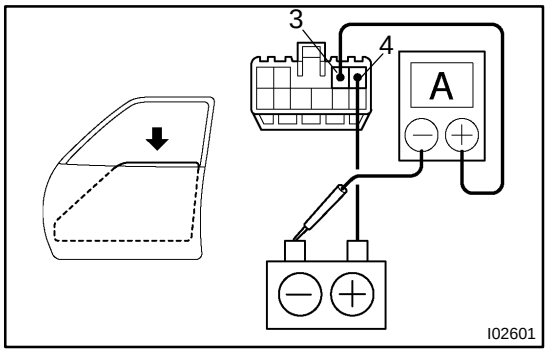

(e) Check that the current increases up to approximately 14.5 A or more when the window stops going down.

HINT:
The circuit breaker opens for 7 - 13 seconds after the window stops going down, so that check must be made before the circuit breaker operates.
If operation is not as specified, replace the master switch.

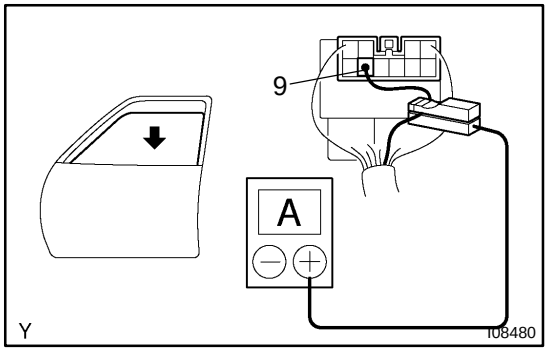

4. 2 door models :
INSPECT ONE TOUCH POWER WINDOW SYSTEM (Using an ammeter with a current - measuring probe)

(a) Remove the master switch with connector connected.
(b) Attach a current - measuring probe to terminal 9 of the wire harness.
(c) Turn the ignition switch ON, and set the power window switch in the down position.

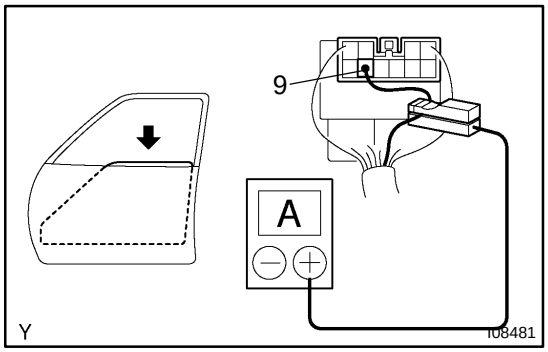

(d) As the window goes down, check that the current is approximately 7 A.
(e) Check that the current increases up to approximately 14.5 A or more when the window stops going down.

HINT:
The circuit breaker opens for 7 - 13 seconds after the window stops going down, so that check must be made before the circuit breaker operates.
If operation is not as specified, replace the master switch.

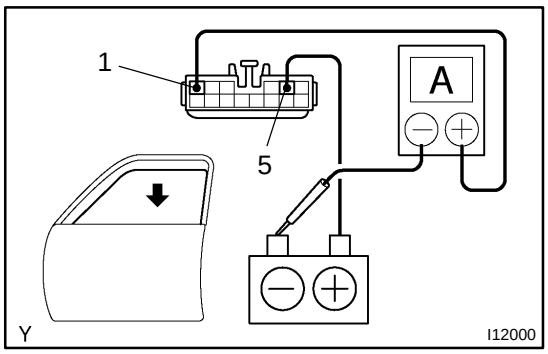

5. 4 door models :
INSPECT ONE TOUCH POWER WINDOW SYSTEM (Using an ammeter)

(a) Disconnect the connector from the master switch.
(b) Connect the positive (+) lead from the ammeter to terminal 1 on the wire harness side connector and the negative (-) lead to the negative terminal of the battery.
(c) Connect the positive (+) lead from the battery to terminal 5 on the wire harness side connector.
(d) As the window goes down, check that the current flow is approximately 7 A.

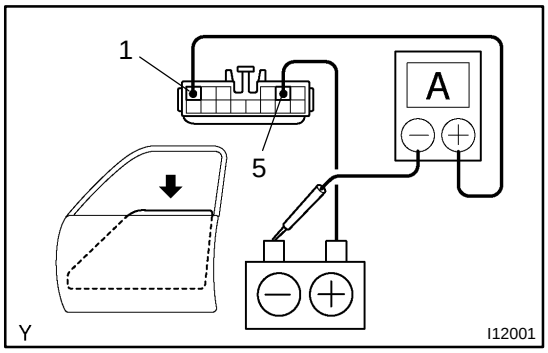

(e) Check that the current increases up to approximately 14.5 A or more when the window stops going down.

HINT:
The circuit breaker opens some 4 - 40 seconds after the window stops going down, so that check must be made before the circuit breaker operates.
If the operation is as specified, replace the master switch.

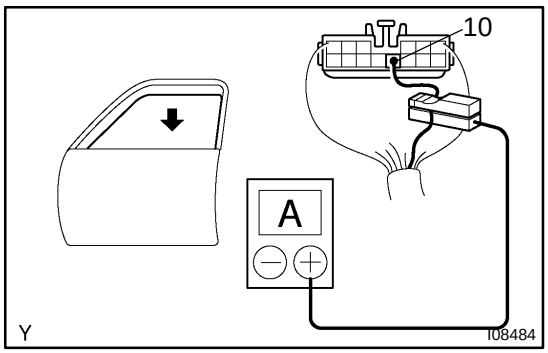

6. 4 door models :
INSPECT ONE TOUCH POWER WINDOW SYSTEM (Using an ammeter with a current - measuring probe)

(a) Remove the master switch with connector connected.
(b) Attach a current - measuring probe to terminal 10 of the wire harness.
(c) Turn the ignition switch ON and set the power window switch in the down position.
(d) As the window goes down, check that the current flow is approximately 7 A.

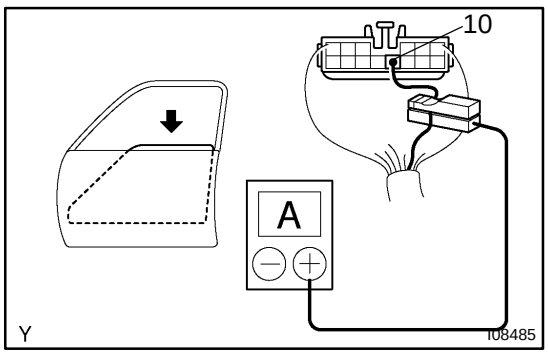

(e) Check that the current increases up to approximately 14.5 A or more when the window stops going down.

HINT:
The circuit breaker opens for 4 - 40 seconds after the window stops going down, so that check must be made before the circuit breaker operates.
If operation is as specified, replace the master switch.

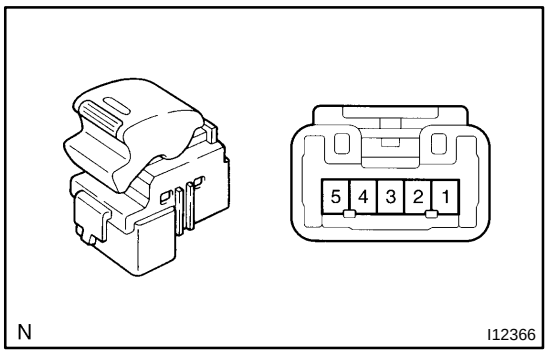

7. INSPECT PASSENGER'S POWER WINDOW SWITCH CONTINUITY

Switch position	Tester connection	Specified condition
UP	1 - 2, 3 - 4	Continuity
OFF	1 - 2, 3 - 5	Continuity
DOWN	1 - 4, 3 - 5	Continuity

If continuity is not as specified, replace the switch.

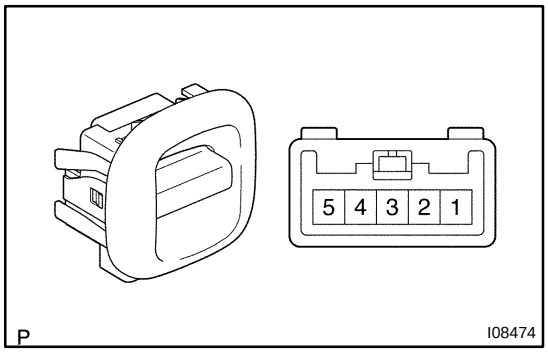

8. 4 door models:
INSPECT REAR DOOR POWER WINDOW SWITCH CONTINUITY

Switch position	Tester connection	Specified condition
UP	1 - 2, 3 - 4	Continuity
OFF	1 - 2, 4 - 5	Continuity
DOWN	2 - 3, 4 - 5	Continuity

If continuity is not as specified, replace the switch.

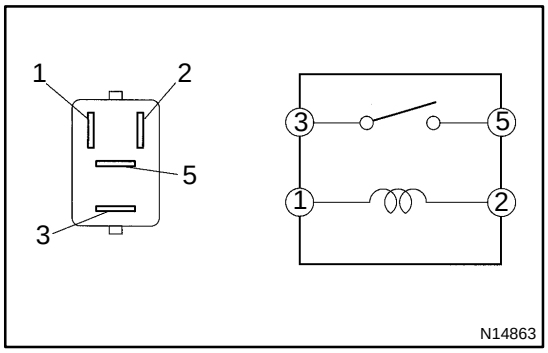

9. INSPECT POWER MAIN RELAY CONTINUITY

Condition	Tester connection	Specified condition
Constant	1 - 2	Continuity
Apply B + between terminals 1 and 2	3 - 5	Continuity

If continuity is not as specified, replace the switch.

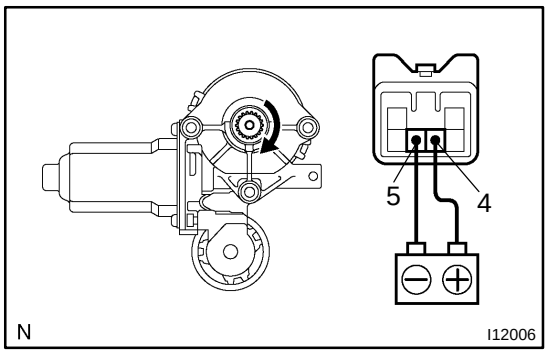

10. Front left side door:
INSPECT POWER WINDOW MOTOR OPERATION

(a) Connect the positive (+) lead from the battery to terminal 4 and the negative (-) lead to terminal 5, and check that the motor turns clockwise.

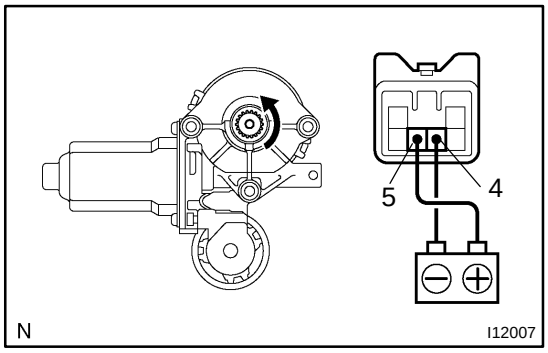

(b) Reverse the polarity, check that the motor turns counter-clockwise.

If operation is not as specified, replace the motor.

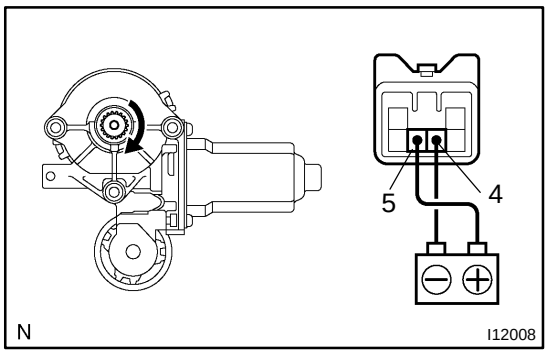

11. Front right side door:
INSPECT POWER WINDOW MOTOR OPERATION

(a) Connect the positive (+) lead from the battery to terminal 5 and the negative (-) lead to terminal 4, and check that the motor turns clockwise.

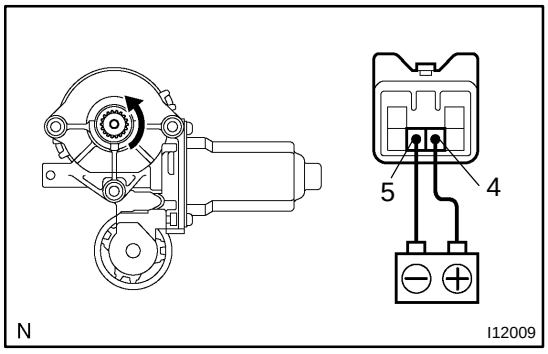

(b) Reverse the polarity, check that the motor turns counter-clockwise.

If operation is not as specified, replace the motor.

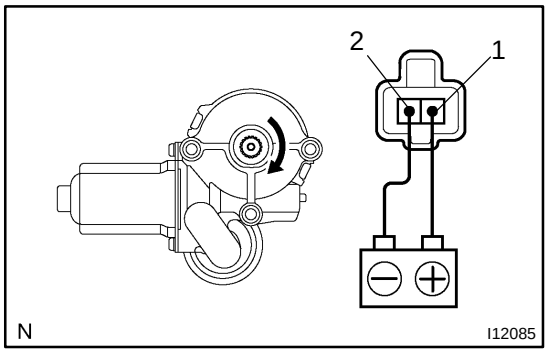

12. Rear left side door:
INSPECT POWER WINDOW MOTOR OPERATION

(a) Connect the positive (+) lead from the battery to terminal 1 and the negative (-) lead to terminal 2, and check that the motor turns clockwise.

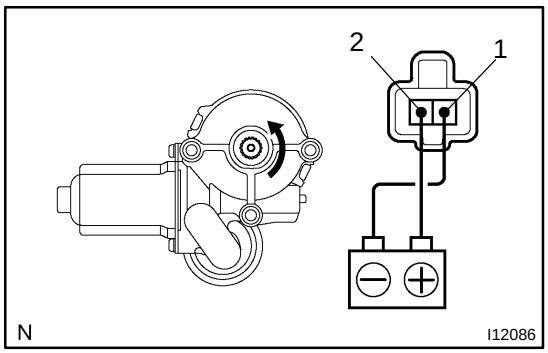

(b) Reverse the polarity, check that the motor turns counter-clockwise.

If operation is not as specified, replace the motor.

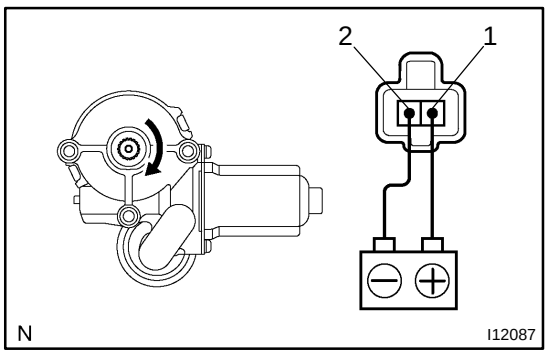

13. Rear right side door:
INSPECT POWER WINDOW MOTOR OPERATION

(a) Connect the positive (+) lead from the battery to terminal 1 and the negative (-) lead to terminal 2, and check that the motor turns clockwise.

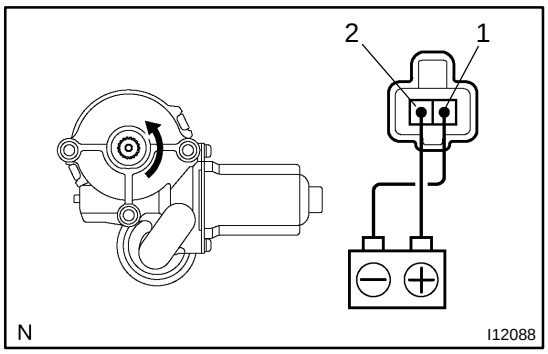

(b) Reverse the polarity, check that the motor turns counter-clockwise.

If operation is not as specified, replace the motor.

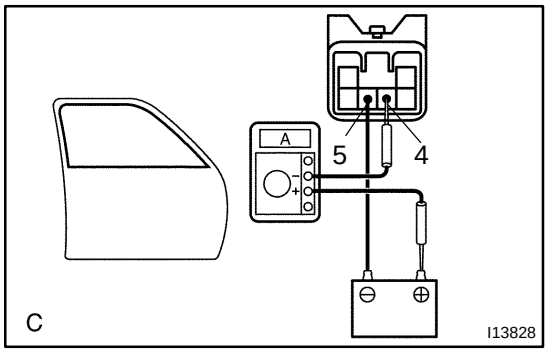

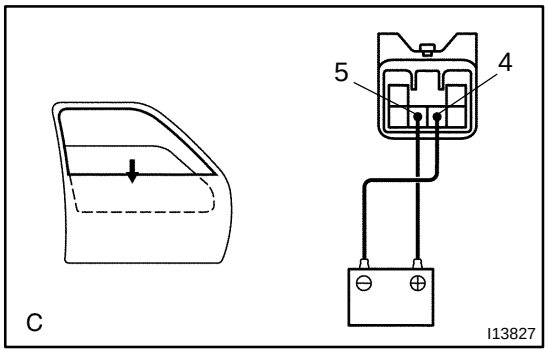

14. Front Door:
INSPECT POWER WINDOW MOTOR PTC THERMISTOR OPERATION

(a) Disconnect the connector from the Driver door Window motor.
(b) Connect the positive (+) lead from the ammeter to terminal 5 on the wire harness side connector and the negative (-) lead to negative terminal of the battery.
(c) Connect the positive (+) lead from the battery to terminal 4 on the wire harness side connector, and raise the window to the fully position.
(d) Continue to apply voltage, and check that the current changes to less than 1 A within 4 to 90 seconds.
(e) Disconnect the leads from the terminals.
(f) Approximately 60 seconds later, connect the positive (+) lead from the battery to terminal 5 and the negative (-) lead to terminal 4, and check that the window begins to descend.

If operation is not as specified, replace the motor.

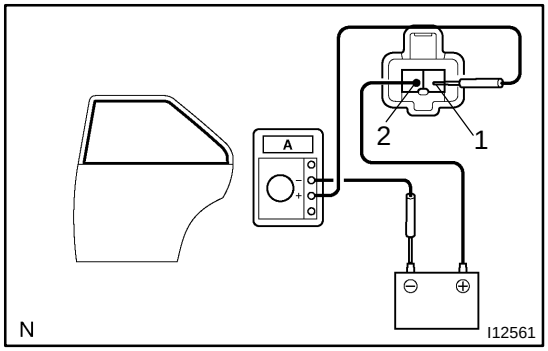

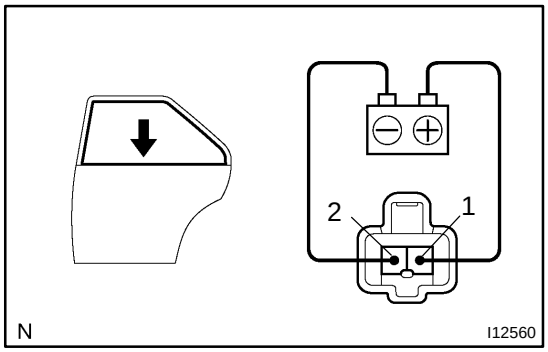

15. Rear LH door:
INSPECT POWER WINDOW MOTOR PTC THERMISTOR OPERATION

(a) Disconnect the connector from the power window motor.
(b) Connect the positive (+) lead from the ammeter to terminal 1 on the wire harness side connector and the negative (-) lead to negative terminal of the battery.
(c) Connect the positive (+) lead from the battery to terminal 2 on the wire harness side connector, and raise the window to the fully position.
(d) Continue to apply voltage and check that the current changes to less than 1 A within 4 to 90 seconds.
(e) Disconnect the leads from the terminals.
(f) Approximately 60 seconds later, connect the positive (+) lead from the battery to terminal 1 and the negative (-) lead to terminal 2, and check that the window begins to descend.

If operation is not as specified, replace the motor.

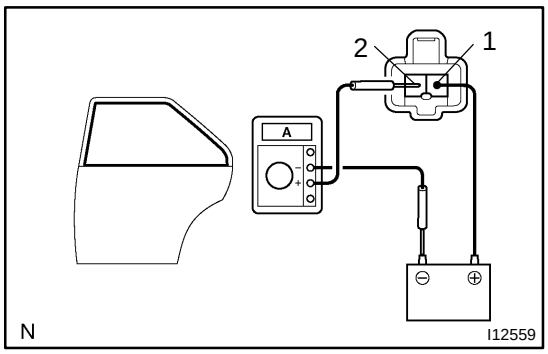

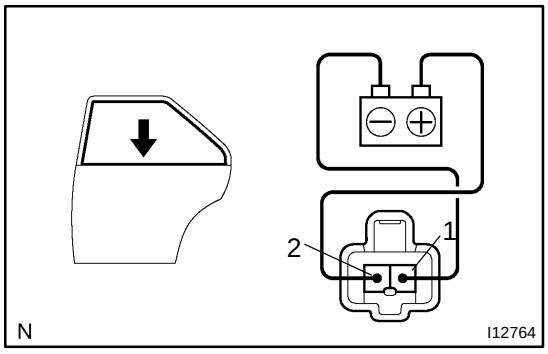

16. Rear RH Door:

INSPECT POWER WINDOW MOTOR PTC THERMISTOR OPERATION

(a) Disconnect the connector from the power window motor.

(b) Connect the positive (+) lead from the ammeter to terminal 2 on the wire harness side connector and the negative (-) lead to negative terminal of the battery.

(c) Connect the positive (+) lead from the battery to terminal 1 on the wire harness side connector, and raise the window to the fully position.

(d) Continue to apply voltage and check that the current changes to less than 1 A within 4 to 90 seconds.

(e) Disconnect the leads from the terminals.

(f) Approximately 60 seconds later, connect the positive (+) lead from the battery to terminal 2 and the negative (-) lead to terminal 1, and check that the window begins to descend.

POWER WINDOW CONTROL SYSTEM

BE18T-03

LOCATION

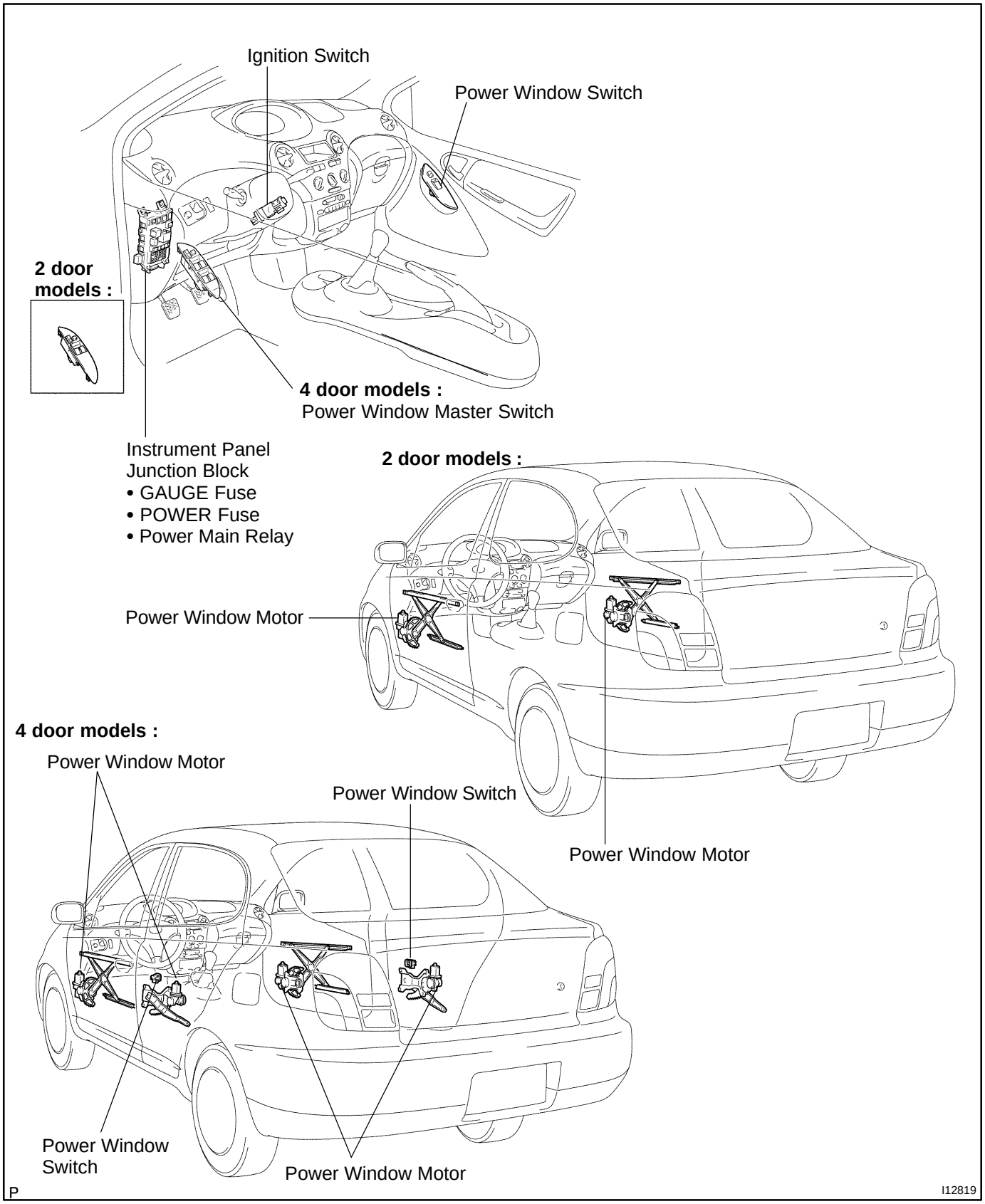

BE022-04

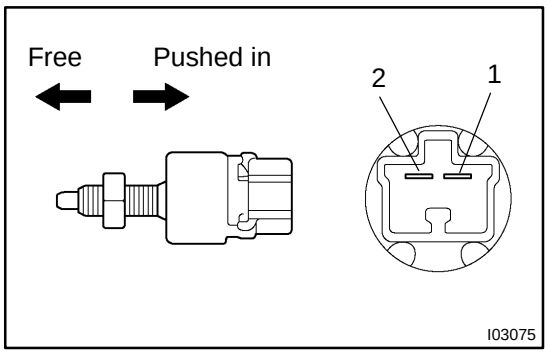

INSPECTION

1. INSPECT STOP LIGHT SWITCH CONTINUITY

Switch position	Tester connection	Specified condition
Switch pin pushed in (Pedal released)	-	No continuity
Switch pin free (Pedal depressed)	1 - 2	Continuity

If continuity is not as specified, replace the switch.

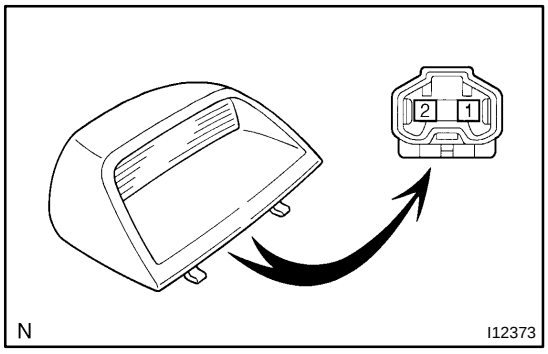

2. INSPECT HI-MOUNTED STOP LIGHT CONTINUITY

Using the ohmmeter, check that continuity exists between terminals.

If continuity is not as specified, replace the light assembly or bulb.

STOP LIGHT SYSTEM

LOCATION

BE18L-03

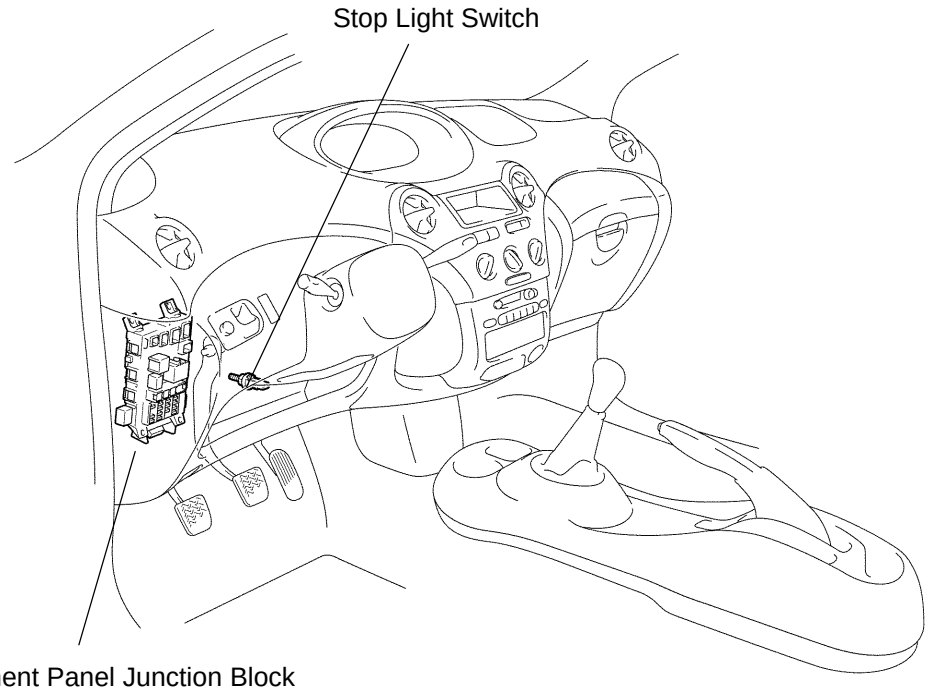

Instrument Panel Junction Block
- STOP Fuse

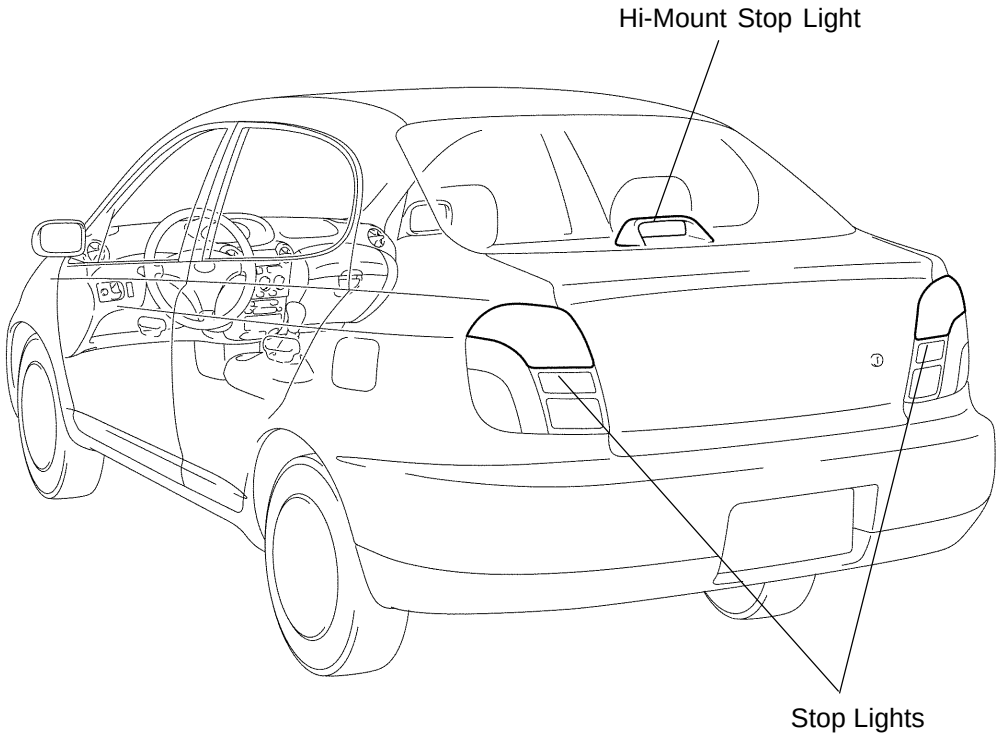

P

I12814

TROUBLESHOOTING

BE182-04

PROBLEM SYMPTOMS TABLE

IGNITION SWITCH:

Symptom	Suspect Area	See page
Ignition switch is not set to each position.	11. Ignition Switch 12. Power Source Circuit	BE-15 -

KEY UNLOCK WARNING SWITCH:

Symptom	Suspect Area	See page
Key unlock warning system does not operate. (The buzzer sounds when the ignition key is ACC or ON)	1. Ignition Switch 2. Key Unlock Warning Switch 3. Wire Harness 4. Combination Meter	BE-15 BE-15 - -

w/o Daytime Running Light System:

HEADLIGHT AND TAILLIGHT SYSTEM

Symptom	Suspect Area	See page
Only one headlight comes on.	1. Bulb 2. H-LP LH or RH Fuse 3. Wire Harness	- - -
”LO-Beam” does not light.	1. Light Control Switch 2. Wire Harness	BE-21 -
”HI-Beam” does not light.	1. Headlight Dimmer Switch 2. Light Control Switch 3. Wire Harness	BE-21 BE-21 -
”Flash” does not light.	1. Headlight Dimmer Switch 2. Wire Harness	BE-21 -
Headlight does not come on.	1. Light Control Switch 2. Headlight Control Relay 3. Wire Harness	BE-21 BE-21 -
Headlight flickers.	1. Bulb 2. Wire Harness	- -
Headlight is dark.	1. Bulb 2. Wire Harness	- -
Only one taillight comes on.	1. Bulb 2. Wire Harness	- -
Taillight does not come on. (Headlight is normal)	1. TAIL Fuse 2. Taillight Control Relay 3. Light Control Switch 4. Wire Harness	- BE-21 BE-21 -
Taillight does not come on. (Headlight does not light)	1. Light Control Switch 2. Wire Harness	BE-21 -
Rear combination light does not come on.	1. Wire Harness 2. Bulb	- -

w/ Daytime Running Light System:
HEADLIGHT AND TAILLIGHT SYSTEM

Symptom	Suspect Area	See page
Only one headlight comes on.	1. Bulb 2. H-LP LH or RH Fuse 3. Wire Harness	- - -
”LO-Beam” does not light.	1. Light Control Switch 2. Wire Harness	BE-21 -
”HI-Beam” does not light.	1. Headlight Dimmer Switch 2. Light Control Switch 3. Wire Harness	BE-21 BE-21 -
”Flash” does not light.	1. Headlight Dimmer Switch 2. Wire Harness	BE-21 -
Headlight does not come on.	1. Daytime Running Light Relay 2. Daytime Running Light No. 5 Relay 3. Headlight Dimmer Switch 4. Light Control Switch 5. Headlight Control Relay 6. Wire Harness 7. Bulb	BE-21 BE-21 BE-21 BE-21 BE-21 - -
Headlight does not come on with light control switch in HEAD.	1. Light Control Switch 2. Wire Harness	BE-21 -
Headlight does not go out with light control switch in OFF.	1. Headlight Control Relay 2. Wire Harness	BE-21 -
Headlight flickers.	1. Bulb 2. Wire Harness	- -
Headlight is dark.	1. Bulb 2. Wire Harness	- -
Taillight does not come on with light control switch in TAIL.	1. Taillight Control Relay 2. Light Control Switch 3. Wire Harness	BE-21 BE-21 -
Taillight does not go out with light control switch in OFF.	1. Taillight Control Relay 2. Light Control Switch 3. Wire Harness	BE-21 BE-21 -
Headlight does not come on with engine running and light control switch in OFF.	1. ECU-B Fuse 2. GAUGE Fuse 3. Daytime Running Light Relay 4. Daytime Running Light No. 5 Relay 5. Generator L Terminal 6. Wire Harness	- - BE-21 BE-21 - -

TURN SIGNAL AND HAZARD WARNING SYSTEM:

Symptom	Suspect Area	See page
”Hazard” and ”Turn” do not light up.	1. Hazard Warning Switch 2. Turn Signal Flasher 3. Wire Harness	BE-29 BE-29 -
The flashing frequency is abnormal.	1. Bulb 2. Turn Signal Switch 3. Wire Harness	- BE-29 -
Hazard warning light does not light up. (Turn is normal.)	1. HAZ Fuse 2. Wire Harness	- -
Hazard warning light does not light up in one direction.	1. Hazard Warning Switch 2. Wire Harness	BE-29 -
*1Turn signal does not light up.	1. Ignition Switch 2. GAUGE Fuse 3. Turn Signal Switch 4. Wire Harness	BE-15 - BE-29 -
*2Turn signal does not light up.	1. GAUGE Fuse 2. Turn Signal Switch 3. Wire Harness	- BE-29 -
Turn signal does not light up in one direction.	1. Turn Signal Switch 2. Wire Harness	BE-29 -
Only one bulb does not light up.	1. Bulb 2. Wire Harness	- -

*1: Combination Meter, Wiper and Washer do not operate.
*2: Combination Meter, Wiper and Washer are normal.

INTERIOR LIGHT SYSTEM:

Symptom	Suspect Area	See page
Only one interior light does not light up.	1. Bulb 2. Wire Harness	- -
Interior light does not light up (All).	1. DOME Fuse 2. Wire Harness	- -
Room light does not light up.	1. Bulb 2. Room Light 3. Wire Harness	- BE-32 -

BACK-UP LIGHT SYSTEM:

Symptom	Suspect Area	See page
Back-Up Light does not light up.	1. GAUGE Fuse 2. Ignition Switch 3. Wire Harness 4. Bulb	- BE-15 - -
Back-Up Light remains always on.	1. Back-Up Light Switch (M/X) 2. Park/Neutral Position Switch (A/X) 3. Wire Harness	BE-35 DI-189 -
Only one light does not light up.	1. Bulb 2. Wire Harness	- -

STOP LIGHT SYSTEM:

Symptom	Suspect Area	See page
Stop light does not light up.	1. STOP Fuse 2. Stop Light Switch 3. Wire Harness	- BE-37 -
Only one light always lights up.	1. Wire Harness	-
Only one light does not light.	1. Bulb 2. Wire Harness	- -

WIPER AND WASHER SYSTEM:

Symptom	Suspect Area	See page
Wiper and washers do not operate.	1. WIPER Fuse 2. Wiper Switch 3. Wiper Motor 4. Wire Harness	- BE-39 BE-39 -
Wipers do not operate in LO or HI.	1. Wiper Switch 2. Wiper Motor 3. Wire Harness	BE-39 BE-39 -
Wipers do not operate in INT.	1. Wiper Switch 2. Wiper Motor 3. Wire Harness	BE-39 BE-39 -
Washer motor does not operate.	1. Washer Switch 2. Washer Motor 3. Wire Harness	BE-39 BE-39 -
Wipers do not operate when washer switch in ON.	1. Washer Motor 2. Wire Harness	BE-39 -
Washer fluid does not operate.	1. Washer Hose and Nozzle	-
● At wiper switch HI position, the wiper blade is in contact with the body. ● When the wiper switch is OFF, the wiper blade does not retract or the retract position wrong.	1. *1Wiper Switch 2. Wire Harness	BE-39 -

*1: Inspect wiper arm and blade set position

Meter Gauges and Illumination:
COMBINATION METER

Symptom	Suspect Area	See page
Tachometer, Fuel Gauge and Engine coolant Temperature Gauge does not operate.	1. GAUGE Fuse 2. Meter Circuit Plate 3. Wire Harness	- BE-44 -
Speedometer does not operate.	1. Vehicle Speed Sensor 2. Meter Circuit Plate 3. Wire Harness	BE-47 BE-44 -
Tachometer does not operate.	1. Igniter 2. ECM 3. Meter Circuit Plate 4. Wire Harness	- - BE-44 -
Fuel Gauge does not operate or abnormal operation.	1. Fuel Receiver Gauge 2. Fuel Sender Gauge 3. Meter Circuit Plate 4. Wire Harness	BE-47 BE-47 BE-44 -
All illumination lights do not light up.	1. TAIL Fuse 2. Meter Circuit Plate 3. Wire Harness	- BE-47 -
Brightness does not change even when rheostat turned.	1. Bulb 2. Wire Harness	- -
Only one illumination light does not light up.	1. Bulb 2. Wire Harness	- -

Warning Lights:
COMBINATION METER

Symptom	Suspect Area	See page
Warning light do not light up. (Except Discharge, Open Door and SRS)	1. GAUGE Fuse 2. Meter Circuit Plate 3. Wire Harness	- BE-44 -
Engine Coolant Temperature warning light does not light up.	1. Bulb (Engine coolant temperature warning light) 2. Engine Coolant Temperature Sender Gauge 3. ECM 4. Meter Circuit Plate 5. Wire Harness	- BE-47 - BE-44 -
Low Oil Pressure warning light does not light up.	1. Bulb 2. Low Oil Pressure Warning Switch 3. Meter Circuit Plate 4. Wire Harness	- BE-47 BE-44 -
ABS warning light does not light up.	1. Bulb 2. ABS ECU 3. Wire Harness	- DI-199 -
Seat Belt warning light does not light up.	1. Bulb 2. Buckle Switch 3. Occupant Detection Sensor (Passenger's seat only) 4. Meter Circuit Plate 5. Wire Harness	- BE-47 BE-47 BE-44 -
Discharge warning light does not light up.	1. Bulb 2. Wire Harness 3. Generator	- - CH-1
Brake warning light does not light up.	1. Bulb 2. Parking Brake Switch 3. Brake Fluid Level Warning Switch 4. Meter Circuit Plate 5. Wire Harness	- BE-47 BE-47 BE-44 -
SRS warning light does not light up.	1. Bulb 2. Airbag Sensor Assembly 3. Meter Circuit Plate 4. Wire Harness	- DI-237 BE-44 -
Open Door warning light does not light up.	1. DOME Fuse 2. Bulb 3. Door Courtesy Switch 4. Meter Circuit Plate 5. Wire Harness	- - BE-32 BE-44 -
Washer Level warning light does not light up.	1. Bulb 2. Washer Fluid Level Warning Switch 3. Meter Circuit Plate 4. Wire Harness	- BE-47 BE-44 -

Indicator Lights:
COMBINATION METER

Symptom	Suspect Area	See page
O/D OFF indicator light does not light up.	1. Bulb 2. O/D OFF Switch 3. Meter Circuit Plate 4. Wire Harness	- DI-196 BE-44 -
High beam indicator light does not light up.	1. Bulb 2. Meter Circuit Plate 3. Wire Harness 4. Headlight System	- BE-44 - BE-18
Turn indicator light does not light up.	1. Bulb 2. Meter Circuit Plate 3. Wire Harness 4. Turn Signal and Hazard Warning System	- BE-44 - BE-18
Malfunction indicator light does not light up.	1. Bulb 2. ECM 3. Meter Circuit Plate 4. Wire Harness	- - BE-44 -
Indicator lights do not light up. (Except Turn and Hi-beam)	1. GAUGE Fuse 2. Wire Harness	- -

DEFOGGER SYSTEM:

Symptom	Suspect Area	See page
All defogger systems do not operate.	1. DEF Fuse 2. Defogger Switch 3. Wire Harness	- BE-56 -
Rear window defogger does not operate.	1. Defogger Wire 2. Choke Coil 3. Wire Harness	BE-56 - -

POWER WINDOW CONTROL SYSTEM:

Symptom	Suspect Area	See page
Power window does not operate (ALL). (Power Door Lock does not operate)	1. GAUGE Fuse 2. POWER Fuse 3. Power Main Relay 4. Wire Harness	- - BE-60 -
Power window does not operate (ALL). (Power Door Lock is normal)	1. Ignition Switch 2. Power Window Master Switch 3. Wire Harness	BE-15 BE-60 -
Only one window glass does not move.	1. Power Window Master Switch 2. Power Window Switch 3. Power Window Motor 4. Wire Harness	BE-60 BE-60 BE-60 -
”Window Lock System” does not operate.	1. Power Window Master Switch	BE-60

POWER DOOR LOCK CONTROL SYSTEM:

Symptom	Suspect Area	See page
”Door lock system” does not operate at all.	1. D/L Fuse 2. GAUGE Fuse 3. Door Lock Control Relay 4. Wire Harness	- - BE-68 -
Door lock system does not operate by manual switch.	1. Door Lock Control Relay 2. Door Lock Control Switch 3. Wire Harness	BE-68 BE-68 -
Door lock system does not operate by door key.	1. Door Key Lock and Unlock Switch 2. Wire Harness 3. Door Lock Link Disconnected	BE-68 - -
Fault in 2 - Operation unlock function of Driver’s side door key lock and unlock switch.	1. Door Key Lock and Unlock Switch 2. Door Lock Control Relay 3. Wire Harness	BE-68 BE-68 -
Fault in key confine prevention operate.	1. Door Lock Control Relay 2. Door Control Switch 3. Door Courtesy Switch 4. Wire Harness	BE-68 BE-68 BE-32 -
Only one door lock does not operate.	1. Door Lock Motor 2. Wire Harness	BE-68 -

WIRELESS DOOR LOCK CONTROL SYSTEM:

HINT:

- Troubleshooting of the wireless door lock control system is based on the premise that the door lock control system is operating normally. Accordingly, before troubleshooting the wireless door lock control system, first make certain that the door lock control system is operating normally.
- If the trouble still reappears even though there are no abnormalities in any of the other circuits, then check and replace the Wireless Door Lock Control Receiver as the last step.

Symptom	Suspect Area	See page
All functions of wireless door lock control system do not operate.	1. Transmitter 2. Wireless Door Lock Control Receiver 3. Wire Harness	BE-82 BE-82 -

BE1F6-01

INSPECTION

1. INSPECT TURN SIGNAL SWITCH CONTINUITY

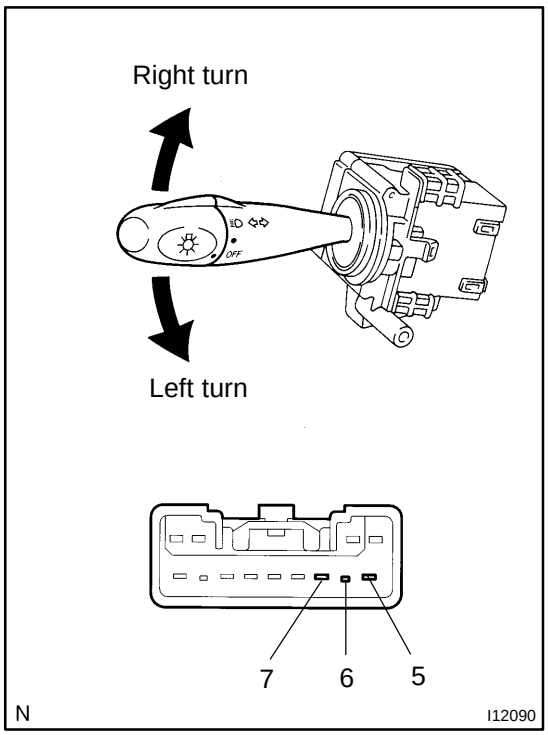

Switch position	Tester connection	Specified condition
Left turn	5 - 6	Continuity
Neutral	-	No continuity
Right turn	6 - 7	Continuity

If continuity is not as specified, replace the switch.

2. INSPECT HAZARD WARNING SWITCH CONTINUITY

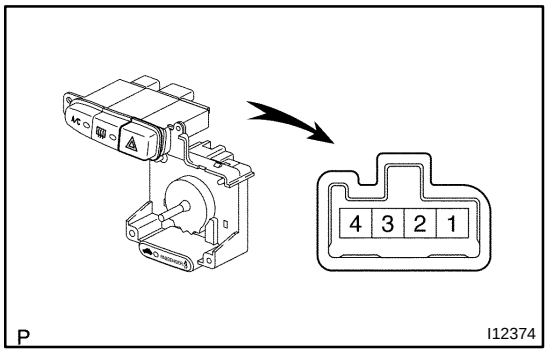

Switch position	Tester connection	Specified condition
Switch OFF	-	No continuity
Switch ON	1 - 2	Continuity

If continuity is not as specified, replace the switch.

Wire harness side:

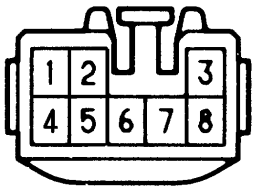

I04046

3. INSPECT TURN SIGNAL FLASHER CIRCUIT

Disconnect the connector from the combination switch and inspect the connector on the wire harness side, as shown.

Tester connection	Condition	Specified condition
2 - Ground	Constant	Continuity
3 - Ground	Constant	Continuity
5 - Ground	Turn signal switch RIGHT or OFF	No continuity
5 - Ground	Turn signal switch LEFT	Continuity
6 - Ground	Turn signal switch LEFT or OFF	No continuity
6 - Ground	Turn signal switch RIGHT	Continuity
7 - Ground	Constant	Continuity
8 - Ground	Hazard warning switch OFF	No continuity
8 - Ground	Hazard warning switch ON	Continuity
1 - Ground	Ignition switch LOCK or ACC	No voltage
1 - Ground	Ignition switch ON	Battery positive voltage
4 - Ground	Constant	Battery positive voltage

If circuit is as specified, replace the relay.
If circuit is not as specified, inspect the circuits connected to other parts.

TURN SIGNAL AND HAZARD WARNING SYSTEM

BE18H-03

LOCATION

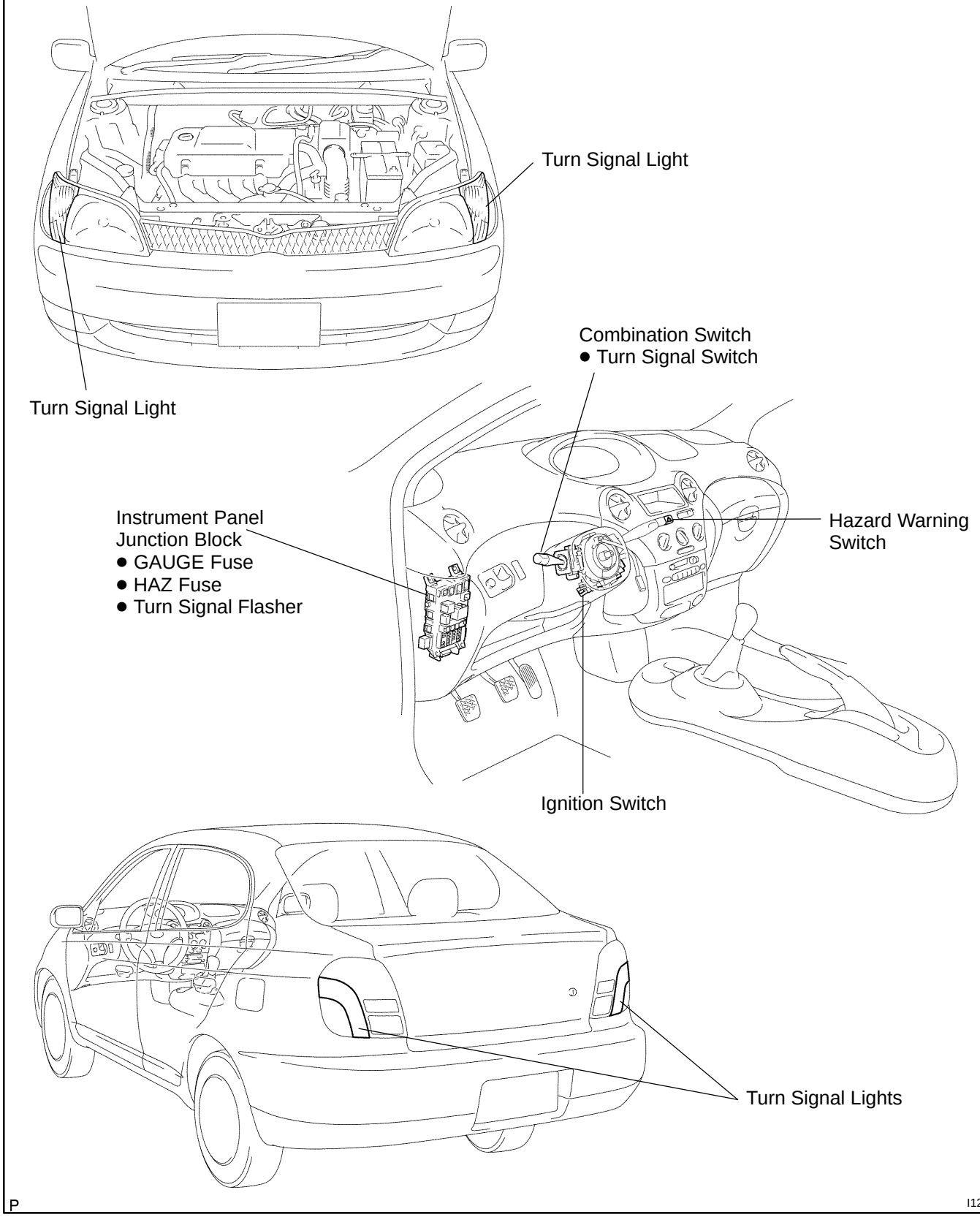

BE1F8-01

INSPECTION

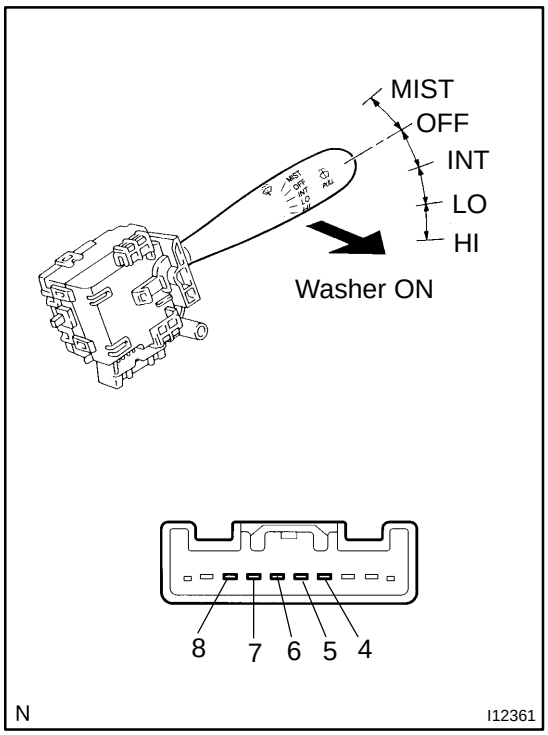

1. INSPECT WIPER AND WASHER SWITCH CONTINUITY

Switch position	Tester connection	Specified condition
MIST	7 - 8	Continuity
OFF	6 - 7	Continuity
INT (w/ Intermittent wiper)	6 - 7	Continuity
LO	7 - 8	Continuity
HI	8 - 9	Continuity
Washer ON	4 - 5	Continuity

If continuity is not as specified, replace the switch.

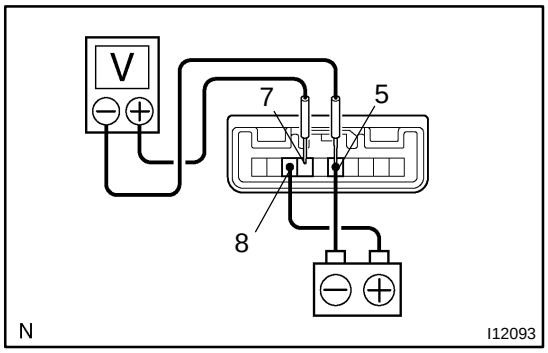

2. w/ Intermittent wiper:
INSPECT WIPER INTERMITTENT OPERATION

(a) Turn the wiper switch to INT position.
(b) Turn the intermittent time control switch to FAST position.
(c) Connect the positive (+) lead from the battery to terminal 8 and the negative (-) lead to terminal 5.
(d) Connect the positive (+) lead from the voltmeter to terminal 7 and the negative (-) lead to terminal 5, check that the meter needle indicates battery positive voltage.

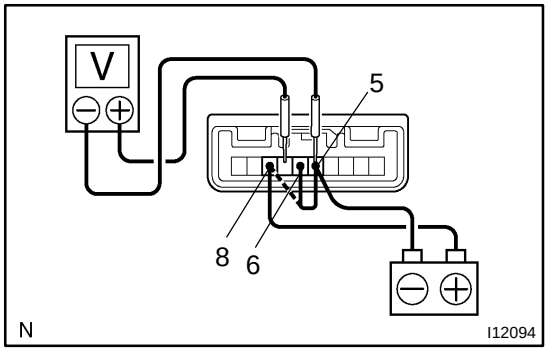

(e) After connecting terminal 6 to terminal 8, connect to terminal 8 to terminal 5, check the voltage rises from 0 volts to battery voltage with in the times, as shown in the table.

INT time control switch position	**Voltage**
FAST	Approx. 1 ~ 3 sec. ←Battery positive voltage ←0 Volt
SLOW	Approx. 10 ~ 15 secs. ←Battery positive voltage ←0 Volt

If operation is not as specified, replace the wiper and washer switch.

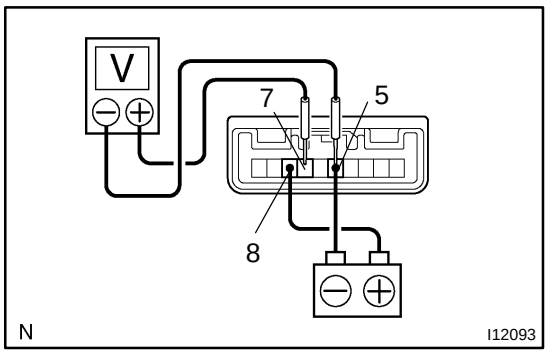

3. INSPECT WASHER LINKED OPERATION

(a) Connect the positive (+) lead from the battery to terminal 8 and the negative (-) lead to terminal 5.

(b) Connect the positive (+) lead from the voltmeter to terminal 7 and the negative (-) lead to terminal 5.

(c) Push in the washer switch, and check that the voltage changes, as shown in the table.

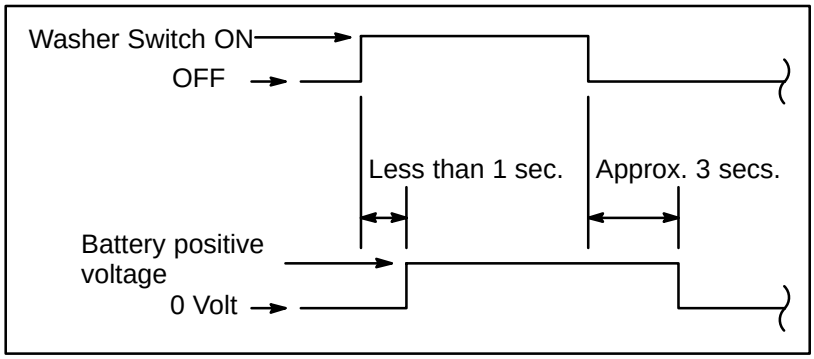

If operation is not as specified, replace the wiper and washer switch.

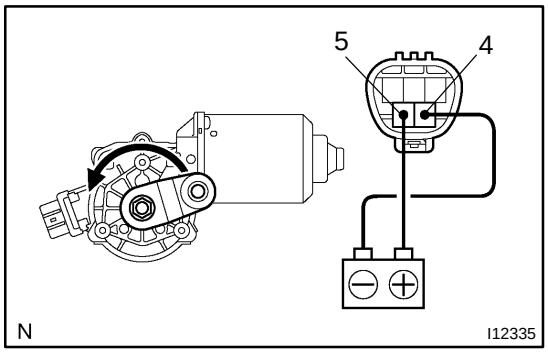

4. Low speed:
INSPECT WIPER MOTOR OPERATION

Connect the positive (+) lead from the battery to terminal 5 and the negative (-) lead to terminal 4, check that the motor operates at low speed.

If operation is not as specified, replace the motor.

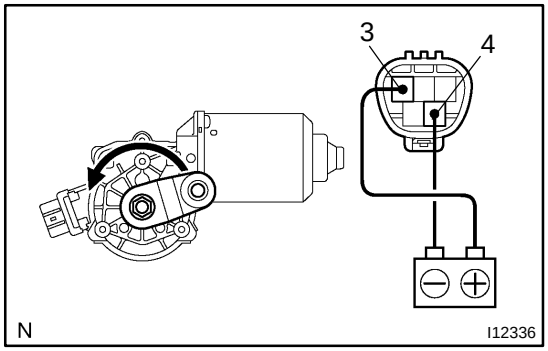

5. High speed:
INSPECT WIPER MOTOR OPERATION

Connect the positive (+) lead from the battery to terminal 3 and the negative (-) lead to terminal 4, check that the motor operates at high speed.

If operation is not as specified, replace the motor.

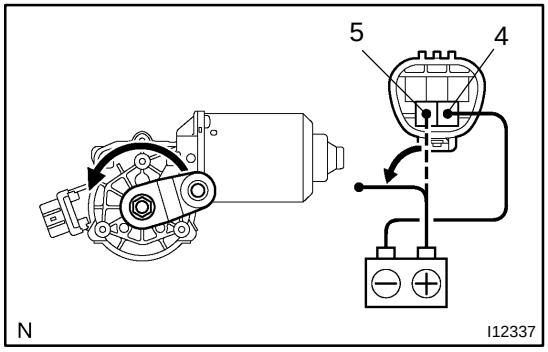

6. Stopping at stop position:
INSPECT WIPER MOTOR OPERATION

(a) Operate the motor at low speed and stop the motor operation anywhere except at the stop position by disconnecting positive (+) lead from terminal 5.

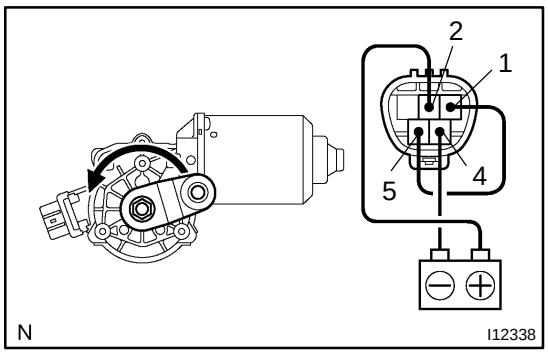

(b) Connect terminals 1 and 5.
(c) Connect the positive (+) lead from the battery to terminal 2 and negative (-) lead to terminal 4, check that the motor stops running at the stop position after the motor operates again.

If operation is not as specified, replace the motor.

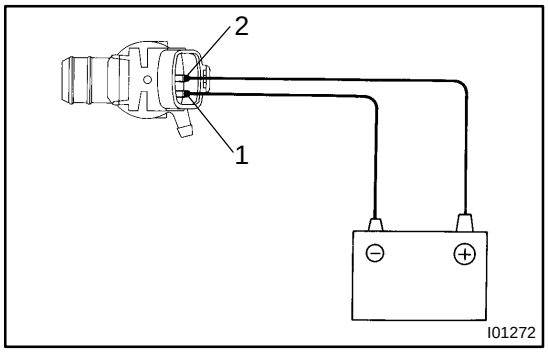

7. INSPECT WASHER MOTOR OPERATION

Connect the positive (+) lead from the battery to terminal 2 and the negative (-) lead to terminal 1, check that the motor operates.

NOTICE:

These tests must be performed quickly (within 20 seconds) to prevent the coil from burning out.

If operation is not as specified, replace the motor.

WIPER AND WASHER SYSTEM

BE18M-03

LOCATION

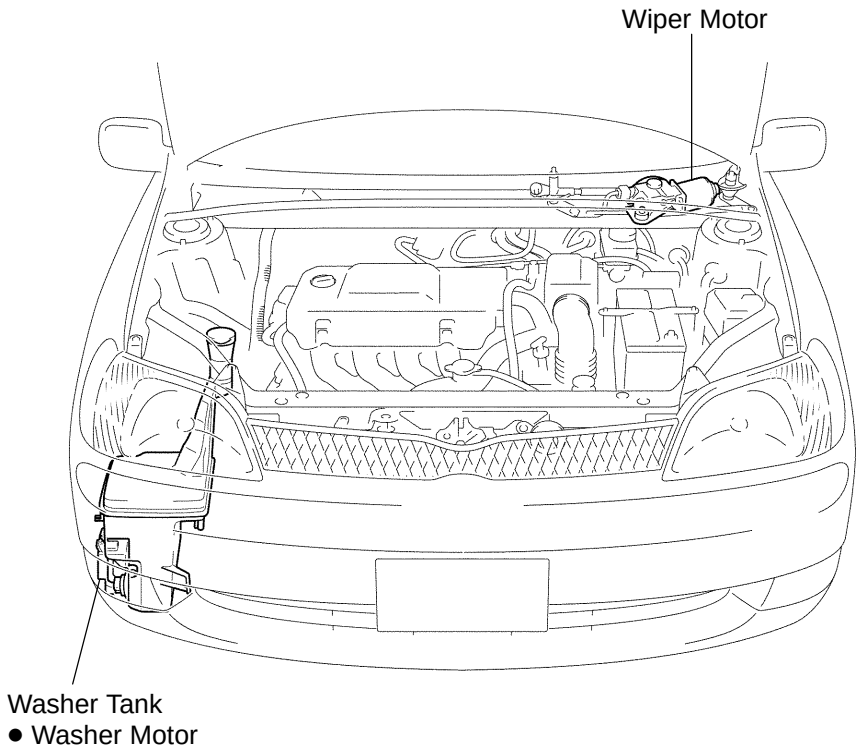

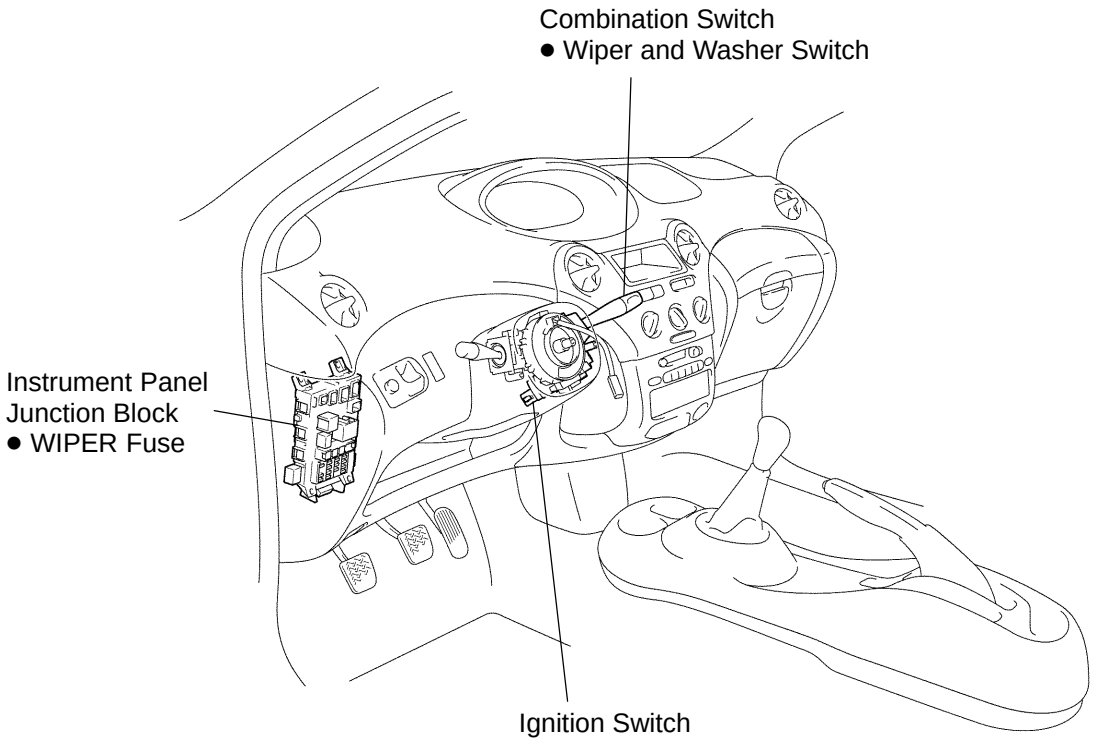

P

I12815

BE1FE-01

INSPECTION

1. INSPECT WIRELESS DOOR LOCK TRANSMITTER OPERATION

HINT:

Refer to "Wireless door lock control receiver and transmitter replacement" on page BE-86 .

(a) Using a screwdriver, remove the cover.

(b) Remove the battery (lithium battery).

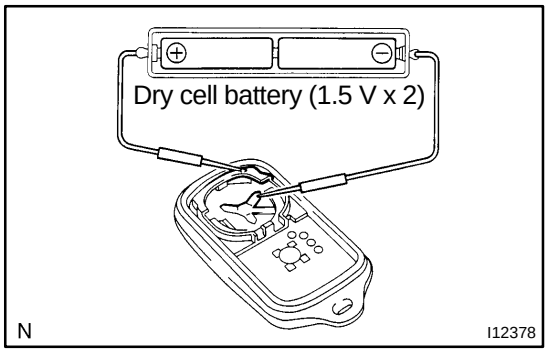

(c) Install a new or normal battery (lithium battery).

HINT:

When a new or normal battery can not be obtained, connect 2 new 1.5 V batteries in series, connect the battery (+) to the battery receptacle side terminal and battery (-) to the bottom terminal, then apply 3 V voltage to the transmitter.

(d) In the location where is approx. 1 M away from driver's outside handle in the right direction, and check the transmitter operation when pressing transmission switch on the surface of the transmitter body.

Standard:

Remote control of vehicle door lock can be operated.

HINT:

- The minimum operation distance differs according to operator, the way of holding, and location.
- As weak wave is used, operation distance might be shortened when noise is detected in strong wave or used frequency.

(e) Install the battery (lithium battery).

(f) Install a cover, so that rubber cover is not distorted or slipped off.

2. CHECK BATTERY CAPACITY

HINT:

- Make sure to use the TOYOTA electrical tester.
- With the battery unloaded, judge can not be made whether the battery is available or not on the test.
- When the transmitter is faulty, the energy amount left in the battery might not be checked correctly.
- On the lithium battery used for the transmitter, the voltage more than 2.5 V with the battery unloaded is shown on the tester until the energy is completely consumed.
  Accordingly when inspecting the energy amount left in the battery, it is necessary to measure the voltage when the battery is loaded. (1.2 kΩ).

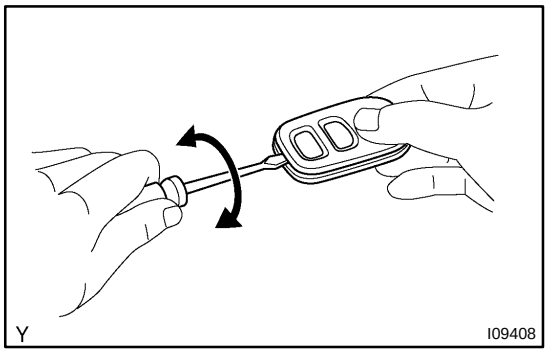

(a) Using a screwdriver, remove the cover.

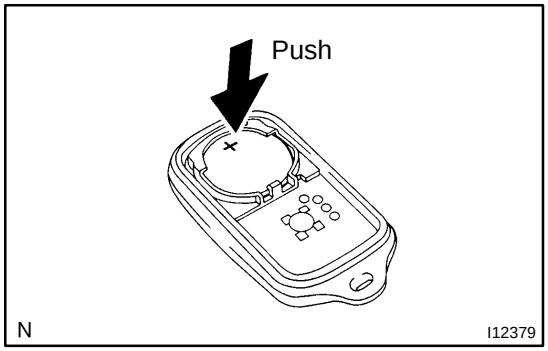

(b) Remove the battery (lithium battery) from the transmitter.

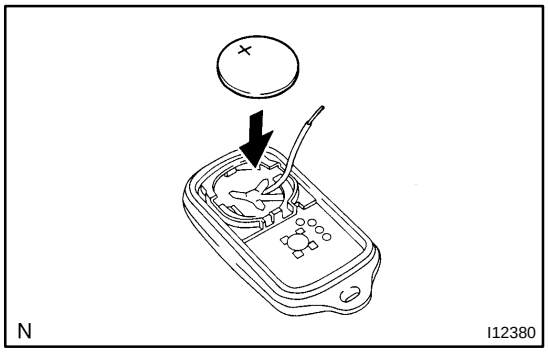

(c) Connect the lead to the (-) terminal of the transmitter and install the battery.

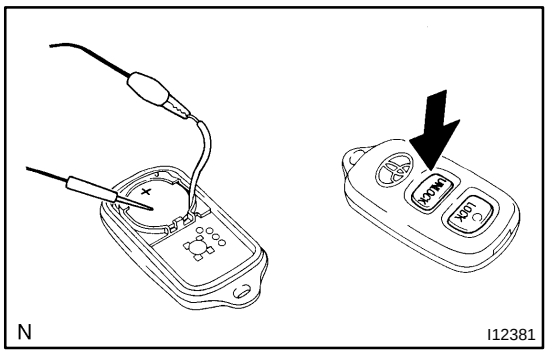

(d) Connect the (+) tester to the (+) battery (lithium battery), and (-) tester to the lead respectively.
(e) Press one of the transmitting switches on the transmitter for approx. 1 second.
(f) Press the transmitting switch on the transmitter again to check the voltage.
Standard: 2.1 V or more

HINT:

- When the temperature of the battery is low, the judge can not be made correctly.
  When the outcome of the test is less than 2.1 V, conduct the test again after leaving the battery in the place at 18 ˚C for more than 30 minutes.
- By auto power off function, the voltage becomes no load voltage (more than 2.5 V) condition after 20 seconds from the switch was pressed.
  Make sure to read the voltage before of it.
- High voltage might be shown 1 to 2 times after leaving the battery, judge should be made with the voltage shown at the 3rd time or later.

(g) Disconnect the lead.
(h) Set the battery (lithium battery) in the transmitter.
(i) Install the cover, so that the rubber cover is not distorted or slipped off.

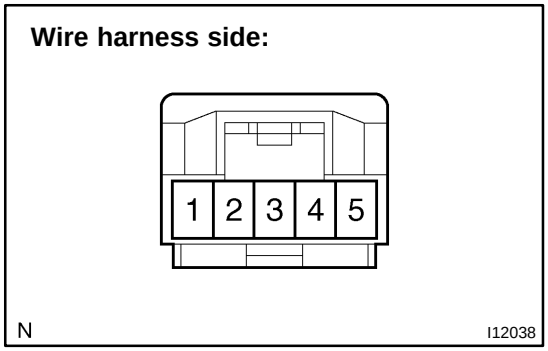

3. INSPECT WIRELESS DOOR LOCK CONTROL RECEIVER CIRCUIT

(a) Disconnect the connector from the receiver and inspect the connector on the wire harness side, as shown below.

Tester connection	Condition	Specified condition
1 - Ground	Constant	Continuity
5 - Ground	Constant	Battery positive voltage

If the circuit is not as specified, inspect the circuit connected to other parts.

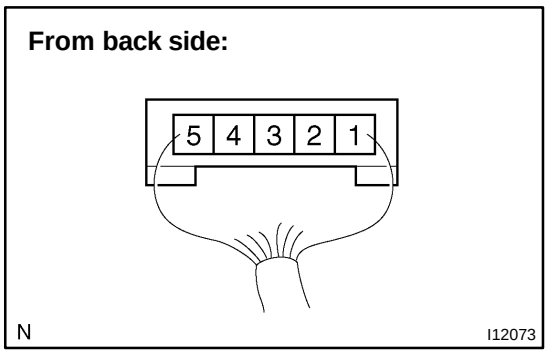

(b) Connect the wire harness side connector to the receiver and inspect the wire harness side connector from the back side, as shown below.

Tester connection	Condition	Specified condition
3 - Ground	Normal mode	10 - 14 V
2 - Ground	Ignition switch position OFF Key removed Transmitter ON	About 6 - 7 V

If circuit is as specified, replace the receiver.
If the circuit is not as specified, inspect the circuit connected to other parts.

WIRELESS DOOR LOCK CONTROL SYSTEM

BE18X-02

LOCATION

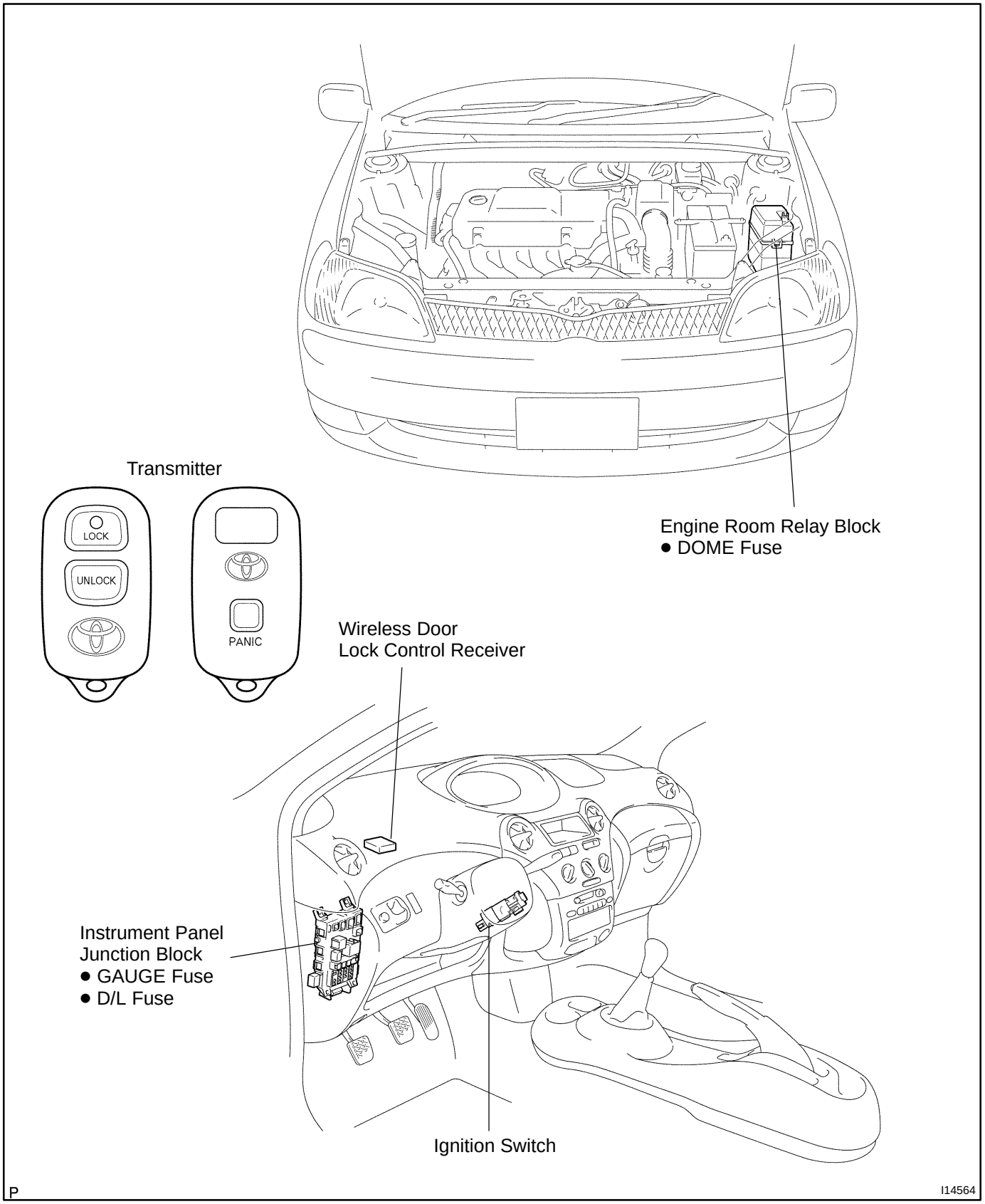

2 door models:

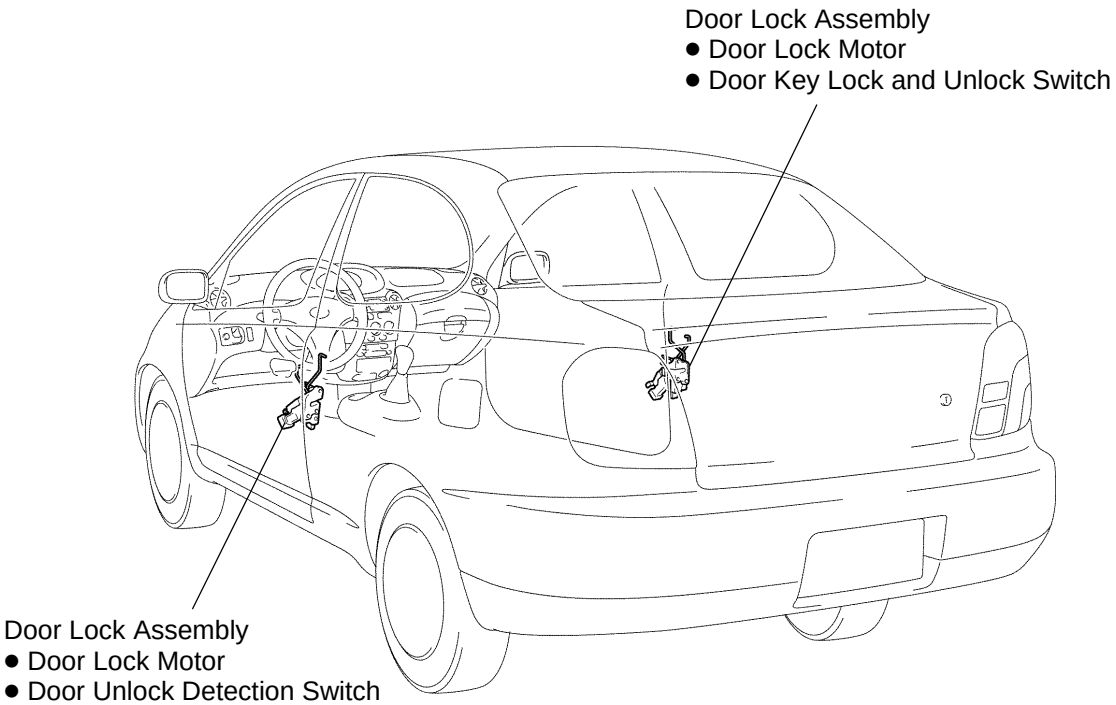

4 door models:

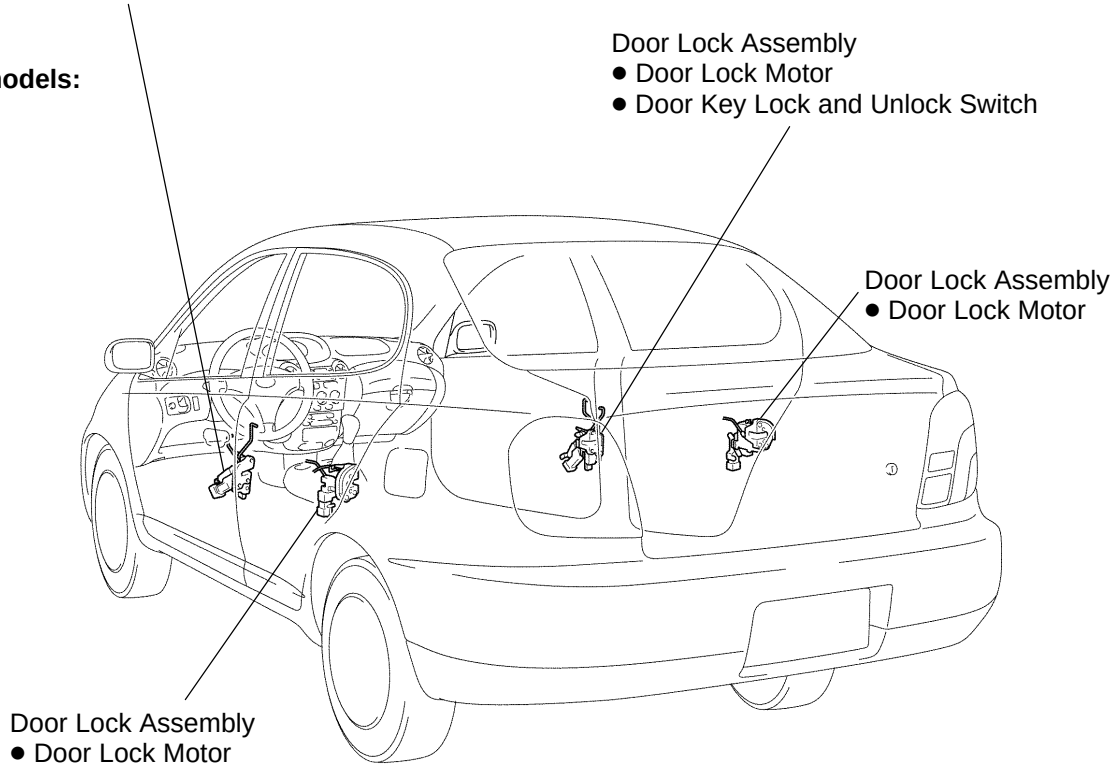

P

I14563

BE0IM-17

PRE-CHECK

Only wireless function (Remote control) will not operate.
(If a new transmitter or a transmitter of the same type that works properly with the vehicle is not available.)

Make the vehicle in the initialized condition:
The initialized condition is the condition when the following conditions are satisfied.
(1) Key plate has not been inserted in the ignition key cylinder.
(2) All the doors are closed. (Door warning light is off.)
(3) All the doors are locked.

Basic function check:

Under the standard operation, when repeating the operation of UNLOCK and LOCK switch 3 times or more alternately, check the UNLOCK-LOCK operation from 3rd time onward.
● Following procedures are standard operation.
(1) Keep about 1 M away to the right direction from the outside handle of a driver's seat.
(2) Face the transmitter toward the vehicle and press one of transmitter switches for about 1 sec.

No

Yes

Normal
<Reference>
● Operative distance may differ according to an operator, the way of holding the transmitter or position.
● Because weak electric wave is used, when there is strong wave or noise in the used frequency ,operation distance might be shortened.

Transmitter battery check:

Replace the transmitter battery with a new or normal one and check UNLOCK-LOCK function works under the standard operation.
<Reference>
● The battery should be replaced by only the shops with sufficient skill as new normal battery is necessary.
● Battery quality can be judged by checking the remnant volume of the battery.

Yes → Battery faulty.

No

Make the vehicle be in the initialized condition.

Inspection start by using self diagnostic mode:

Enter into the self diagnostic mode.
If operating door control receiver in the order of 1 through 2, the mode turns to diagnostic mode.
(1) Insert the key plate in the ignition key cylinder and pull out, then insert it again and turn ignition switch OFF → ON → OFF once within 5 seconds after pulling out.
(2) After completing the procedure within 30 seconds, turn the ignition switch OFF → ON → OFF 9 times.
HINT:
In the case that either of (1) and (2) conditions is not satisfied, transfer to normal mode.
<Reference>
When completing self diagnostic mode, turn the ignition switch ON.
LOCK and UNLOCK operation is not performed under the self diagnostic mode.

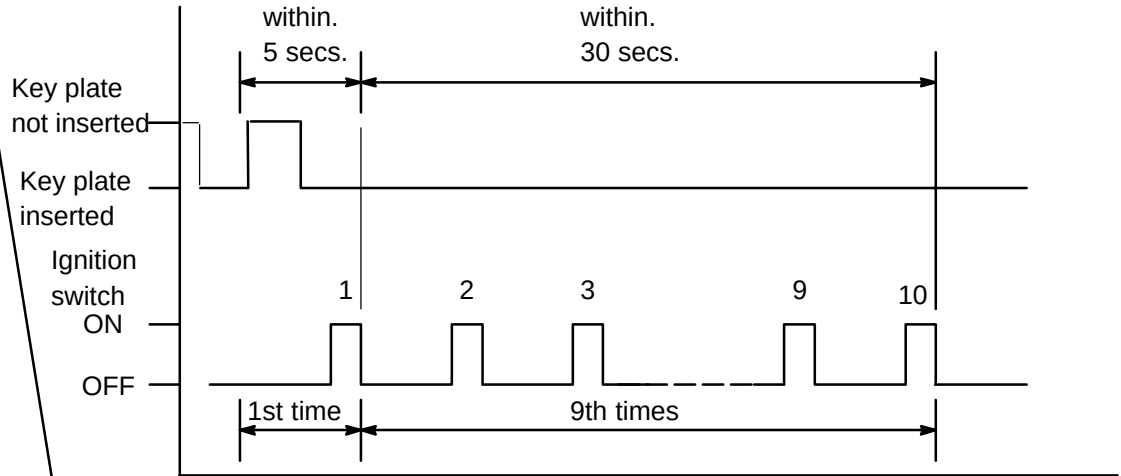

Self diagnostic mode operation check:

After the self diagnostic mode input operation has been performed, check that the taillight.

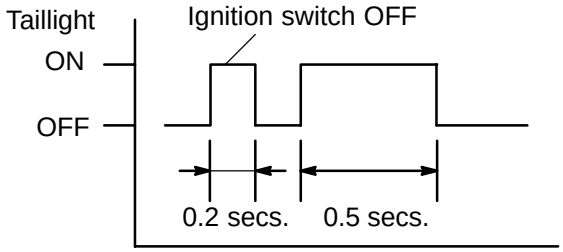

No
(Not entered in self diagnostic mode)

Is the method to enter into the diagnostic mode correct?

No

Yes

Is the chirping function of operation confirmation taillight normal?

No

Check control taillight.

Yes

Yes
(Entered in self diagnostic mode)

Key unlock warning switch inspection:

Check that continuity exists between connector terminal 21 of door lock control relay on the vehicle side and ground by inserting the key plate into the ignition key cylinder.

Check key unlock warning switch.

Self diagnostic mode check:

Check that how the taillight when pressing each transmitter switch.

(1) Receiver normal wave of LOCK switch.

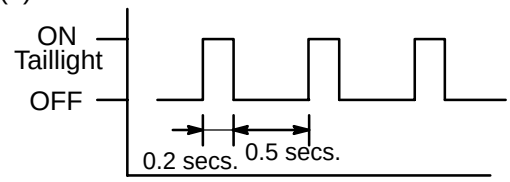

(2) Receiver normal wave of UNLOCK switch.

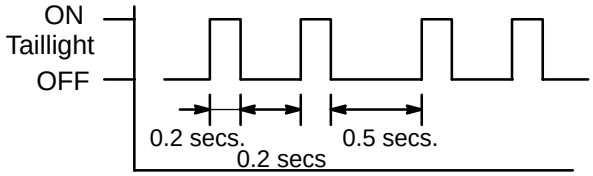

(3) Receiver normal wave of PANIC switch.

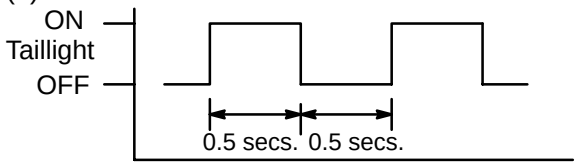

(4) Incompatibility of the recognition code or out from synchronization of rolling code.

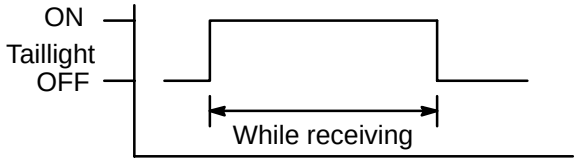

<Reference>:
While turning the ignition switch ON in the self diagnostic mode, the mode returns to normal mode.

(1), (2) or (3) are output.

(4) is output.
(All taillights response is same.)

Recognition code registration function check:

Check that it is possible to enter into rewrite mode or add mode.
(Refer to "Wireless door lock receiver and transmitter" - "Recognition code registration".)

Wireless door lock operates normally when recognition code is registered.

No response from taillight.

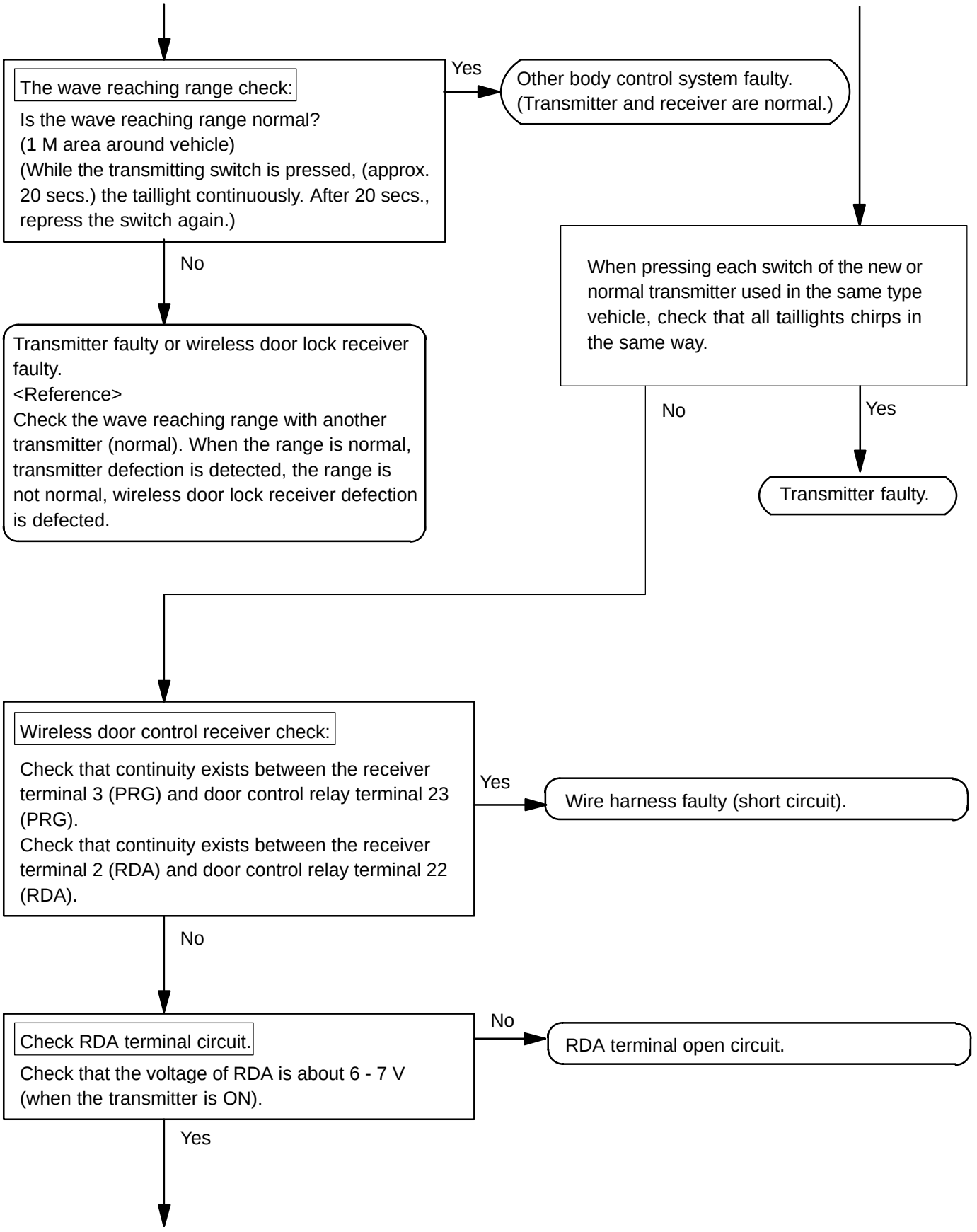
The wave reaching range check:
Is the wave reaching range normal?
(1 M area around vehicle)
(While the transmitting switch is pressed, (approx. 20 secs.) the taillight continuously. After 20 secs., repress the switch again.)
Yes
Other body control system faulty.
(Transmitter and receiver are normal.)
No
Transmitter faulty or wireless door lock receiver faulty.
<Reference>
Check the wave reaching range with another transmitter (normal). When the range is normal, transmitter defection is detected, the range is not normal, wireless door lock receiver defection is defected.
When pressing each switch of the new or normal transmitter used in the same type vehicle, check that all taillights chirps in the same way.
No
Yes
Transmitter faulty.
Wireless door control receiver check:
Check that continuity exists between the receiver terminal 3 (PRG) and door control relay terminal 23 (PRG).
Check that continuity exists between the receiver terminal 2 (RDA) and door control relay terminal 22 (RDA).
Yes
Wire harness faulty (short circuit).
No
Check RDA terminal circuit.
Check that the voltage of RDA is about 6 - 7 V (when the transmitter is ON).
No
RDA terminal open circuit.
Yes

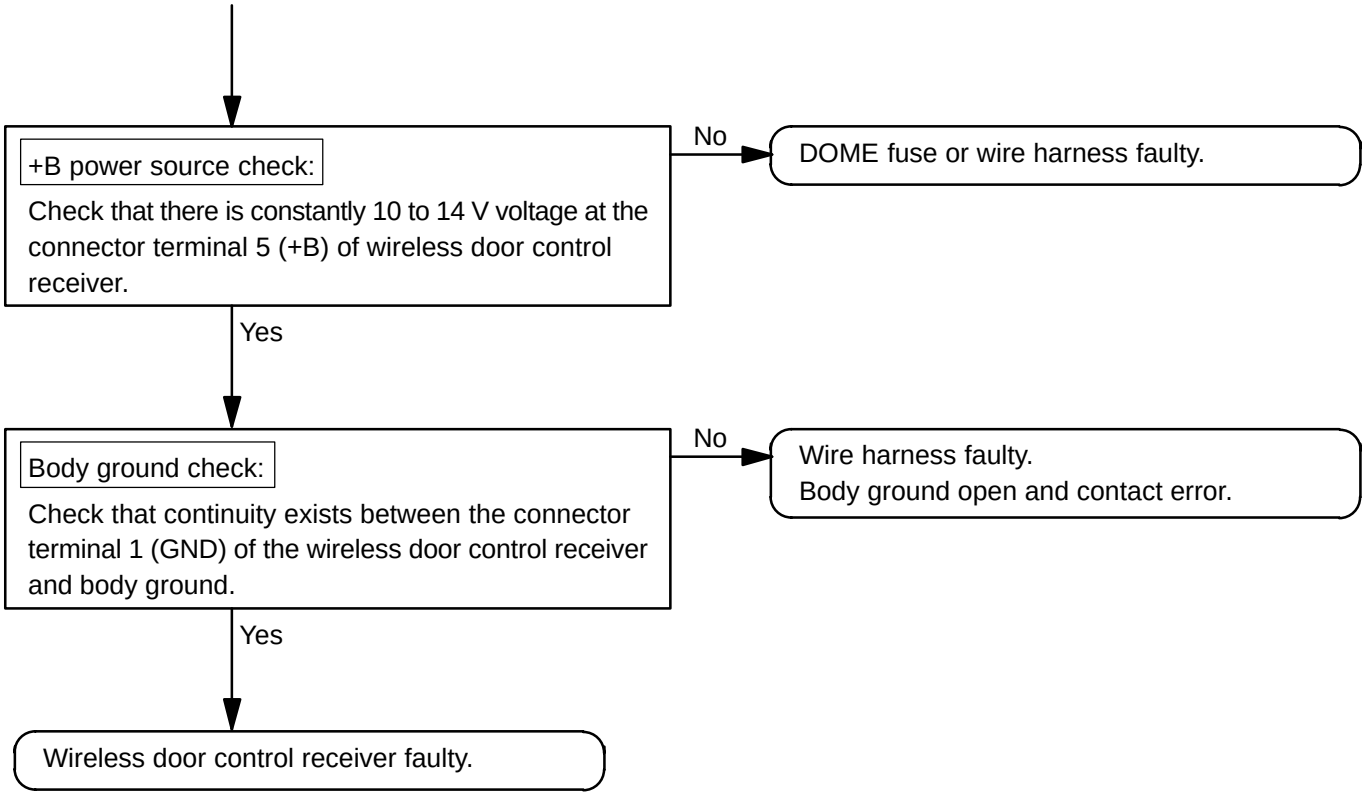
+B power source check:
Check that there is constantly 10 to 14 V voltage at the connector terminal 5 (+B) of wireless door control receiver.
No
DOME fuse or wire harness faulty.
Yes
Body ground check:
Check that continuity exists between the connector terminal 1 (GND) of the wireless door control receiver and body ground.
No
Wire harness faulty.
Body ground open and contact error.
Yes
Wireless door control receiver faulty.

BE1FF-01

REPLACEMENT

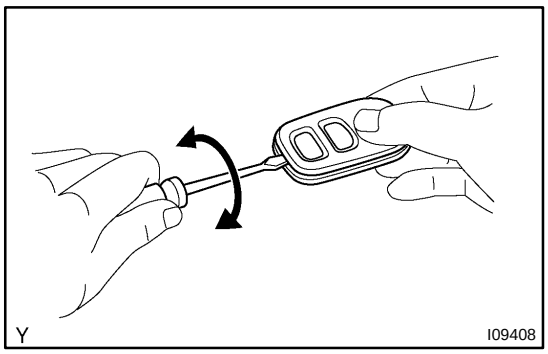

1. REPLACE TRANSMITTER (LITHIUM) BATTERY

NOTICE:

Special caution should be taken for handling each component as they are precision electronic components.

(a) Using a screwdriver, remove the cover.

NOTICE:

Do not pry out the cover forcibly.

HINT:

Push the cover with a finger as shown in the illustration, so that there becomes clearance, then pry out the cover from that clearance.

(b) Remove the transmitter.

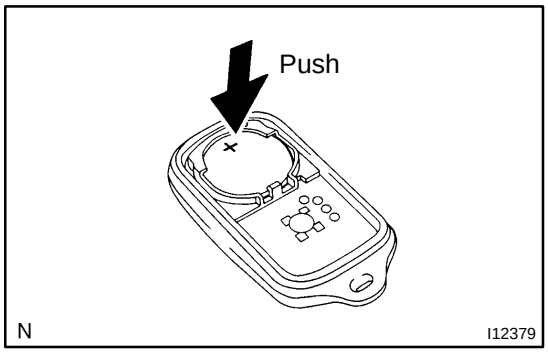

(c) Remove the battery (lithium battery) as shown in the illustration.

NOTICE:

- **Do not push the terminals with a finger.**
- **If prying up the battery (lithium battery) forcibly to remove, the terminals are deformed.**

(d) Install a battery (lithium battery).

NOTICE:

Face the battery upward. Take care not to deform the terminals.

(e) Check that the rubber cover is not distorted or slipped off, and install the cover.

NOTICE:

When the shrews are tightened loosely, it might cause faulty contact of battery (lithium battery) and terminals.

2. REPLACE DOOR CONTROL RECEIVER AND TRANSMITTER

NOTICE:

When replacing the door control receiver and transmitter, registration of recognition code is necessary because they are provided as single components.

(a) Select which operation mode should be performed from the following modes.
- Add mode
- Rewrite mode
- Prohibition mode
- Confirmation mode

HINT:
- The add mode is used to retain codes already registered while you register new recognition codes. This mode is used when adding a transmitter. However, if the number of registered codes exceeds 4 codes, previously registered codes are correspondingly erased in order, starting from the first registered code.
- The rewrite mode is used to erase all previously registered codes and register only new recognition codes.
- The prohibition mode is used to erase all registered codes and cancels the wireless door lock function. Use this mode when the transmitter is lost.
- The confirmation mode is for confirming how many recognition codes are already registered before you register additional recognition codes.

(b) Follow the chart on the following pages to register the transmitter recognition code at the wireless door lock control receiver.

HINT:
- When procedure is out of the specified, the operation returns to normal operation.
- Maximum 4 recognition codes can be registered.

Start registration of recognition code

The vehicle should be in the following conditions.
- The key is not inserted in the ignition key cylinder.
- Driver's door is OPEN. (Other doors are CLOSED)

Within 5 secs.

Insert the key into the ignition key cylinder, then pull it out.

Insert the key into the ignition key cylinder, then pull it out.

Within 40 secs.

Open and close the door (manual operation) 2 times.

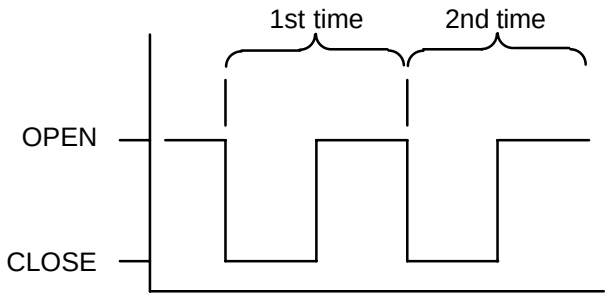

Insert the key into the ignition key cylinder, then pull it out.

Within 40 secs.

Open and close the door (manual operation) 2 times.

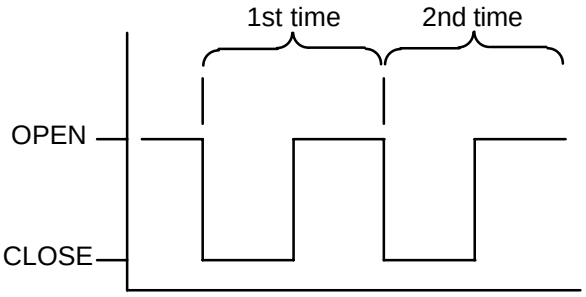

Close the all door and insert the key into the ignition key cylinder.

Turn the ignition switch from ON to LOCK at approx. 1 sec. interval 1 to 5 times to select the mode.

Add mode

ON - LOCK change occurs 1 time

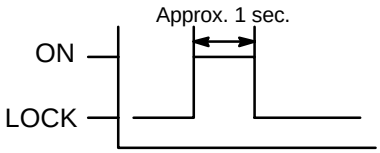

Confirmation mode

ON - LOCK change occurs 3 times

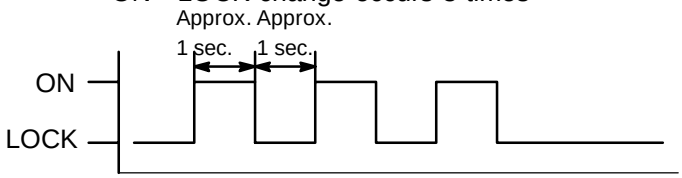

Rewrite mode

ON - LOCK change occurs 2 times

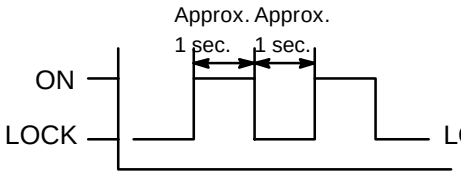

Prohibition mode

ON - LOCK change occurs 5 times

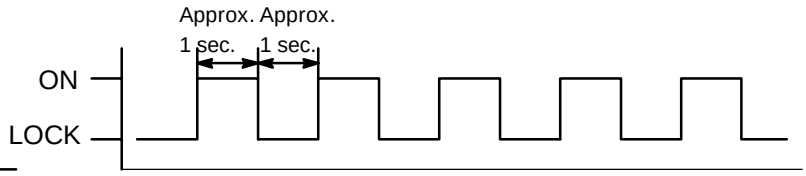

Pull out the key from the ignition key cylinder.

When add mode or rewrite mode is selected.

Door control relay automatically performs the LOCK-UNLOCK operation once or twice at 1 sec. interval to inform the operator that either the add mode or rewrite mode has been selected.

Within 3 secs.

LOCK-UNLOCK occurs once

Indicates that add mode has been selected.

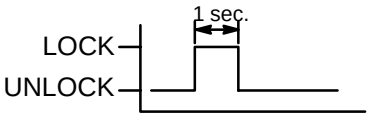

LOCK-UNLOCK occurs twice

Indicates that rewrite mode has been selected.

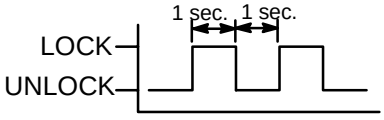

When prohibition mode is selected.

When confirmation mode is selected.

Door control relay automatically performs the LOCK-UNLOCK operation 1 to 4 times at 2 sec. interval to inform the operator of the number of the registered codes.
HINT:
When the number of the registered code is 0, the operation is automatically performed 5 times.

Example:
When the operation is performed twice, it directs that 2 types of recognition code have been registered.

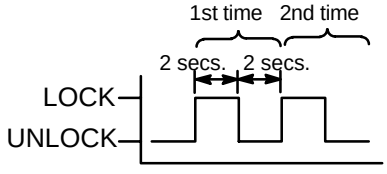

Registration of recognition code (Confirmation mode and prohibition mode) is completed.

When prohibition mode is selected.

Within 40 secs.

Door control relay performs LOCK-UNLOCK operation 5 times at a 1 sec. interval to inform the operator that prohibition mode has been selected.

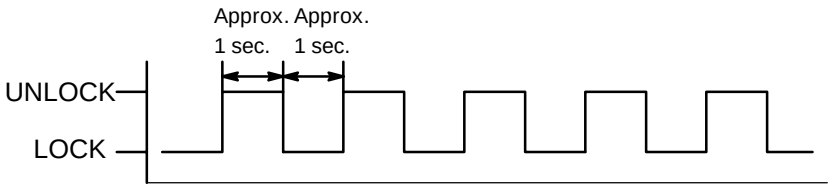

Press the lock and unlock switches on the transmitter switch simultaneously for more than between 1 sec. or more and 1.5 sec. below.

Within 3 secs.

Press either one of 2 switches on the transmitter.

Within 3 secs.

Door control relay automatically performs LOCK-UNLOCK operation once or twice at a 1 sec. interval to inform the operator that the receiver has received the signal from the transmitter.

LOCK-UNLOCK occurs once

Registration of recognition code is completed

LOCK-UNLOCK occurs twice

Registration of recognition code has not been completed.

- Recognition code received first time and second time did not match.
- When selecting add mode, a registered recognition code was received.

If LOCK-UNLOCK operation can not be performed at all, the mode returns to the normal mode, then start with ”Start registration of recognition code”.

Proceed to finish registration

Proceed to continue registration

Within 40 secs.

If even one of the following conditions is satisfied, registration of recognition codes is completed.

- 40 secs. elapses since the door control relay response.
- The driver’s door is opened.
- The key plate is inserted in the ignition key cylinder.
- 4 type recognition codes are registration at one time.

Registration of recognition codes (add mode or rewrite mode) is completed.

BODY OUTSIDE MOULDING

BO2U9-01

COMPONENTS

2-Door vehicle:

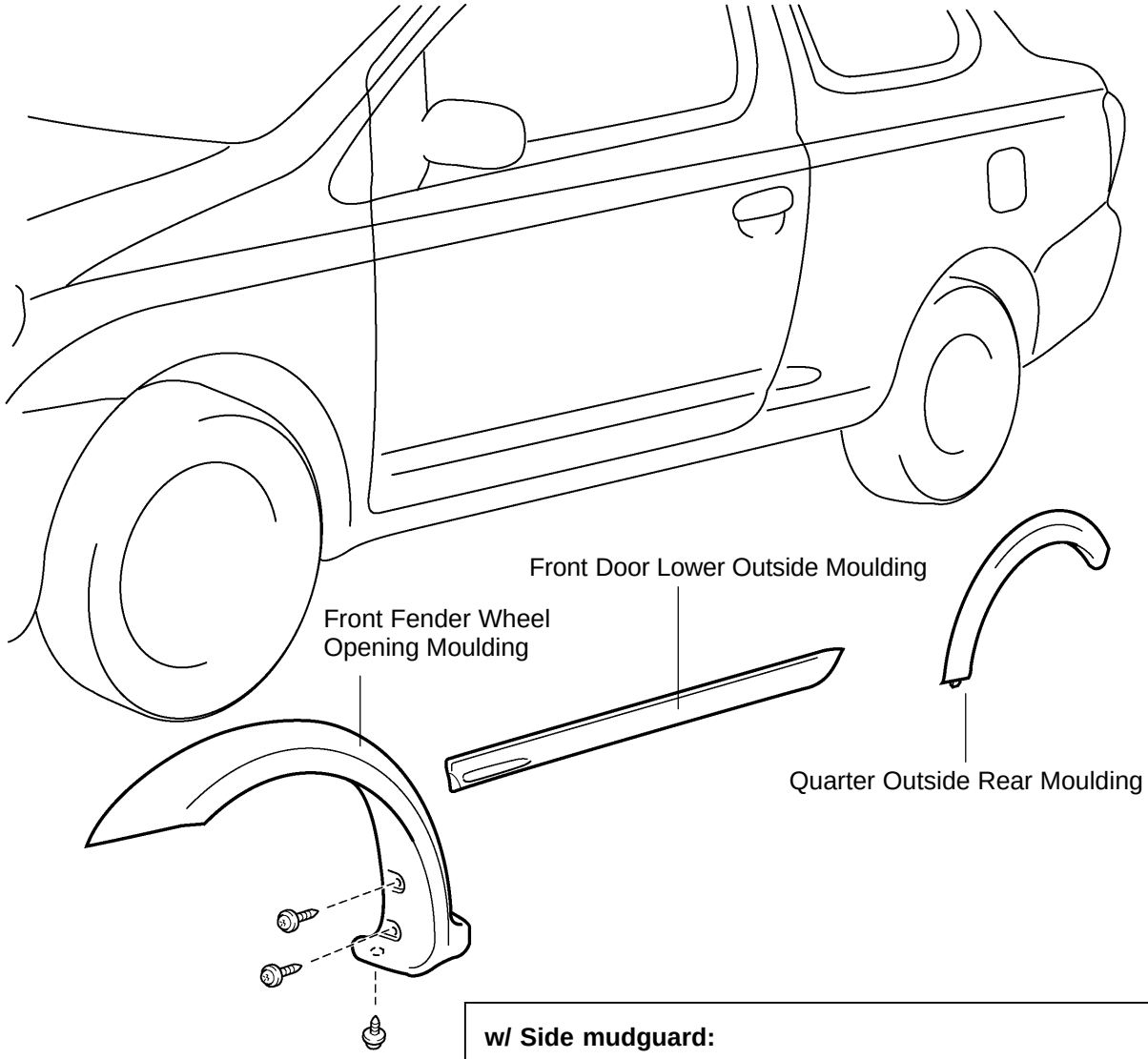

w/ Side mudguard:

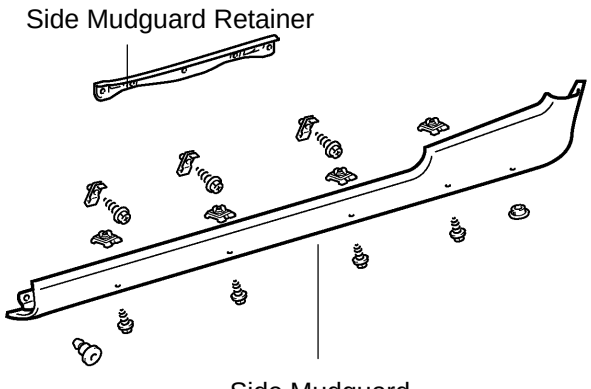

T

H12711

4-Door vehicle:

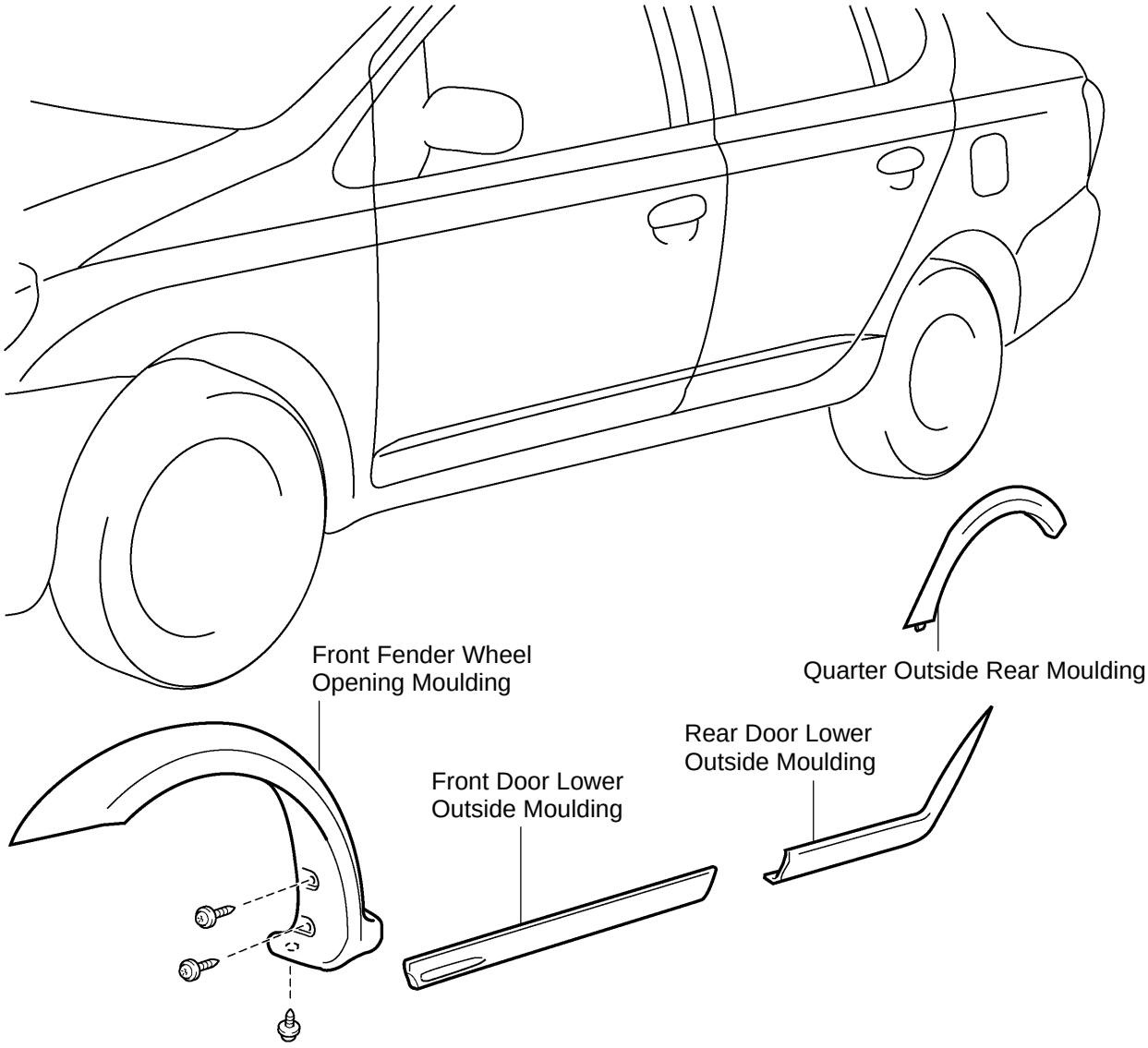

w/ Side mudguard:

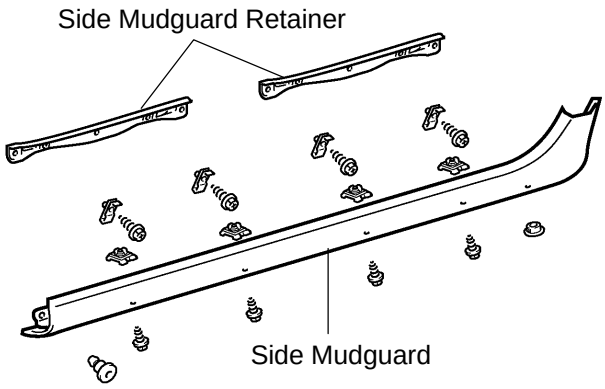

T

H12712

BO2UB-01

INSTALLATION

1. w/ Side mudguard:

INSTALL SIDE MUDGUARD

(a) 2-Door vehicle:

Clean the body mounting surface.

(1) Using a heat light, heat the body mounting surface to 40 - 60˚C (104 - 140˚F).

(2) Remove the adhesive tape from the body.

(3) Wipe off stains with cleaner.

(b) Install the 4 bolts and side mudguard No. 2 retainer.

(c) Install the side mudguard.

(1) 2-Door vehicle:

Using a heat light, heat the body and moulding.

Body: 40 - 60˚C (104 - 140˚F)

Moulding: 20 - 30˚C (68 - 86˚F)

NOTICE:

Do not heat the moulding excessively.

(2) 2-Door vehicle:

Lift the moulding release sheet from face of moulding.

NOTICE:

When the moulding release sheet is removed, make sure that no dirt or dust can get onto the uncoated area.

(3) Install the 3 bolts and screw.

(4) Align the bosses with their corresponding holes in the body and press firmly on the moulding.

NOTICE:

Do not apply excessive force onto the moulding, but steady pressure with your thumbs.

2. 4-Door vehicle:

INSTALL QUARTER OUTSIDE REAR MOULDING

(a) Clean the body mounting surface.

(1) Using a heat light, heat the body mounting surface to 40 - 60˚C (104 - 140˚F).

(2) Remove the adhesive tape from the body.

(3) Wipe off stains with cleaner.

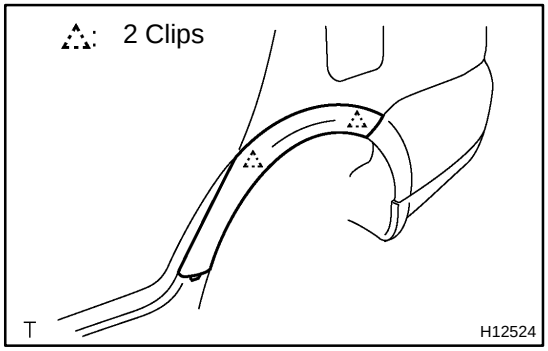

(b) Install the quarter outside rear moulding.

(1) Using a heat light, heat the body and moulding.

Body: 40 - 60˚C (104 - 140˚F)

Moulding: 20 - 30˚C (68 - 86˚F)

NOTICE:

Do not heat the moulding excessively.

(2) Lift the moulding release sheet from face of moulding.

NOTICE:
When the moulding release sheet is removed, make sure that no dirt or dust can get onto the uncoated area.

(3) Align the bosses with their corresponding holes in the body and press firmly on the moulding.

NOTICE:
Do not apply excessive force onto the moulding, but steady pressure with your thumbs.

3. 2-Door vehicle:
INSTALL QUARTER OUTSIDE REAR MOULDING

(a) Clean the body mounting surface.
(1) Using a heat light, heat the body mounting surface to 40 - 60˚C (104 - 140˚F).
(2) Remove the adhesive tape from the body.
(3) Wipe off stains with cleaner.

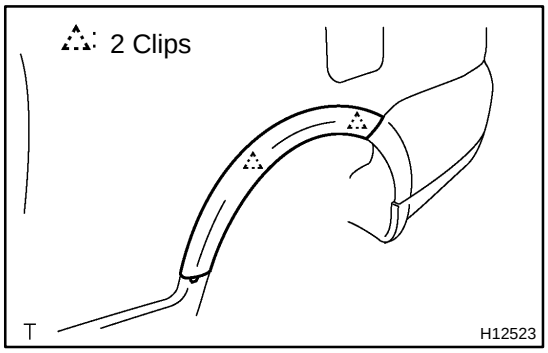

(b) Install the quarter outside rear moulding.
(1) Using a heat light, heat the body and moulding.
Body: 40 - 60˚C (104 - 140˚F)
Moulding: 20 - 30˚C (68 - 86˚F)

NOTICE:
Do not heat the moulding excessively.

(2) Lift the moulding release sheet from face of moulding.

NOTICE:
When the moulding release sheet is removed, make sure that no dirt or dust can get onto the uncoated area.

(3) Align the bosses with their corresponding holes in the body and press firmly on the moulding.

NOTICE:
Do not apply excessive force onto the moulding, but steady pressure with your thumbs.

4. 4-Door vehicle:
INSTALL REAR DOOR LOWER OUTSIDE MOULDING

(a) Clean the body mounting surface.
(1) Using a heat light, heat the body mounting surface to 40 - 60˚C (104 - 140˚F).
(2) Remove the adhesive tape from the body.
(3) Wipe off stains with cleaner.

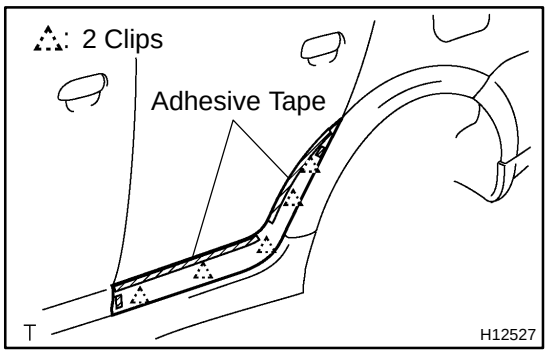

(b) Install the rear door lower outside moulding.
(1) Using a heat light, heat the body and moulding.
Body: 40 - 60˚C (104 - 140˚F)
Moulding: 20 - 30˚C (68 - 86˚F)

NOTICE:
Do not heat the moulding excessively.

(2) Lift the moulding release sheet from face of moulding.

NOTICE:
When the moulding release sheet is removed, make sure that no dirt or dust can get onto the uncoated area.

(3) Align the bosses with their corresponding holes in the body, and press firmly on the moulding.

NOTICE:
Do not apply excessive force onto the moulding, but steady pressure with your thumbs.

5. 4-Door vehicle:
INSTALL FRONT DOOR LOWER OUTSIDE MOULDING

(a) Clean the body mounting surface.
(1) Using a heat light, heat the body mounting surface to 40 - 60˚C (104 - 140˚F).
(2) Remove the adhesive tape from the body.
(3) Wipe off stains with cleaner.

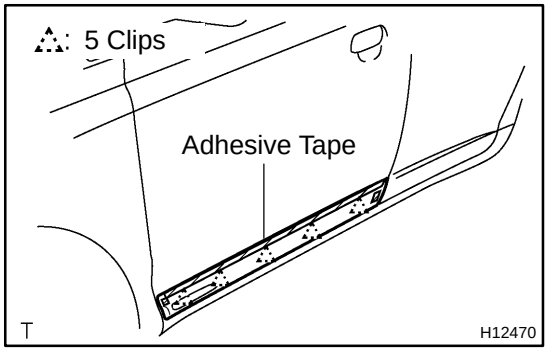

(b) Install the front door lower outside moulding.
(1) Using a heat light, heat the body and moulding.
Body: 40 - 60˚C (104 - 140˚F)
Moulding: 20 - 30˚C (68 - 86˚F)

NOTICE:
Do not heat the moulding excessively.

(2) Lift the moulding release sheet from face of moulding.

NOTICE:
When the moulding release sheet is removed, make sure that no dirt or dust can get onto the uncoated area.

(3) Align the bosses with their corresponding holes in the body, and press firmly on the moulding.

NOTICE:
Do not apply excessive force onto the moulding, but steady pressure with your thumbs.

6. 2-Door vehicle:
INSTALL FRONT DOOR LOWER OUTSIDE MOULDING

(a) Clean the body mounting surface.
(1) Using a heat light, heat the body mounting surface to 40 - 60˚C (104 - 140˚F).
(2) Remove the adhesive tape from the body.
(3) Wipe off stains with cleaner.

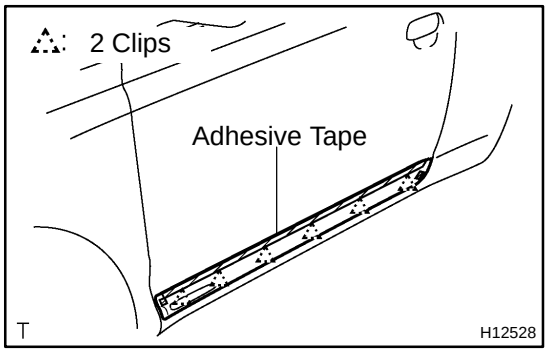

(b) Install the front door lower outside moulding.
(1) Using a heat light, heat the body and moulding.
Body: 40 - 60˚C (104 - 140˚F)
Moulding: 20 - 30˚C (68 - 86˚F)

NOTICE:
Do not heat the moulding excessively.

(2) Lift the moulding release sheet from face of moulding.

NOTICE:
When the moulding release sheet is removed, make sure that no dirt or dust can get onto the uncoated area.

(3) Align the bosses with their corresponding holes in the body, and press firmly on the moulding.

NOTICE:
Do not apply excessive force onto the moulding, but steady pressure with your thumbs.

7. INSTALL FRONT FENDER OUTSIDE MOULDING

(a) Clean the body mounting surface.
(1) Using a heat light, heat the body mounting surface to 40 - 60˚C (104 - 140˚F).
(2) Remove the adhesive tape from the body.
(3) Wipe off stains with cleaner.

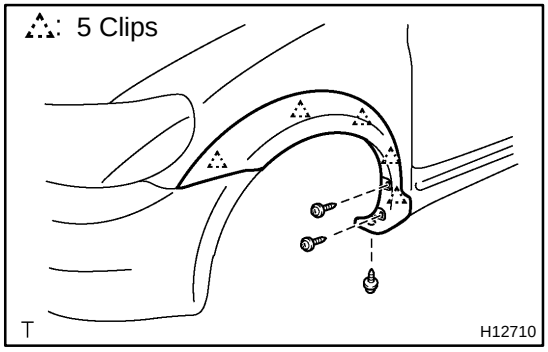

(b) Install the front fender moulding.
(1) Using a heat light, heat the body and moulding.
Body: 40 - 60˚C (104 - 140˚F)
Moulding: 20 - 30˚C (68 - 86˚F)

NOTICE:
Do not heat the moulding excessively.

(2) Lift the moulding release sheet from face of moulding.

NOTICE:
When the moulding release sheet is removed, make sure that no dirt or dust can get onto the uncoated area.

(3) Align the bosses with their corresponding holes in the body, and press firmly on the moulding.

NOTICE:
Do not apply excessive force onto the moulding, but steady pressure with your thumbs.

(4) Install the 3 screws.

(c) Install the fender liner.

8. w/ Front spoiler:
INSTALL FRONT SPOILER (See page BO-4)

BO2UA-01

REMOVAL

1. w/ Front spoiler:

REMOVE FRONT SPOILER (See page BO-4)

(a) Remove the fender liner.

(b) Remove the 3 nuts, screw and front bumper extension.

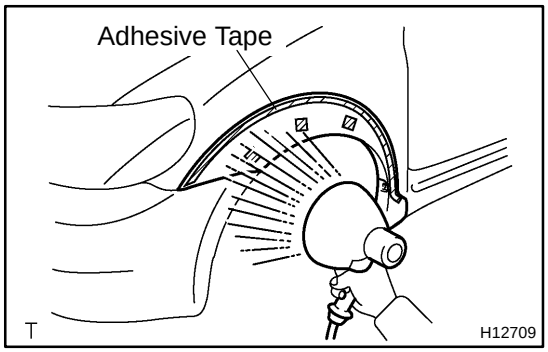

2. REMOVE FRONT FENDER WHEEL OPENING MOULDING

(a) Remove the fender liner.

(b) Remove the bolt and 3 screws.

(c) Using a heat light, heat the moulding to 20 - 30˚C (68 - 86˚F).

NOTICE:

Do not heat the moulding excessively.

(d) Cut the adhesive tape with a knife.

NOTICE:

Do not damage the body.

(e) Remove the moulding.

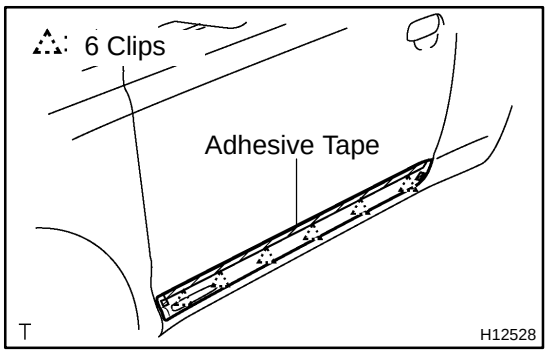

3. 2-Door vehicle:

REMOVE FRONT DOOR LOWER OUTSIDE MOULDING

(a) Using a heat light, heat the moulding to 20 - 30˚C (68 - 86˚F).

NOTICE:

Do not heat the moulding excessively.

(b) Cut the adhesive tape with a knife.

NOTICE:

- **If reusing the moulding, take care not to damage the moulding.**
- **Do not damage the body.**

(c) Remove the moulding.

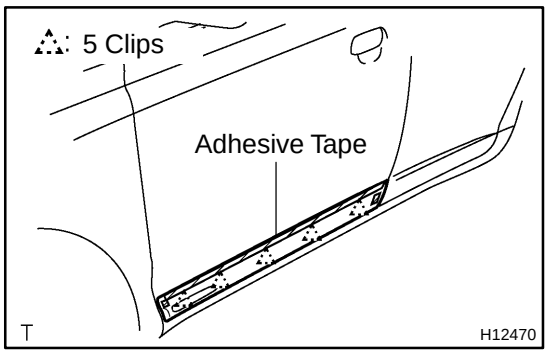

4. 4-Door vehicle:
REMOVE FRONT DOOR LOWER OUTSIDE MOULDING

(a) Using a heat light, heat the moulding to 20 - 30˚C (68 - 86˚F).

NOTICE:

Do not heat the moulding excessively.

(b) Cut the adhesive tape with a knife.

NOTICE:

- **If reusing the moulding, take care not to damage the moulding.**
- **Do not damage the body.**

(c) Remove the moulding.

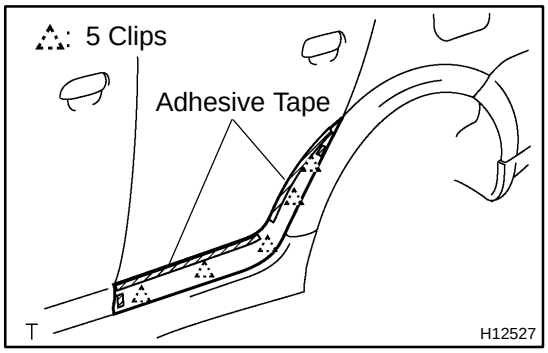

5. 4-Door vehicle:
REMOVE REAR DOOR LOWER OUTSIDE MOULDING

(a) Using a heat light, heat the moulding to 20 - 30˚C (68 - 86˚F).

NOTICE:

Do not heat the moulding excessively.

(b) Cut the adhesive tape with a knife.

NOTICE:

Do not damage the body.

(c) Remove the moulding.

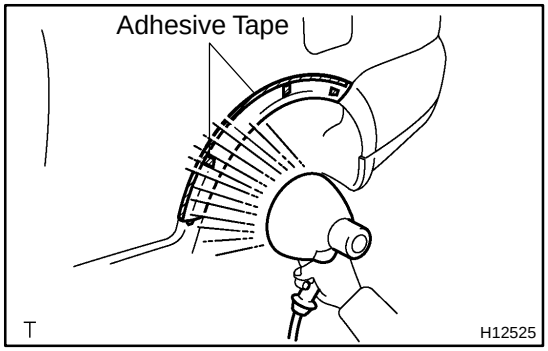

6. 2-Door vehicle:
REMOVE QUARTER OUTSIDE REAR MOULDING

(a) Using a heat light, heat the moulding to 20 - 30˚C (68 - 86˚F).

NOTICE:

Do not heat the moulding excessively.

(b) Cut the adhesive tape with a knife.

NOTICE:

Do not damage the body.

(c) Remove the moulding.

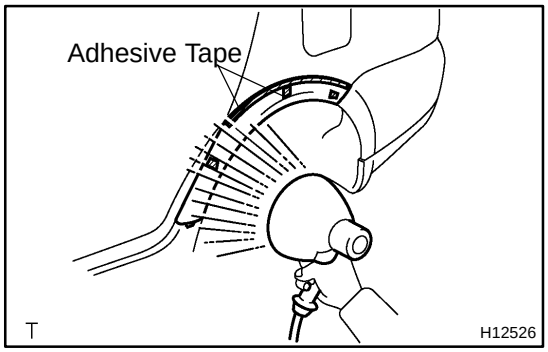

7. 4-Door vehicle:
REMOVE QUARTER OUTSIDE REAR MOULDING

(a) Using a heat light, heat the moulding to 20 - 30˚C (68 - 86˚F).

NOTICE:

Do not heat the moulding excessively.

(b) Cut the adhesive tape with a knife.

NOTICE:

Do not damage the body.

(c) Remove the moulding.

8. w/ Side mudguard:

REMOVE SIDE MUDGUARD

(a) Remove the 4 bolts and side mudguard No. 2 retainer.

(b) Remove the 3 bolts and screw.

(c) 2-Door vehicle:

Using a heat light, heat the moulding to 20 - 30˚C (68 - 86˚F).

NOTICE:

Do not heat the moulding excessively.

(d) 2-Door vehicle:

Cut the adhesive tape with a knife.

NOTICE:

Do not damage the body.

(e) Remove the moulding.

BACK WINDOW GLASS

BO22L-04

COMPONENTS

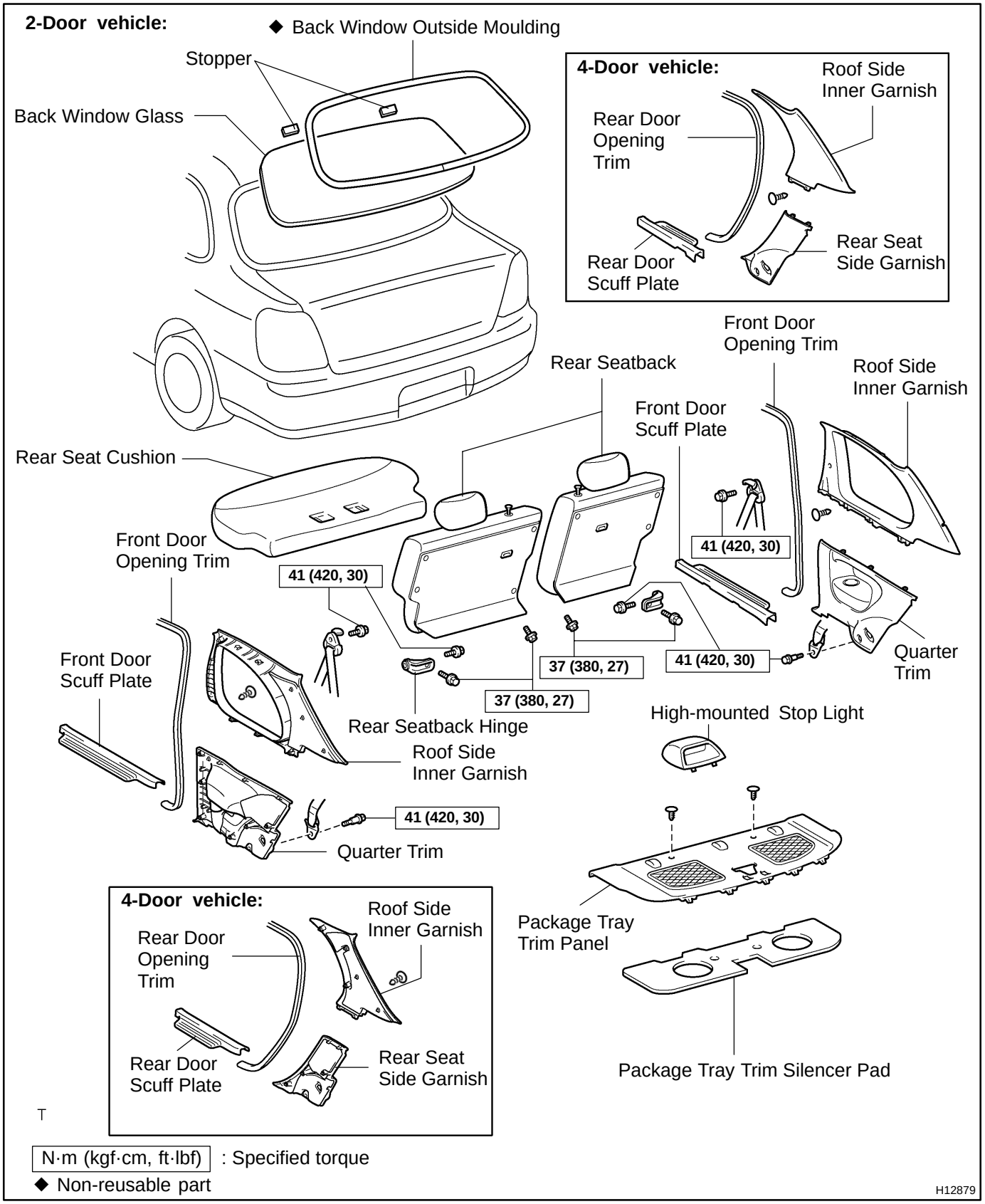

BO2UF-02

INSTALLATION

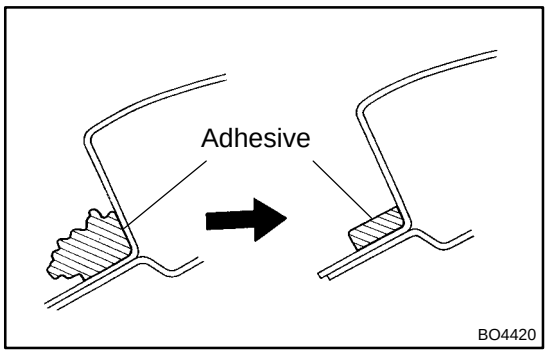

1. CLEAN AND SHAPE CONTACT SURFACE OF BODY

(a) Using a knife, cut away any rough areas on the body.

HINT:

Leave as much of the adhesive on the body as possible.

(b) Clean the cutting surface of the adhesive with a piece of shop rag saturated in cleaner.

HINT:

Even if all the adhesive has been removed, clean the body.

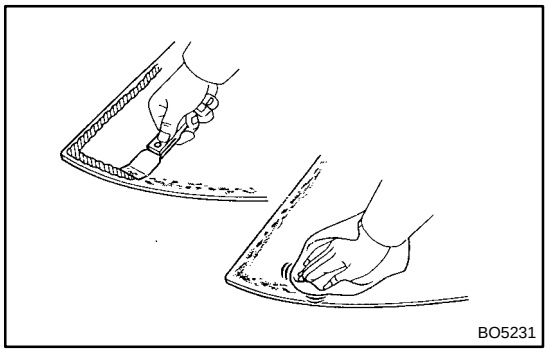

2. CLEAN REMOVED GLASS

(a) Remove the damaged stoppers.

(b) Using a scraper, remove the adhesive sticking to the glass.

(c) Clean the glass with cleaner.

NOTICE:

- **Be careful not to damage the glass.**
- **Do not touch the glass face after cleaning it.**

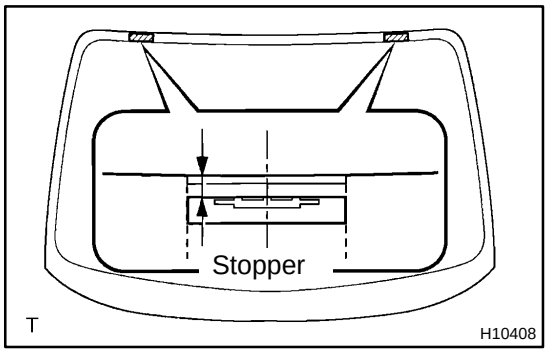

3. INSTALL NEW STOPPERS

Attach new stoppers to the glass with the ceramic notches on the glass aligned with the stoppers as shown in the illustration.

A: 15.9 mm (0.626 in.)

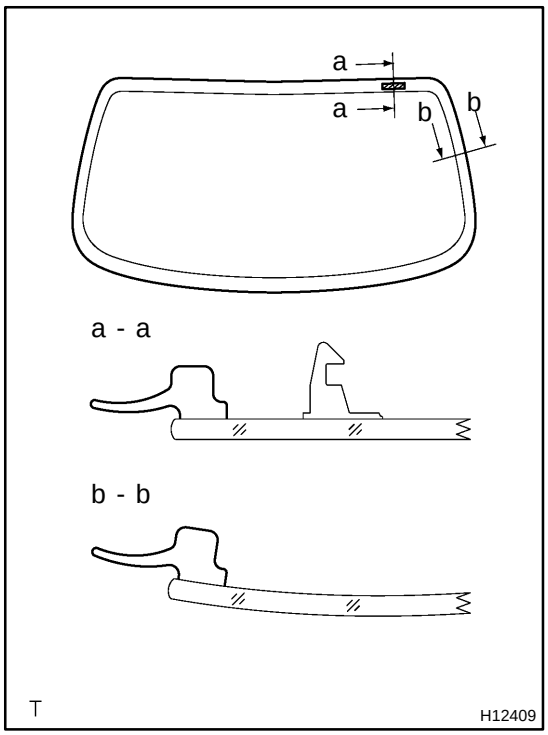

4. INSTALL NEW BACK WINDOW OUTSIDE MOULDING

Install new back window outside moulding to the back window glass as shown in the illustration.

HINT:

- Install the back window outside moulding from the center of the glass at the lower side of the vehicle.
- When installing the back window outside moulding, do not stretch it.

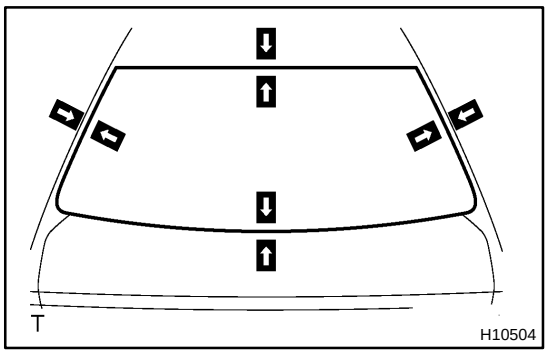

5. POSITION GLASS

(a) Place the glass in the correct position.
(b) Check that all contacting parts of the glass rim are perfectly even.
(c) Place reference marks between the glass and body.
(d) Remove the glass.

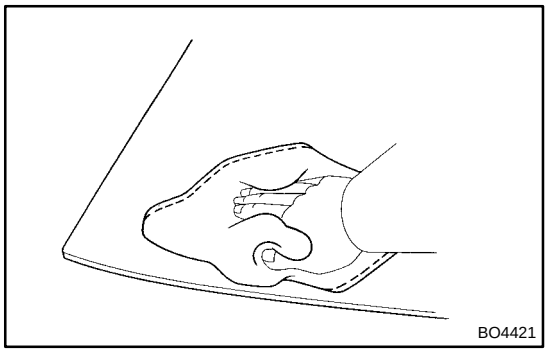

6. CLEAN CONTACT SURFACE OF GLASS

Using a cleaner, clean the contact surface which is black-colored area around the entire glass rim.

NOTICE:

Do not touch the glass face after cleaning it.

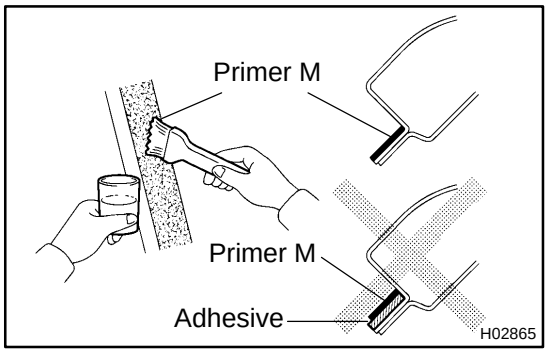

7. COAT CONTACT SURFACE OF BODY WITH PRIMER "M"

Using a brush, coat Primer M to the exposed part of body on the vehicle side.

NOTICE:

- **Let the primer coating dry for 3 minutes or more.**
- **Do not coat Primer M to the adhesive.**
- **Do not keep any of the opened Primer M for later use.**

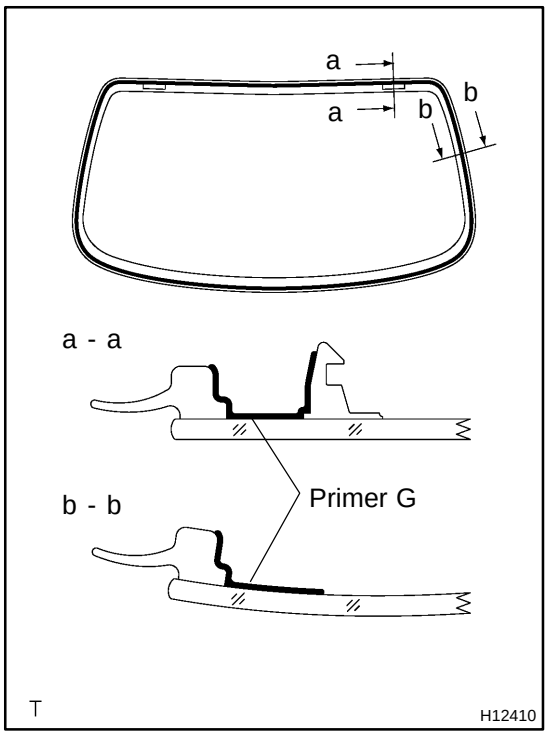

8. COAT CONTACT SURFACE OF GLASS WITH PRIMER "G"

(a) Using a brush or sponge, coat the edge of the glass and the contact surface with Primer G as shown in the illustration.
(b) When the primer is coated wrongly to the area other than the specified, wipe it off with a clean shop rag before the primer dries.

NOTICE:

- **Let the primer coating dry for 3 minutes or more.**
- **Do not keep any of the opened Primer G for later use.**

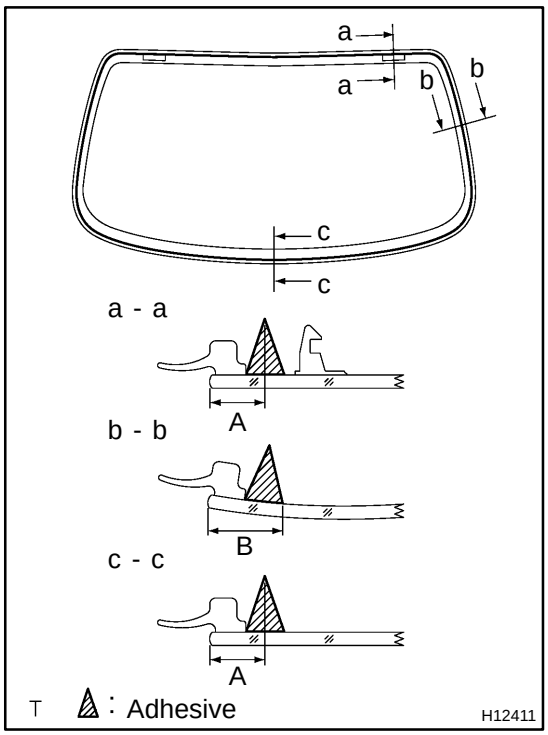

9. APPLY ADHESIVE

(a) Cut off the tip of the cartridge nozzle.

Part No. 08850-00801 or equivalent

HINT:

After cutting off the tip, use all adhesive within the time described in the table below.

Temperature	Tackfree time
35 ˚C (95 ˚F)	15 minutes
20 ˚C (68 ˚F)	100 minutes
5 ˚C (41 ˚F)	8 hours

(b) Load the cartridge into the sealer gun.

(c) Coat the glass with adhesive as shown in the illustration.

Adhesive hight: 12.5 mm (0.492 in.)
Adhesive width: 8.0 mm (0.315 in.)
A: 10.3 mm (0.406 in.)
B: 15.0 mm (0.591 in.)

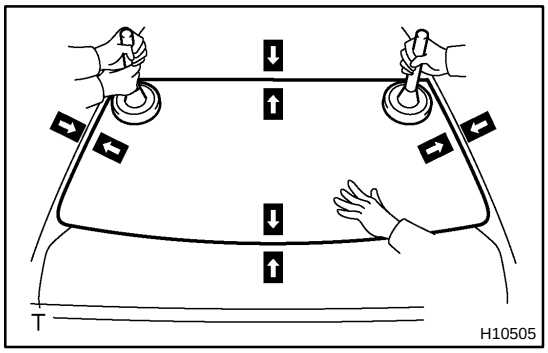

10. INSTALL GLASS

(a) Position the glass so that the reference marks are lined up, and press in gently along the rim.

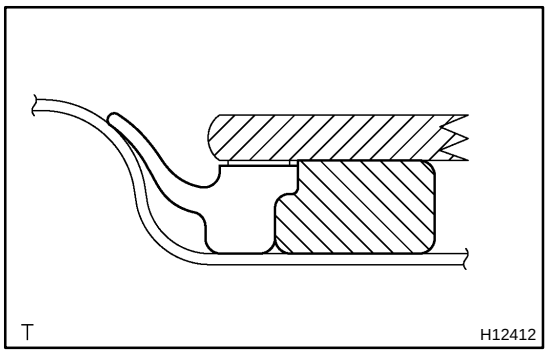

HINT:

Confirm that the moulding is attached to the body panel as shown in the illustration.

(b) Hold the back window glass in place securely with a protective tape or equivalent until the adhesive hardens.

NOTICE:

Take care not to drive the vehicle during the time described in the table below.

Temperature	Minimum time prior to driving the vehicle
35 ˚C (95 ˚F)	1.5 hours
20 ˚C (68 ˚F)	5 hours
5 ˚C (41 ˚F)	24 hours

11. INSPECT FOR LEAK AND REPAIR

NOTICE:

Conduct a leak test after the hardening time has elapsed.

Part No. 08833-00030 or equivalent

12. INSTALL PACKAGE TRAY SILENCER PAD

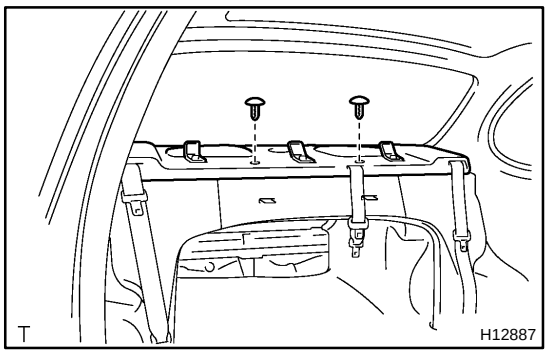

13. INSTALL PACKAGE TRAY TRIM PANEL

(a) Install the seat belts through the cutout of the package tray trim.

(b) Install the package tray trim with the 2 clips.

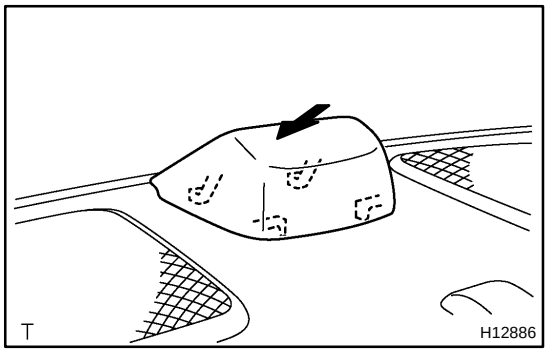

14. INSTALL HIGH-MOUNTED STOP LIGHT

(a) Connect the connector.

(b) Install the high-mounted stop light as shown in the illustration.

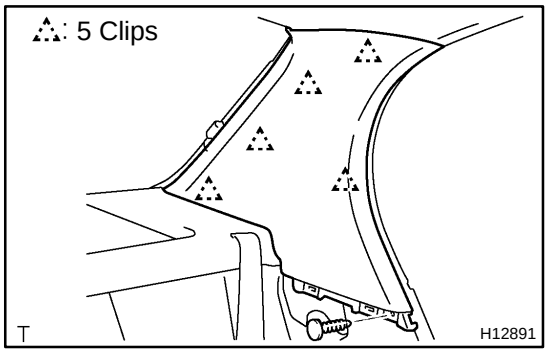

15. 4-Door vehicle:
INSTALL ROOF SIDE INNER GARNISH

(a) Install the roof side inner garnish to the body.

(b) Install the clip.

(c) Use the same manner described above to the other side.

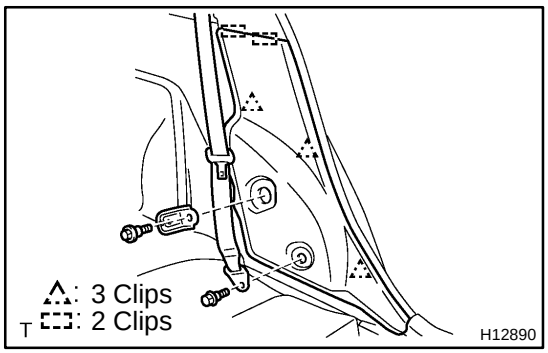

16. 4-Door vehicle:
INSTALL REAR SEAT SIDE GARNISH

(a) Install the rear seat side garnish to the body.

(b) w/ Split type rear seat:
Install the rear seatback hinge with the bolt.
Torque: 41 N·m (420 kgf·cm, 30 ft·lbf)

(c) Install the rear seat outer belt floor anchor with the bolt.
Torque: 41 N·m (420 kgf·cm, 30 ft·lbf)

(d) Use the same manner described above to the other side.

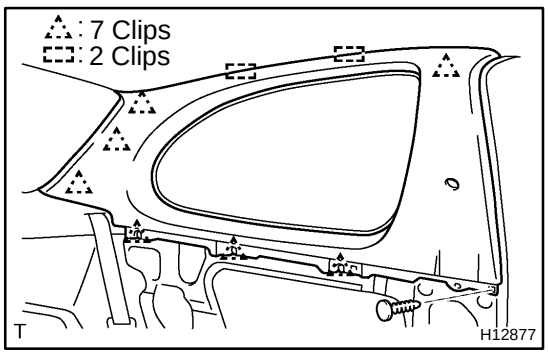

17. 2-Door vehicle:
INSTALL ROOF SIDE INNER GARNISH

(a) Install the roof side inner garnish to the body.

(b) Install the clip.

(c) Install the front seat outer belt shoulder anchor with the bolt.
Torque: 41 N·m (420 kgf·cm, 30 ft·lbf)

(d) Close the seat belt shoulder anchor cover cap.

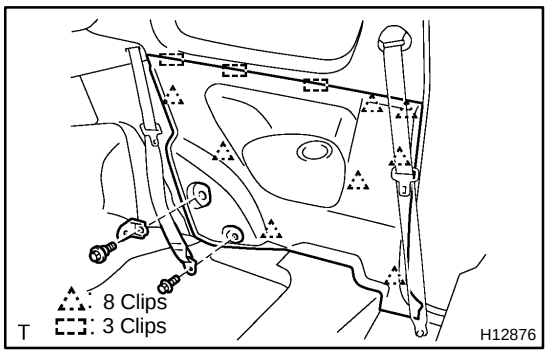

18. 2-Door vehicle:
INSTALL QUARTER TRIM

(a) Install the quarter trim to the body.

(b) w/ Split type rear seat:
Install the rear seatback hinge with the bolt.
Torque: 41 N·m (420 kgf·cm, 30 ft·lbf)

(c) Install the rear seat outer belt floor anchor with the bolt.
Torque: 41 N·m (420 kgf·cm, 30 ft·lbf)

19. INSTALL REAR SEATBACK
(See page BO-104 or BO-109)

20. INSTALL REAR SEAT CUSHION
(See page BO-104 or BO-109)

21. 4-Door vehicle:
INSTALL REAR DOOR OPENING TRIMS

22. 4-Door vehicle:
INSTALL REAR DOOR SCUFF PLATES

23. 2-Door vehicle:
INSTALL FRONT DOOR OPENING TRIM

24. 2-Door vehicle:
INSTALL FRONT DOOR SCUFF PLATES

BO2UE-02

REMOVAL

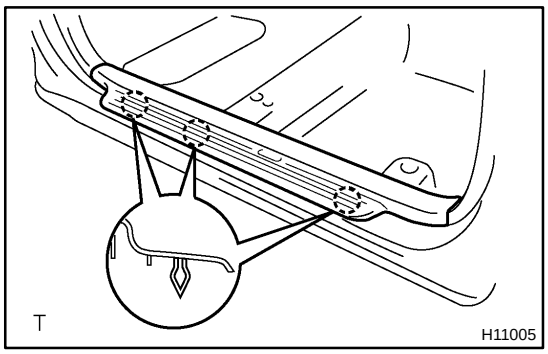

1. 2-Door vehicle:
REMOVE FRONT DOOR SCUFF PLATE

(a) Insert a screwdriver between the front door scuff plate and body to pry it out.

HINT:
Tape the screwdriver tip before use.

(b) Use the same manner described above to the other side.

2. 2-Door vehicle:
REMOVE FRONT DOOR OPENING TRIMS

Remove the front door opening trims except cowl side trim parts.

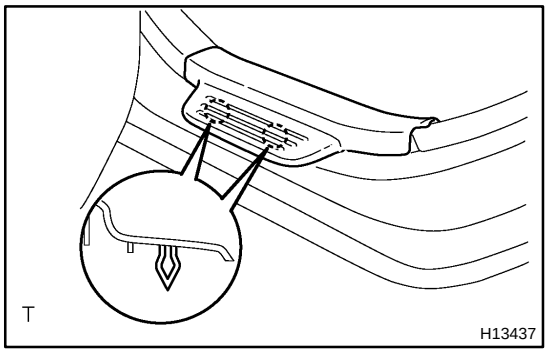

3. 4-Door vehicle:
REMOVE REAR DOOR SCUFF PLATES

(a) Insert a screwdriver between the rear door scuff plate and body to pry it out.

HINT:
Tape the screwdriver tip before use.

(b) Use the same manner described above to the other side.

4. 4-Door vehicle:
REMOVE REAR DOOR OPENING TRIMS

5. REMOVE REAR SEAT CUSHION
(See page BO-101 or BO-106)

6. REMOVE REAR SEATBACK
(See page BO-101 or BO-106)

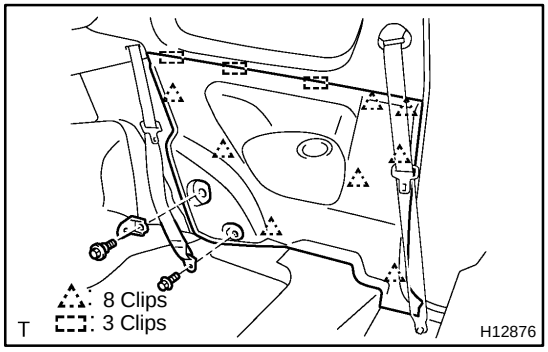

7. 2-Door vehicle:
REMOVE QUARTER TRIM

(a) Remove the bolt and rear seat outer belt floor anchor.
Torque: 41 N·m (420 kgf·cm, 30 ft·lbf)

(b) w/ Split type rear seat:
Remove the bolt and rear seatback hinge.
Torque: 41 N·m (420 kgf·cm, 30 ft·lbf)

(c) Insert a screwdriver between the quarter trim and body to pry it out.

HINT:

Tape the screwdriver tip before use.

(d) Use the same manner described above to the other side.

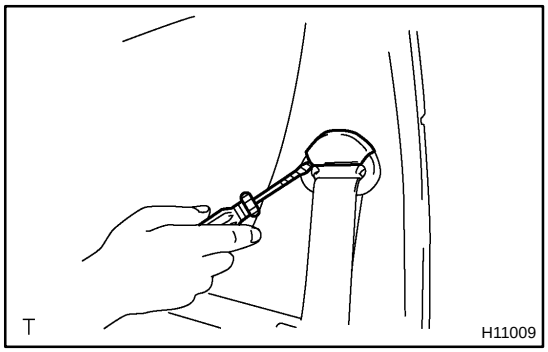

8. 2-Door vehicle:
REMOVE ROOF SIDE INNER GARNISH

(a) Using a screwdriver, open the seat belt shoulder anchor cover cap.

HINT:

Tape the screwdriver tip before use.

(b) Remove the bolt and front seat outer belt shoulder anchor.

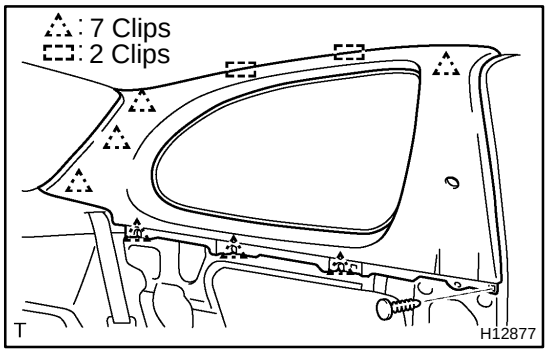

(c) Remove the clip.

(d) Insert a screwdriver between the roof side inner garnish and body to pry it out.

HINT:

Tape the screwdriver tip before use.

(e) Use the same manner described above to the other side.

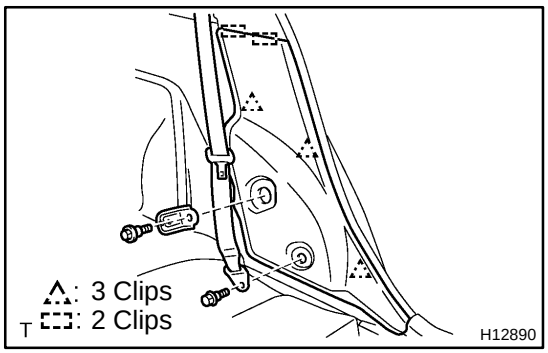

9. 4-Door vehicle:
REMOVE REAR SEAT SIDE GARNISH

(a) Remove the bolt and rear seat outer belt floor anchor.

(b) w/ Split type rear seat:
Remove the bolt and rear seatback hinge.

(c) Using a screwdriver, remove the rear seat side garnish.

HINT:

Tape the screwdriver tip before use.

(d) Use the same manner described above to the other side.

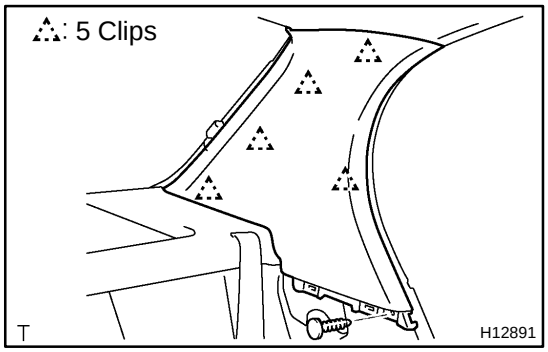

10. 4-Door vehicle:
REMOVE ROOF SIDE INNER GARNISH

(a) Remove the clip.

(b) Insert a screwdriver between the roof side inner garnish and body to pry it out.

HINT:

Tape the screwdriver tip before use.

(c) Use the same manner described above to the other side.

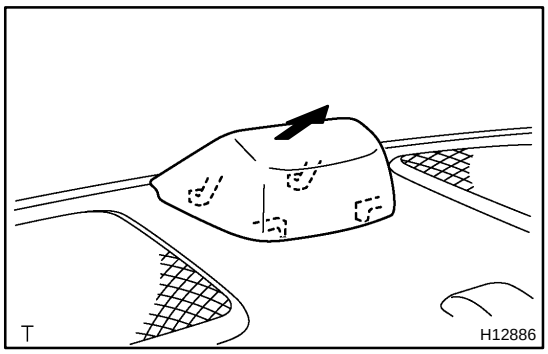

11. REMOVE HIGH-MOUNTED STOP LIGHT

(a) Remove the high-mounted stop light as shown in the illustration.

(b) Disconnect the connector.

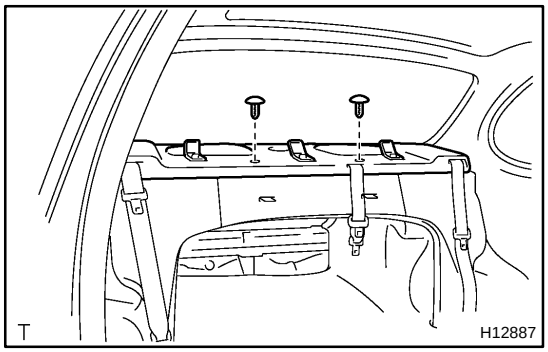

12. REMOVE PACKAGE TRAY TRIM PANEL

(a) Remove the 2 clips.

(b) Remove the rear seat belts through the cutout on the package tray trim.

(c) Pull the package tray trim panel forward to remove it.

13. REMOVE PACKAGE TRAY TRIM SILENCER PAD

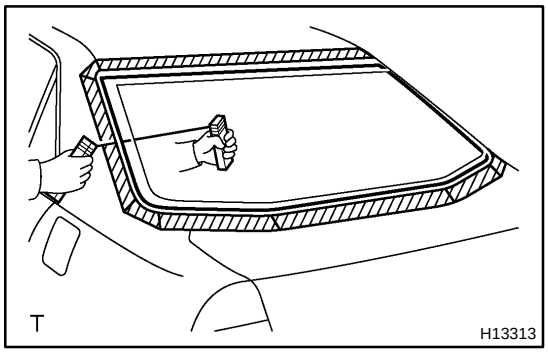

14. REMOVE BACK WINDOW GLASS

(a) Disconnect the connector.

(b) Push piano wire through from the interior.

(c) Tie both wire ends to wooden blocks or similar objects.

HINT:

Apply protective tape to the outer surface to keep the surface from being scratched.

NOTICE:

When separating the glass, take care not to damage the paint and exterior.

(d) Cut the adhesive by pulling the piano wire around it.

HINT:

Cut the adhesive areas as shown in the illustration, leaving the adhesive where the stoppers are.

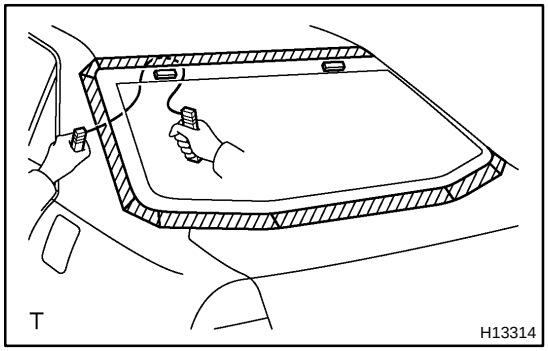

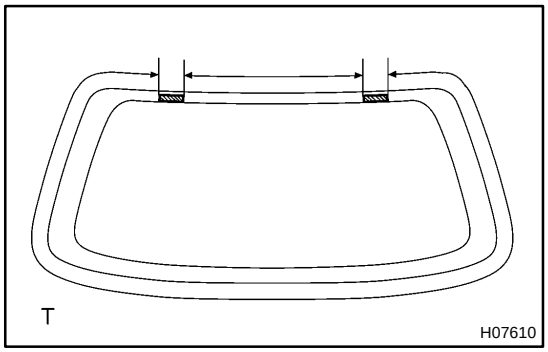

(e) Let the piano wire pass as shown in the illustration, cut off the adhesive sticking to the stoppers, then remove the glass.

NOTICE:

- **Do not damage the glass stoppers.**
- **Leave as much of the adhesive on the body as possible when cutting off the glass.**

CLIP

BO2HV-01

REPLACEMENT

The removal and installation methods of typical clips used in body parts are shown in the table below.
HINT:
If the clip is damaged during the operation, always replace it with a new clip.

Shape (Example)	Removal/Installation
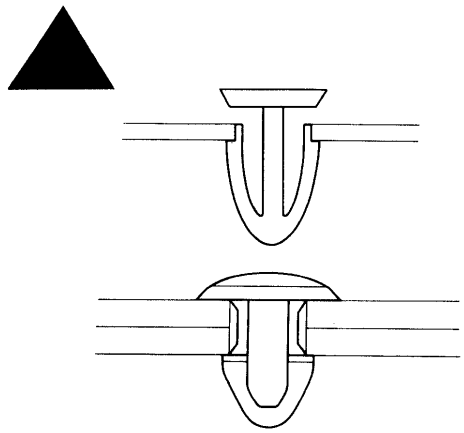	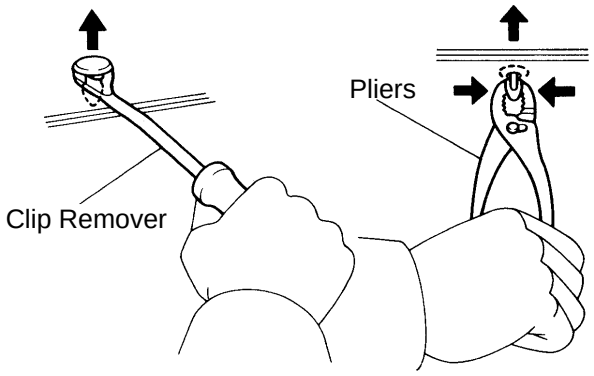
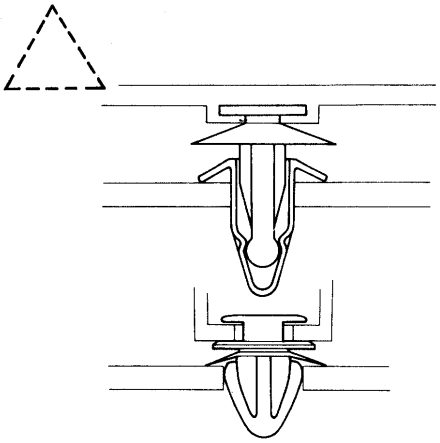	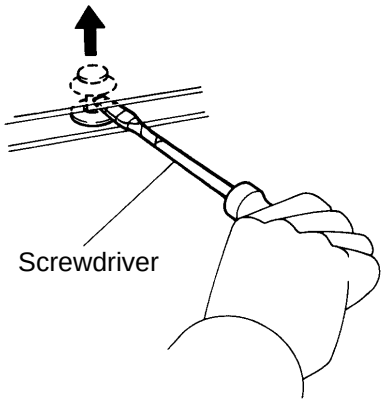
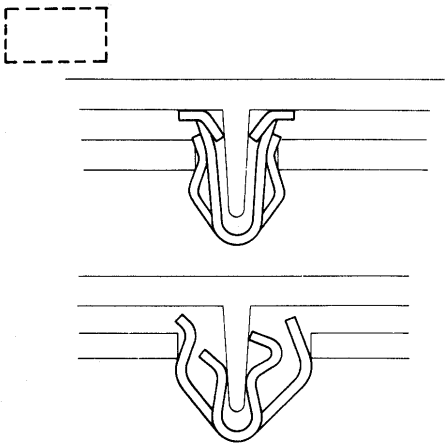	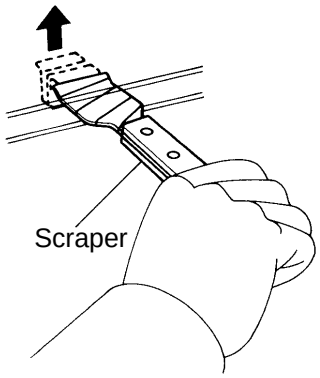

V00005

Shape (Example)	Removal/Installation
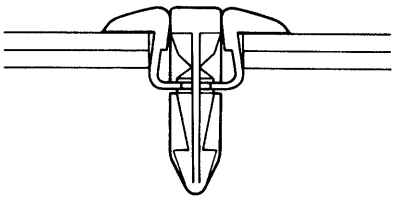	Removal Installation 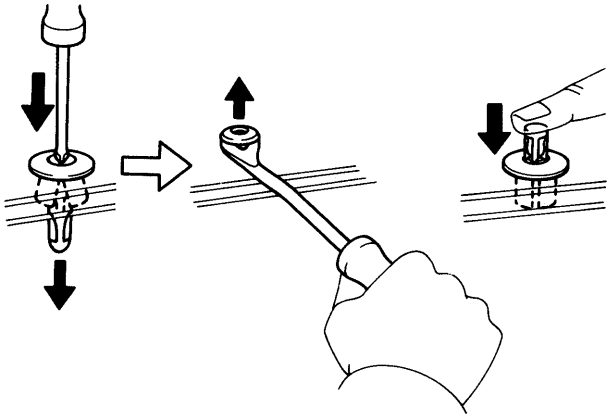
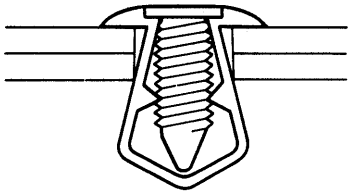	Removal Installation 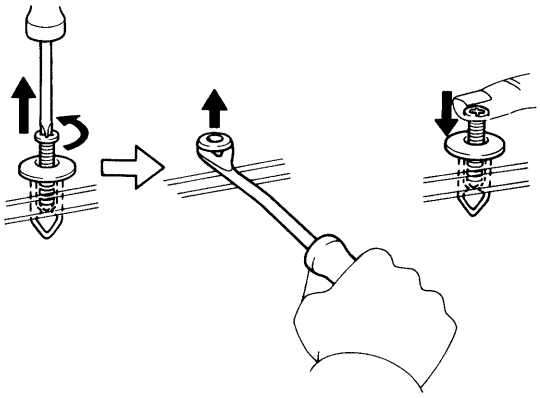

V00012

FRONT BUMPER

COMPONENTS

BO2HW-05

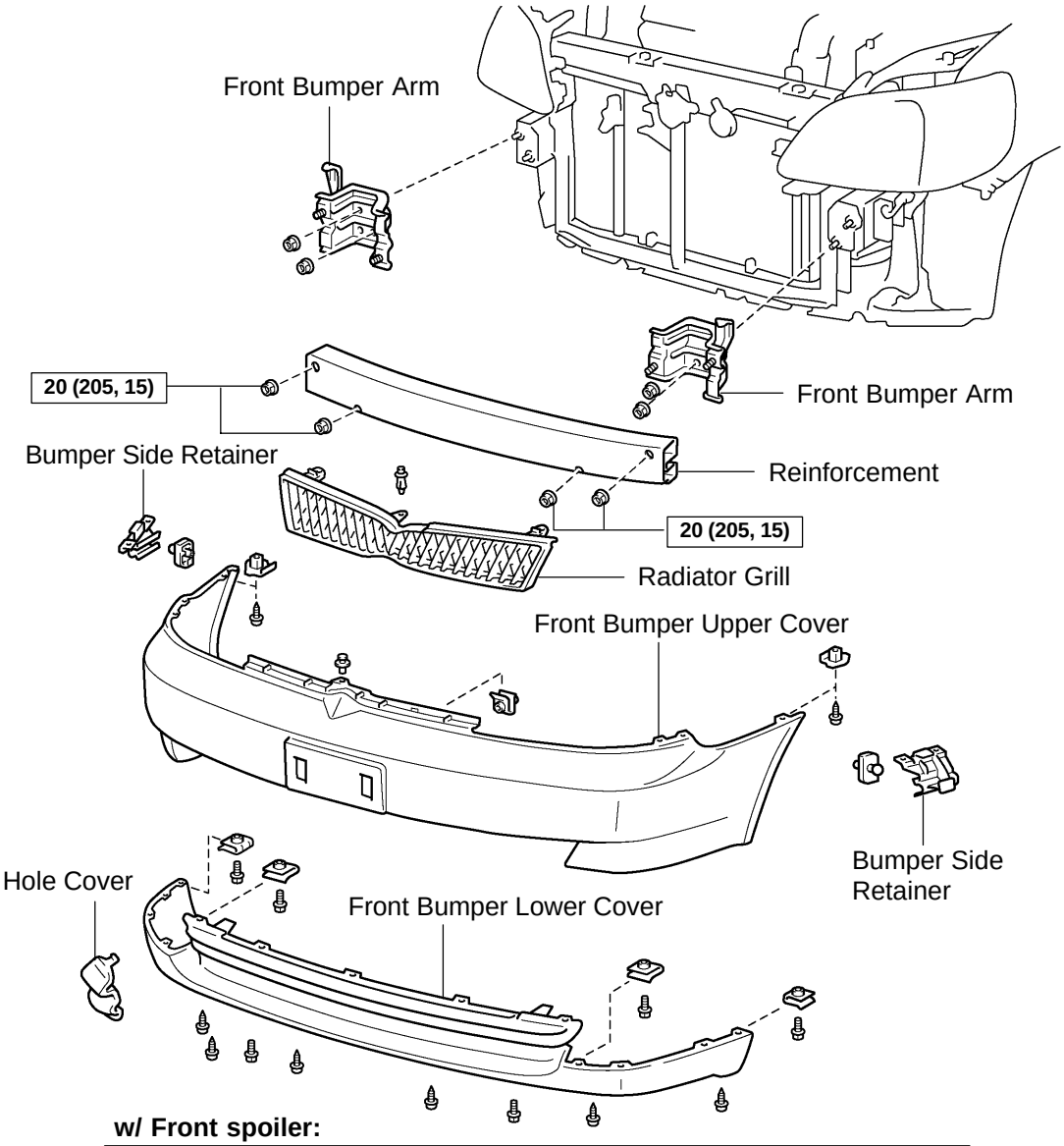

w/ Front spoiler:

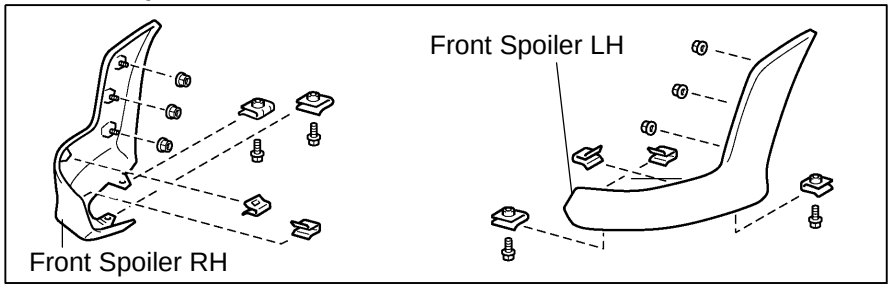

T N·m (kgf·cm, ft·lbf) : Specified torque

H12471

BO2I1-03

ADJUSTMENT

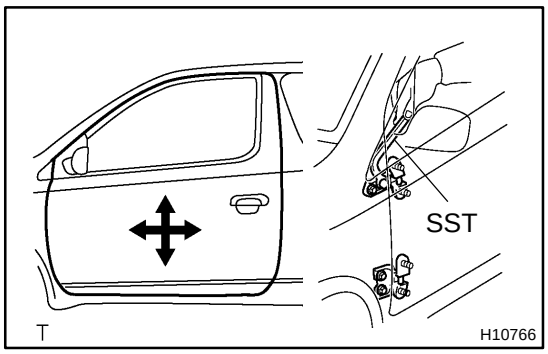

1. ADJUST DOOR IN FORWARD/REARWARD AND VERTICAL DIRECTIONS

Using SST, adjust the door by loosening the body side hinge bolts.

SST 09812-00010

Torque: 43 N·m (440 kgf·cm, 32 ft·lbf)

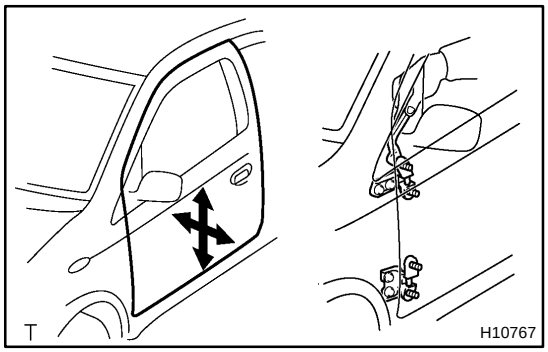

2. ADJUST DOOR IN LEFT/RIGHT AND VERTICAL DIRECTIONS

Loosen the door side hinge bolts to adjust.

HINT:

Substitute the standard bolt for the centering bolt (See page BO-6).

Torque: 43 N·m (440 kgf·cm, 32 ft·lbf)

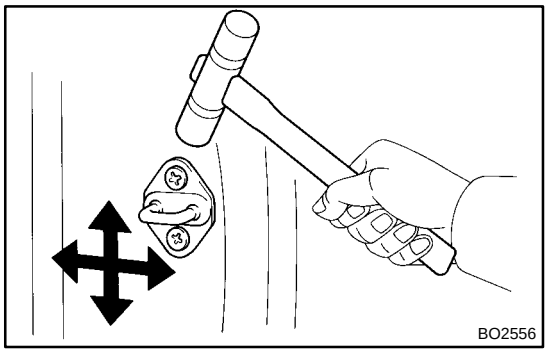

3. ADJUST DOOR LOCK STRIKER

(a) Check that the door fit and door lock linkages are adjusted correctly.

(b) Loosen the striker mounting screws to adjust.

Torque: 23 N·m (230 kgf·cm, 17 ft·lbf)

(c) Using a plastic hammer, tap the striker to adjust it.

FRONT DOOR

COMPONENTS

BO2HZ-03

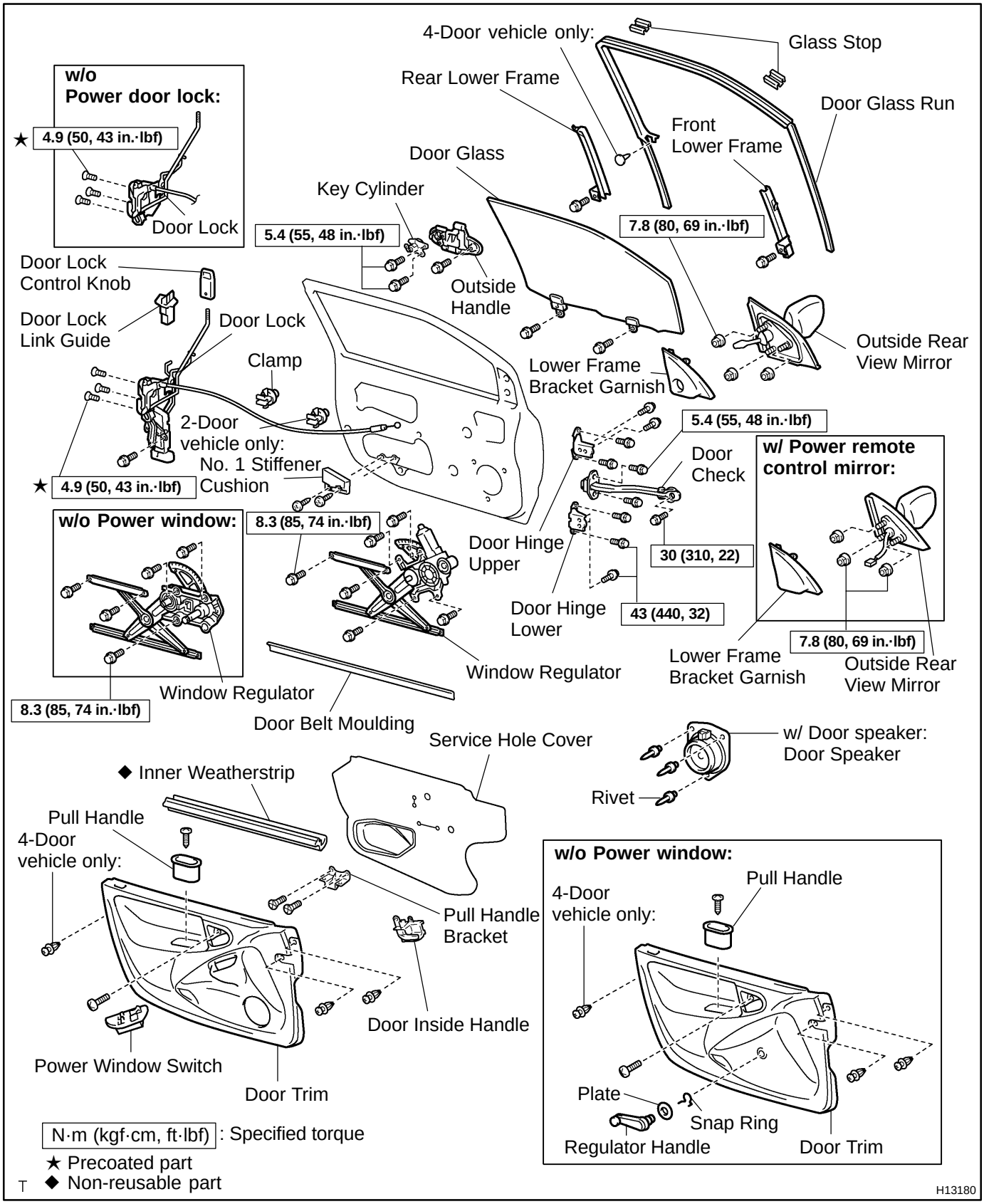

BO2U3-01

DISASSEMBLY

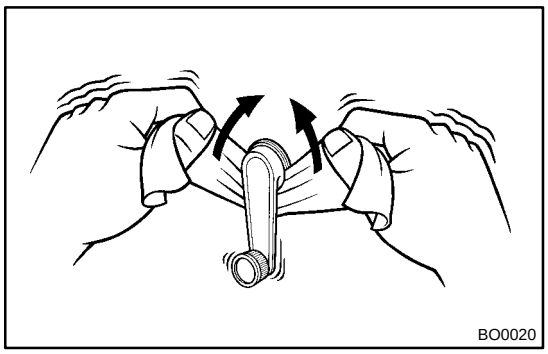

1. w/o Power window:

REMOVE REGULATOR HANDLE

Pull off the snap ring with a shop rag and remove the regulator handle and plate.

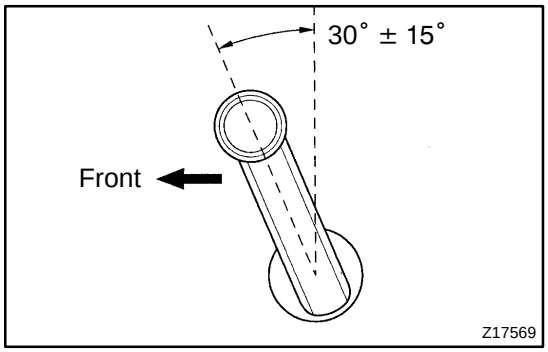

HINT:

At the time of reassembly, please refer to the following item.

With door window fully closed, install the plate and the regulator handle with the snap ring.

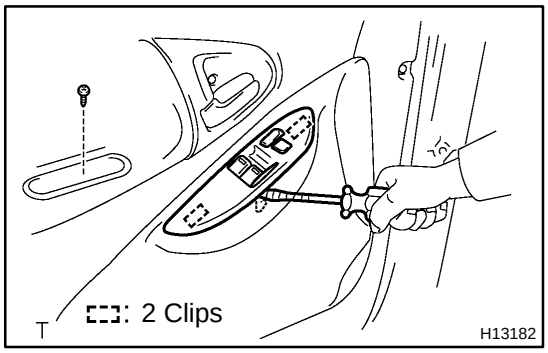

2. w/ Power window:

REMOVE POWER WINDOW SWITCH

(a) Using a screwdriver, remove the power window switch.

HINT:

Tape the screwdriver tip before use.

(b) Disconnect the connector.

3. REMOVE LOWER FRAME BRACKET GARNISH

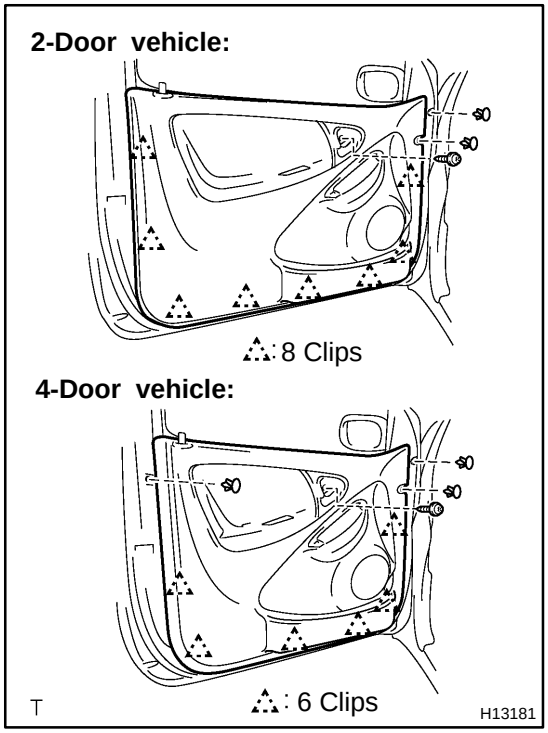

4. REMOVE DOOR TRIM

(a) Remove the screw and pull handle.

(b) 2-Door vehicle:
Remove the screw and 2 clips.

(c) 4-Door vehicle:
Remove the screw and 3 clips.

(d) Insert a screwdriver between the door panel and door trim to pry the trim out.

NOTICE:

Be careful not to damage the door panel and trim.

HINT:

Tape the screwdriver tip before use.

(e) Pull the door trim upward to remove it.

(f) Remove the door lock control knob holder.

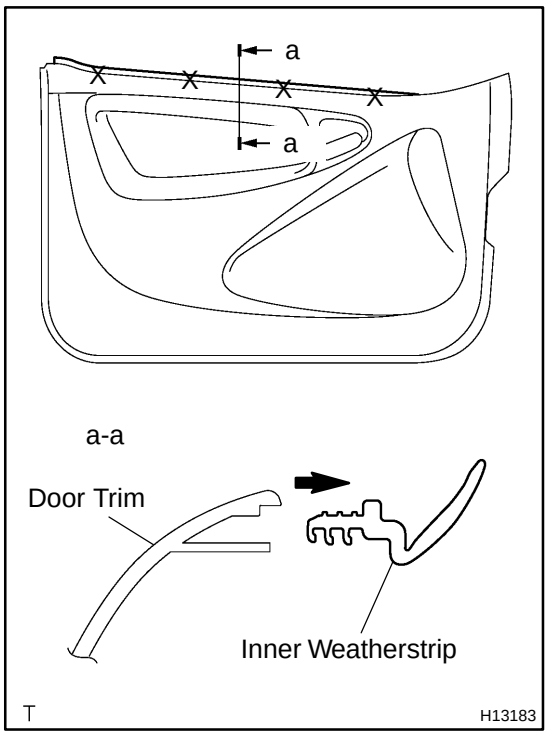

5. REMOVE INNER WEATHERSTRIP

Remove the inner weatherstrip as shown in the illustration.

6. REMOVE OUTSIDE REAR VIEW MIRROR

(a) w/ Power remote control mirror:
Disconnect the connector.

(b) Remove the 3 nuts and rear view mirror.
Torque: 7.8 N·m (80 kgf·cm, 69 in.·lbf)

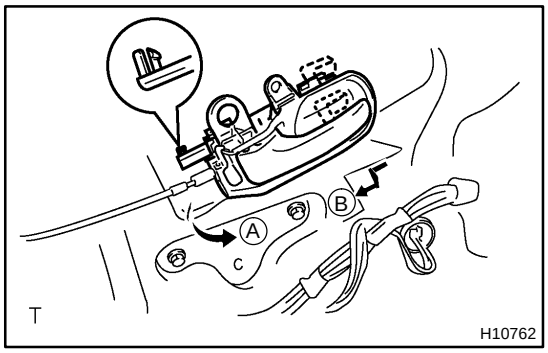

7. REMOVE DOOR INSIDE HANDLE

(a) Remove the door inside handle in order A, B as shown in the illustration.

(b) Disconnect the door lock cable from the door inside handle.

8. REMOVE PULL HANDLE BRACKET

Remove the 2 screws and pull handle bracket.

9. REMOVE SERVICE HOLE COVER

Remove the service hole cover.

HINT:

At the time of reassembly, please refer to the following item.

Bring out the cable through the service hole cover.

10. REMOVE NO. 1 STIFFENER CUSHION

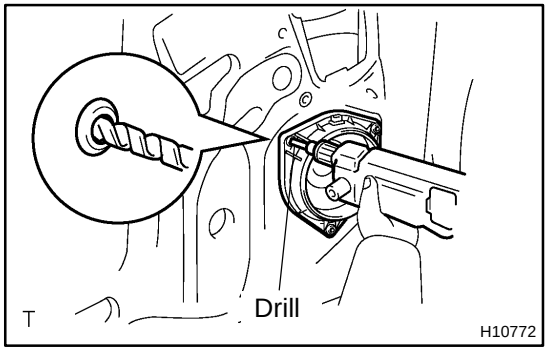

11. w/ Door speaker:
REMOVE DOOR SPEAKER

(a) Using a drill of less then ø 4.8 mm (0.189 in.), drill out the rivet heads and remove the speaker.

(b) Disconnect the connector.

(c) Using a vacuum cleaner, remove the drilled rivets and their dust from the inside of the door panel.

CAUTION:
The cut rivet and rivet cutter will be hot, avoid touching them.
NOTICE:
- **Do not jiggle the rivet cutter while cutting.**
- **You may enlarge the rivet hole or damage the rivet cutter.**

HINT:
Do not drill the door inner hole.

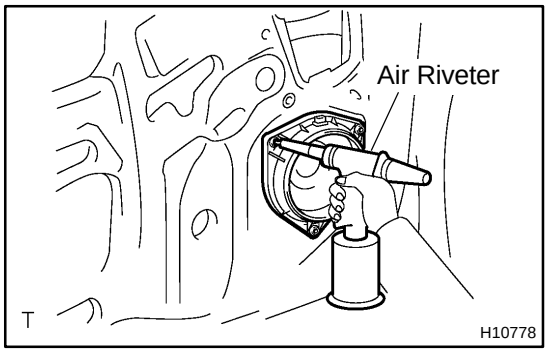

HINT:
At the time of reassembly, please refer to the following item.
Using an air riveter, strike rivets into the door panel to install the speaker to the door panel.

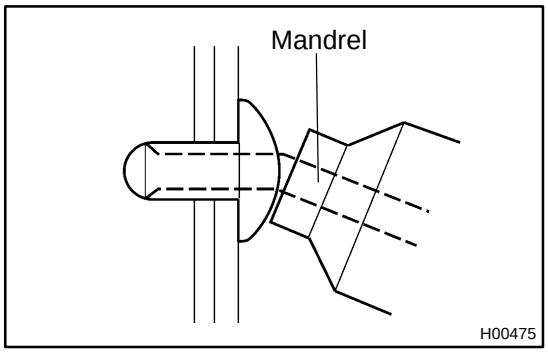

NOTICE:
At the time of reassembly, please refer to the following item.
If the rivet is not positioned perpendicularly it will bend the mandrel. When the trigger is then pulled, it may damage the air riveter.

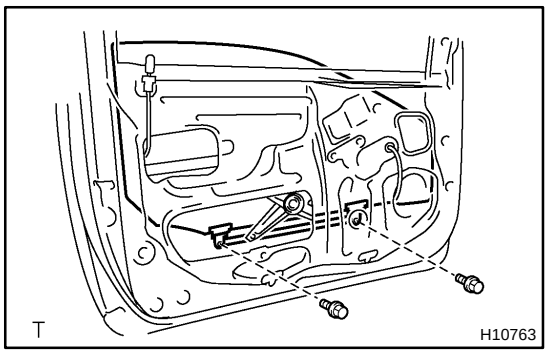

12. REMOVE DOOR GLASS
(a) Open the door glass until the bolts appear in the service hole.
(b) Remove the 2 bolts.
NOTICE:
Be careful not to drop the door glass.
(c) Pull the door glass upward to remove it.

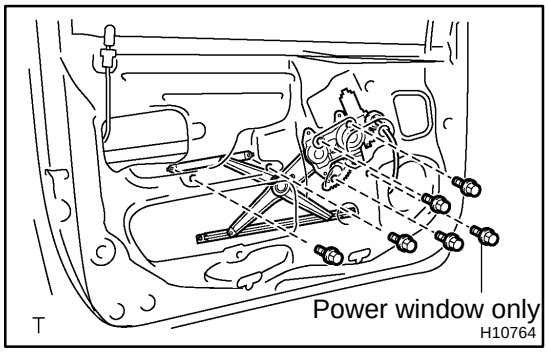

13. REMOVE WINDOW REGULATOR
(a) w/ Power window:
Disconnect the connector.
(b) w/ Power window:
Remove the 6 bolts and window regulator.
Torque: 8.3 N·m (85 kgf·cm, 74 in.·lbf)
(c) w/o Power window:
Remove the 5 bolts and window regulator.
Torque: 8.3 N·m (85 kgf·cm, 74 in.·lbf)

HINT:
Remove the regulator through the service hole.

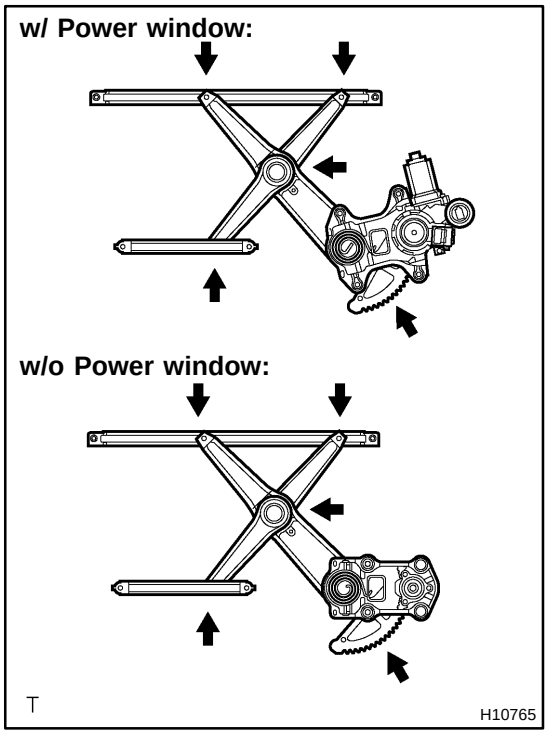

HINT:
At the time of reassembly, please refer to the following item.
Apply MP grease to the window regulator.
NOTICE:
At the time of reassembly, please refer to the following item.
Do not apply grease to the spring of the window regulator.

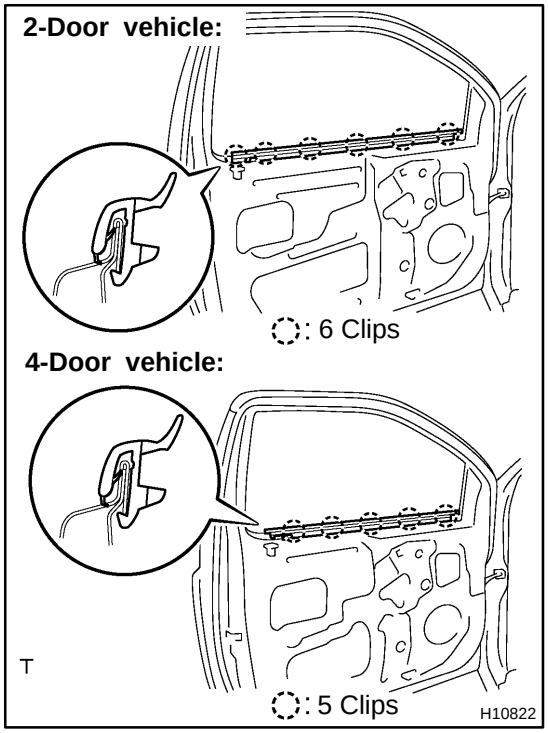

14. REMOVE DOOR BELT MOULDING
Using a scraper, remove the door belt moulding.
HINT:
Tape the scraper tip before use.
15. REMOVE DOOR GLASS RUN
(a) Remove the clip and door glass run.
(b) Remove the 2 glass stops.
HINT:
Pull the glass run upward.
16. REMOVE FRONT AND REAR LOWER FRAMES
Remove the 2 bolts and 2 lower frames.
HINT:
Remove the lower frames through the service hole.

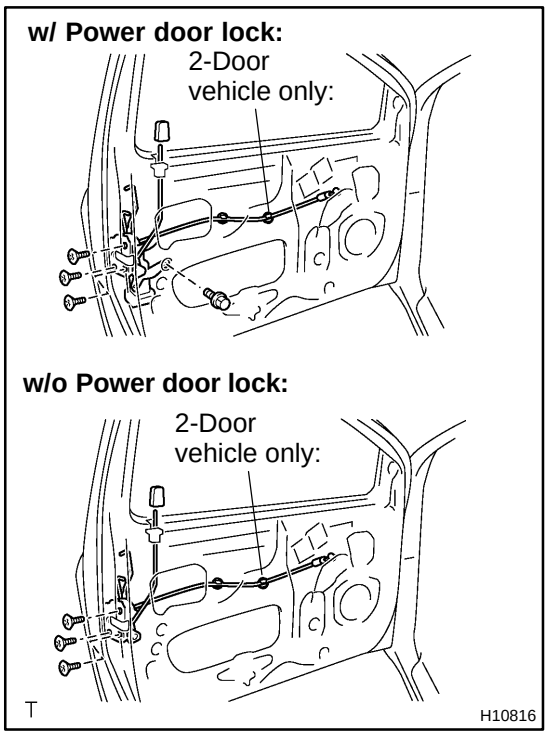

17. REMOVE DOOR LOCK

(a) Remove the door lock control knob.

(b) Disconnect the control cable from the clamp.

(c) Disconnect the 2 links from the outside handle and key cylinder.

(d) w/ Power door lock:
Disconnect the connector and remove the bolt and 3 screws.
Torque: 4.9 N·m (50 kgf·cm, 43 in.·lbf)

(e) w/o Power door lock:
Remove the 3 screws.
Torque: 4.9 N·m (50 kgf·cm, 43 in.·lbf)

HINT:

At the time of reassembly, please refer to the following item.

Apply adhesive to 3 screws.
Part No. 08833-00070, THREE BOND 1324 or equivalent

(f) Remove the door lock through the service hole.

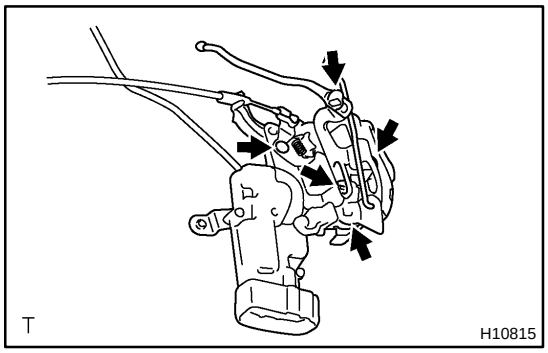

HINT:

At the time of reassembly, please refer to the following item.

Apply MP grease to the sliding and rotating parts of the door lock.

18. REMOVE DOOR LOCK LINK GUIDE AND CLAMP

(a) 2-Door vehicle:
Using a screwdriver, remove the door lock link guide and 2 clamps.

(b) 4-Door vehicle:
Using a screwdriver, remove the door lock link guide and clamp.

HINT:

Tape the screwdriver tip before use.

19. REMOVE OUTSIDE HANDLE

(a) Remove the 2 bolts and outside handle with key cylinder.
Torque: 5.4 N·m (55 kgf·cm, 48 in.·lbf)

(b) Remove the bolt and key cylinder from the outside handle.
Torque: 5.4 N·m (55 kgf·cm, 48 in.·lbf)

BO2I2-02

REASSEMBLY

Reassembly is in the reverse order of disassembly (See page BO-8).

FRONT SEAT

COMPONENTS

BO2IF-05

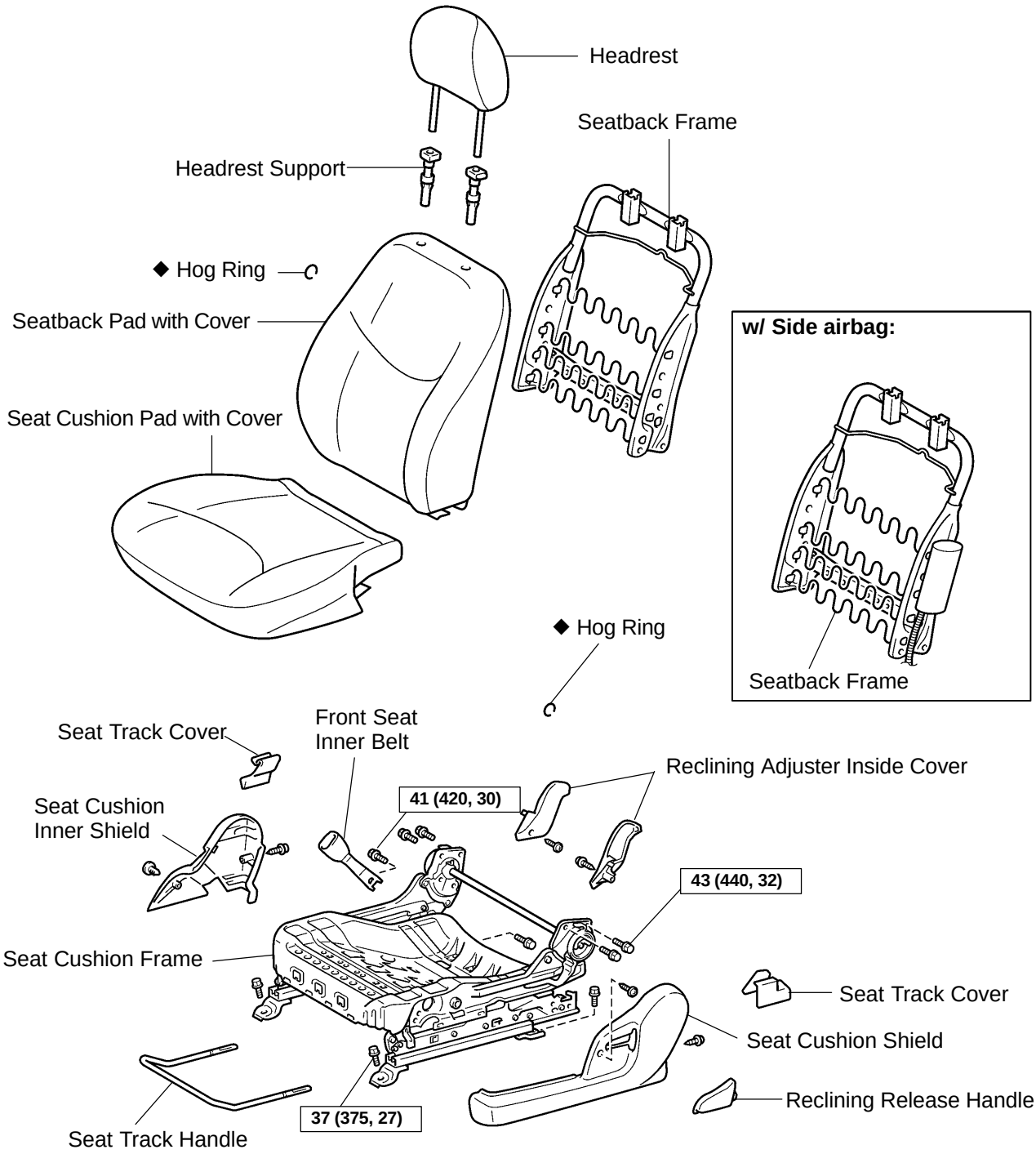

N·m (kgf·cm, ft·lbf) : Specified torque

◆ Non-reusable part

H16090

BO41P-01

DISASSEMBLY

1. REMOVE HEADREST

2. REMOVE RECLINING RELEASE HANDLE

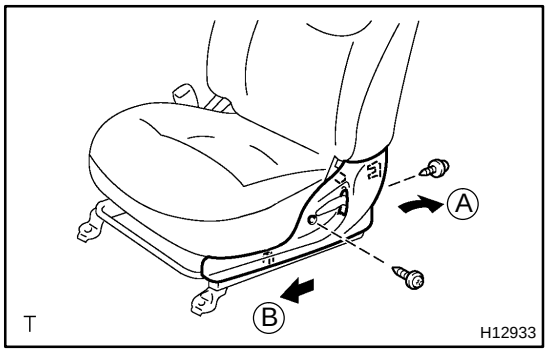

3. REMOVE SEAT CUSHION SHIELD

Remove the 2 screws and seat cushion shield as shown in the illustration.

HINT:

Remove the seat cushion shield in order A, B as shown in the illustration.

4. REMOVE FRONT SEAT INNER BELT

Remove the bolt and front seat inner belt.

Torque: 41 N·m(420 kgf·cm, 30 ft·lbf)

5. REMOVE SEAT CUSHION INNER SHIELD

Remove the clip, screw and seat cushion inner shield.

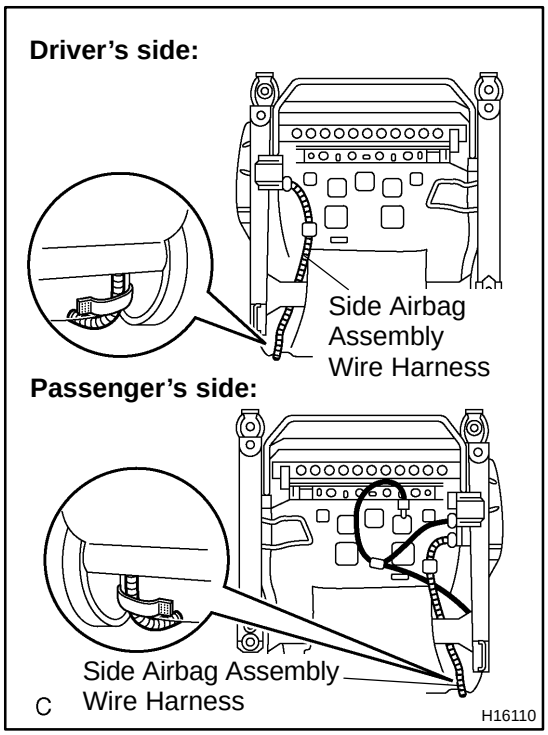

6. REMOVE SEATBACK ASSEMBLY

(a) w/ Side airbag:

Disconnect and disengage the connector and wire harness.

NOTICE:

Be careful not to damage the connector and wire harness.

(b) Remove the hog rings.

HINT:

At the time of reassembly, please refer to following item.

When installing hog rings, take care to prevent wrinkles as little as possible.

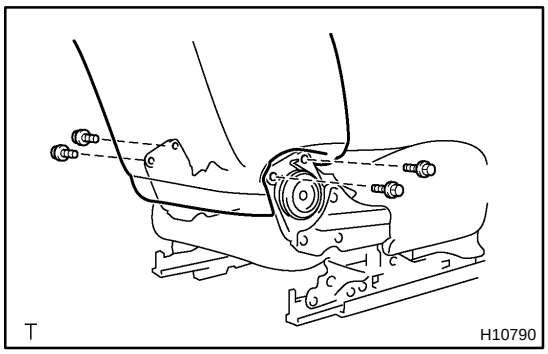

(c) Remove the 4 bolts and seatback assembly.
Torque: 43 N·m (440 kgf·cm, 32ft·lbf)

7. REMOVE SEATBACK PAD WITH COVER

(a) Remove the headrest supports.

(b) Remove the seatback pad with cover from the seatback frame.

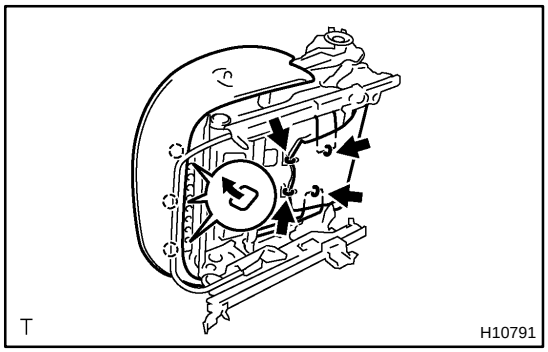

8. REMOVE SEAT CUSHION PAD WITH COVER

(a) Remove the hog rings.

HINT:

At the time of reassembly, please refer to following item.

When installing hog rings, take care to prevent wrinkles as little as possible.

(b) Disengage the seat cushion cover hooks and remove the seat cushion cover with pad from the seat cushion frame.

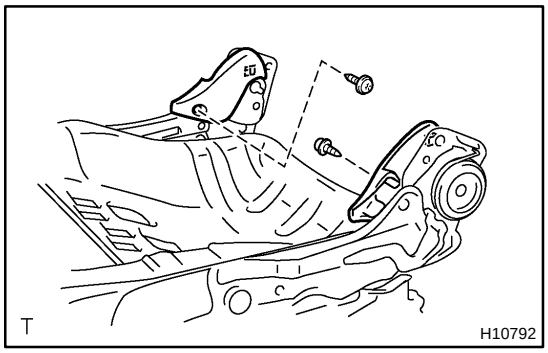

9. REMOVE RECLINING ADJUSTER INSIDE COVERS

Remove the 2 screws and 2 reclining adjuster inside covers.

10. REMOVE SEAT TRACK HANDLE

BO2IJ-04

INSTALLATION

INSTALL FRONT SEAT

(a) Slide the front seat to the most front position.

NOTICE:

Make sure that seat adjuster locks.

(b) Without holding the seat track handle, mount the seat to the vehicle.

HINT:

If holding the seat track handle, the adjusted most front positions slip off.

(c) w/ Side airbag:
Connect the connector.

(d) w/ Seat belt warning light:
Connect the connector.

(e) Tighten the bolts on the rear side temporarily, from the bolt on the inner side tighten them completely.
Torque: 37 N·m (375 kgf·cm, 27 ft·lbf)

(f) Slide the seat to the most rear position to install the bolts on the front side.
Torque: 37 N·m (375 kgf·cm, 27 ft·lbf)

(g) Install the seat track covers.

BO2II-01

REASSEMBLY

Reassembly is in the reverse order of disassembly (See page BO-96).

BO2IG-04

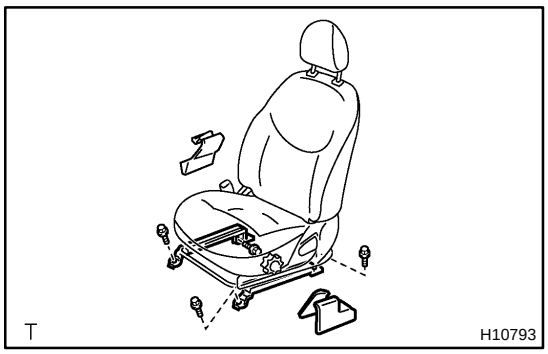

REMOVAL

REMOVE FRONT SEAT

NOTICE:

- **If the wiring connector of the SRS is disconnected and the ignition switch is ON or ACC position, DTCs will be recorded.**
- **Never use the airbag parts from another vehicle. When replacing parts, replace them with new parts.**

(a) Using a screwdriver, remove the seat track covers.

HINT:

Tape the screwdriver tip before use.

(b) Remove the 4 bolts.

(c) w/ Seat belt warning light:
Disconnect the connector.

(d) w/ Side airbag:
Disconnect the connector.

(e) Remove the front seat.

NOTICE:

Be careful not to damage the body.

BO2IA-03

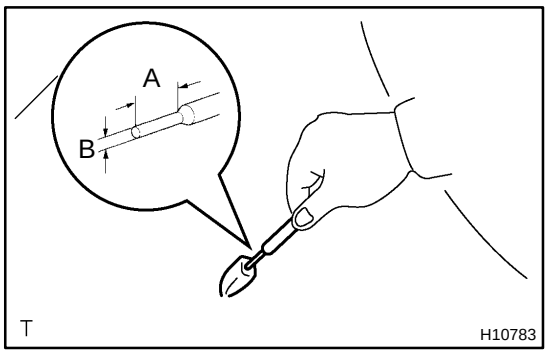

ADJUSTMENT

ADJUST FRONT WASHER NOZZLE

Using a tool like the one shown in the illustration, change the direction of the nozzle hole to adjust the point where washer fluid hits the windshield.

A: 2.0 - 2.5 mm (0.079 - 0.098 in.)

B: 0.7 - 0.75 mm (0.028 - 0.0295 in.)

FRONT WIPER AND WASHER

COMPONENTS

BO2I7-03

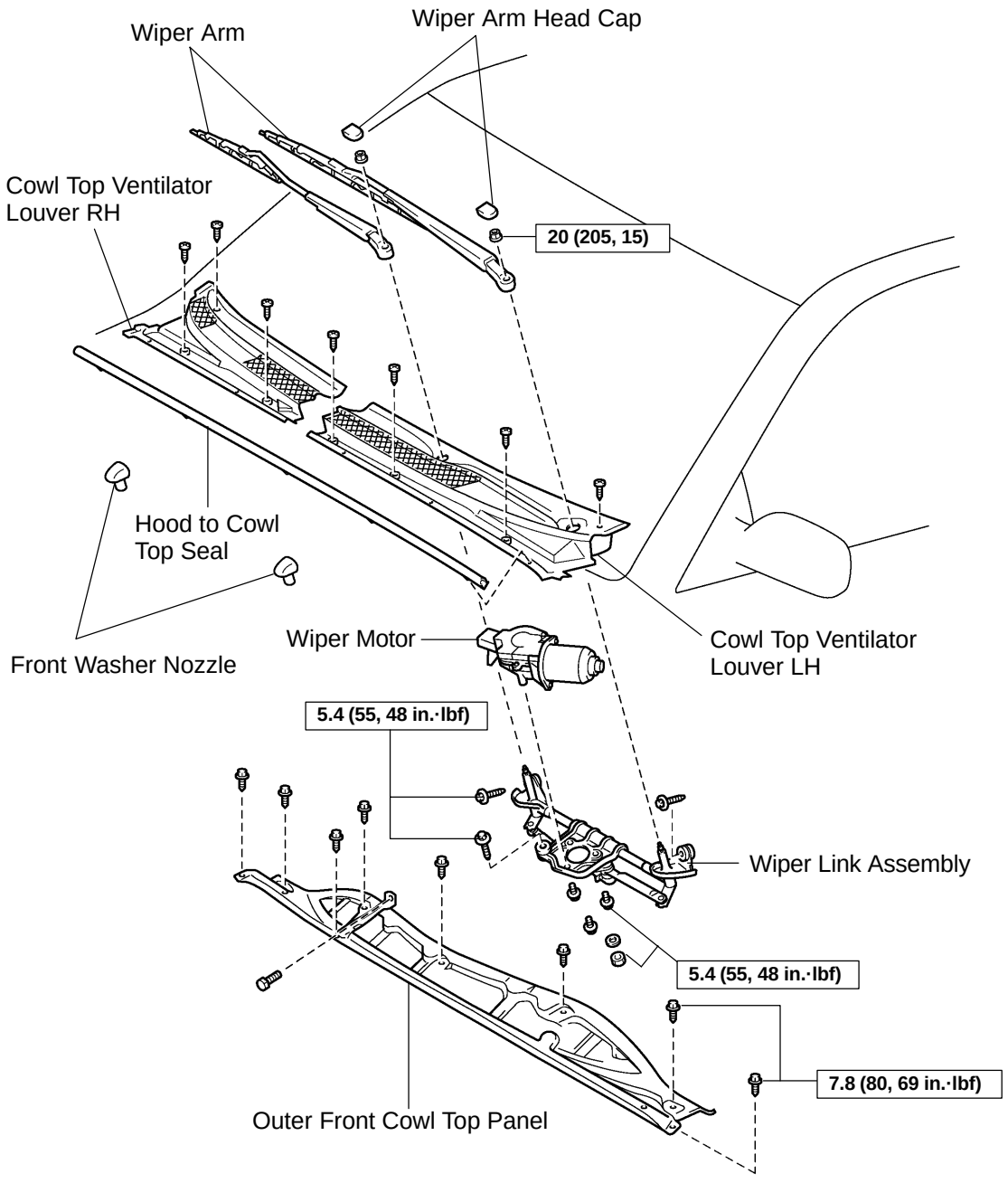

T N·m (kgf·cm, ft·lbf) : Specified torque

H10779

BO2U8-02

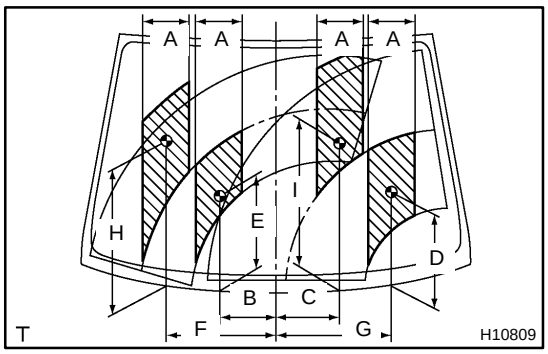

INSPECTION

INSPECT WASHER NOZZLE

(a) Except U. S. A. cold area and CANADA:
While operating the washer, check that points where the washer fluid from the nozzles hits the windshield and the upsurge area are within the range indicated by the hatched line.

A: Approx. 150 mm (5.91 in.)
B: Approx. 186 mm (7.32 in.)
C: Approx. 216 mm (8.50 in.)
D: Approx. 305 mm (12.01 in.)
E: Approx. 339 mm (13.35 in.)
F: Approx. 366 mm (14.41 in.)
G: Approx. 390 mm (15.35 in.)
H: Approx. 454 mm (17.87 in.)
I: Approx. 487 mm (19.17 in.)

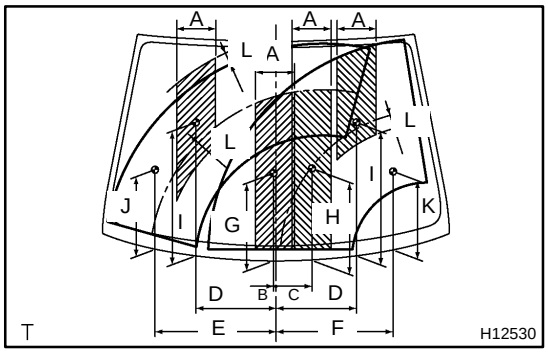

(b) U. S. A. cold area and CANADA:
While operating the washer, check that points where the washer fluid from the nozzles hits the windshield and the upsurge area are within the range indicated by the hatched line.

A: Approx. 150 mm (5.91 in.)
B: Approx. 7 mm (0.28 in.)
C: Approx. 135 mm (5.31 in.)
D: Approx. 306 mm (12.05 in.)
E: Approx. 467 mm (18.39 in.)
F: Approx. 442 mm (17.40 in.)
G: Approx. 334 mm (13.15 in.)
H: Approx. 344 mm (13.54 in.)
I: Approx. 504 mm (19.84 in.)
J: Approx. 302 mm (11.89 in.)
K: Approx. 294 mm (11.57 in.)
L: Approx. 50 mm (1.97 in.)

BO2IB-04

INSTALLATION

1. INSTALL WASHER NOZZLES

(a) Install the washer nozzles to the hood.

(b) Connect the washer hoses.

2. INSTALL OUTER FRONT COWL TOP PANEL

(a) Install the outer front cowl top panel with 9 bolts.
Torque: 7.8 N·m (80 kgf·cm, 69 in.·lbf)

(b) Push in the wiper motor wire harness with the grommet.

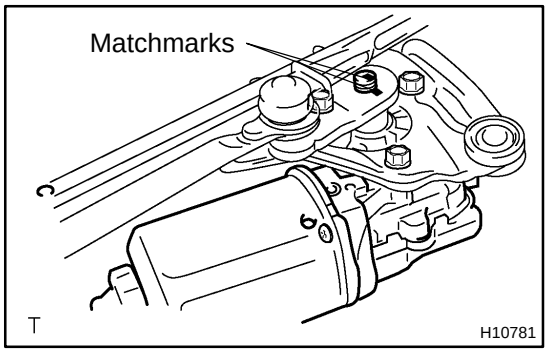

3. INSTALL WIPER MOTOR

(a) Install the wiper motor with the 3 bolts to the wiper link.
Torque: 5.4 N·m (55 kgf·cm, 48 in.·lbf)

(b) Align the matchmarks on the wiper link and wiper motor, then install the washer and nut.
Torque: 5.4 N·m (55 kgf·cm, 48 in.·lbf)

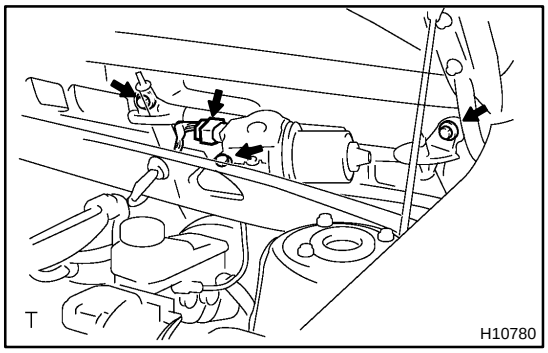

4. INSTALL WIPER MOTOR ASSEMBLY

(a) Install the wiper motor assembly with 3 bolts.
Torque: 5.4 N·m (55 kgf·cm, 48 in.·lbf)

(b) Connect the connector.

5. INSTALL COWL TOP VENTILATOR LOUVERS

Install the cowl top ventilator louver LH and RH, then install the 7 clips.

6. INSTALL HOOD TO COWL TOP SEAL

7. INSTALL WIPER ARMS

(a) Operate the wiper motor once and turn the wiper switch OFF.

(b) Install the wiper arms and tighten nuts by hand.

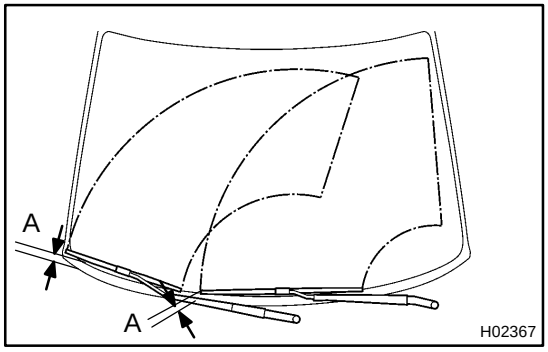

(c) Adjust the installation position of the wiper arms to the positions as shown in the illustration.
A: Approx. 34 mm (1.34 in.)

(d) Torque the 2 nuts.
Torque: 20 N·m (205 kgf·cm, 15 ft·lbf)

(e) Install the 2 wiper arm head caps.

BO2I8-06

REMOVAL

1. REMOVE WIPER ARMS

Remove the 2 wiper arm head caps, 2 nuts and 2 wiper arms.

2. REMOVE COWL TOP VENTILATOR LOUVERS

(a) Remove the hood to cowl top seal.

(b) Remove the 7 clips, then pull out the cowl top ventilator louver RH and LH.

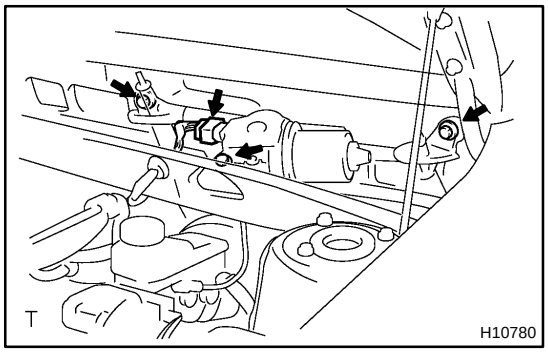

3. REMOVE WIPER MOTOR ASSEMBLY

(a) Disconnect the connector.

(b) Remove the 3 bolts and wiper motor assembly.

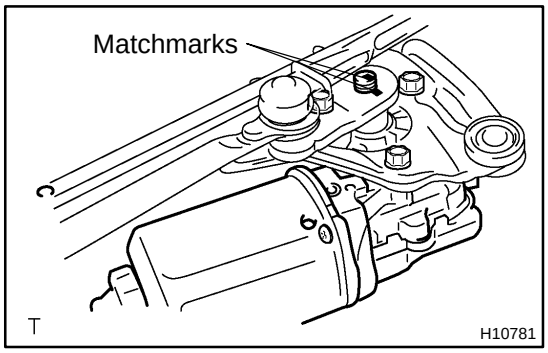

4. REMOVE WIPER MOTOR

(a) Remove the nut and washer.

(b) Place the matchmarks on the wiper link and motor.

(c) Remove the 3 bolts and motor from the wiper link assembly.

5. REMOVE OUTER FRONT COWL TOP PANEL

(a) Pull out the wiper motor wire harness with the grommet.

(b) Remove the 9 bolts and outer front cowl top panel.

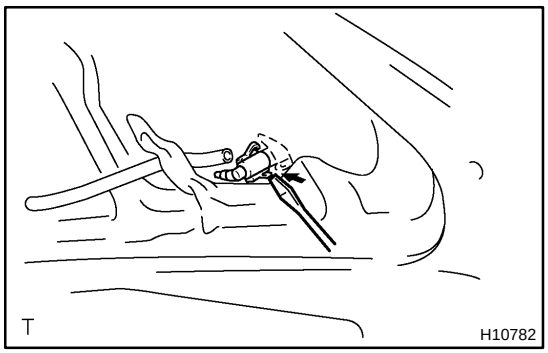

6. REMOVE FRONT WASHER NOZZLE

(a) Disconnect the washer hose.

(b) Using a screwdriver, remove the front washer nozzle from the hood.

HINT:

Tape the screwdriver tip before use.

(c) Use the same manner described above to the other side.

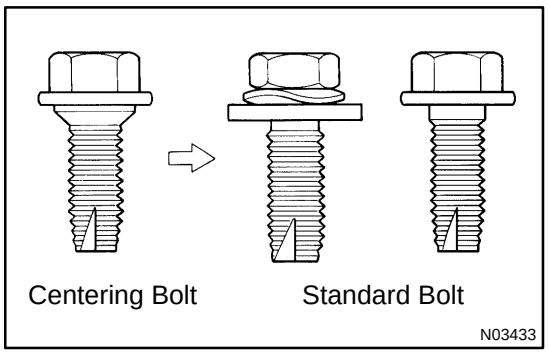

HOOD

ADJUSTMENT

BO2HY-02

HINT:

Since the centering bolt is used as the hood hinge and lock set bolt, the hood and lock can not be adjusted with it on. Substitute the standard bolt for the centering bolt.

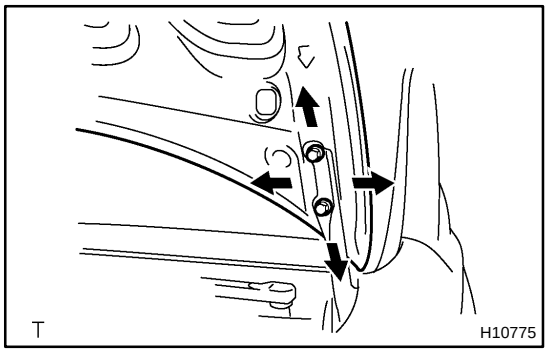

1. ADJUST HOOD IN FORWARD/REARWARD AND LEFT/RIGHT DIRECTIONS

Adjust the hood by loosening the hood side hinge bolts.

Torque: 11 N·m (115 kgf·cm, 8 ft·lbf)

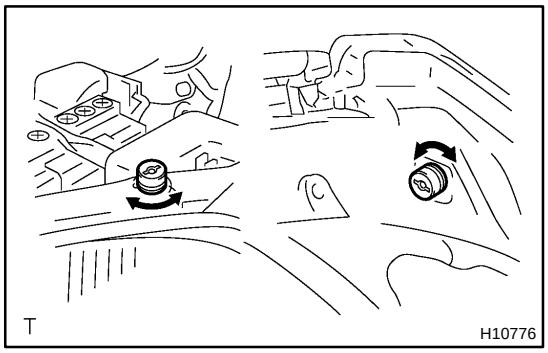

2. ADJUST FRONT EDGE OF HOOD IN VERTICAL DIRECTION

Adjust the hood by turning the cushions.

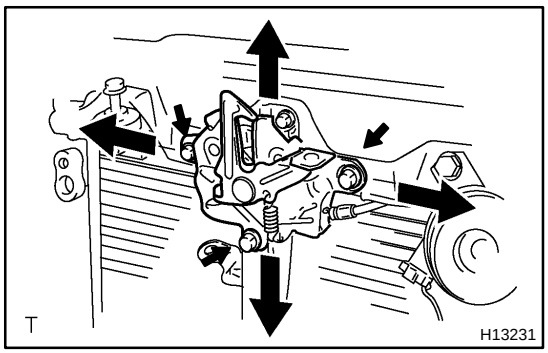

3. ADJUST HOOD LOCK

Adjust the lock by loosening the 3 bolts.

Torque: 7.8 N·m (80 kgf·cm, 69 in.·lbf)

INSTRUMENT PANEL

BO2H4-04

COMPONENTS

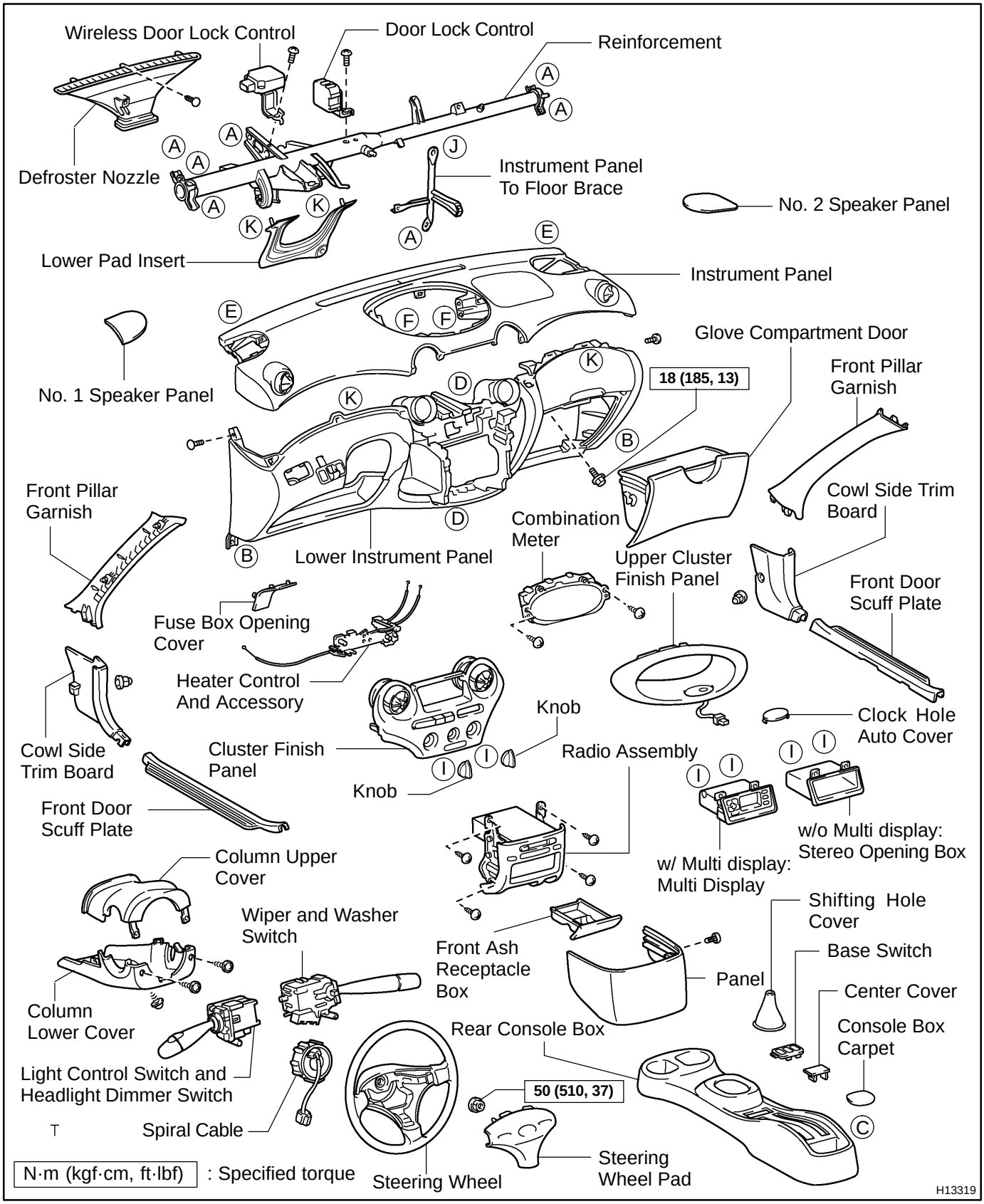

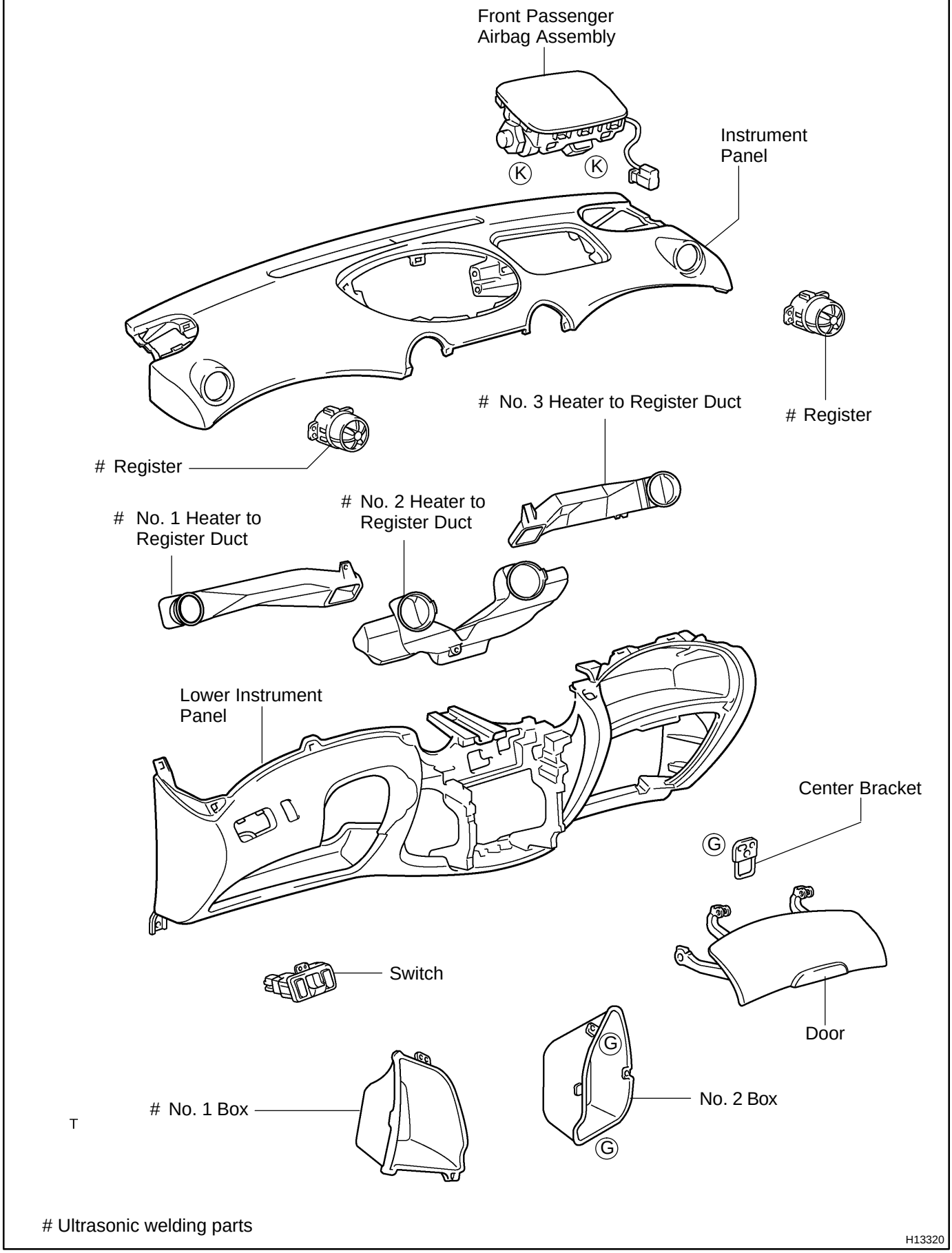
Front Passenger
Airbag Assembly
K
K
Instrument
Panel
Register
No. 3 Heater to Register Duct
Register
No. 2 Heater to
Register Duct
No. 1 Heater to
Register Duct
Lower Instrument
Panel
Center Bracket
G
Switch
Door
G
No. 2 Box
No. 1 Box
G
T
Ultrasonic welding parts
H13320

HINT:
Screw shapes and sizes are indicated in the table below. The codes (”A” - ”K”) correspond to those indicated on the previous pages.

mm (in.)

	Shape	Size		Shape	Size		Shape	Size
Ⓐ	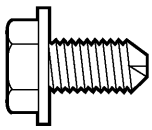	ø = 8 (0.31) L = 15 (0.59)	Ⓑ	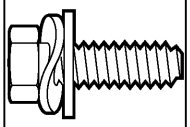	ø = 6 (0.24) L = 22 (0.87)	Ⓒ	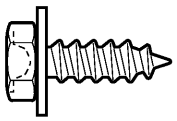	ø = 6 (0.24) L = 19 (0.75)
Ⓓ	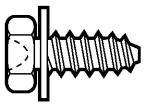	ø = 6 (0.24) L = 18 (0.71)	Ⓔ	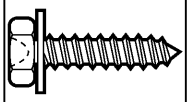	ø = 5 (0.20) L = 25 (0.98)	Ⓕ	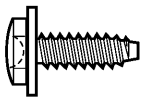	ø = 5 (0.20) L = 16 (0.63)
Ⓖ	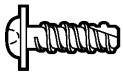	ø = 5 (0.20) L = 14 (0.55)	Ⓗ		ø = 5 (0.20) L = 14 (0.55)	Ⓘ		ø = 4 (0.16) L = 14 (0.55)
Ⓙ	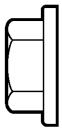	ø = 8 (0.31)	Ⓚ	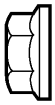	ø = 6 (0.24)			

T

H11054

BO2H6-02

DISASSEMBLY

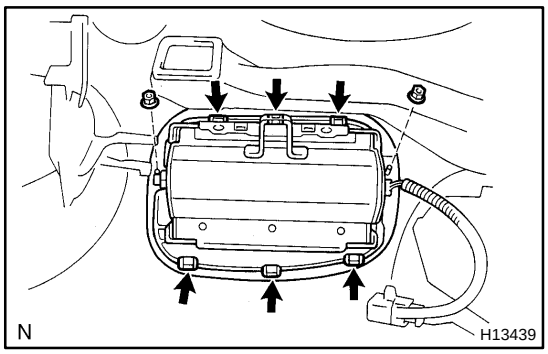

1. REMOVE FRONT PASSENGER AIRBAG ASSEMBLY

(a) Remove the 2 nuts holding the front passenger airbag assembly to the instrument panel.

(b) Pry up the 6 clips shown in the illustration.

(c) Remove the front passenger airbag assembly from the instrument panel.

CAUTION:

- **Do not store the front passenger airbag assembly with the airbag deployment side facing down.**
- **Never disassemble the front passenger airbag assembly.**

NOTICE:

When removing the front passenger airbag assembly, take care not to damage the wire harness.

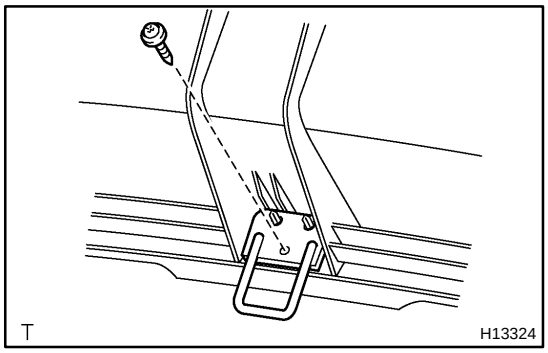

2. REMOVE CENTER BRACKET

Remove the screw and center bracket.

3. REMOVE DOOR

4. REMOVE NO. 2 BOX

Remove the 2 screws and No. 2 box.

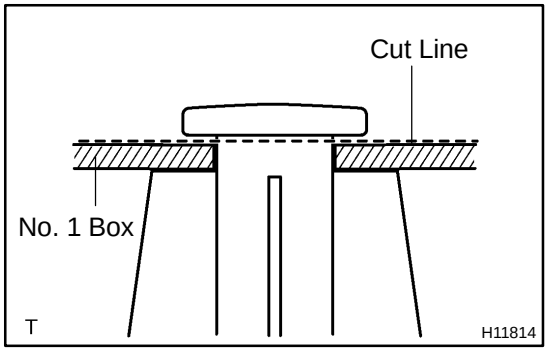

5. REMOVE NO. 1 BOX

(a) When installed by ultrasonic welding:
Using a nipper, cut off the ultrasonic welding portion of the instrument panel along the No. 1 box to remove the No. 1 box from the instrument panel lower.

(b) When installed with screw:
Remove the screw and No. 1 box from the instrument panel lower.

6. REMOVE REGISTERS

7. REMOVE NO. 1, NO. 2 AND NO. 3 HEATER TO REGISTER DUCT

HINT:

For step 6 and 7, remove them in the same way as No.1 box.

BO2H8-01

INSTALLATION

Installation is in the reverse order of removal (See page BO-76).

BO2UG-03

REASSEMBLY

NOTICE:

Never use airbag parts from another vehicle. When replacing parts, replace them with new parts.

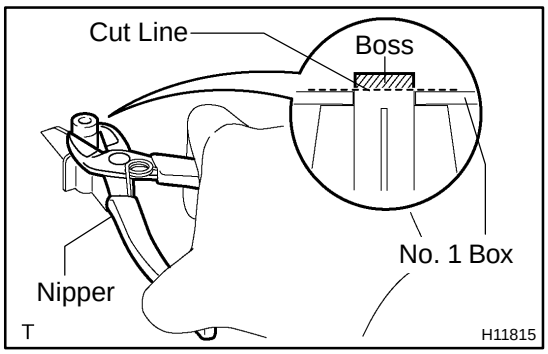

1. When replacing instrument panel lower:
INSTALL NO. 1 BOX

(a) Cut off the boss using a nipper to make the level of the surface equal to the No. 1 box.

NOTICE:

Ensure that the cut surface is flush with the surface of No. 1 box to prevent looseness.

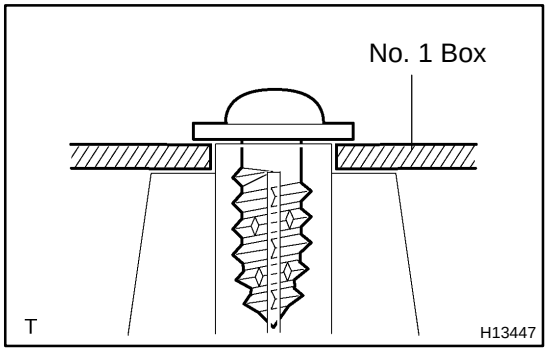

(b) Install the No. 1 box securely on the instrument panel with the tapping screw provided in the same packing.

HINT:

Use the same manner to instrument panel upper.

2. When reusing instrument panel lower:
INSTALL NO. 1 BOX

Install the No. 1 box to the instrument panel lower with the screw.

3. INSTALL NO. 1, NO. 2 AND NO. 3 HEATER TO REGISTER DUCT

4. INSTALL NO. 1 AND NO. 2 SIDE DEFROSTER NOZZLE DUCT

5. INSTALL REGISTERS

HINT:

For step 2 and 3, install them in the same way as No. 1 box.

6. INSTALL NO. 2 BOX

Install the No. 2 box with the 2 screws.

7. INSTALL DOOR

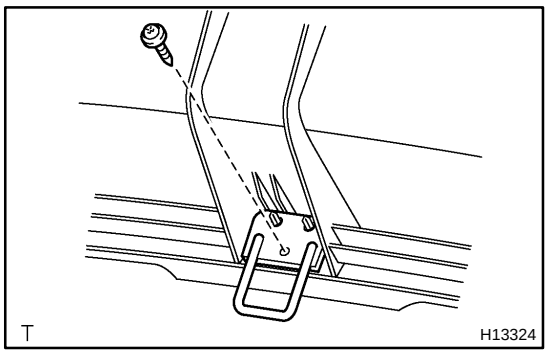

8. INSTALL CENTER BRACKET

Install the center bracket with the screw.

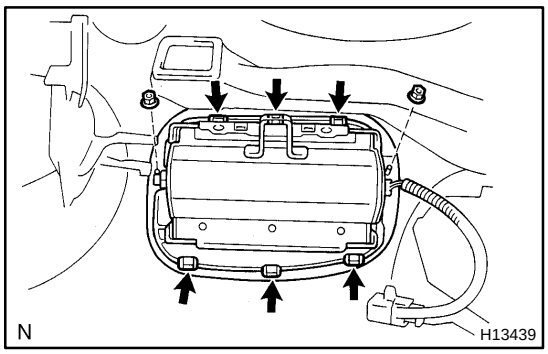

9. INSTALL FRONT PASSENGER AIRBAG ASSEMBLY

(a) Install the front passenger airbag assembly to the instrument panel.

(b) Install the 2 nuts.

NOTICE:

If the front passenger airbag assembly has been dropped, or there are cracks, dents or other defects in the case or connector, replace the front passenger airbag assembly withe a new one.

BO2H5-04

REMOVAL

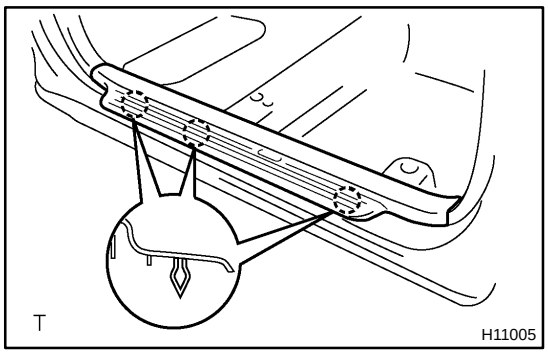

1. REMOVE FRONT DOOR SCUFF PLATE

(a) Insert a screwdriver between the front door scuff plate and body to pry it out.

HINT:

Tape the screwdriver tip before use.

(b) Use the same manner described above to the other side.

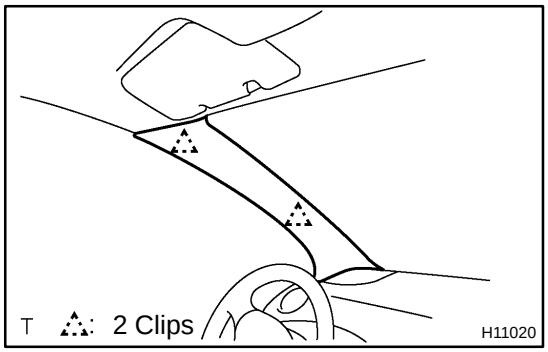

2. REMOVE FRONT PILLAR GARNISHES

(a) Insert a screwdriver between the front pillar garnish and body to pry it out.

HINT:

Tape the screwdriver tip before use.

(b) Use the same manner described above to the other side.

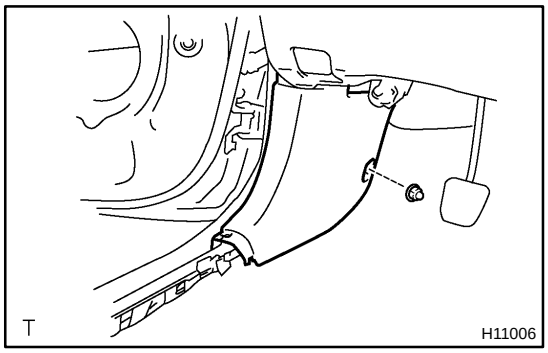

3. REMOVE COWL SIDE TRIM BOARD

(a) Remove the clip.

(b) Insert a screwdriver between the cowl side trim board and body to pry it out.

HINT:

Tape the screwdriver tip before use.

(c) Use the same manner described above to the other side.

4. REMOVE STEERING WHEEL PAD (See page SR-13)

5. REMOVE STEERING WHEEL (See page SR-13)

6. REMOVE COLUMN UPPER AND LOWER COVER (See page SR-13)

7. REMOVE SPIRAL CABLE (See page SR-13)

8. REMOVE WIPER AND WASHER SWITCH

9. REMOVE LIGHT CONTROL SWITCH AND HEADLIGHT DIMMER SWITCH

10. REMOVE PANEL

Remove the clip and panel.

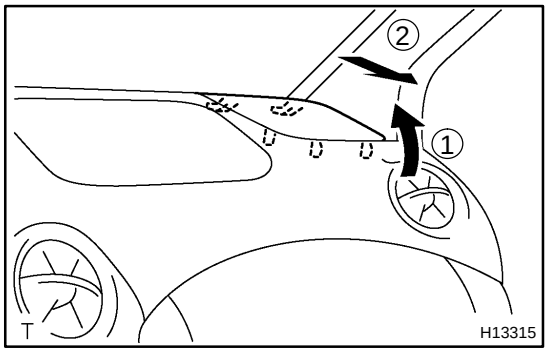

11. REMOVE NO. 1 SPEAKER PANEL AND NO. 2 SPEAKER PANEL

(a) Remove the No. 2 speaker panel as shown in the illustration.

(b) Use the same manner described above to the No. 1 speaker panel.

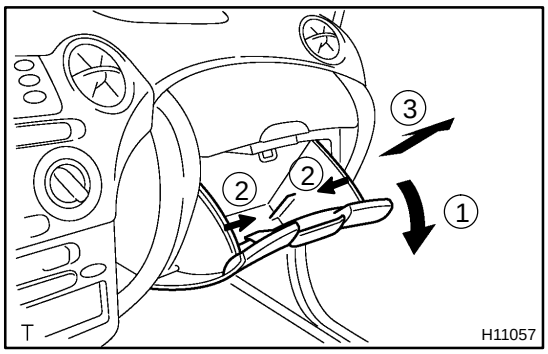

12. REMOVE GLOVE COMPARTMENT DOOR

(a) Open the glove compartment door.

(b) Push both sides in and pull off the glove compartment door.

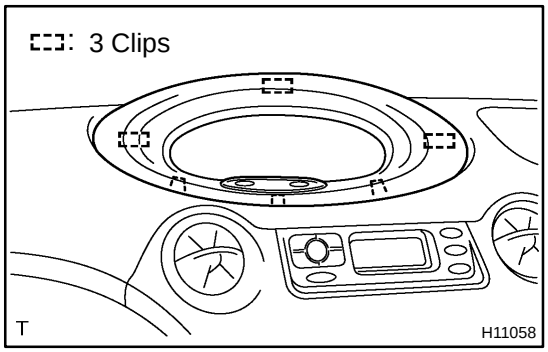

13. REMOVE UPPER CLUSTER FINISH PANEL

(a) Using a screwdriver, remove the upper cluster finish panel as shown in the illustration.

HINT:

Tape the screwdriver tip before use.

(b) Disconnect the connector.

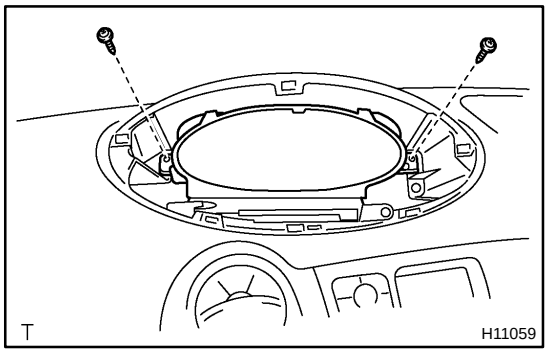

14. REMOVE METER

(a) Remove the 2 screws.

(b) Disconnect the connectors, then remove the meter.

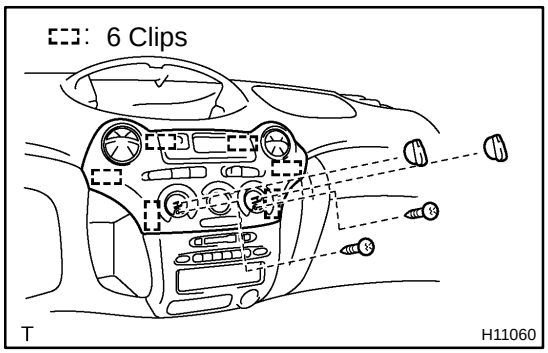

15. REMOVE CLUSTER FINISH PANEL

(a) Remove the 2 knobs.

(b) Remove the 2 screws.

(c) Using a screwdriver, remove the cluster finish panel.

HINT:

Tape the screwdriver tip before use.

(d) Disconnect the connectors.

(e) w/ Multi display:
Remove the 2 screws and multi display.

(f) w/o Multi display:
Remove the 2 screws stereo opening cover.

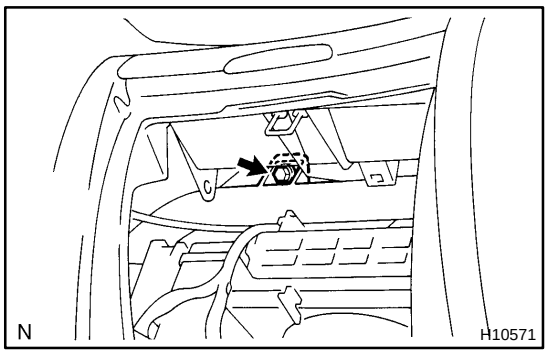

16. REMOVE INSTRUMENT PANEL

(a) Remove the bolt holding to the front passenger airbag assembly to the body.

Torque: 18 N·m (185 kgf·cm, 13 ft·lbf)

NOTICE:

If the wiring connector of the SRS is disconnected when the ignition switch is in ON or ACC position, DTC will be recorded.

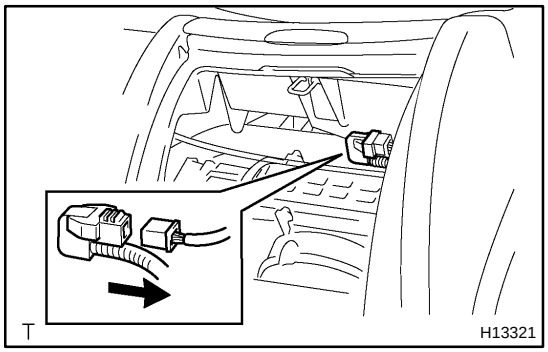

(b) Remove the connector cover from the lower instrument panel.

NOTICE:

When handling the airbag connector, take care not to damage the airbag wire harness.

(c) Disconnect the passenger airbag connector.

(d) Remove the screws and instrument panel as shown in the installation below.

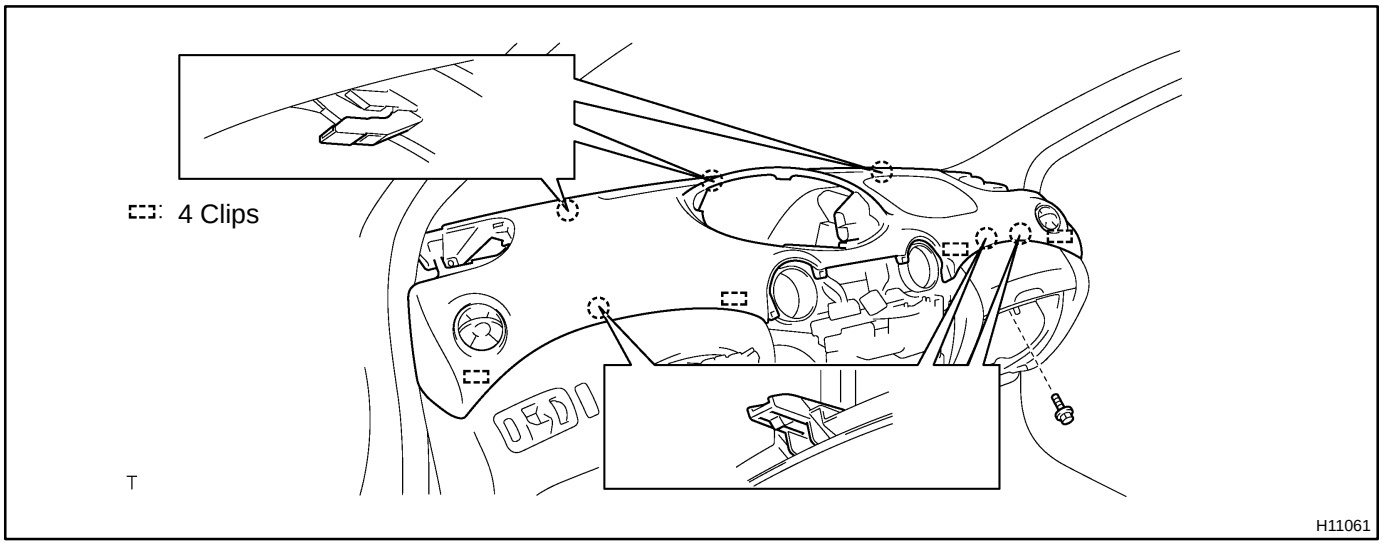

17. REMOVE DEFROSTER NOZZLE

18. REMOVE FRONT ASH RECEPTACLE BOX

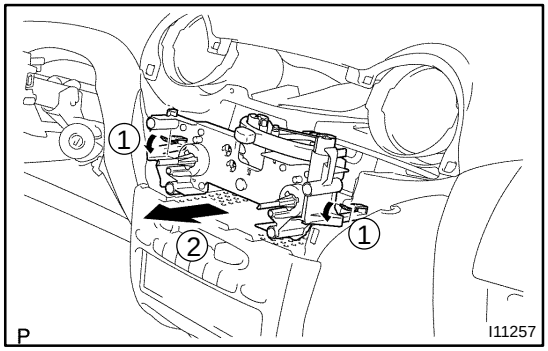

19. REMOVE HEATER CONTROL ASSEMBLY
(See page AC-80)

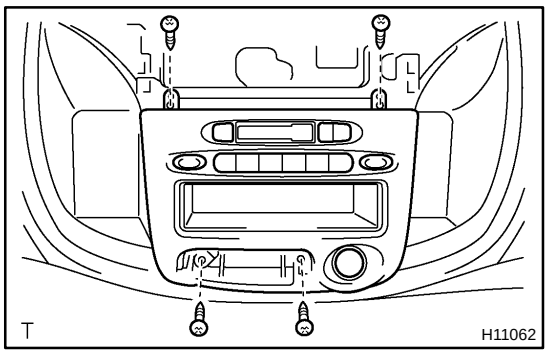

20. REMOVE RADIO ASSEMBLY

(a) Remove the 4 screws.

(b) Disconnect the connectors, then remove the radio assembly.

21. REMOVE LOWER INSTRUMENT PANEL

(a) Remove the hood lock release lever.

(b) Remove the screws, bolts and nuts.

(c) Disconnect the connectors.

(d) Remove the lower instrument panel.

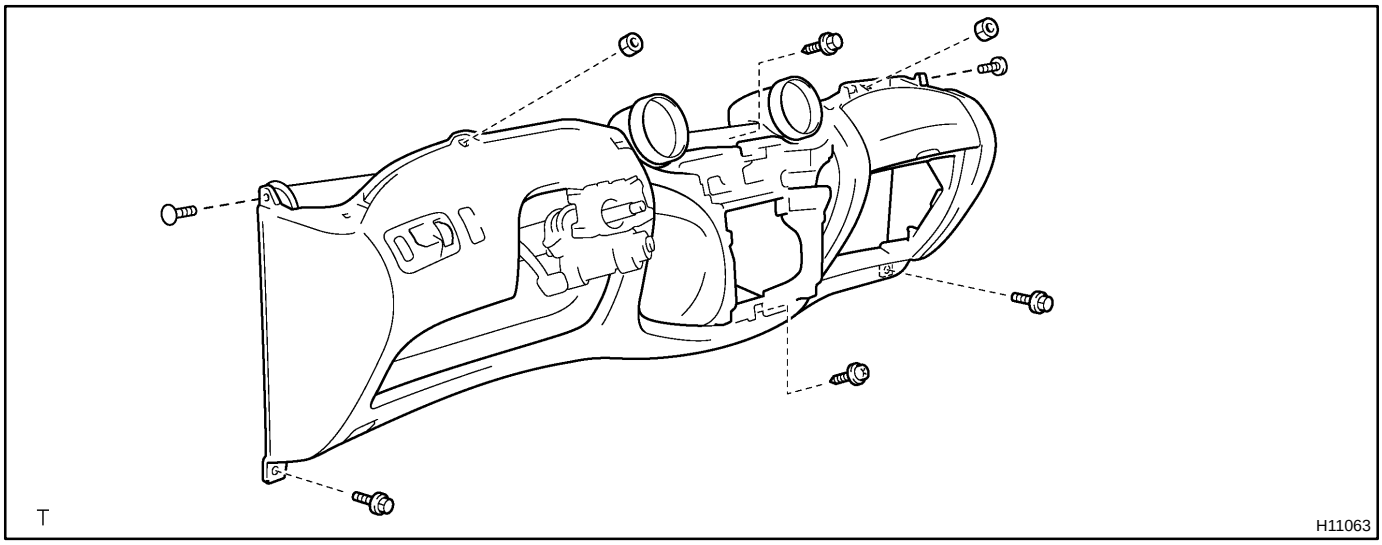

22. REMOVE LOWER PAD INSERT

Remove the bolt, 2 nuts and lower pad insert.

23. REMOVE STEERING COLUMN (See page SR-13)

24. REMOVE REAR CONSOLE BOX

(a) Remove the shifting hole cover.

(b) Disconnect the connector of the base switch.

(c) Remove the console carpet.

(d) Remove the screw and rear console box.

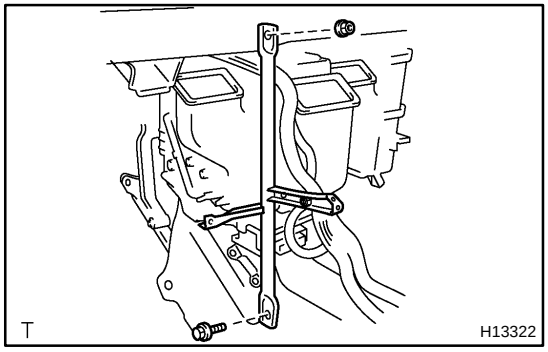

25. REMOVE INSTRUMENT PANEL TO FLOOR BRACE

Remove the bolt and nut, then remove the instrument panel to floor brace.

26. REMOVE REINFORCEMENT

(a) Remove the 6 bolts.

(b) Disengage the wire harness clamps.

(c) Remove the reinforcement.

NOTICE:

Be careful not to damage the body and wire harness.

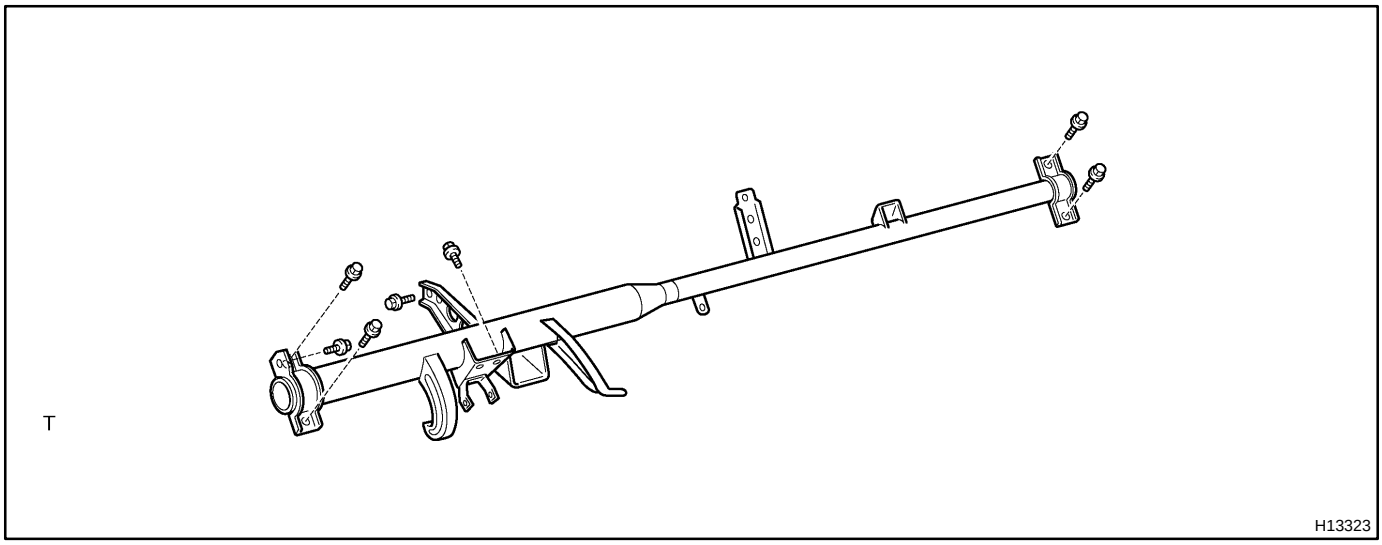

(d) Remove the screw and door lock control.

(e) Remove the screw and wireless door lock control.

BO2U7-02

ADJUSTMENT

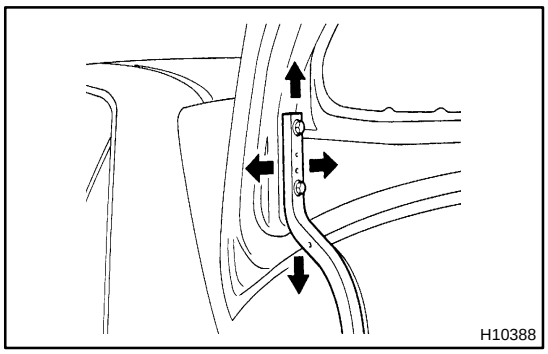

1. ADJUST LUGGAGE COMPARTMENT DOOR

(a) For forward / rearward and left / right adjustments loosen the bolts.

(b) For vertical adjustment of front end of the door, increase or decrease the number of washers between the hinge and the door.

(c) Tighten the bolts again.
Torque: 8.3 N·m (85 kgf·cm, 74 in.·lbf)

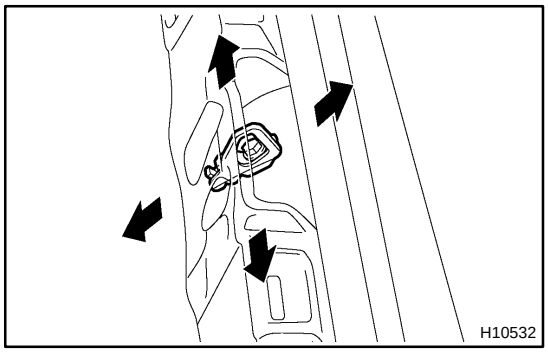

2. ADJUST DOOR LOCK STRIKER

(a) Loosen the 2 bolts.

(b) Using a hammer and brass bar, tap the striker to adjust it.

(c) Tighten the 2 bolts again.
Torque: 4.9 N·m (50 kgf·cm, 43 in.·lbf)

LUGGAGE COMPARTMENT DOOR AND HINGE

COMPONENTS

BO2U6-02

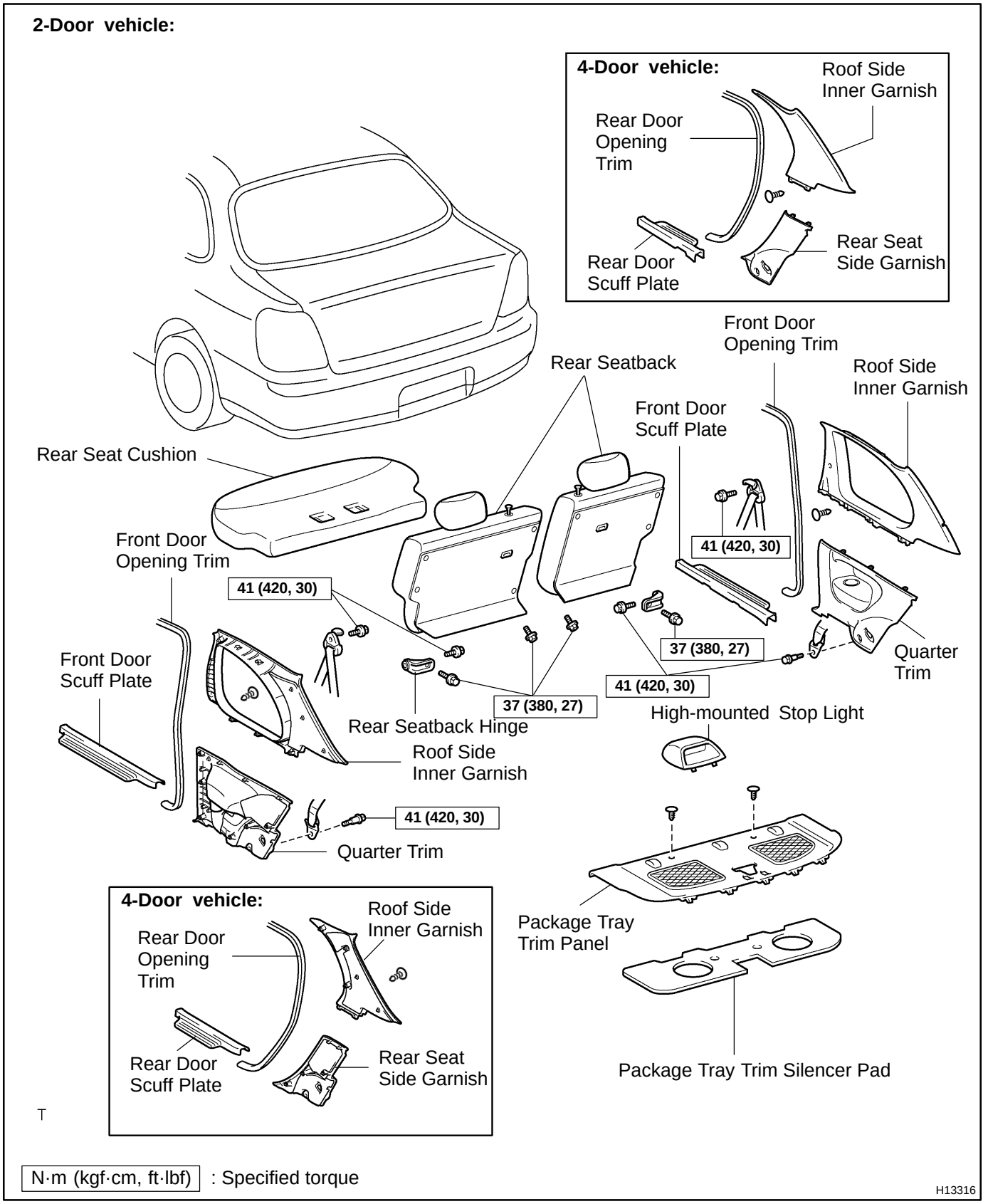

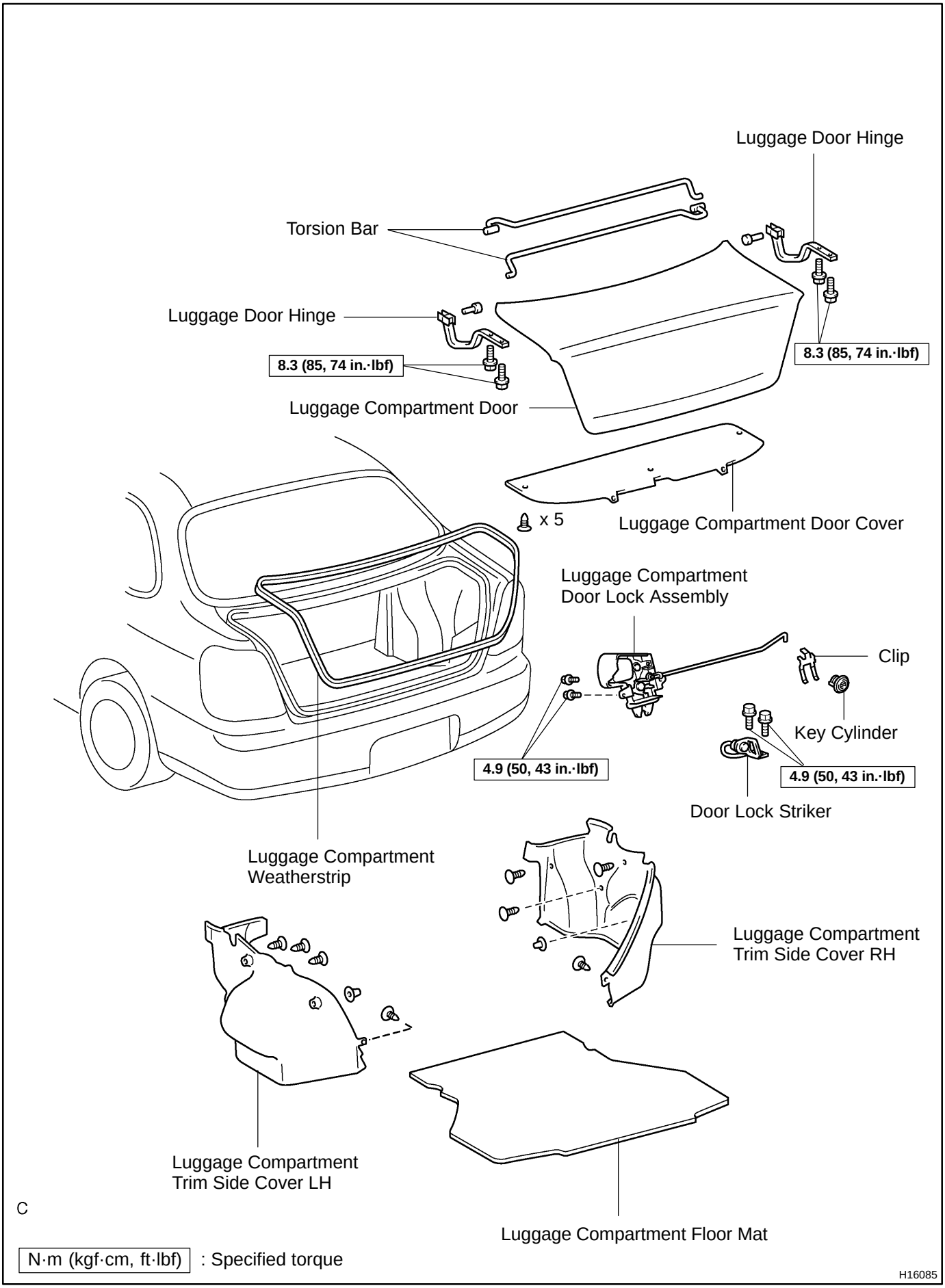
Luggage Door Hinge
Torsion Bar
Luggage Door Hinge
8.3 (85, 74 in.·lbf)
8.3 (85, 74 in.·lbf)
Luggage Compartment Door
x 5
Luggage Compartment Door Cover
Luggage Compartment
Door Lock Assembly
Clip
Key Cylinder
4.9 (50, 43 in.·lbf)
4.9 (50, 43 in.·lbf)
Door Lock Striker
Luggage Compartment
Weatherstrip
Luggage Compartment
Trim Side Cover RH
Luggage Compartment
Trim Side Cover LH
Luggage Compartment Floor Mat
C
N·m (kgf·cm, ft·lbf) : Specified torque
H16085

BO0XG-01

INSTALLATION

Installation is in the reverse order of removal (See page BO-24).

BO2CD-04

REMOVAL

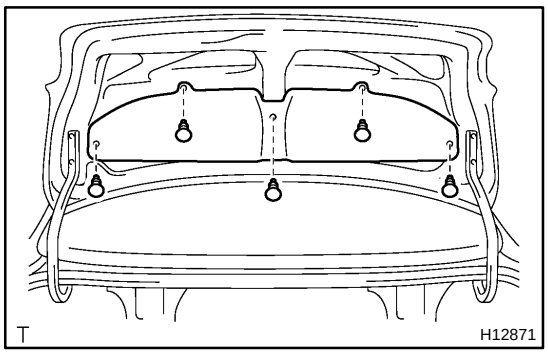

1. REMOVE LUGGAGE COMPARTMENT DOOR COVER

Remove the 5 clips and luggage compartment door cover.

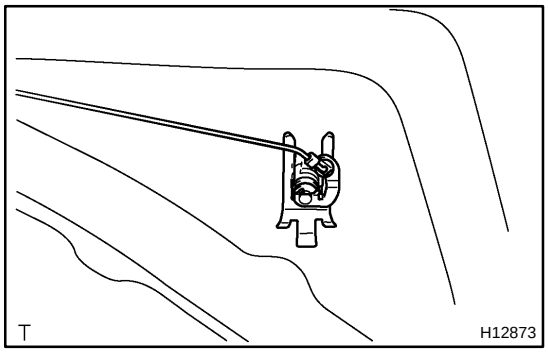

2. REMOVE KEY CYLINDER

(a) Disconnect the link.

(b) Remove the clip and key cylinder.

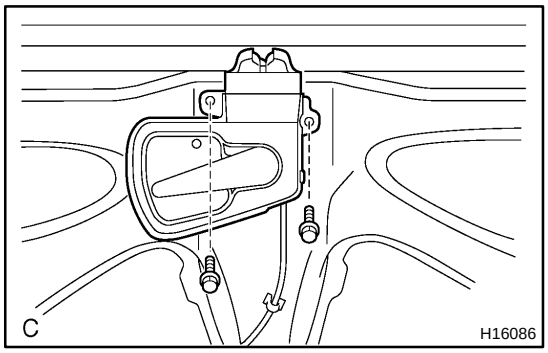

3. REMOVE LUGGAGE COMPARTMENT DOOR LOCK ASSEMBLY

(a) Remove the 2 bolts and luggage compartment door lock assembly.

Torque: 4.9 N·m (50 kgf·cm, 43 in.·lbf)

(b) Disconnect the cable.

4. REMOVE LUGGAGE COMPARTMENT DOOR

Remove the 4 bolts and door.

Torque: 8.3 N·m (85 kgf·cm, 74 in.·lbf)

5. REMOVE LUGGAGE COMPARTMENT FLOOR MAT

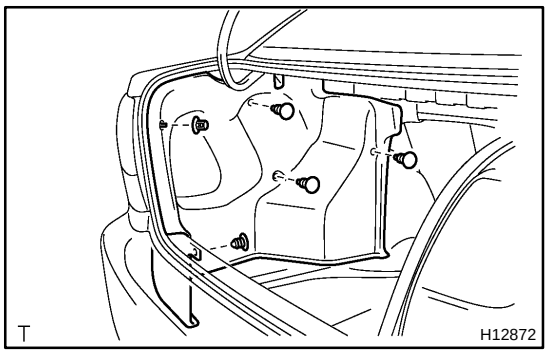

6. REMOVE LUGGAGE COMPARTMENT TRIM SIDE COVERS

(a) Remove the 5 clips and luggage compartment trim side cover.

(b) Use the same manner described above to the other side.

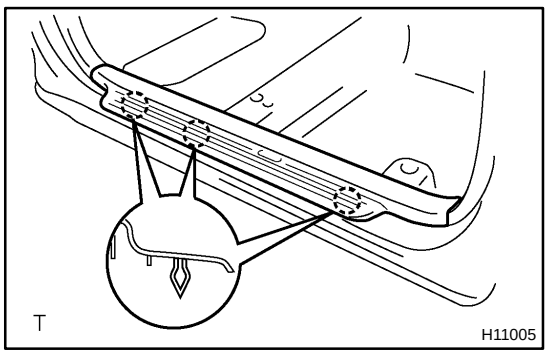

7. 2-Door vehicle:
REMOVE FRONT DOOR SCUFF PLATE

(a) Insert a screwdriver between the front door scuff plate and body to pry it out.

HINT:

Tape the screwdriver tip before use.

(b) Use the same manner described above to the other side.

8. 2-Door vehicle:
REMOVE FRONT DOOR OPENING TRIMS

Remove the front door opening trims except cowl side trim part.

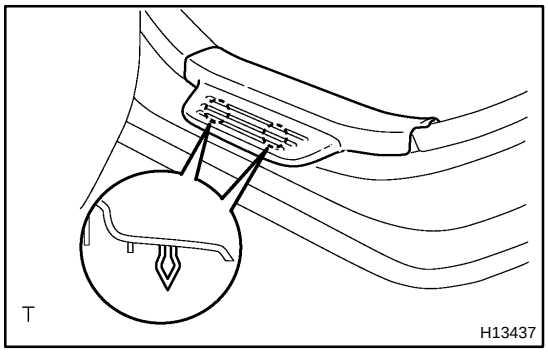

9. 4-Door vehicle:
REMOVE REAR DOOR SCUFF PLATE

(a) Insert a screwdriver between the rear door scuff plate and body to pry it out.

HINT:

Tape the screwdriver tip before use.

(b) Use the same manner described above to the other side.

10. 4-Door vehicle:
REMOVE REAR DOOR OPENING TRIMS

11. REMOVE REAR SEAT CUSHION
(See page BO-101 or BO-106)

12. REMOVE REAR SEATBACK
(See page BO-101 or BO-106)

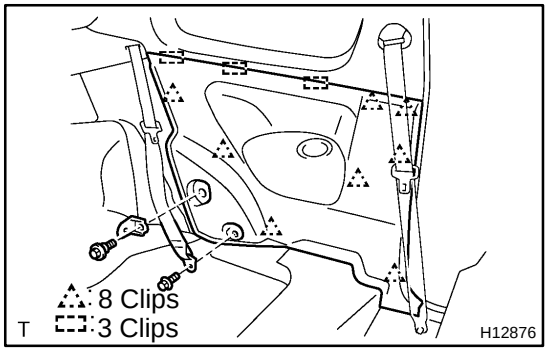

13. 2-Door vehicle:
REMOVE QUARTER TRIM

(a) Remove the bolt and rear seat outer belt floor anchor.
Torque: 41 N·m (420 kgf·cm, 30 ft·lbf)

(b) w/ Split type rear seat:
Remove the bolt and rear seatback hinge.
Torque: 37 N·m (380 kgf·cm, 27 ft·lbf)

(c) Insert a screwdriver between the quarter trim and body to pry it out.

HINT:

Tape the screwdriver tip before use.

(d) Use the same manner described above to the other side.

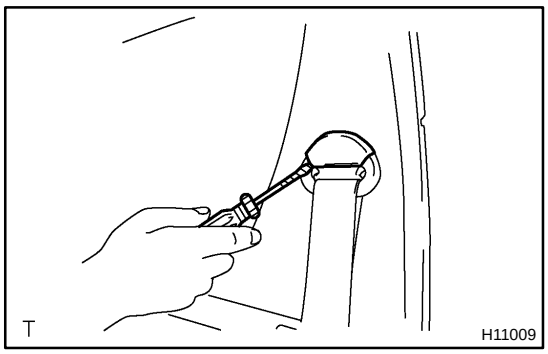

14. 2-Door vehicle:
REMOVE ROOF SIDE INNER GARNISH

(a) Using a screwdriver, open the seat belt shoulder anchor cover cap.

HINT:

Tape the screwdriver tip before use.

(b) Remove the bolt and front seat outer belt shoulder anchor.
Torque: 41 N·m (420 kgf·cm, 30 ft·lbf)

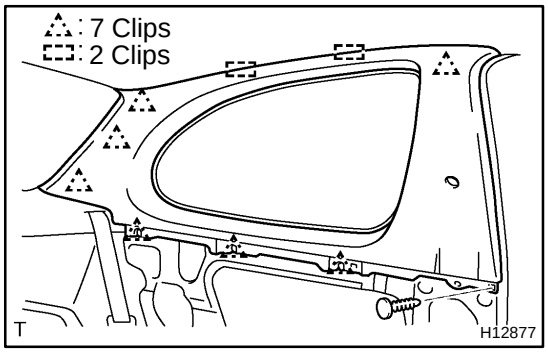

(c) Remove the clip.

(d) Insert a screwdriver between the roof side inner garnish and body to pry it out.

HINT:

Tape the screwdriver tip before use.

(e) Use the same manner described above to the other side.

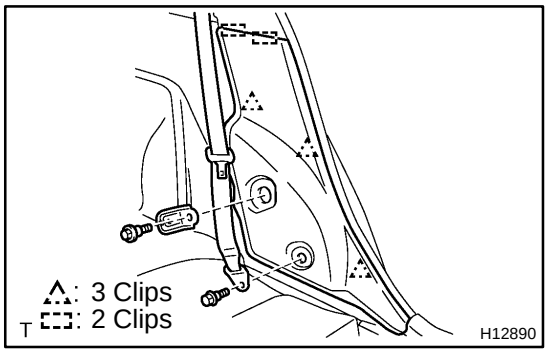

15. 4-Door vehicle:
REMOVE REAR SEAT SIDE GARNISH

(a) Remove the bolt and rear seat outer belt floor anchor.
Torque: 41 N·m (420 kgf·cm, 30 ft·lbf)

(b) w/ Split type rear seat:
Remove the bolt and rear seatback hinge.
Torque: 41 N·m (420 kgf·cm, 30 ft·lbf)

(c) Using a screwdriver, remove the rear seat side garnish.

HINT:

Tape the screwdriver tip before use.

(d) Use the same manner described above to the other side.

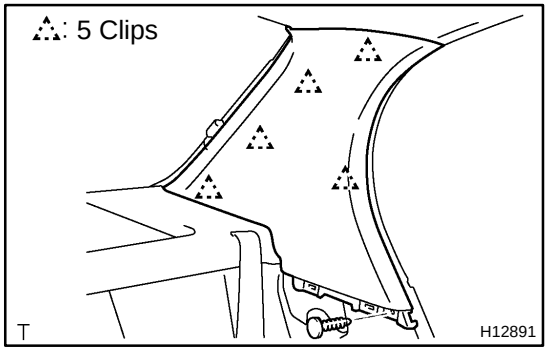

16. 4-Door vehicle:
REMOVE ROOF SIDE INNER GARNISH

(a) Remove the clip.

(b) Insert a screwdriver between the roof side inner garnish and body to pry it out.

HINT:

Tape the screwdriver tip before use.

(c) Use the same manner described above to the other side.

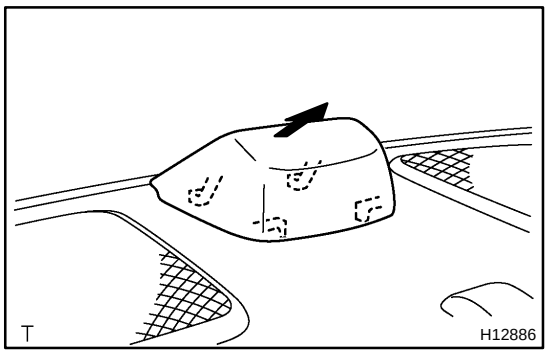

17. REMOVE HIGH-MOUNTED STOP LIGHT

(a) Remove the high-mounted stop light as shown in the illustration.

(b) Disconnect the connector.

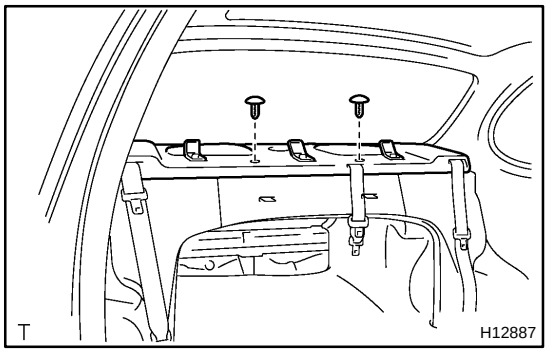

18. REMOVE PACKAGE TRAY TRIM PANEL

(a) Remove the 2 clips.

(b) Remove the rear seat belts through the cutout on the package tray trim.

(c) Pull the package tray trim panel forward to remove it.

19. REMOVE PACKAGE TRAY TRIM SILENCER PAD

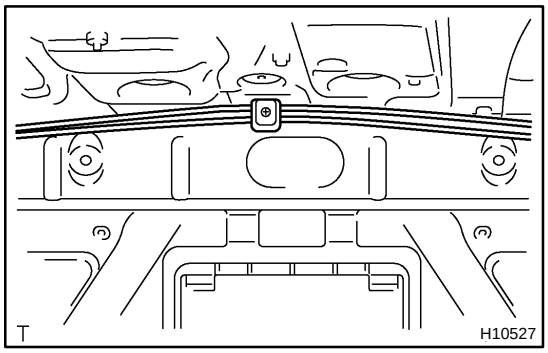

20. REMOVE TORSION BAR

(a) Remove the torsion bars from the center bracket.

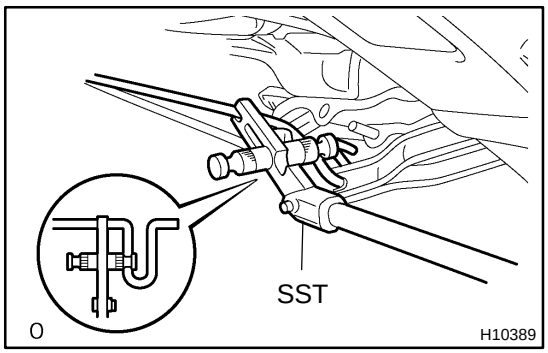

(b) Install SST to the torsion bar on the hinge side.
SST 09804-24010

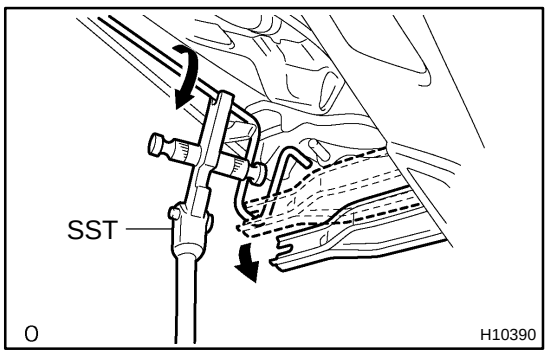

(c) Push down on SST, and pull the luggage compartment door hinge from the torsion bar.

(d) Slowly lift SST, and remove the torsion bar from the torsion bar bracket with SST.

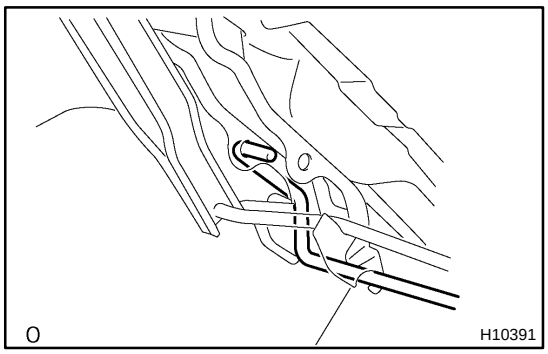

(e) Disconnect the torsion bar from the bracket.
(f) Use the same manner described above to the other side.

21. REMOVE LUGGAGE COMPARTMENT DOOR HINGE

(a) Remove the pin.
(b) Remove the hinge.
(c) Use the same manner described above to the other side.

22. REMOVE LUGGAGE COMPARTMENT WEATHERSTRIP

QUARTER WINDOW GLASS

COMPONENTS

BO2GR-03

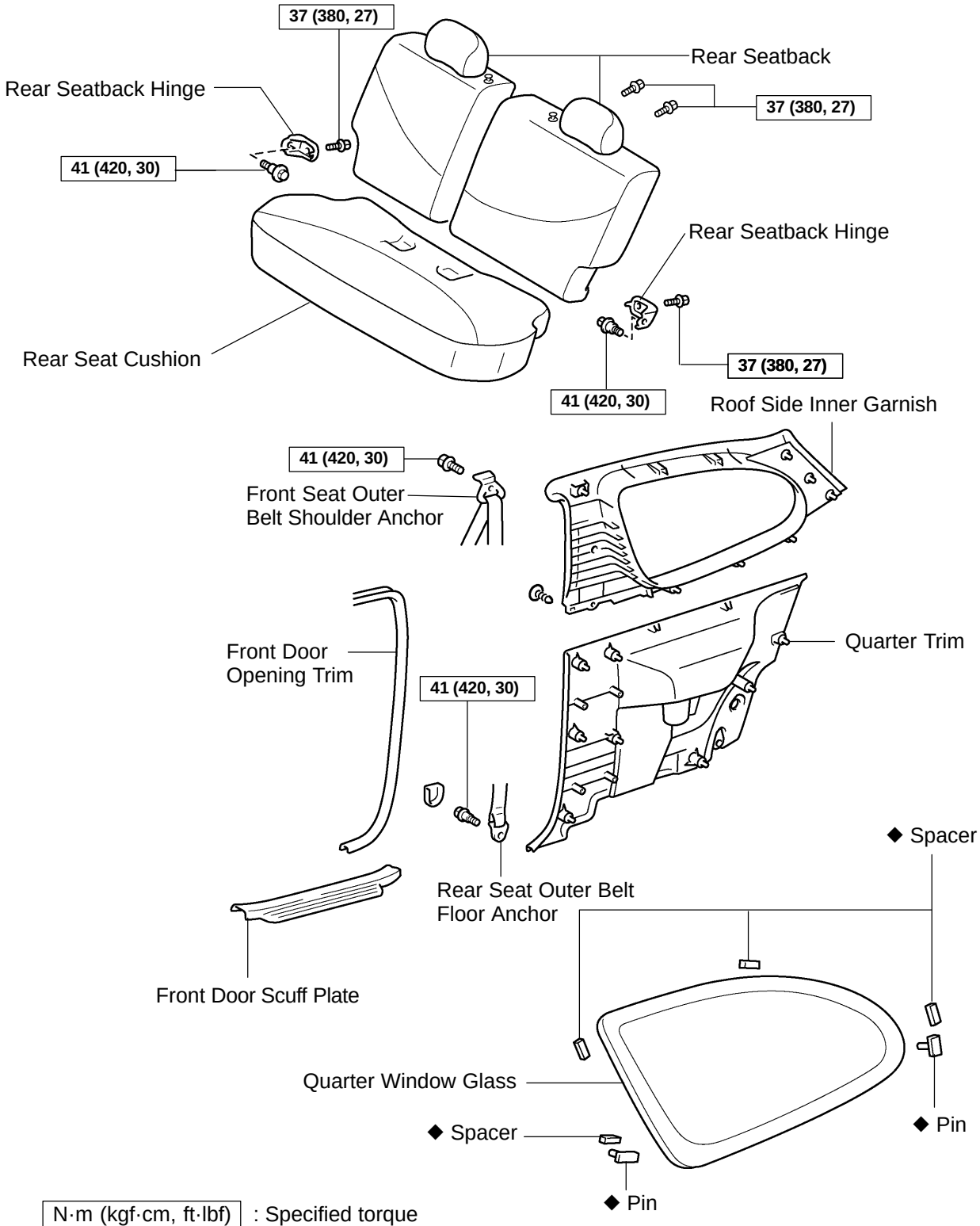

BO2UD-01

INSTALLATION

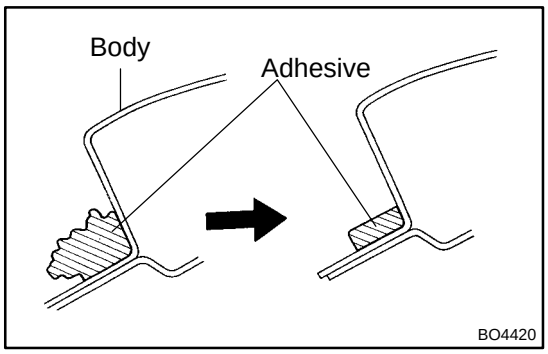

1. CLEAN AND SHAPE CONTACT SURFACE OF BODY PANEL

(a) Using a knife, cut away any rough areas on the body.

HINT:

Leave as much of the adhesive on the body as possible.

(b) Clean the cutting surface of the adhesive with a piece of shop rag saturated in cleaner.

HINT:

Even if all the adhesive has been removed, clean the body.

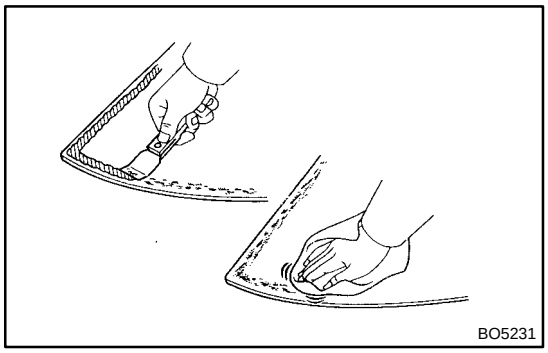

2. CLEAN REMOVED GLASS

(a) Remove the damaged spacers and pins.

(b) Using a scraper, remove the adhesive sticking to the glass.

(c) Clean the glass with a cleaner.

NOTICE:

- **Do not touch the glass after cleaning it.**
- **Be careful not to damage the glass.**

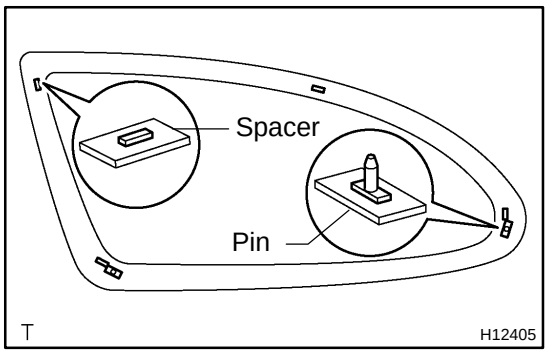

3. INSTALL NEW SPACERS AND PINS

(a) Once place new pins and spacers to the body.

(b) Peel the release sheets from adhesive tapes.

(c) Position the glass in correct position.

(d) Remove the glass with the spacers and pins.

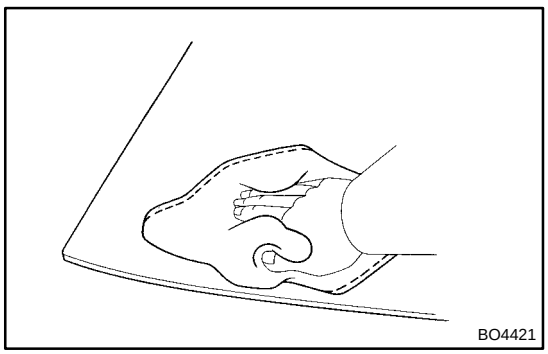

4. CLEAN CONTACT SURFACE OF GLASS

Using a cleaner, clean the contact surface which is black-colored area around the entire glass rim.

NOTICE:

Do not touch the glass face after cleaning it.

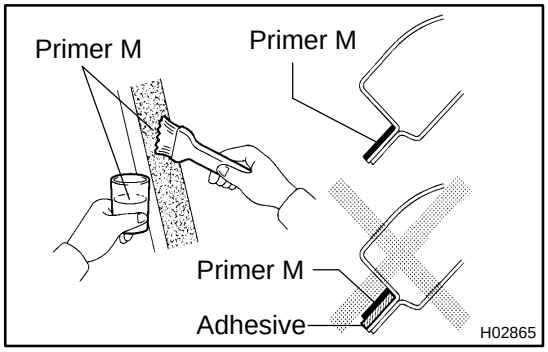

5. COAT CONTACT SURFACE OF BODY WITH PRIMER "M"

Using a brush, coat Primer M to the exposed part of body on the vehicle side.

NOTICE:

- **Let the primer coating dry for 3 minutes or more.**
- **Do not coat Primer M to the adhesive.**
- **Do not keep any of the opened Primer M for later use.**

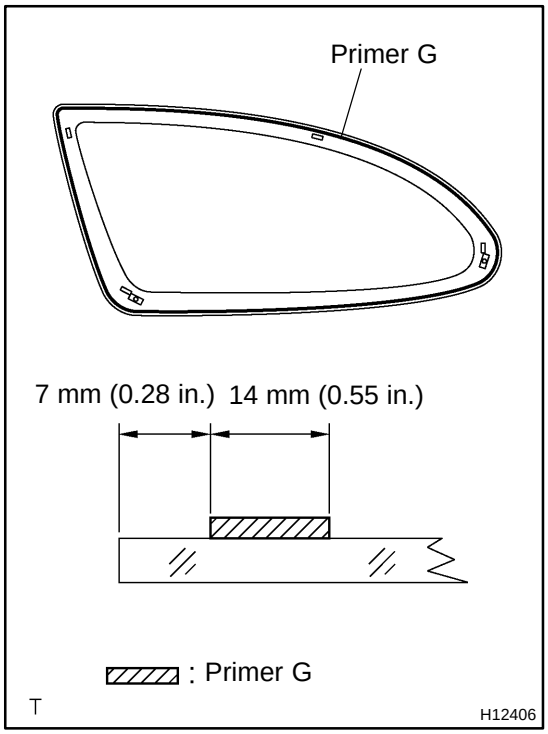

6. COAT CONTACT SURFACE OF NEW GLASS WITH PRIMER "G"

(a) Using a brush or sponge, coat the edge of the glass and the contact surface with Primer G as shown in the illustration.

(b) When the primer is coated wrongly to the area other than the specified, wipe it off with a clean shop rag before the primer dries.

NOTICE:

- **Let the primer coating dry for 3 minutes or more.**
- **Do not keep any of the opened Primer G for later use.**

7. APPLY ADHESIVE

(a) Cut off the tip of the cartridge nozzle.
Part No. 08850-00801 or equivalent

HINT:

After cutting off the tip, use all adhesive within the time described in the table below.

Temperature	Tackfree time
35˚C (95˚F)	15 minutes
20˚C (68˚F)	100 minutes
5˚C (41˚F)	8 hours

(b) Load the cartridge into the sealer gun.

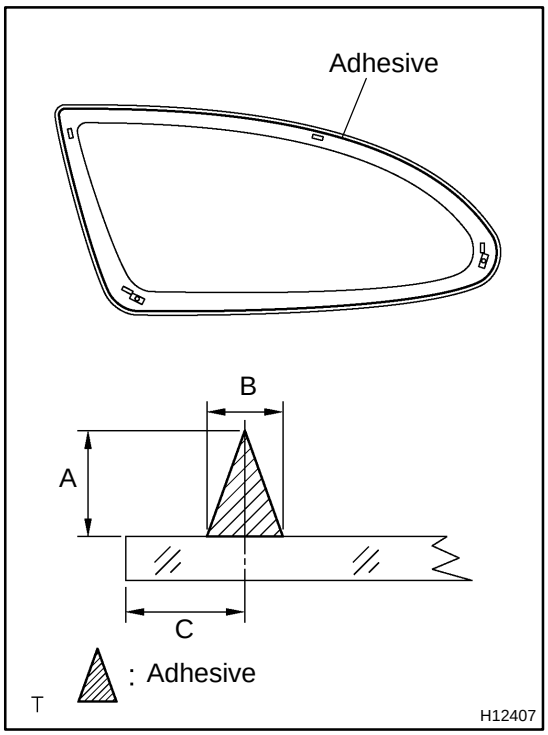

(c) Coat the glass with adhesive as shown in the illustration.
A: 12.0 mm (0.472 in.)
B: 8.0 mm (0.315 in.)
C: 14.0 mm (0.551 in.)

8. INSTALL GLASS

(a) Install the glass to the body.

(b) Hold the glass in place securely with the protective tape or equivalent until the adhesive hardens.

NOTICE:

Take care not to drive the vehicle during the time described in the table below.

Temperature	Minimum time prior to driving the vehicle
35˚C (95˚F)	1.5 hours
20˚C (68˚F)	5 hours
5˚C (41˚F)	24 hours

9. INSPECT FOR LEAKS AND REPAIR

NOTICE:

Conduct a leak test after the hardening time has elapsed.

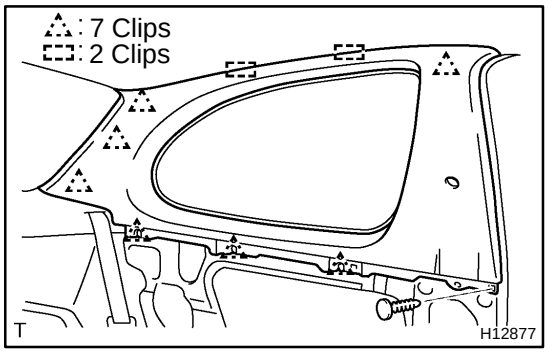

10. INSTALL ROOF SIDE INNER GARNISH

(a) Install the roof side inner garnish to the body.

(b) Install the clip.

(c) Install the front seat outer belt shoulder anchor with the bolt.
Torque: 41 N·m (420 kgf·cm, 30 ft·lbf)

(d) Close the seat belt shoulder anchor cover cap.

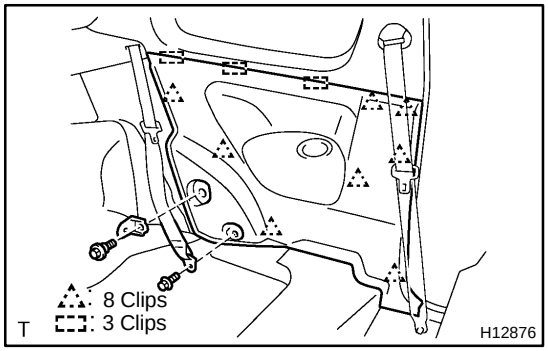

11. INSTALL QUARTER TRIM

(a) Install the quarter trim to the body.

(b) w/ Split type rear seat:
Install the rear seatback hinge with the bolt.
Torque: 41 N·m (420 kgf·cm, 30 ft·lbf)

(c) Install the rear seat outer belt floor anchor with the bolt.
Torque: 41 N·m (420 kgf·cm, 30 ft·lbf)

12. INSTALL REAR SEATBACK
(See page BO-104 or BO-109)

13. INSTALL REAR SEAT CUSHION
(See page BO-104 or BO-109)

14. INSTALL FRONT DOOR OPENING TRIM

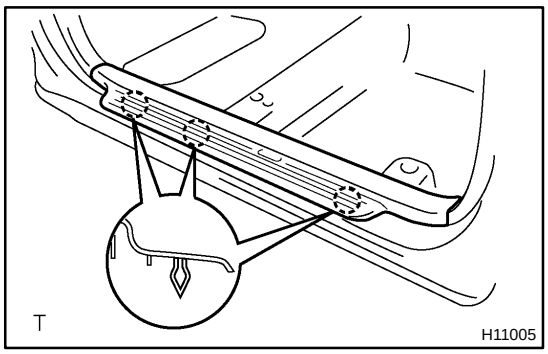

15. INSTALL FRONT DOOR SCUFF PLATE

BO2GS-02

REMOVAL

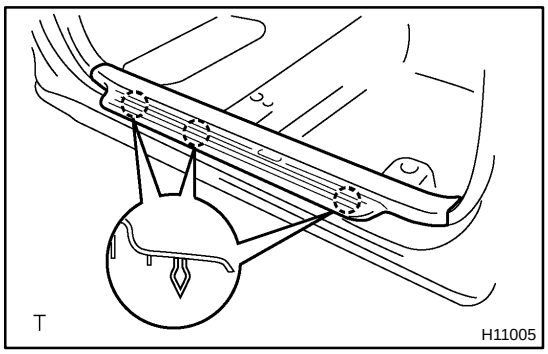

1. REMOVE FRONT DOOR SCUFF PLATE

Insert a screwdriver between the front door scuff plate and body to pry it out.

HINT:

Tape the screwdriver tip before use.

2. REMOVE FRONT DOOR OPENING TRIMS

Remove the front door opening trims except cowl side trim parts.

3. REMOVE REAR SEAT CUSHION

(See page BO-101 or BO-106)

4. REMOVE REAR SEATBACK

(See page BO-101 or BO-106)

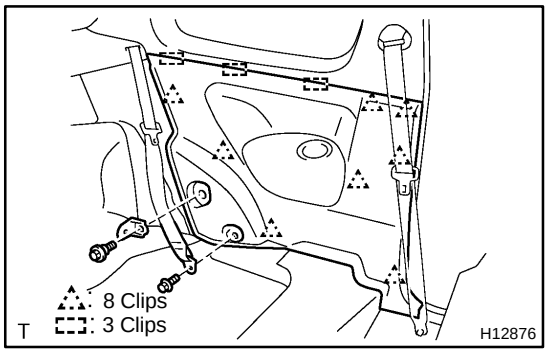

5. REMOVE QUARTER TRIM

(a) Remove the bolt and rear seat outer belt floor anchor.

(b) w/ Split type rear seat:
Remove the bolt and rear seatback hinge.

(c) Insert a screwdriver between the quarter trim and body to pry it out.

HINT:

Tape the screwdriver tip before use.

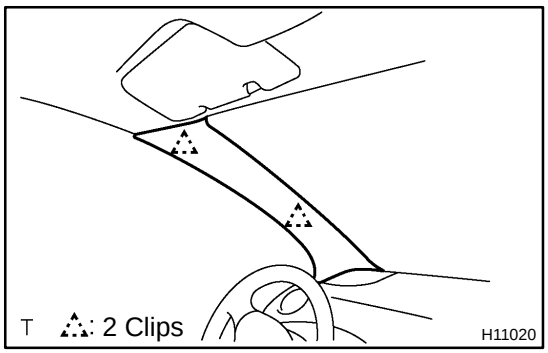

6. REMOVE FRONT PILLAR GARNISH

Using a screwdriver, remove the front pillar garnish.

HINT:

Tape the screwdriver tip before use.

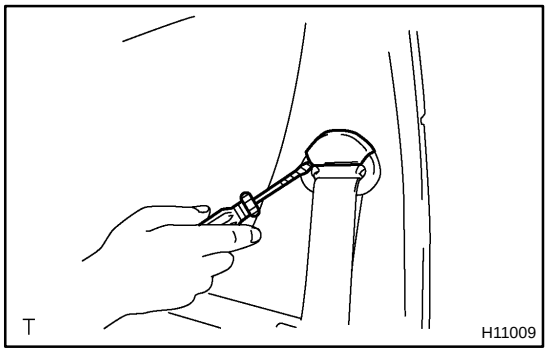

7. REMOVE ROOF SIDE INNER GARNISH

(a) Using a screwdriver, open the seat belt shoulder anchor cover cap.

HINT:

Tape the screwdriver tip before use.

(b) Remove the bolt and front seat outer belt shoulder anchor.

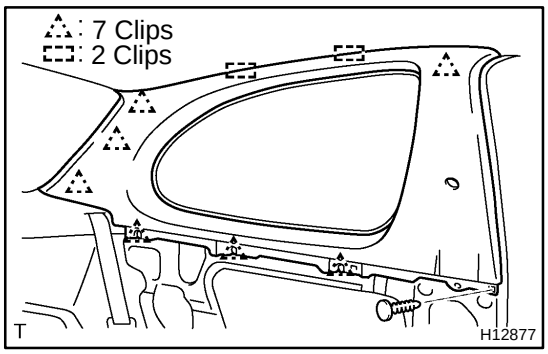

(c) Remove the clip.
(d) Insert a screwdriver between the roof side inner garnish and body to pry it out.

HINT:
Tape the screwdriver tip before use.

8. REMOVE ASSIST GRIP

(a) Using a screwdriver, open the caps.

HINT:
Tape the screwdriver tip before use.

(b) Remove the 2 screws.
(c) Remove the assist grip.

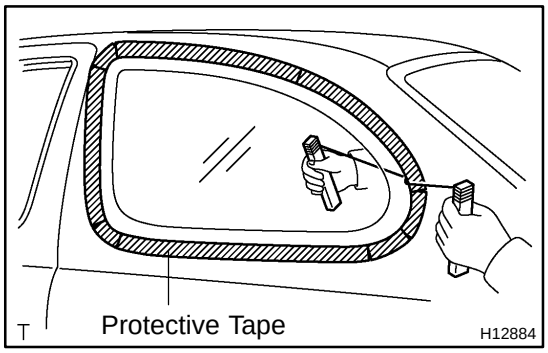

9. REMOVE QUARTER WINDOW GLASS

(a) Push a piano wire through from the interior.
(b) Tie both wire ends to wooden blocks or similar objects.

HINT:
Apply protective tape to the outer surface to keep the surface from being scratched.

NOTICE:
When separating the glass, take care not to damage the paint and exterior.

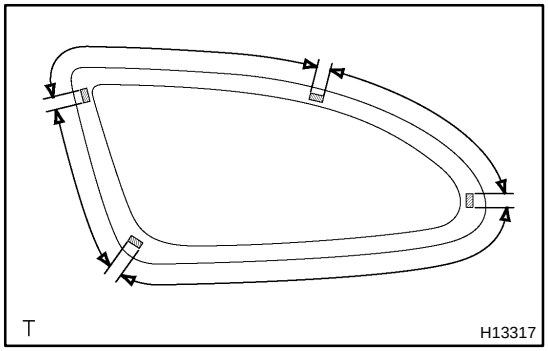

(c) Cut the adhesive by pulling the piano wire around it.

HINT:
Cut the adhesive areas as shown in the illustration, leaving the adhesive where the spacers are.

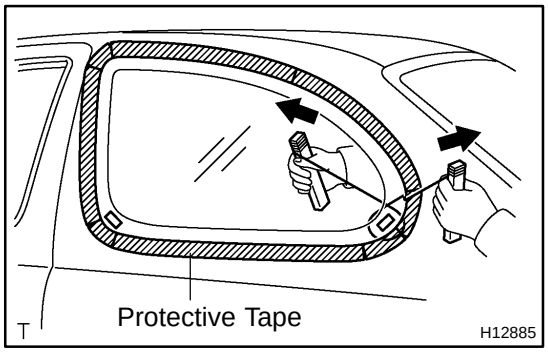

(d) Push the piano wire through as shown in the illustration, cut off the adhered part to the clips.
(e) Remove the glass.

NOTICE:
Leave as much of the adhesive on the body as possible when cutting off the glass.

ROOF DRIP SIDE FINISH MOULDING

BO1K4-03

COMPONENTS

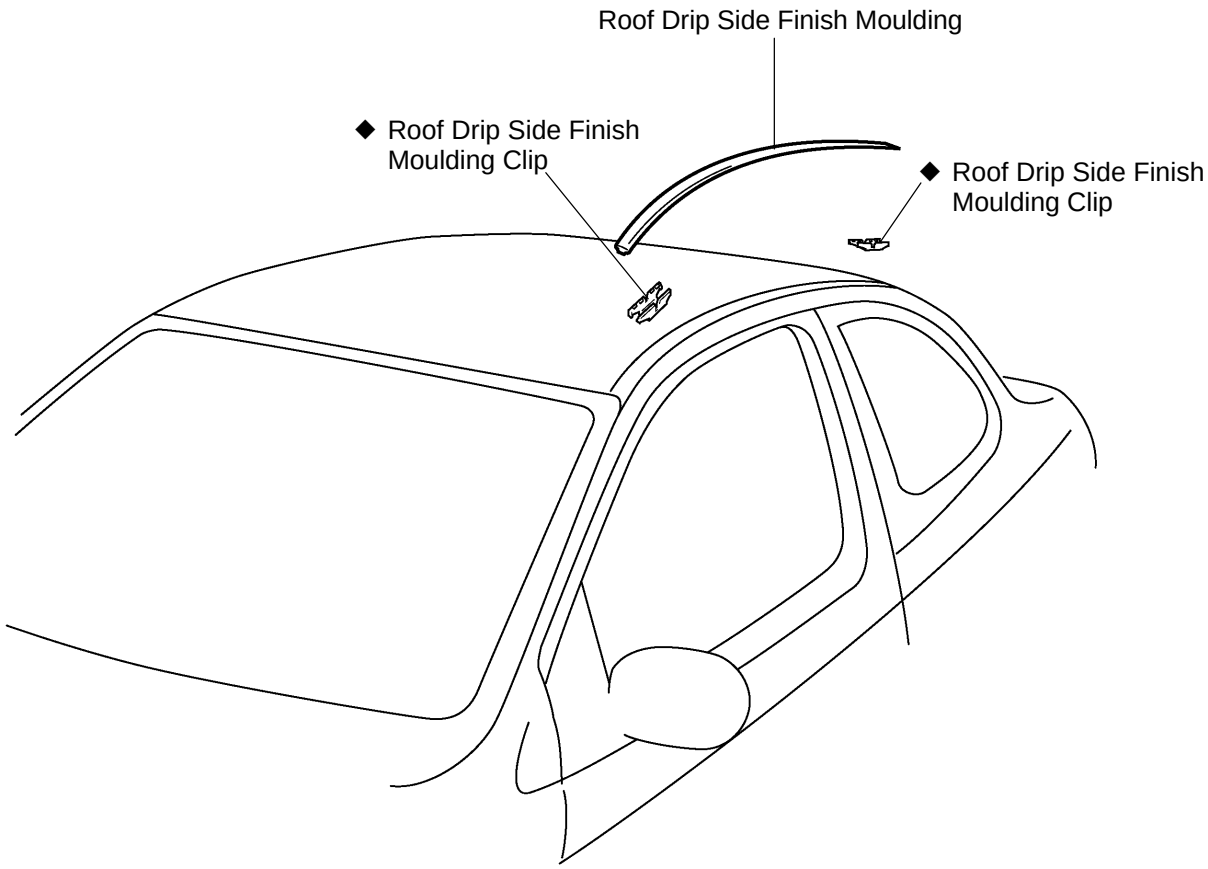

T ◆ Non-reusable part

H12713

INSTALLATION

1. INSTALL ROOF DRIP SIDE FINISH MOULDING CLIP

If the roof drip side finish moulding clip comes off.

(a) Using a heat light, heat the body mounting surface to 40 - 60 ˚C (104 - 140 ˚F).

NOTICE:

Do not heat the body excessively.

(b) Remove the adhesive tape and adhesive from the body.

(c) Wipe off stains with cleaner.

(d) Using a heat light, heat the body and clip.

Body: 40 - 60 ˚C (104 - 140 ˚F)

Clip: 20 - 30 ˚C (68 - 86 ˚F)

NOTICE:

Do not heat the body and clip excessively.

(e) Install the clip.

(f) Use the same manner described above to the other side (the front or rear side).

2. INSTALL ROOF DRIP SIDE FINISH MOULDING

BO2UC-01

REMOVAL

REMOVE ROOF DRIP SIDE FINISH MOULDING

Using a moulding remover, remove the roof drip side finish moulding.

NOTICE:

- **Do not damage the body.**
- **When the clip comes off, replace it with a new one.**

REAR BUMPER

BO2HX-04

COMPONENTS

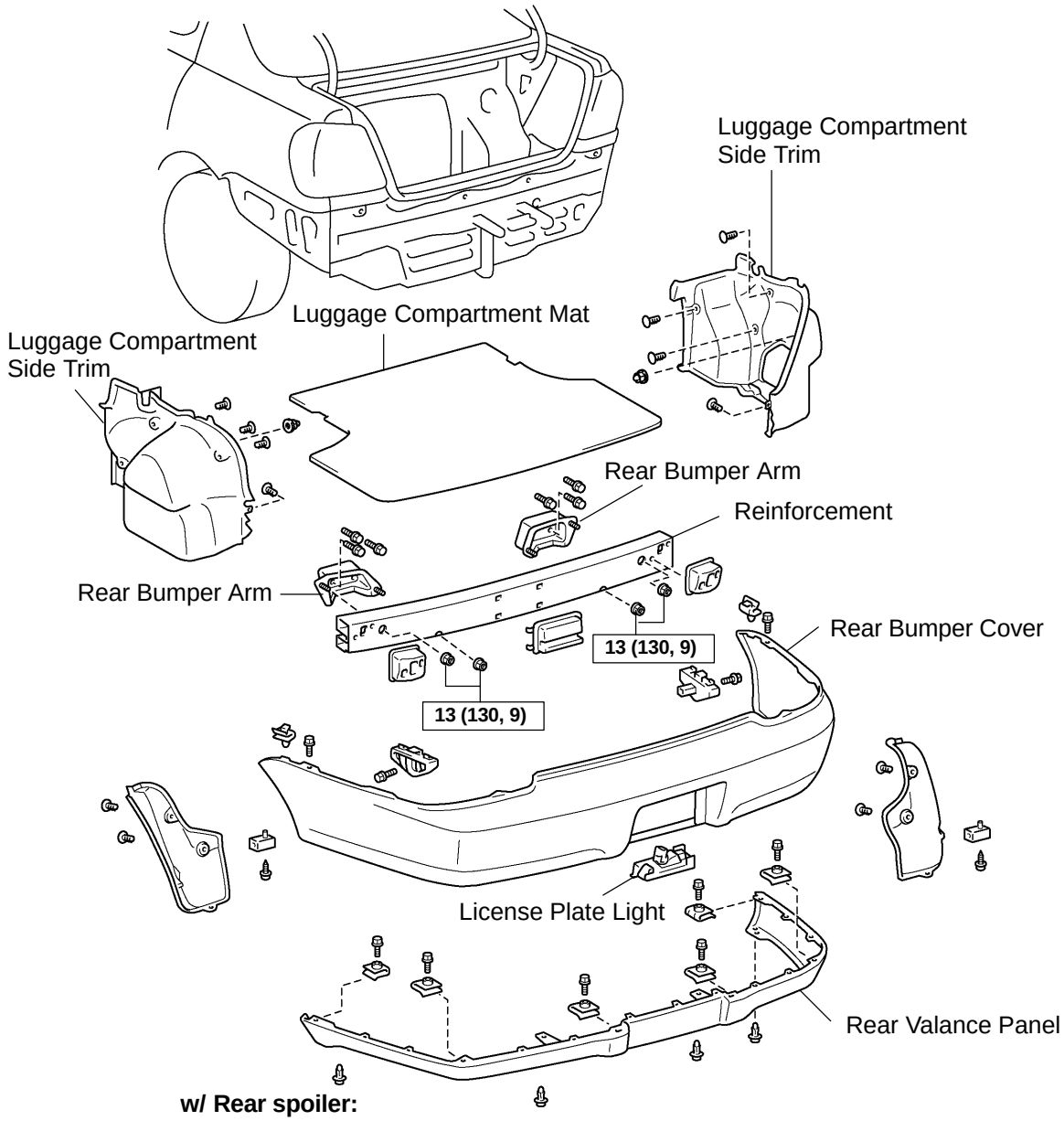

T N·m (kgf·cm, ft·lbf) : Specified torque

H12522

BO2I5-03

ADJUSTMENT

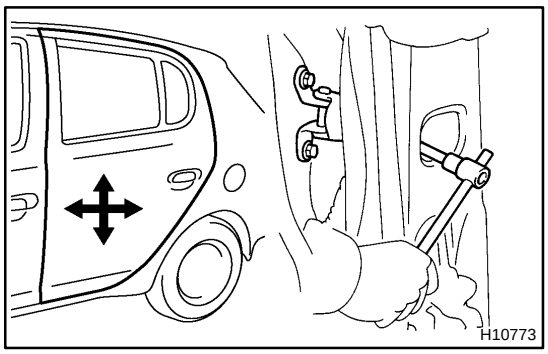

1. ADJUST DOOR IN FORWARD/ REARWARD AND VERTICAL DIRECTIONS

(a) Remove the front and rear door scuff plates.
(b) Remove the center pillar lower garnish.
(c) Remove the front seat outer belt (See page BO-1 10).
(d) Loosen the body side hinge nuts to adjust.
Torque: 25 N·m (260 kgf·cm, 19 ft·lbf)
(e) Install the front seat outer belt and center pillar lower garnish (See page BO-1 10).
(f) Install the front and rear door scuff plates.

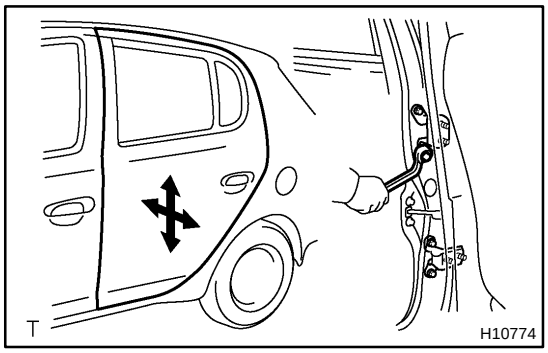

2. ADJUST DOOR IN LEFT/RIGHT AND VERTICAL DIRECTIONS

Loosen the door side hinge bolts to adjust.
Torque: 25 N·m (260 kgf·cm, 19 ft·lbf)

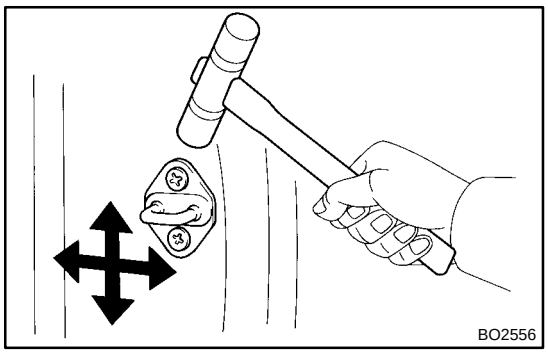

3. ADJUST DOOR LOCK STRIKER

(a) Check that the door fit and door lock linkages are adjusted correctly.
(b) Loosen the striker mounting screws to adjust.
Torque: 23 N·m (230 kgf·cm, 17 ft·lbf)
(c) Using a plastic hammer, tap the striker to adjust it.

REAR DOOR

COMPONENTS

BO2I3-03

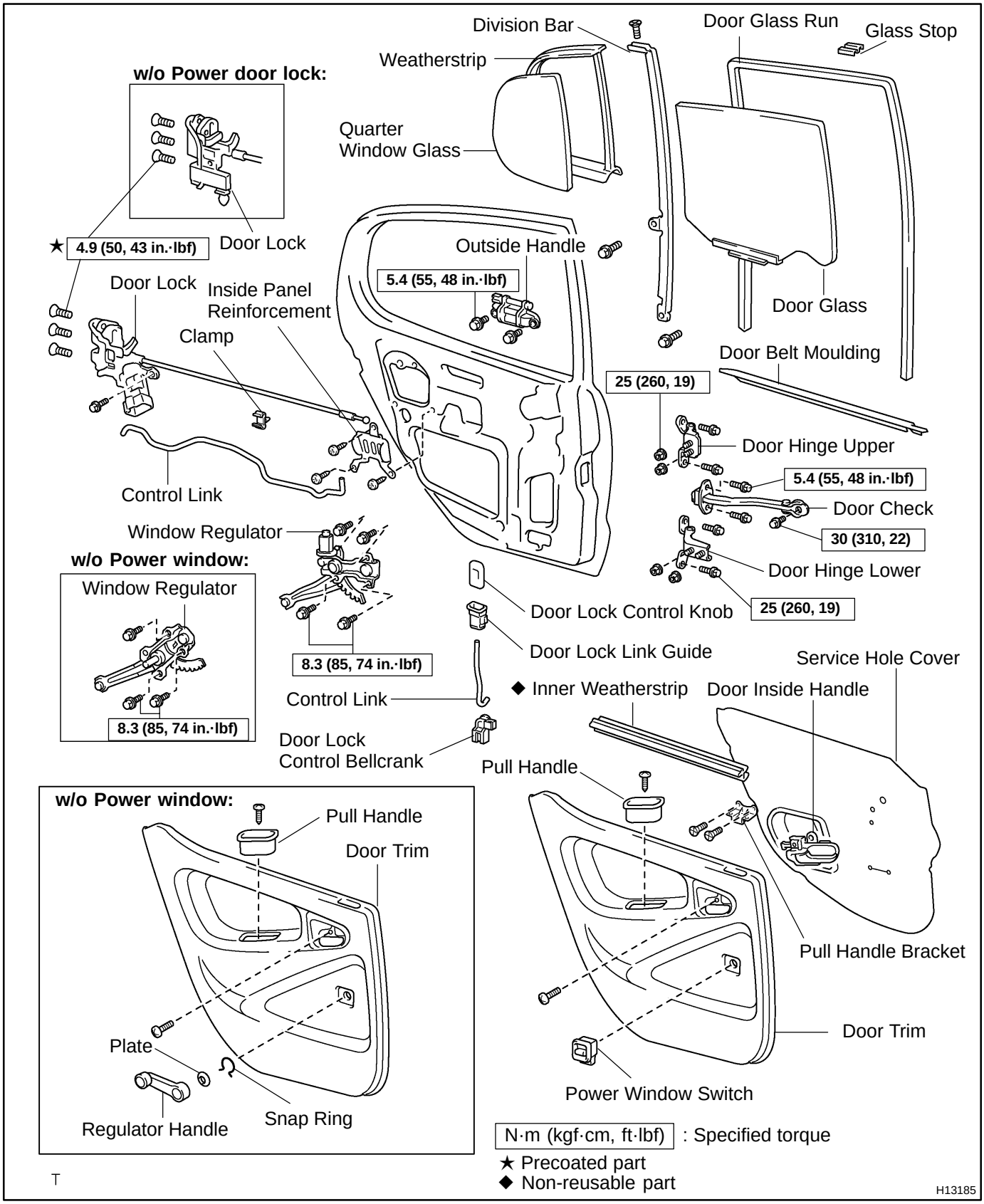

T

BO2U4-01

DISASSEMBLY

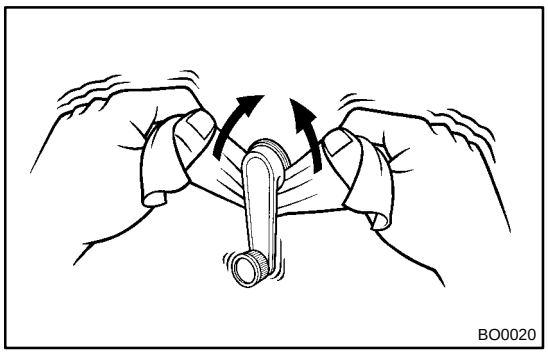

1. w/o Power window:

REMOVE REGULATOR HANDLE

Pull off the snap ring with a shop rag and remove the regulator handle and plate.

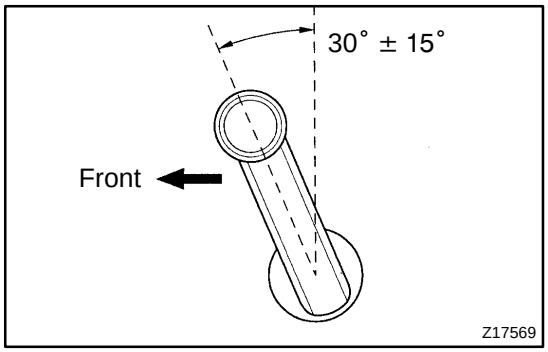

HINT:

At the time of reassembly, please refer to the following item.

With door window fully closed, install the plate and the regulator handle with the snap ring.

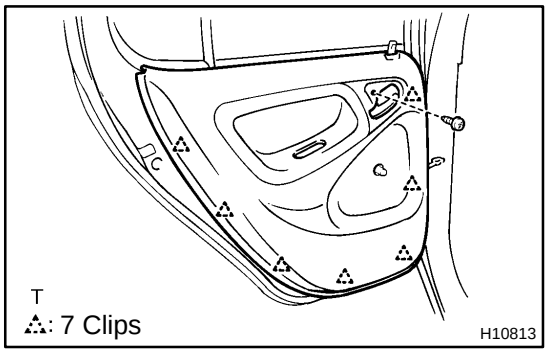

2. REMOVE DOOR TRIM

(a) Remove the screw and pull handle.

(b) Remove the screw.

(c) Insert a screwdriver between the door panel and door trim to pry the trim out.

NOTICE:

Be careful not to damage the door panel and trim.

HINT:

Tape the screwdriver tip before use.

(d) Pull the door trim upward to remove it.

(e) w/ Power window:
Disconnect the power window switch connector.

(f) w/ Power window:
Remove the power window switch from the door trim.

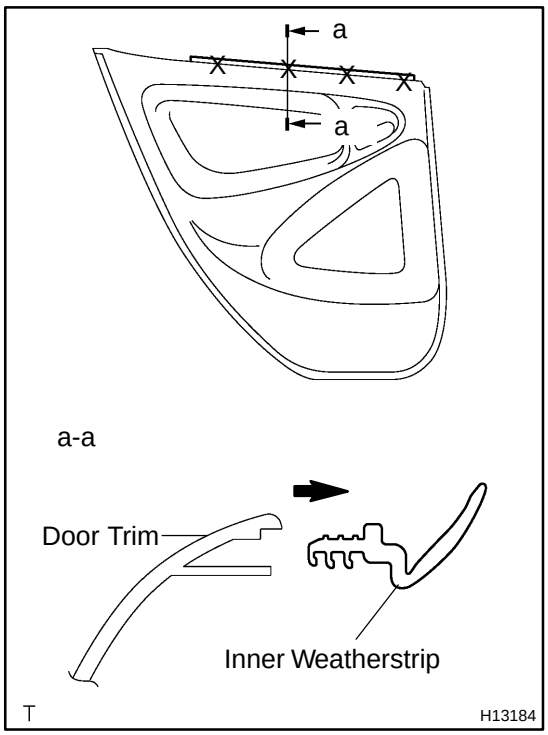

3. REMOVE INNER WEATHERSTRIP

Remove the inner weatherstrip as shown in the illustration.

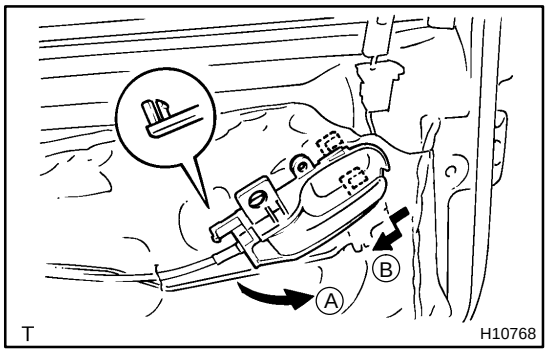

4. REMOVE DOOR INSIDE HANDLE

(a) Remove the door inside handle in order A, B as shown in the illustration.

(b) Disconnect the door lock cable from the door inside handle.

5. REMOVE PULL HANDLE BRACKET

Remove the 2 screws and pull handle bracket.

6. REMOVE SERVICE HOLE COVER

Remove the service hole cover.

HINT:

At the time of reassembly, please refer to the following item.

Bring out the cable through the service hole cover.

7. REMOVE INSIDE PANEL REINFORCEMENT

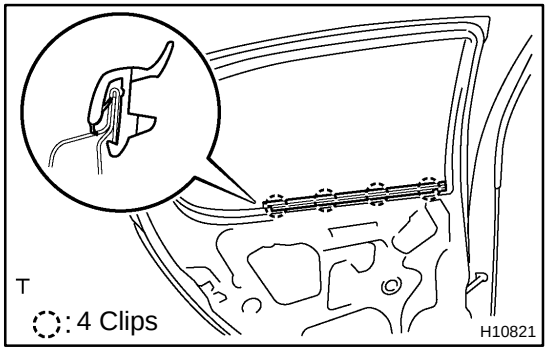

8. REMOVE DOOR BELT MOULDING

Using a scraper, remove the door belt moulding.

HINT:

Tape the scraper tip before use.

9. REMOVE QUARTER WINDOW GLASS

(a) Remove the door glass run.

HINT:

Pull the glass run upward.

(b) Remove the glass stop.

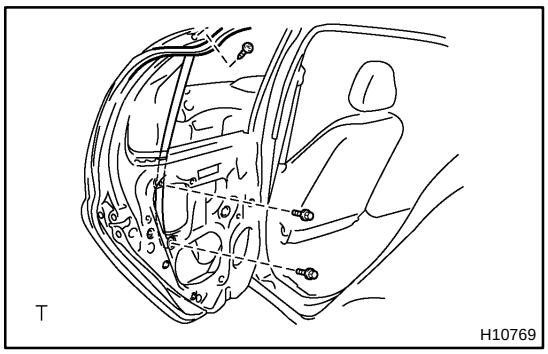

(c) Turn over the weatherstrip and remove the screw.
(d) Remove the 2 bolts and division bar.
(e) Remove the quarter window glass with weatherstrip.
(f) Remove the weatherstrip from the quarter window glass.

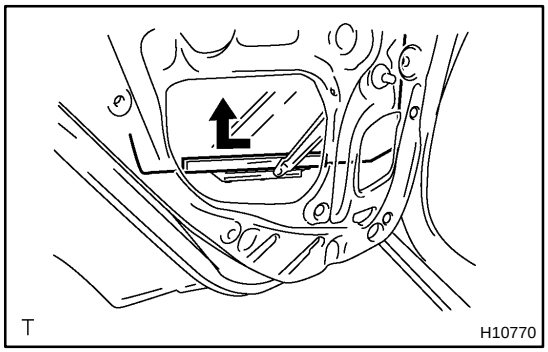

10. REMOVE DOOR GLASS

(a) Slide out the door glass from the window regulator.

NOTICE:

Be careful not to drop the door glass.

(b) Pull the door glass upward to remove it.

11. REMOVE WINDOW REGULATOR

(a) w/ Power window:
Disconnect the connector, then remove the 4 bolts and window regulator.
Torque: 8.3 N·m (85 kgf·cm, 74 in.·lbf)

(b) w/o Power window:
Remove the 3 bolts and window regulator.
Torque: 8.3 N·m (85 kgf·cm, 74 in.·lbf)

HINT:
Remove the regulator through the service hole.

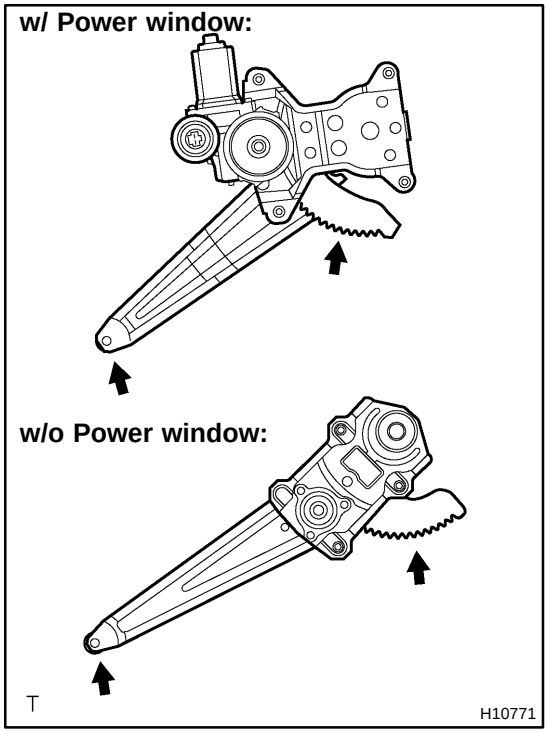

HINT:
At the time of reassembly, please refer to the following item.
Apply MP grease to the window regulator.

NOTICE:

At the time of reassembly, please refer to the following item.

Do not apply grease to the spring of the window regulator.

w/ Power door lock:

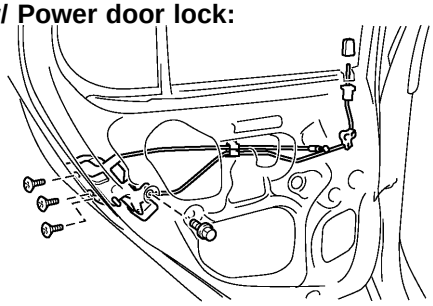

w/o Power door lock:

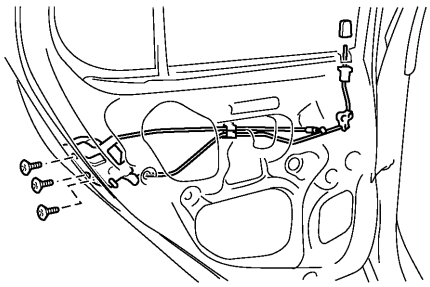

T H10818

12. REMOVE DOOR LOCK

(a) Remove the door lock control knob.

(b) Remove the door lock control bellcrank and disconnect the 2 door lock control links.

(c) Disconnect the door lock control link and cable from the door lock link clamp.

(d) w/ Power door lock:
Disconnect the connector and remove the bolt, 3 screws and door lock with control links.
Torque: 4.9 N·m (50 kgf·cm, 43 in.·lbf)

(e) w/o Power door lock:
Remove the 3 screws and door lock with control links.
Torque: 4.9 N·m (50 kgf·cm, 43 in.·lbf)

HINT:
At the time of reassembly, please refer to the following item.
Apply adhesive to 3 screws.
Part No. 08833-00070, THREE BOND 1324 or equivalent

(f) Remove the door lock through the service hole.

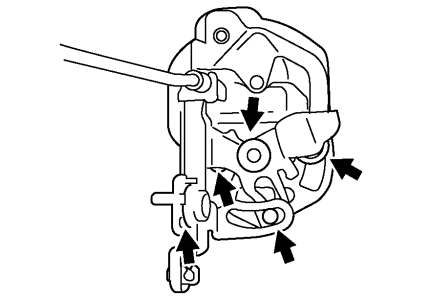

T H10817

HINT:
At the time of reassembly, please refer to the following item.
Apply MP grease to the sliding and rotating parts of the door lock.

13. REMOVE DOOR LOCK LINK GUIDE AND CLAMP

Using a screwdriver, remove the door lock link guide and clamp.
HINT:
Tape the screwdriver tip before use.

14. REMOVE OUTSIDE HANDLE

Remove the 2 bolts and outside handle.
Torque: 5.4 N·m (55 kgf·cm, 48 in.·lbf)

BO2I6-02

REASSEMBLY

Reassembly is in the reverse order of disassembly (See page BO-16).

REAR SEAT (Bench Type)

COMPONENTS

BO2IK-02

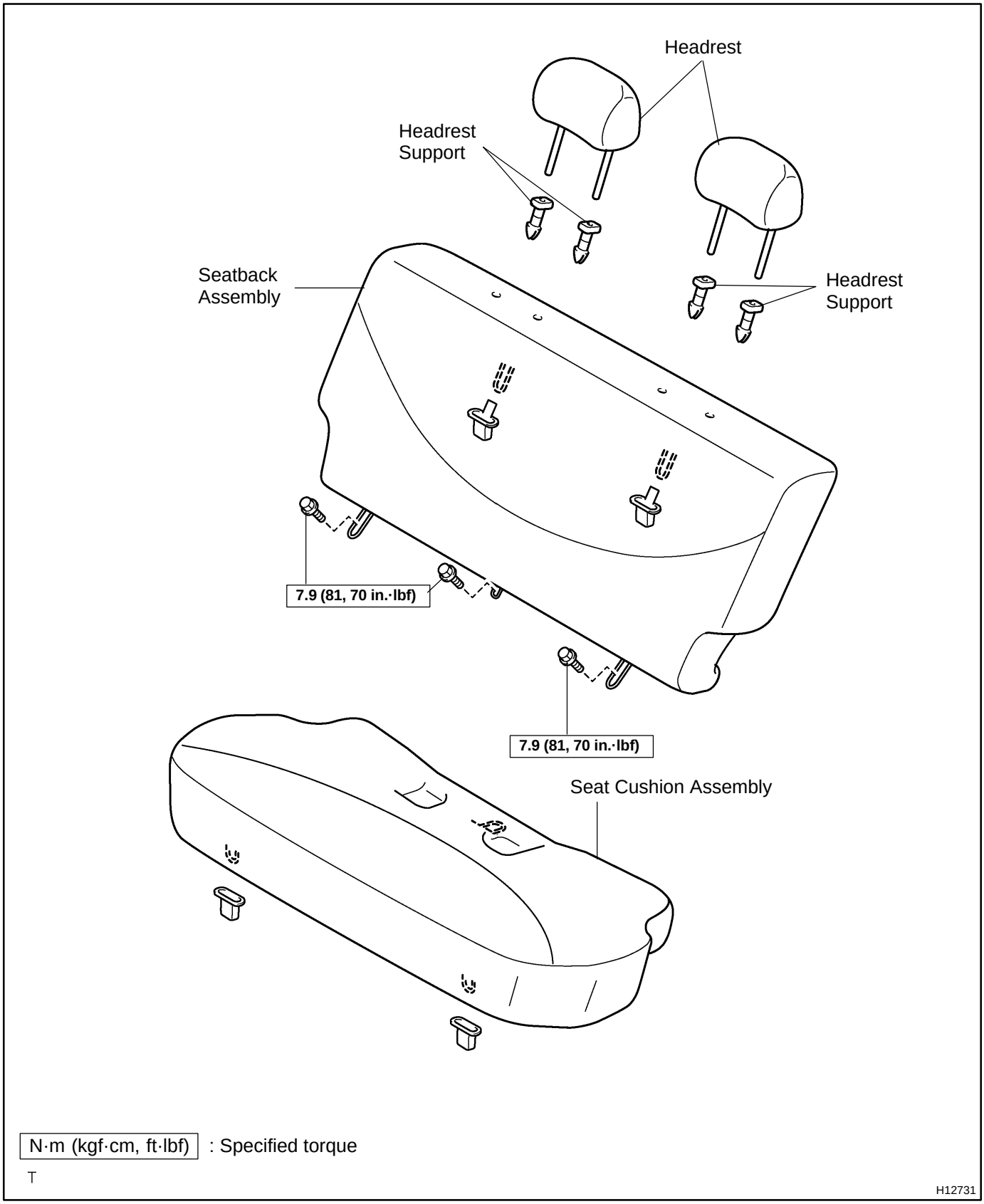

N·m (kgf·cm, ft·lbf) : Specified torque

T

H12731

BO2UN-01

DISASSEMBLY

1. REMOVE HEADRESTS

2. REMOVE HEADREST SUPPORTS

BO2IO-02

INSTALLATION

1. INSTALL SEATBACK ASSEMBLY

Install the seatback assembly with the 3 bolts.

Torque: 7.9 N·m (81 kgf·cm, 70 in.·lbf)

2. INSTALL SEAT CUSHION ASSEMBLY

(a) Hook the seat cushion wire to the hook.

(b) Pull out the rear seat inner belts through the seat cushion assembly.

(c) Push the front portion of the seat cushion assembly to install it.

HINT:

Confirm that the seat cushion assembly is installed firmly.

BO2IN-02

REASSEMBLY

1. INSTALL HEADREST SUPPORTS

2. INSTALL HEADRESTS

BO2UM-01

REMOVAL

1. REMOVE SEAT CUSHION ASSEMBLY

(a) Pull up the front portion of the seat cushion assembly.

(b) Through the rear seat inner belts to remove the seat cushion assembly.

(c) Remove the seat cushion assembly.

2. REMOVE SEATBACK ASSEMBLY

Remove the 3 bolts and seatback assembly.

REAR SEAT (Split Type)

BO2IP-02

COMPONENTS

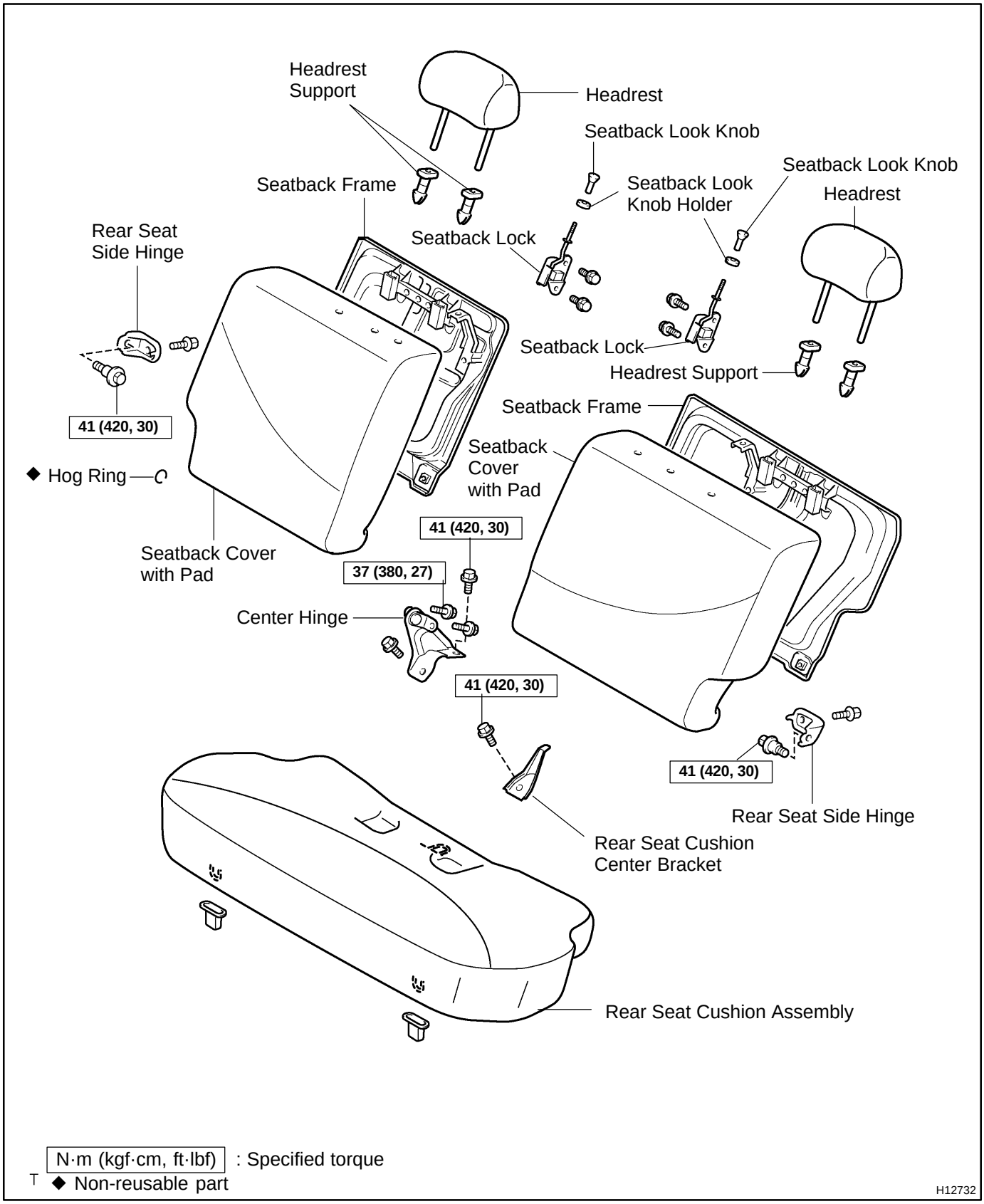

BO2UP-02

DISASSEMBLY

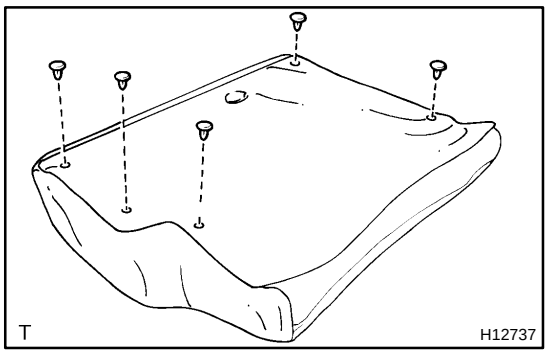

1. REMOVE SEATBACK FRAME

(a) Remove the 5 clips.

(b) Remove the seatback lock knob.

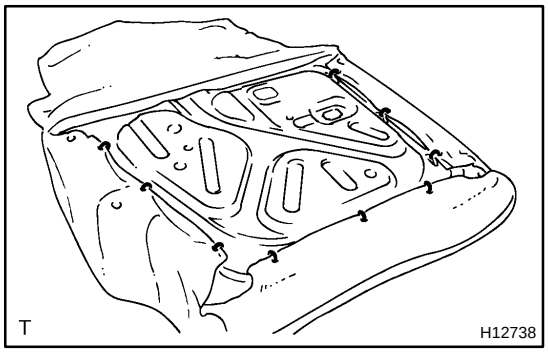

(c) Remove the hog rings.

(d) Remove the seatback lock knob holder and 2 headrest supports.

(e) Remove the seatback frame from seatback cover with pad.

(f) Use the same manner described above to the other side.

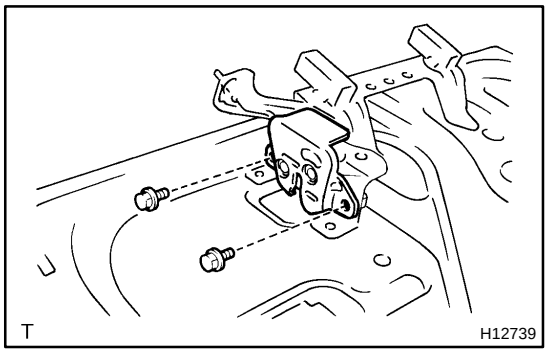

2. REMOVE SEATBACK LOCK

(a) Remove the 2 bolts and seatback lock from the seatback frame.

(b) Use the same manner described above to the other side.

BO2UR-02

INSTALLATION

1. INSTALL REAR SEAT CUSHION CENTER BRACKET

Install the rear seat cushion center bracket with the bolt.

Torque: 41 N·m (420 kgf·cm, 30 ft·lbf)

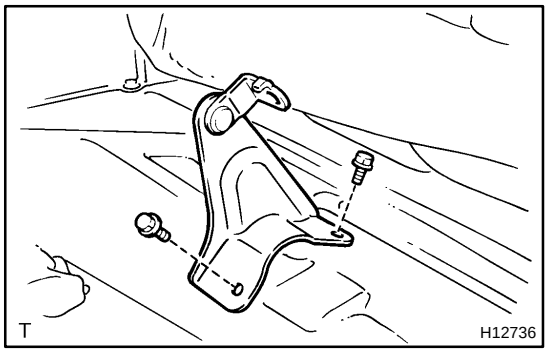

2. INSTALL CENTER HINGE

Install the center hinge to the body with the 2 bolts.

Torque: 41 N·m (420 kgf·cm, 30 ft·lbf)

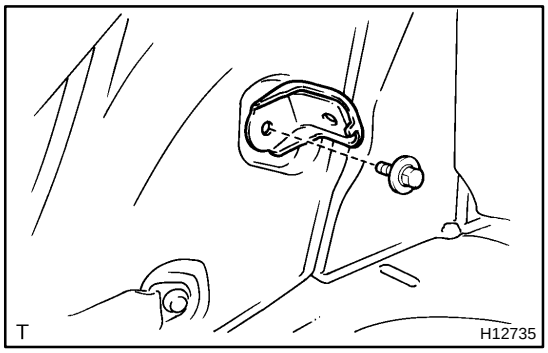

3. INSTALL REAR SEAT SIDE HINGE

(a) Install the rear seat side hinge with the bolt.

Torque: 41 N·m (420 kgf·cm, 30 ft·lbf)

(b) Use the same manner described above to the other side.

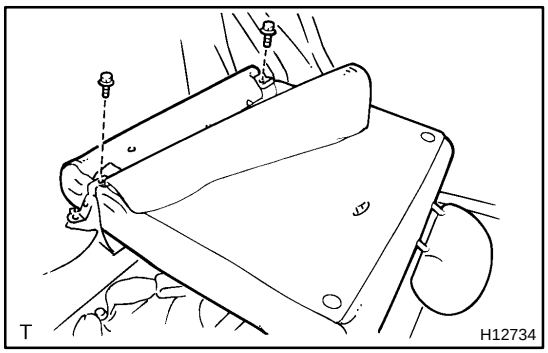

4. INSTALL SEATBACK ASSEMBLY

(a) Install the seatback assembly with the 2 bolts.

Torque: 37 N·m (380 kgf·cm, 27 ft·lbf)

(b) Use the same manner described above to the other side.

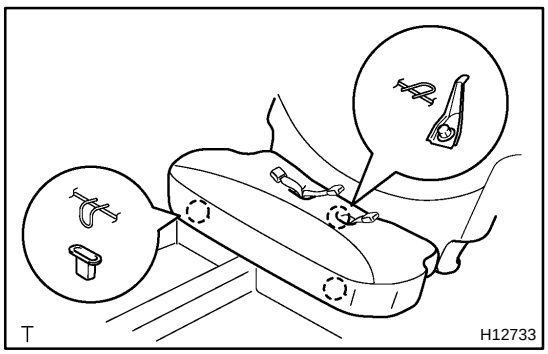

5. INSTALL SEAT CUSHION ASSEMBLY

(a) Hook the seat cushion wire to the rear seat cushion center bracket.

(b) Push the front portion of seat cushion assembly to install it.

HINT:

Confirm that the seat cushion assembly is installed firmly.

BO2UQ-02

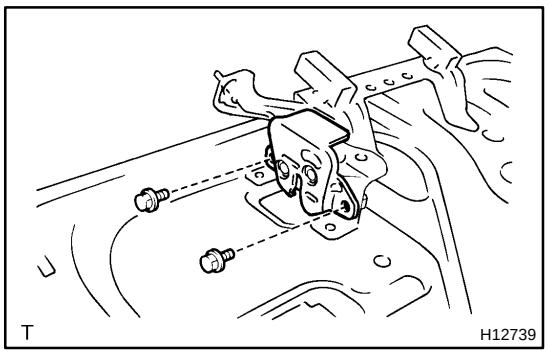

REASSEMBLY

1. INSTALL SEATBACK LOCK

(a) Install the seatback lock to the seatback frame with the 2 bolts.

(b) Use the same manner described above to the other side.

2. INSTALL SEATBACK FRAME

(a) Install the seatback frame to the seatback cover with pad.

(b) Instal the seatback lock knob holder and 2 headrest supports.

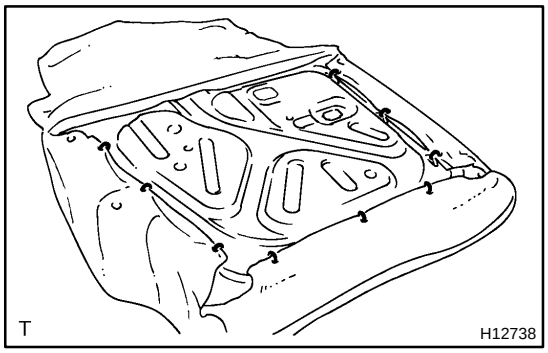

(c) Install the hog rings as shown in the illustration.

HINT:

When installing hog rings, take care to prevent wrinkles as little as possible.

(d) Install the seatback lock knob.

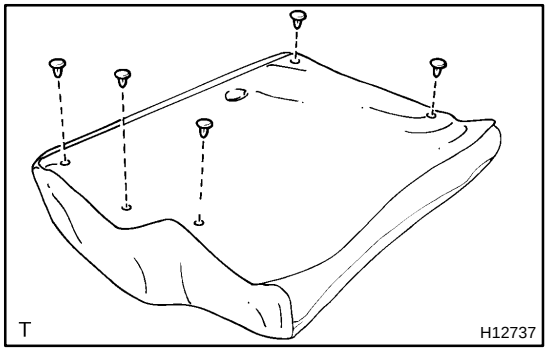

(e) Install the 5 clips.

(f) Use the same manner described above to the other side.

BO2UO-02

REMOVAL

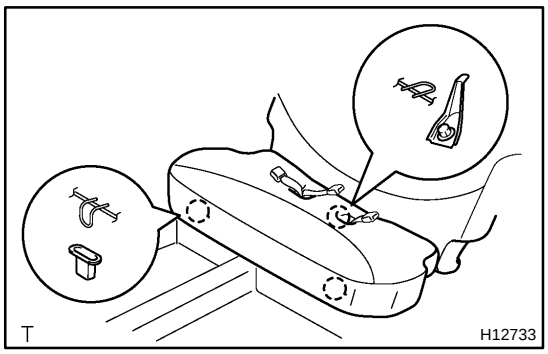

1. REMOVE SEAT CUSHION ASSEMBLY

(a) pull up the front portion of the seat cushion.

(b) Through the rear seat inner belts to remove the seat cushion assembly.

(c) Release the seat cushion wire from center bracket and remove the seat cushion assembly.

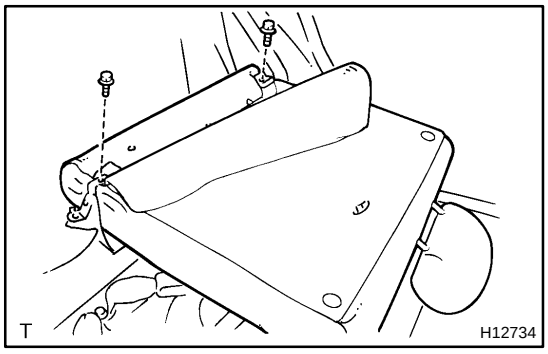

2. REMOVE SEATBACK ASSEMBLY

(a) Remove the 2 clips.

(b) Remove the 2 bolts and seatback assembly.

(c) Use the same manner described above to the other side.

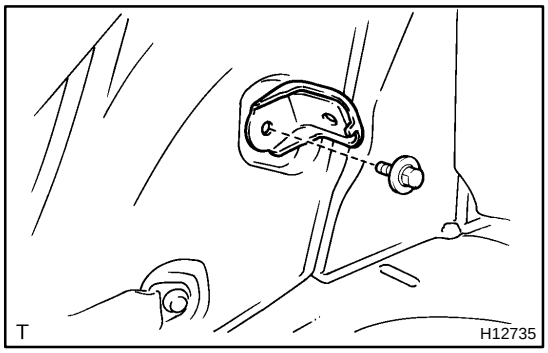

3. REMOVE REAR SEAT SIDE HINGE

(a) Remove the bolt and rear seat side hinge.

(b) Use the same manner described above to the other side.

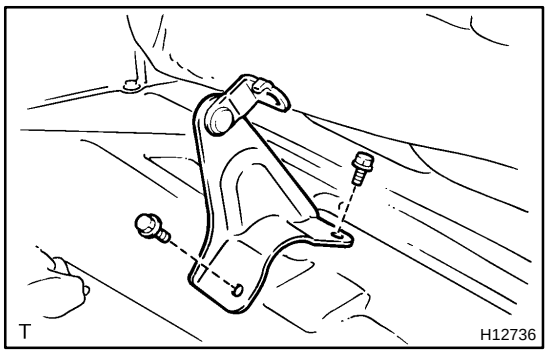

4. REMOVE CENTER HINGE

Remove the 2 bolts and center hinge from the body.

5. REMOVE REAR SEAT CUSHION CENTER BRACKET

Remove the bolt and rear seat cushion center bracket.

ROOF HEADLINING (2-Door)

BO2UH-01

COMPONENTS

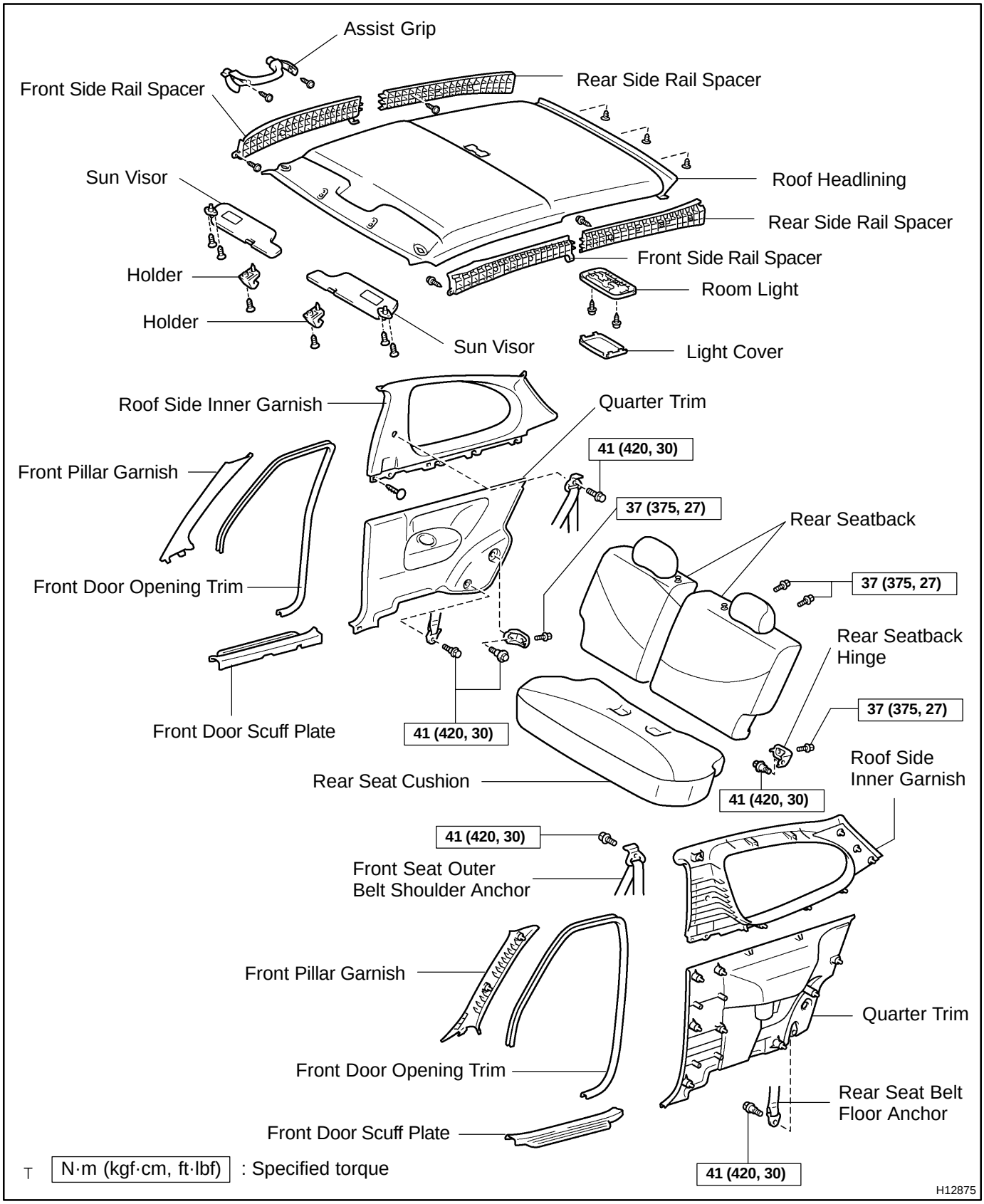

INSTALLATION

Installation is in the reverse order of removal (See page BO-86).

BO2UI-02

REMOVAL

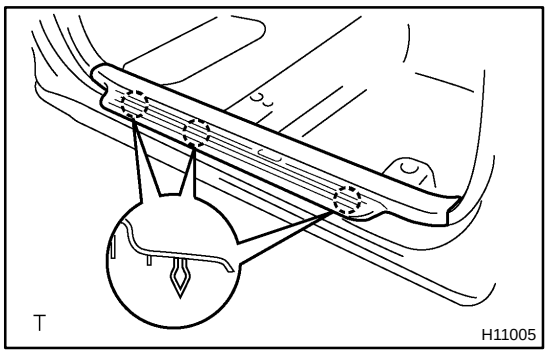

1. REMOVE FRONT DOOR SCUFF PLATE

(a) Insert a screwdriver between the front door scuff plate and body to pry it out.

HINT:

Tape the screwdriver tip before use.

(b) Use the same manner described above to the other side.

2. REMOVE FRONT DOOR OPENING TRIMS

Remove the front door opening trims except cowl side trim parts.

3. REMOVE REAR SEAT CUSHION

(See page BO-101 or BO-106)

4. REMOVE REAR SEATBACK

(See page BO-101 or BO-106)

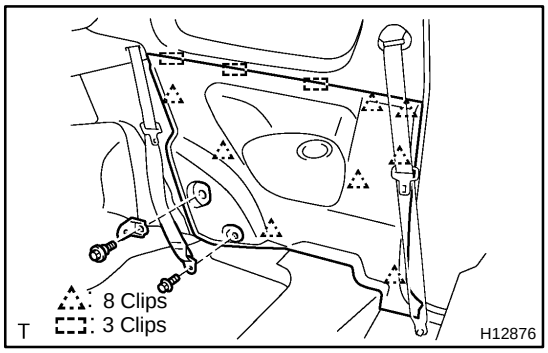

5. REMOVE QUARTER TRIM

(a) Remove the bolt and rear seat outer belt floor anchor.

Torque: 41 N·m (420 kgf·cm, 30 ft·lbf)

(b) w/ Split type rear seat:

Remove the bolt and rear seatback hinge.

Torque: 41 N·m (420 kgf·cm, 30 ft·lbf)

(c) Insert a screwdriver between the quarter trim and body to pry it out.

HINT:

Tape the screwdriver tip before use.

(d) Use the same manner described above to the other side.

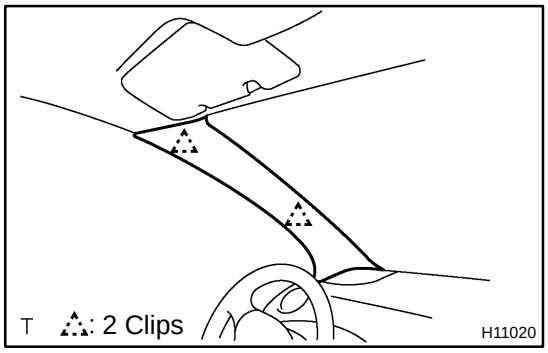

6. REMOVE FRONT PILLAR GARNISH

(a) Using a screwdriver, remove the front pillar garnish.

HINT:

Tape the screwdriver tip before use.

(b) Use the same manner described above to the other side.

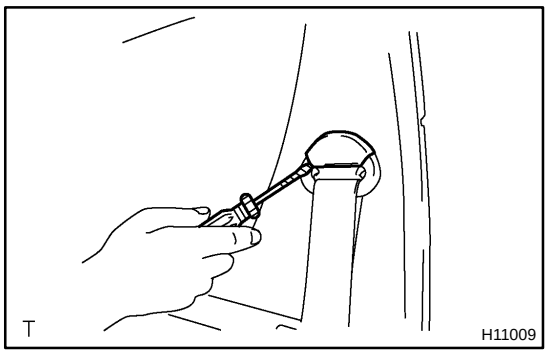

7. REMOVE ROOF SIDE INNER GARNISH

(a) Using a screwdriver, open the seat belt shoulder anchor cover cap.

HINT:

Tape the screwdriver tip before use.

(b) Remove the bolt and front seat outer belt shoulder anchor.

Torque: 41 N·m (420 kgf·cm, 30 ft·lbf)

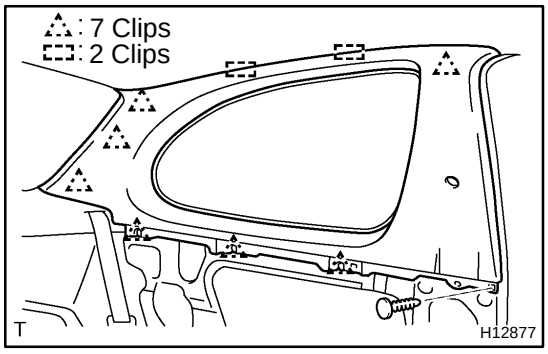

(c) Remove the clip.

(d) Insert a screwdriver between the roof side inner garnish and body to pry it out.

HINT:

Tape the screwdriver tip before use.

(e) Use the same manner described above to the other side.

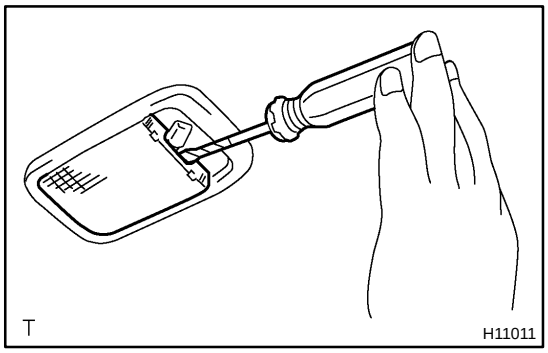

8. REMOVE ROOM LIGHT

(a) Using a screwdriver, remove the light cover.

HINT:

Tape the screwdriver tip before use.

(b) Remove the 2 screws and room light.

(c) Disconnect the connector.

9. REMOVE ASSIST GRIP

(a) Using a screwdriver, open the caps.

HINT:

Tape the screwdriver tip before use.

(b) Remove the 2 screws.

(c) Remove the assist grip.

10. REMOVE SUN VISORS AND HOLDERS

(a) Remove the 4 screws and sun visors.

(b) Remove the 2 screws and holders.

11. REMOVE ROOF HEADLINING

Remove the 3 clips and roof headlining.

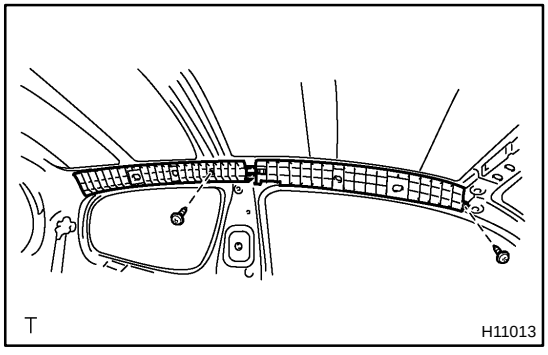

12. REMOVE FRONT AND REAR SIDE RAIL SPACER

(a) Remove the screw and front side rail spacer.

(b) Remove the screw and rear side rail spacer.

(c) Use the same manner described above to the other side.

ROOF HEADLINING (4-Door)

BO2UJ-01

COMPONENTS

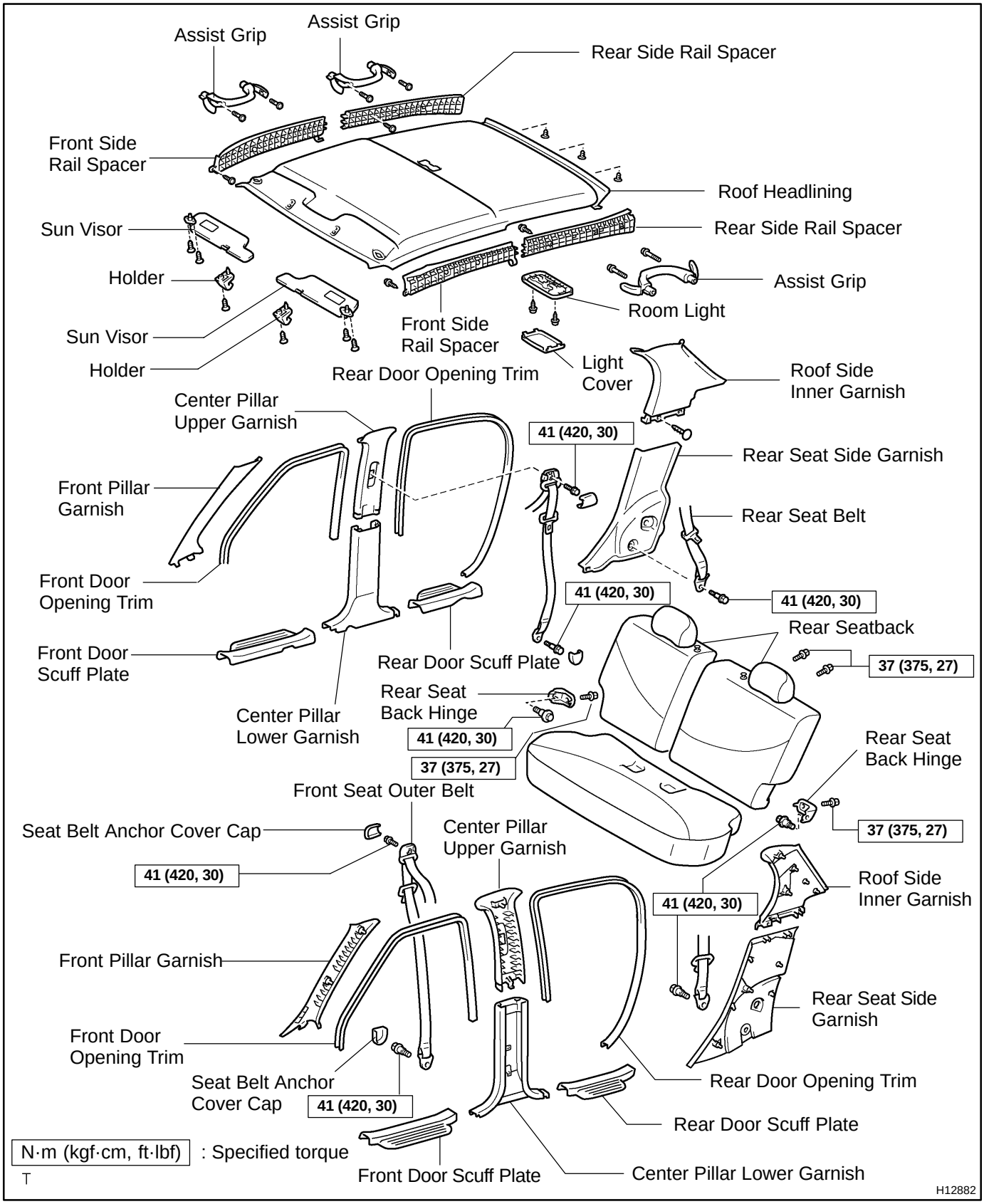

INSTALLATION

Installation is in the reverse order of removal (See page BO-90).

BO2UK-02

REMOVAL

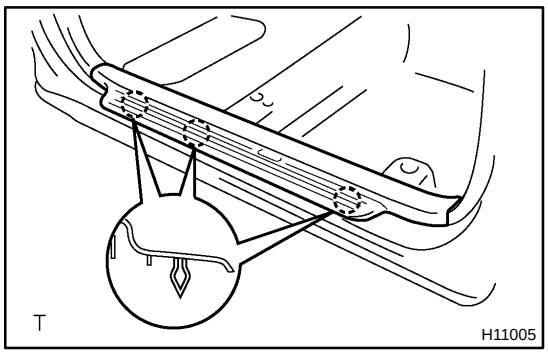

1. REMOVE FRONT DOOR SCUFF PLATE

(a) Insert a screwdriver between the front door scuff plate and body to pry it out.

HINT:

Tape the screwdriver tip before use.

(b) Use the same manner described above to the other side.

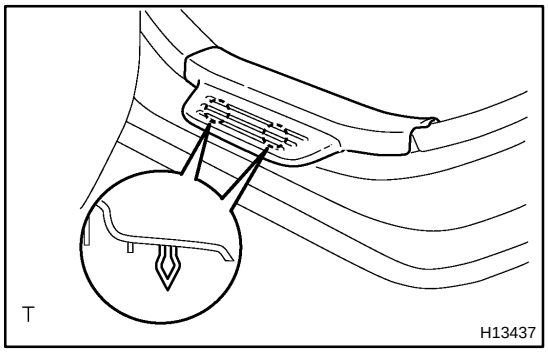

2. REMOVE REAR DOOR SCUFF PLATES

(a) Insert a screwdriver between the rear door scuff plate and body to pry it out.

HINT:

Tape the screwdriver tip before use.

(b) Use the same manner described above to the other side.

3. REMOVE FRONT DOOR OPENING TRIMS

Remove the front door opening trim except cowl side trim part.

4. REMOVE REAR DOOR OPENING TRIMS

5. REMOVE REAR SEAT CUSHION

(See page BO-101 or BO-106)

6. REMOVE REAR SEATBACK

(See page BO-101 or BO-106)

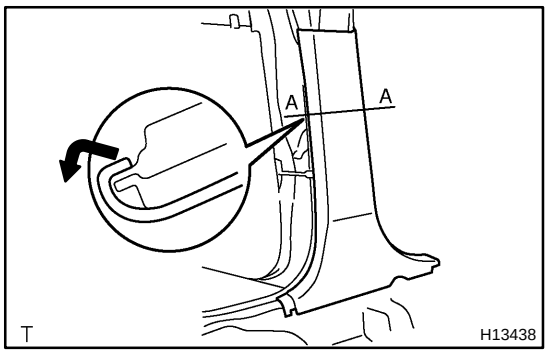

7. REMOVE CENTER PILLAR LOWER GARNISH

(a) Using a screwdriver, remove the front seat outer belt floor anchor cover cap.

HINT:

Tape the screwdriver tip before use.

(b) Remove the bolt and front seat outer belt floor anchor.

Torque: 41 N·m (420 kgf·cm, 30 ft·lbf)

(c) Insert a screwdriver between the garnish and body to pry it out.

HINT:

Tape the screwdriver tip before use.

(d) Use the same manner described above to the other side.

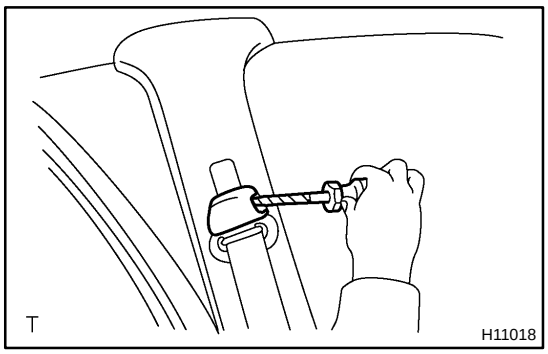

8. REMOVE CENTER PILLAR UPPER GARNISH

(a) Using a screwdriver, remove the seat belt shoulder anchor cover cap.

HINT:

Tape the screwdriver tip before use.

(b) Remove the bolt and front seat outer belt shoulder anchor.

Torque: 41 N·m (420 kgf·cm, 30 ft·lbf)

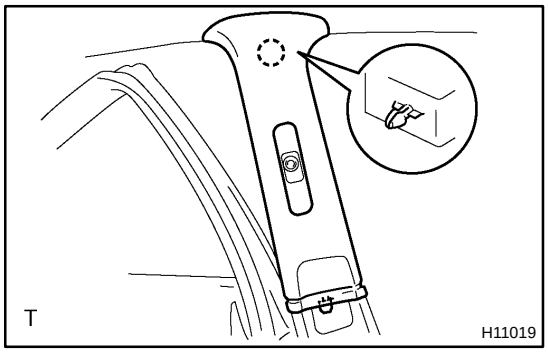

(c) Using a screwdriver, remove the center pillar upper garnish.

HINT:

Tape the screwdriver tip before use.

(d) Use the same manner described above to the other side.

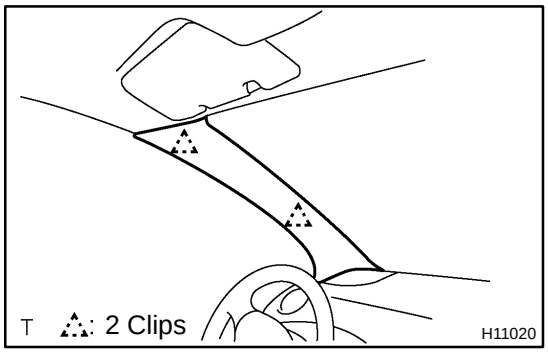

9. REMOVE FRONT PILLAR GARNISH

(a) Using a screwdriver, remove the front pillar garnish.

HINT:

Tape the screwdriver tip before use.

(b) Use the same manner described above to the other side.

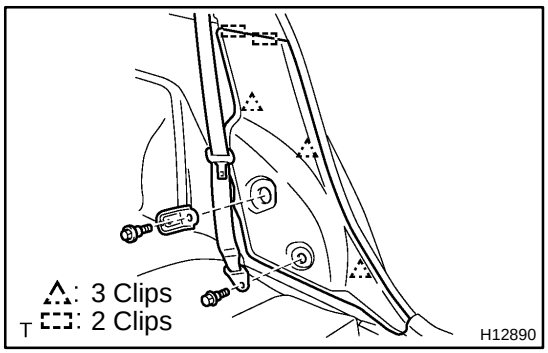

10. REMOVE REAR SEAT SIDE GARNISH

(a) Remove the bolt and rear seat outer belt floor anchor.

Torque: 41 N·m (420 kgf·cm, 30 ft·lbf)

(b) w/ Split type rear seat:

Remove the bolt and rear seatback hinge.

Torque: 41 N·m (420 kgf·cm, 30 ft·lbf)

(c) Using a screwdriver, remove the rear seat side garnish.

HINT:

Tape the screwdriver tip before use.

(d) Use the same manner described above to the other side.

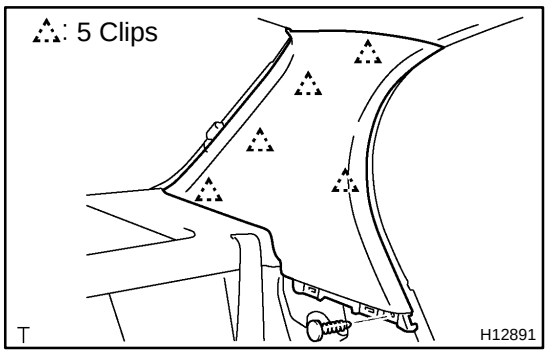

11. REMOVE ROOF SIDE INNER GARNISH

(a) Remove the clip.

(b) Insert a screwdriver between the roof side inner garnish and body to pry it out.

HINT:

Tape the screwdriver tip before use.

(c) Use the same manner described above to the other side.

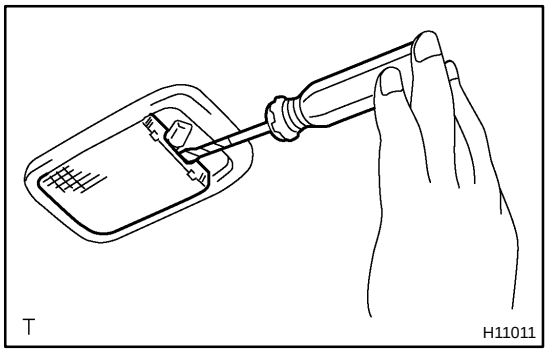

12. REMOVE ROOM LIGHT

(a) Using a screwdriver, remove the light cover.

HINT:

Tape the screwdriver tip before use.

(b) Remove the 2 screws and the room light.

(c) Disconnect the connector.

13. REMOVE ASSIST GRIP

(a) Remove the 2 screws.

(b) Remove the assist grip.

HINT:

Remove the other assist grips in the same manner if there are 3 assist grips.

14. REMOVE SUN VISORS AND HOLDERS

(a) Remove the 4 screws and sun visors.

(b) Remove the 2 screws and holders.

15. REMOVE ROOF HEADLINING

Remove the 3 clips and roof headlining.

16. REMOVE FRONT AND REAR SIDE RAIL SPACER

(a) Remove the screw and front side rail spacer.

(b) Remove the screw and rear side rail spacer.

(c) Use the same manner described above to the other side.

BO2HJ-02

DISPOSAL

HINT:

When scrapping vehicles equipped with a seat belt pretensioner or disposing of a front seat outer belt (with seat belt pretensioner) always first activate the seat belt pretensioner in accordance with the procedure described below. If any abnormality occurs in the seat belt pretensioner operation, contact the SERVICE DEPT. of the TOYOTA MOTORS SALES, U.S.A., INC. When disposing of a front seat outer belt (with seat belt pretensioner) activated in a collision, follow the same procedure given in step 1-(e) in ”DISPOSAL”.

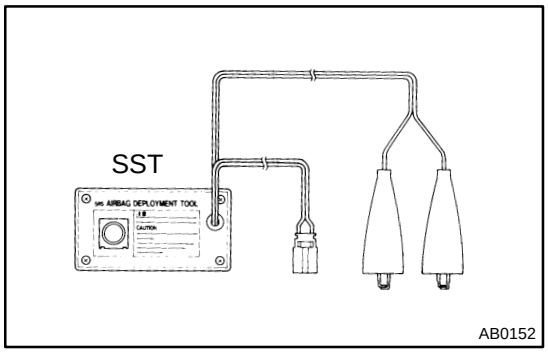

CAUTION:

- **Never dispose of the front seat outer belt which has an inactivated pretensioner.**
- **The seat belt pretensioner produces a sizeable exploding sound when it activates, so perform the operation out-of-door and where it will not create a nuisance to nearby residents.**
- **When activating the seat belt pretensioner, always use the specified SST. (SRS Airbag Deployment Tool) Perform the operation in a place away from electrical noise.**

  SST 09082-00700, 09082-00740
- **When activating a front seat outer belt (with seat belt pretensioner), perform the operation at least 10 m (33 ft) away from the front seat outer belt.**
- **Use gloves and safety glasses when handling a front seat outer belt with activated pretensioner.**
- **Always wash your hands with water after completing the operation.**
- **Do not apply water, etc. to a front seat outer belt with the activated pretensioner.**

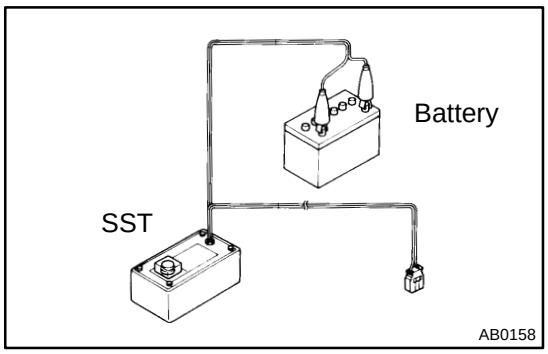

1. SEAT BELT PRETENSIONER ACTIVATION WHEN SCRAPPING VEHICLE

HINT:

Have a battery ready as the power source to activate the seat belt pretensioner.

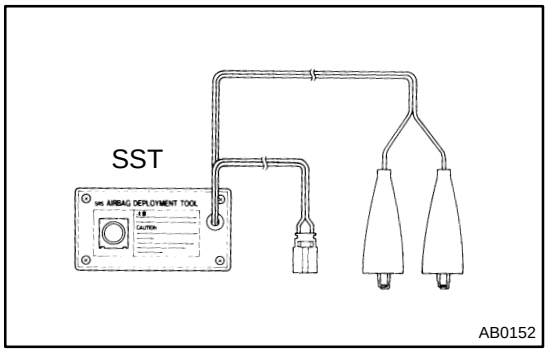

(a) Check the functioning of SST.

CAUTION:

When activating the seat belt pretensioner, always use the specified SST: SRS Airbag Deployment Tool.

SST 09082-00700, 09082-00740

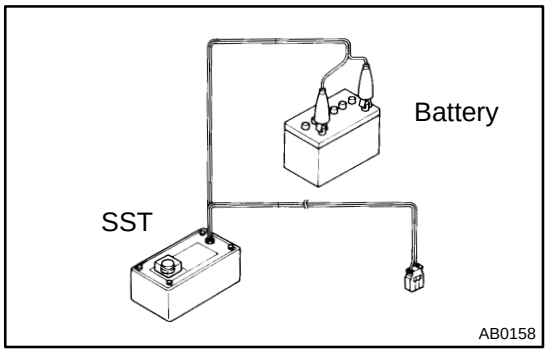

(1) Connect the SST to the battery.

Connect the red clip of the SST to the battery positive (+) terminal and the black clip to the battery negative (-) terminal.

HINT:

Do not connect the yellow connector which will be connected with the seat belt pretensioner.

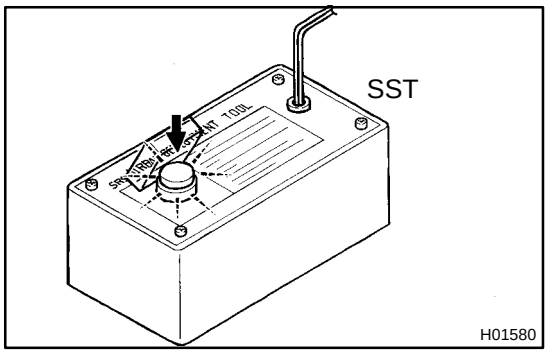

(2) Press the SST activation switch, and check the LED of the SST activation switch lights up.

CAUTION:

If the LED lights up when the activation switch is not being pressed, SST malfunction is probable, so definitely do not use the SST.

(b) Disconnect the pretensioner connector.

(1) Remove the front door scuff plate.

(2) 4-Door vehicle:
Remove the rear door scuff plate.

(3) 2-Door vehicle:
Remove the front door opening trim.

(4) 2-Door vehicle:
Remove the rear seat cushion (See page BO-101 or BO-106).

(5) 2-Door vehicle:
Remove the rear seatback (See page BO-101 or BO-106).

(6) 2-Door vehicle:
Remove the quarter trim.

(7) 4-Door vehicle:
Remove the center pillar lower garnish.

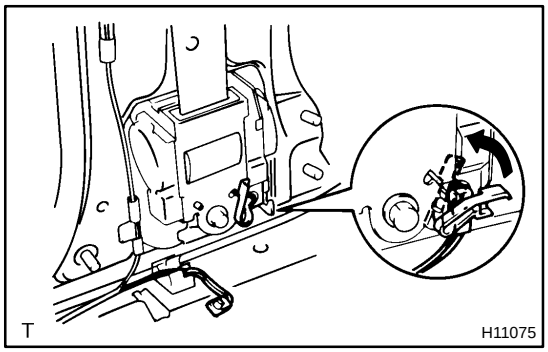

(8) Disconnect the pretensioner connector as shown in the illustration.

(c) Install the SST.

(1) Buckle the front seat belt and check that there is no looseness and slack in the front seat inner belt and front seat outer belt.

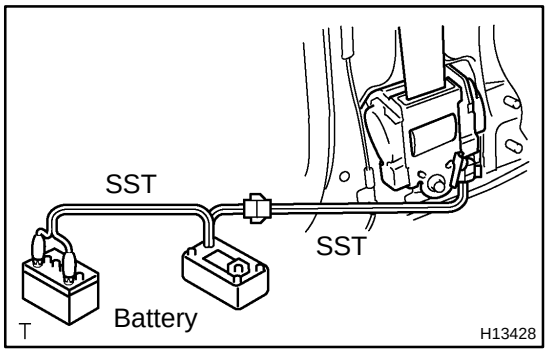

(2) Connect the 2 SST, then connect them to the seat belt pretensioner.

SST 09082-00700, 09082-00740

NOTICE:

To avoid damaging the SST connector and wire harness, do not lock the secondary lock of the twin lock.

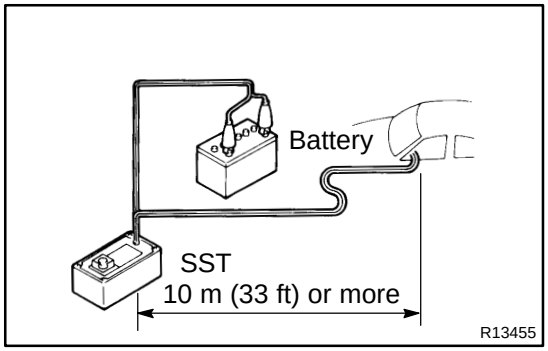

(3) Move the SST to at least 10 m (33 ft) away from the front of the vehicle.

(4) Close all the doors and windows of the vehicle.

NOTICE:

Take care not to damage the SST wire harness.

(5) Connect the SST red clip to the battery positive (+) terminal and the black clip to the negative (-) terminal.

(d) Activate the seat belt pretensioner.

(1) Confirm that no one is inside the vehicle or within 10 m (33 ft) area around the vehicle.

(2) Press the SST activation switch and activate the seat belt pretensioner.

HINT:

The seat belt pretensioner operates simultaneously as the LED of the SST activation switch lights up.

(e) Dispose of the front seat outer belt (with seat belt pretensioner).

CAUTION:

- **The front seat outer belt is very hot when the seat belt pretensioner is activated, so leave it alone for at least 30 minutes after activation.**
- **Use gloves and safety glasses when handling a front seat outer belt with the activated seat belt pretensioner.**
- **Always wash your hands with water after completing the operation.**
- **Do not apply water, etc. to a front seat outer belt with the activated seat belt pretensioner.**

HINT:

When scrapping a vehicle, activate the seat belt pretensioner and scrap the vehicle with the activated front seat outer belt still installed.

2. ACTIVATION WHEN DISPOSING OF FRONT SEAT OUTER BELT ONLY

NOTICE:

- **When disposing of the front seat outer belt (with seat belt pretensioner) only, never use the customer's vehicle to activate the seat belt pretensioner.**
- **Be sure to follow the procedure given on the next page when activating the seat belt pretensioner.**

HINT:

Have a battery ready as the power source when activating the seat belt pretensioner.

(a) Remove the front seat outer belt (See page BO-1 10).

HINT:

Cut the belt near the seat belt retractor.

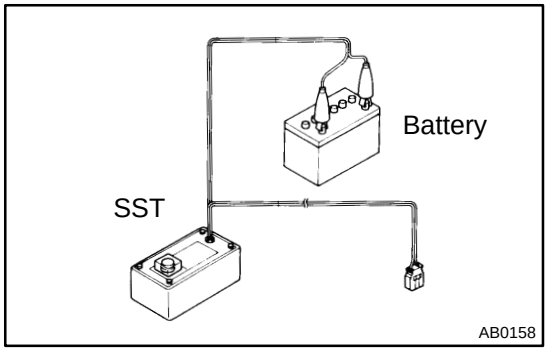

(b) Check the functioning of SST (See step 1-(a)).
SST 09082-00700, 09082-00740

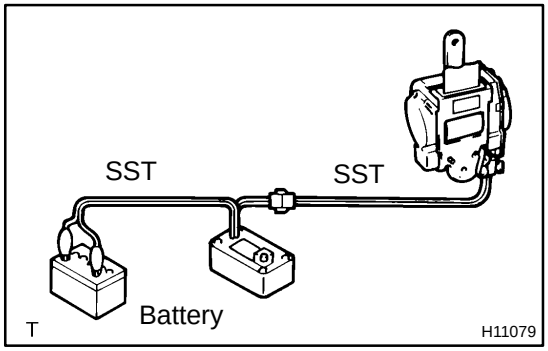

(c) Install the SST.
(1) Connect the 2 SST, then connect them to the seat belt pretensioner.
SST 09082-00700, 09082-00740

NOTICE:

To avoid damaging the SST connector and wire harness, do not lock the secondary lock of the twin lock.

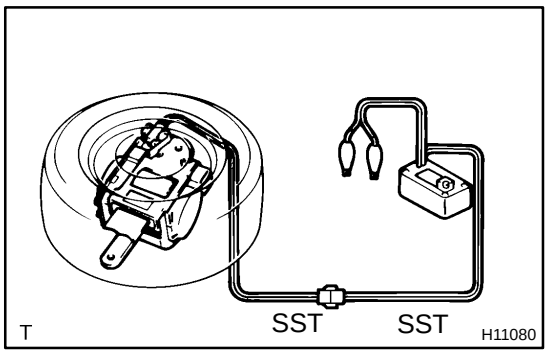

(2) Place the front seat outer belt on the ground and cover it with the disc wheel with tire.

NOTICE:

Place the front seat outer belt as shown in the illustration.

(3) Move the SST at least 10 m (33 ft) away from the disc wheel.

NOTICE:

Take care not to damage the SST wire harness.

(d) Activate the seat belt pretensioner.

(1) Connect the SST red clip to the battery positive (+) terminal and black clip to the battery negative (-) terminal.

(2) Check that no one is within 10 m (33 ft) area around the disc wheel.

(3) Press the SST activation switch and activate the seat belt pretensioner.

HINT:

The seat belt pretensioner operates simultaneously as the LED of the SST activation switch lights up.

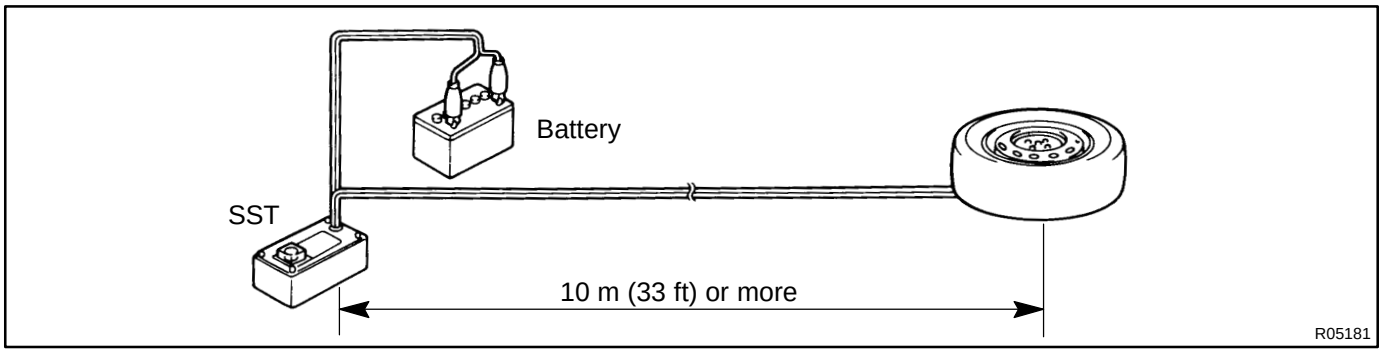

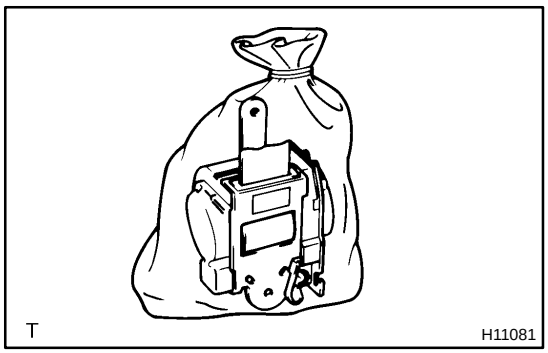

(e) Dispose of the front seat outer belt (with seat belt pretensioner).

CAUTION:

- **The front seat outer belt is very hot when the seat belt pretensioner is activated, so leave it alone for at least 30 minutes after activation.**
- **Use gloves and safety glasses when handling a front seat outer belt with the activated seat belt pretensioner.**
- **Always wash your hands with water after completing the operation.**
- **Do not apply water, etc. to a front seat outer belt with the activated seat belt pretensioner.**

(1) Remove the disc wheel and SST.

(2) Place the front seat outer belt in a vinyl bag, tie the end tightly and dispose of it in the same way as other general parts.

BO2HI-02

INSPECTION

1. PRETENSIONER IS NOT ACTIVATED

(a) Perform a diagnostic system check (See page DI-239).

2-Door (Quarter trim):

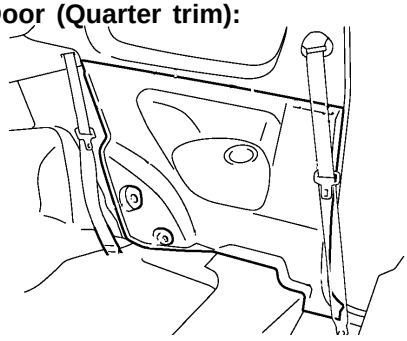

4-Door (Center pillar lower garnish):

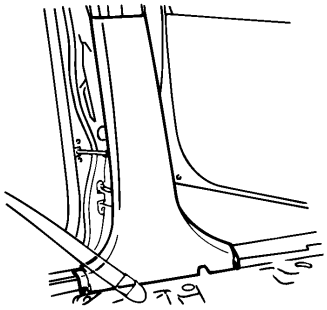

H12903

(b) Perform a visual check which includes the following items with the front seat outer belt removed from the vehicle.

- Check for cuts and cracks in, or marked discoloration on the quarter trim or center pillar lower garnish.
- Check for cuts and cracks in wire harness, and for chipping in connectors.

2-Door (Quarter panel):

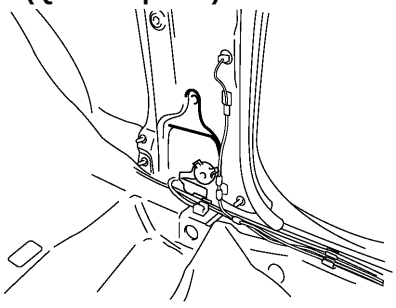

4-Door (Center pillar):

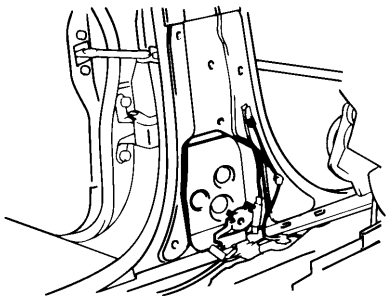

H12904

- Check for deformation of the quarter panel or center pillar.

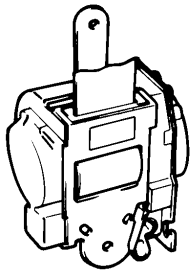
T
H11078

- Check for cuts and minute cracks in wire harness or marked discoloration on the front seat outer belt.

CAUTION:
For removal and installation of the front seat outer belt, see page BO-1 14 and BO-125 .
Be sure to follow the correct procedure.

2. PRETENSIONER IS ACTIVATED

(a) Perform a diagnostic system check (See page DI-239).

2-Door (Quarter panel):

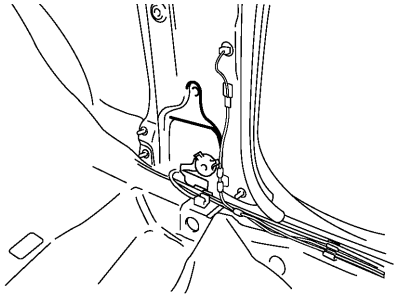

4-Door (Center pillar):

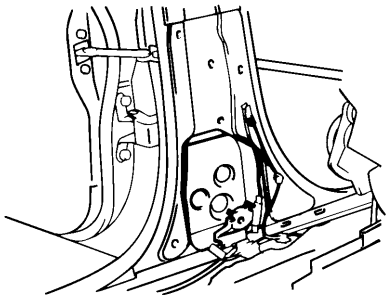
H12904

(b) Perform a visual check which includes the following items with the front seat outer belt removed from the vehicle.
- Check for deformation of the quarter panel or center pillar.
- Check for damage on the connector and wire harness.

BO2UU-01

INSTALLATION

NOTICE:

- **Never use seat belt pretensioner from another vehicle. When replacing parts, replace them with new parts.**
- **Make sure that the front seat outer belt is installed with the specified torque.**
- **If the front seat outer belt has been dropped, or there are cracks, dents or other defects in the case or connector, replace the front seat outer belt with a new one.**
- **When installing the front seat outer belt, take care that the wiring does not interfere with other parts and is not pinched between other parts.**

1. INSTALL FRONT SEAT OUTER BELT

(a) Install the retractor of front seat outer belt with the 2 bolts.
Torque:
Upper bolt: 4.7 N·m (48 kgf·cm, 42 in.·lbf)
Lower bolt: 41 N·m (420 kgf·cm, 30 ft·lbf)

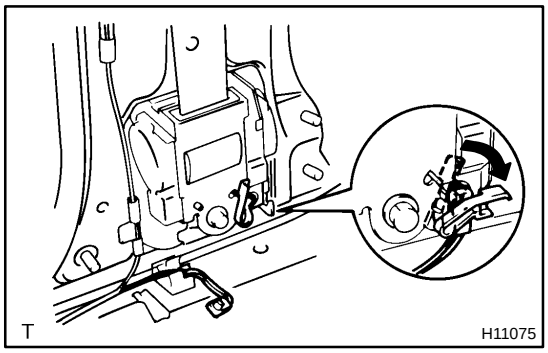

(b) Connect the pretensioner connector as shown in the illustration.

(c) 4-Door vehicle:
Install the front seat shoulder anchor with the bolt.
Torque: 41 N·m (420 kgf·cm, 30 ft·lbf)

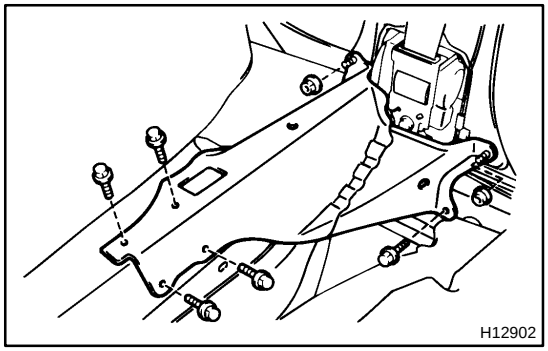

2. 2-Door vehicle:
INSTALL CENTER PILLAR TO FLOOR REINFORCEMENT

Install the center pillar to floor reinforcement with the 5 bolts and 2 nuts.

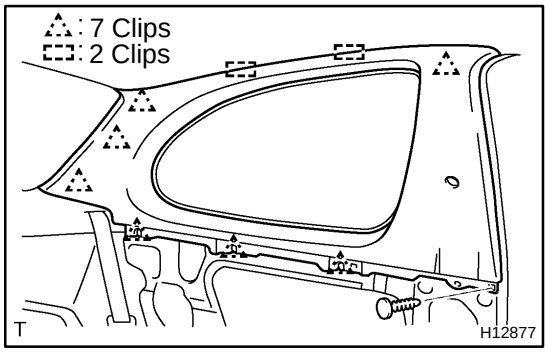

3. 2-Door vehicle:
INSTALL ROOF SIDE INNER GARNISH

(a) Install the roof side inner garnish to the body.

(b) Install the clip.

(c) Install the front seat outer belt shoulder anchor with the bolt.
Torque: 41 N·m (420 kgf·cm, 30 ft·lbf)

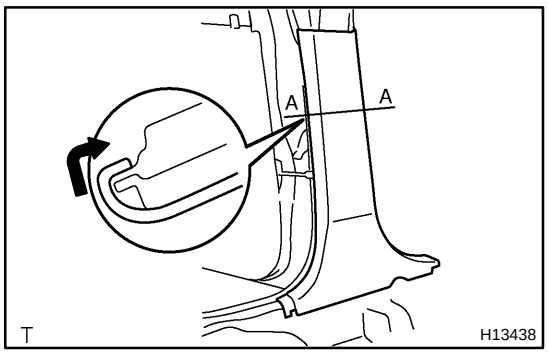

4. 4-Door vehicle:
INSTALL CENTER PILLAR LOWER GARNISH

(a) Install the center pillar lower garnish to the body.

(b) Install the front seat outer belt floor anchor with the bolt.
Torque: 41 N·m (420 kgf·cm, 30 ft·lbf)

(c) Install the front seat outer belt floor anchor cover cap.

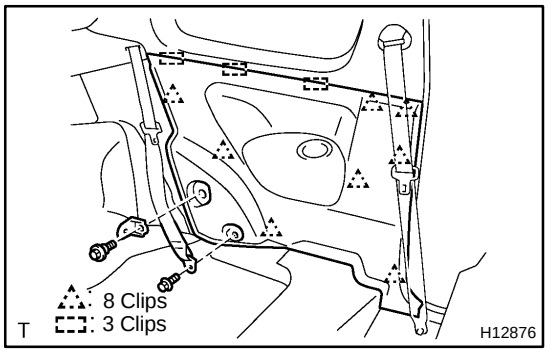

5. 2-Door vehicle:
INSTALL QUARTER TRIM

(a) Install the quarter trim to the body.

(b) w/ Split type rear seat:
Install the rear seatback hinge with the bolt.
Torque: 41 N·m (420 kgf·cm, 30 ft·lbf)

(c) Install the rear seat outer belt floor anchor with the bolt.
Torque: 41 N·m (420 kgf·cm, 30 ft·lbf)

6. 2-Door vehicle:
INSTALL REAR SEATBACK
(See page BO-104 or BO-109)

7. 2-Door vehicle:
INSTALL REAR SEAT CUSHION
(See page BO-104 or BO-109)

8. 2-Door vehicle:
INSTALL FRONT DOOR OPENING TRIM

9. 4-Door vehicle:
INSTALL REAR DOOR SCUFF PLATE

10. INSTALL FRONT DOOR SCUFF PLATE

SEAT BELT PRETENSIONER

BO2UT-01

REMOVAL

NOTICE:

- **If the wiring connector of the seat belt pretensioner is disconnected with the ignition switch at ON or ACC, diagnostic trouble codes will be recorded.**
- **Never use seat belt pretensioner from another vehicle. When replacing parts, replace them with new parts.**

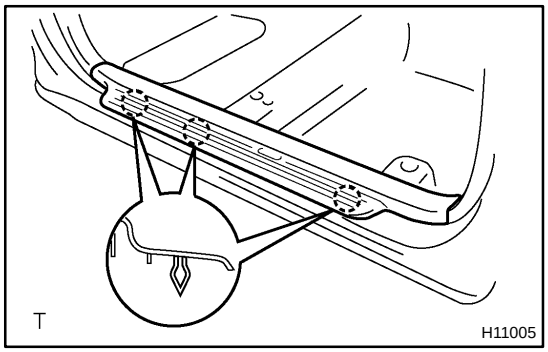

1. REMOVE FRONT DOOR SCUFF PLATE

Insert a screwdriver between the front door scuff plate and body to pry it out.

HINT:

Tape the screwdriver tip before use.

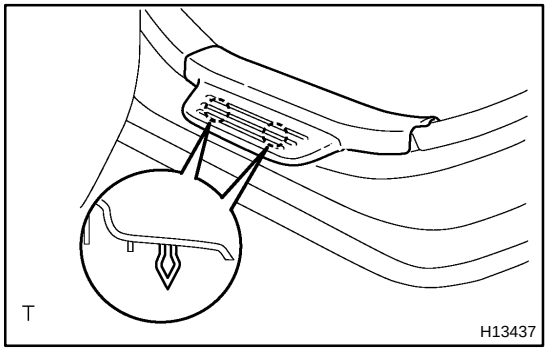

2. 4-Door vehicle:
REMOVE REAR DOOR SCUFF PLATE

Insert a screwdriver between the rear door scuff plate and body to pry it out.

HINT:

Tape the screwdriver tip before use.

3. 2-Door vehicle:
REMOVE FRONT DOOR OPENING TRIM

Remove the front door opening trim except cowl side trim part.

4. 2-Door vehicle:
REMOVE REAR SEAT CUSHION
(See page BO-101 or BO-106)

5. 2-Door vehicle:
REMOVE REAR SEATBACK
(See page BO-101 or BO-106)

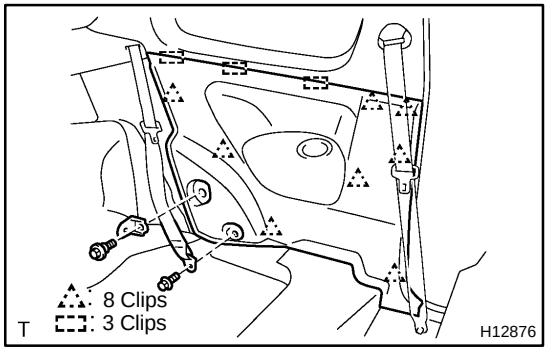

6. 2-Door vehicle:
REMOVE QUARTER TRIM

(a) Remove the bolt and rear seat outer belt floor anchor.

(b) w/ Split type rear seat:
Remove the bolt and seatback hinge.

(c) Insert a screwdriver between the quarter trim and body to pry it.

HINT:

Tape the screwdriver tip before use.

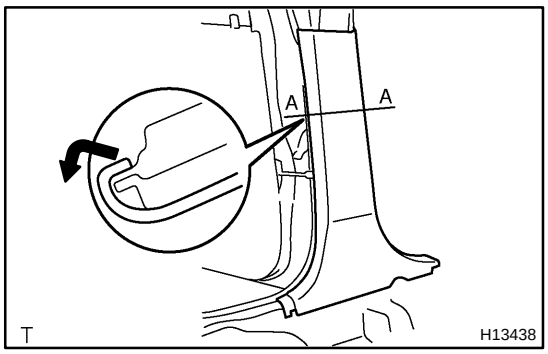

7. 4-Door vehicle:
REMOVE CENTER PILLAR LOWER GARNISH

(a) Using a screwdriver, remove the front seat outer belt floor anchor cover cap.

HINT:

Tape the screwdriver tip before use.

(b) Remove the bolt and front seat outer belt floor anchor.

(c) Insert a screwdriver between the garnish and body to pry it out.

HINT:

Tape the screwdriver tip before use.

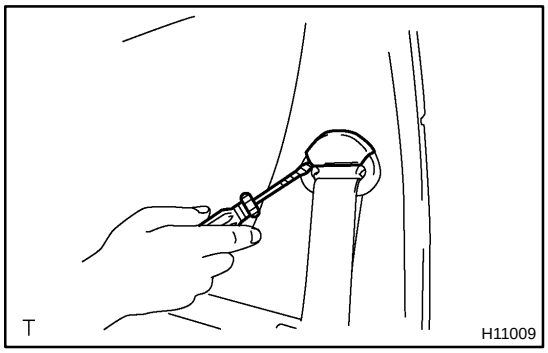

8. 2-Door vehicle:
REMOVE ROOF SIDE INNER GARNISH

(a) Using a screwdriver, open the seat belt shoulder anchor cover cap.

HINT:

Tape the screwdriver tip before use.

(b) Remove the bolt and front seat outer belt shoulder anchor.

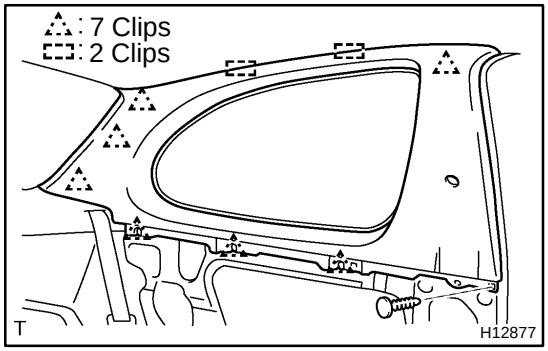

(c) Remove the clip.

(d) Insert a screwdriver between the roof side inner garnish and body to pry it out.

HINT:

Tape the screwdriver tip before use.

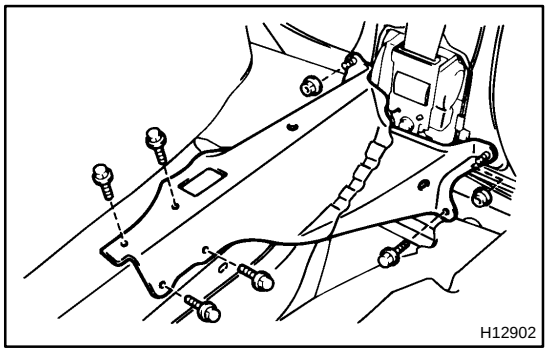

9. 2-Door vehicle:
REMOVE CENTER PILLAR TO FLOOR REINFORCEMENT

Remove the 5 bolts, 2 nuts and center pillar to floor reinforcement.

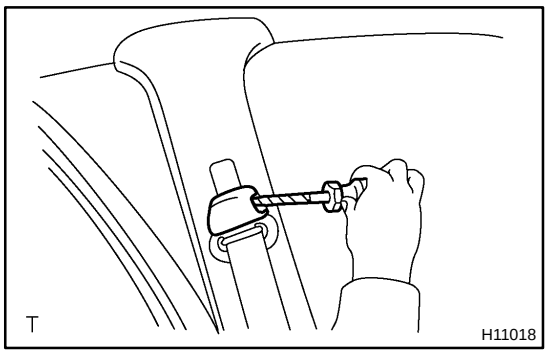

10. REMOVE FRONT SEAT OUTER BELT

CAUTION:

Never disassemble the front seat outer belt.

NOTICE:

When removing the retractor of front seat outer belt, take care not to pull the seat belt pretensioner wire harness.

(a) 4-Door vehicle:
Using a screwdriver, remove the seat belt shoulder anchor cover cap.

HINT:

Tape the screwdriver tip before use.

(b) 4-Door vehicle:
Remove the bolt and front seat outer belt shoulder anchor.

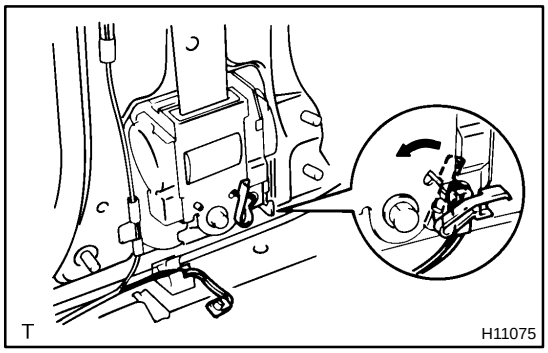

(c) Disconnect the pretensioner connector as shown in the illustration.

CAUTION:

When removing the seat belt pretensioner, work must be started 90 seconds after the ignition switch is turned to the "LOCK" position and the negative (-) terminal cable is disconnected from the battery.

(d) Remove the 2 bolts and retractor of front seat outer belt.

BO2HK-01

REPLACEMENT

REPLACE REQUIREMENTS

In the following cases, replace the seat belt pretensioner.

- If the seat belt pretensioner has been activated.
- If the seat belt pretensioner has been found to be faulty in troubleshooting.
- If the front seat outer belt has been found to be faulty during checking item 1-(b) or 2-(b) (See page BO-1 17).
- If the front seat outer belt has been dropped.

CAUTION:

For removal and installation of the seat belt pretensioner, see page BO-1 14 and BO-125 .
Be sure to follow the correct procedure.

SEAT BELT

COMPONENTS

BO2HF-03

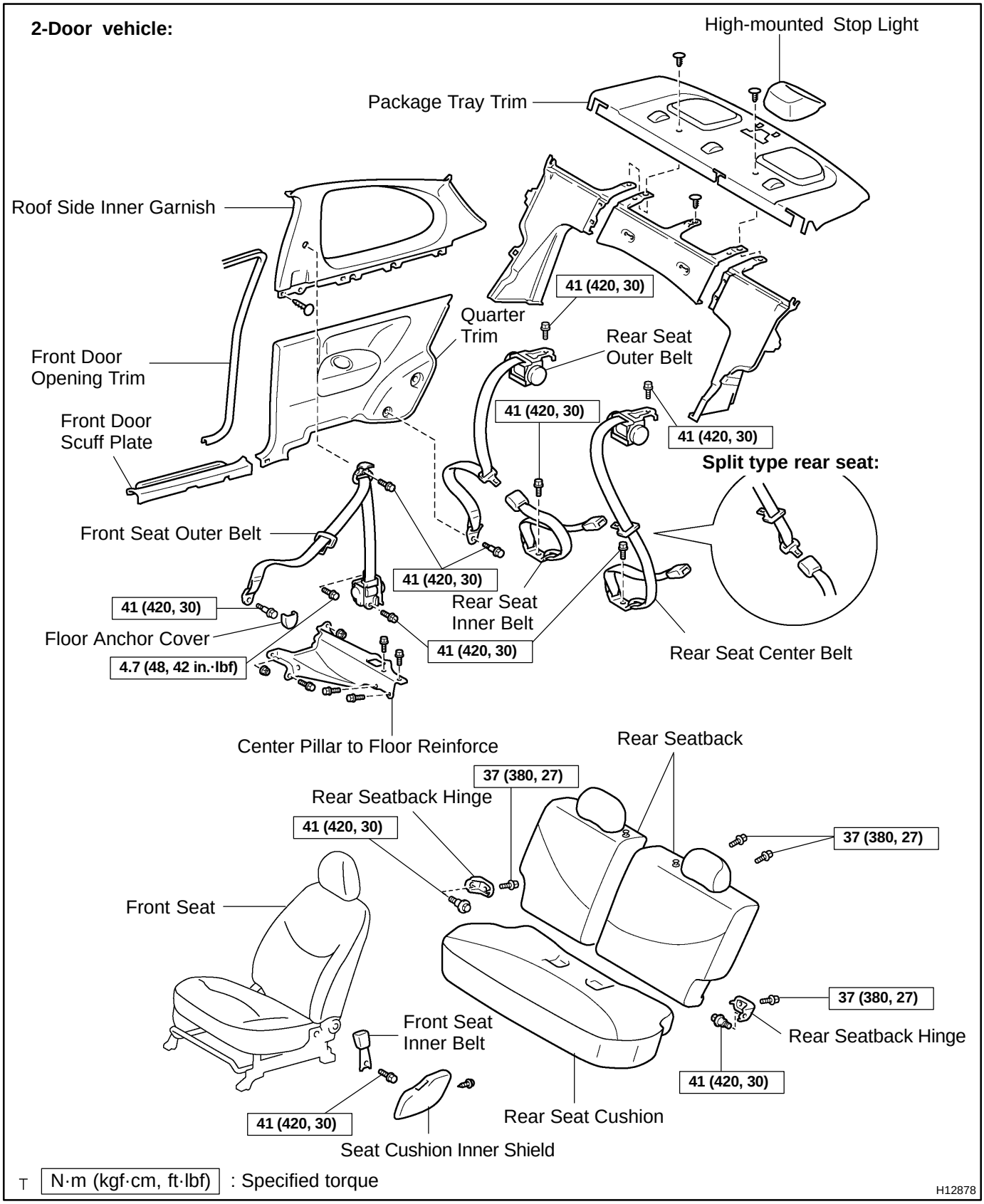

4-Door vehicle:

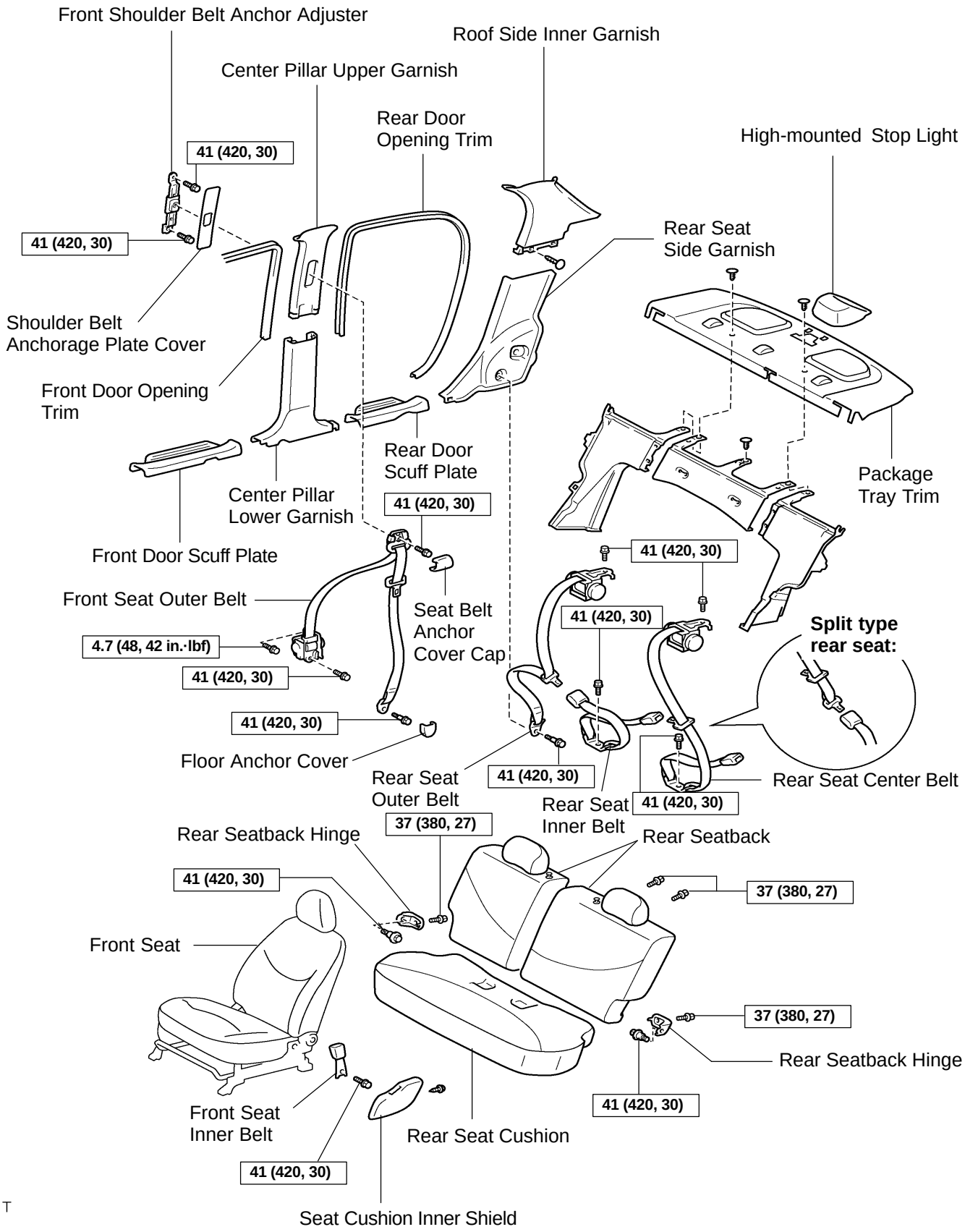

T

N·m (kgf·cm, ft·lbf) : Specified torque

H13427

BO2US-01

INSPECTION

CAUTION:

Replace the seat belt assembly (outer belt, inner belt, bolts, nuts or sill-bar) if it has been used in a severe impact. The entire assembly should be replaced even if damage is not obvious.

1. RUNNING TEST (IN SAFE AREA)

(a) Fasten the front seat belts.

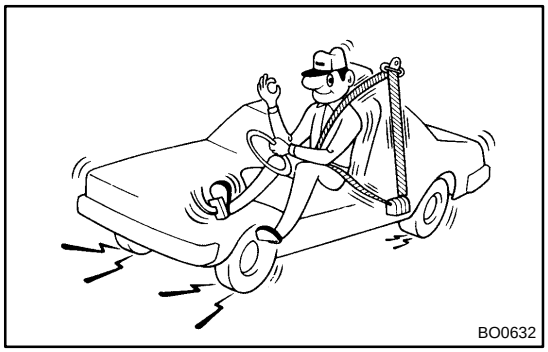
BO0632

(b) Drive the car at 10 mph (16 km/h) and slam on the brakes. Check that the belt locks and cannot be extended at this time.

HINT:

Conduct this test in a safe area. If the belt does not lock, remove the belt mechanism assembly and conduct the following static check. Also, whenever installing a new belt assembly, verify the proper operation before installation.

2. ELR/ Driver's seat:
STATIC TEST

(a) Make sure that the belt locks when pulled out quickly.

(b) Remove the locking retractor assembly.

(c) Tilt the retractor slowly.

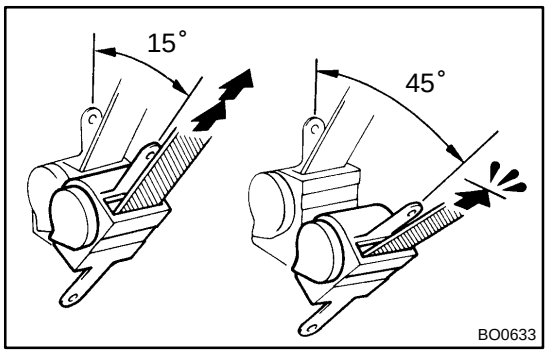

BO0633

(d) Make sure that the belt can be pulled out at a tilt of 15 degrees or less, and cannot be pulled out over 45 degrees of tilt.

If a problem is found, replace the assembly.

3. ELR, ALR/ Passenger's seat, Rear seat:
STATIC TEST

(a) Make sure that the belt locks when pulled out quickly.

(b) Remove the locking retractor assembly.

(c) Pull out the whole belt and measure the length of the whole belt.
Then retract the belt slightly and pull it out again.

(d) Make sure that the belt cannot be extended further.

If a problem is found, replace the assembly.

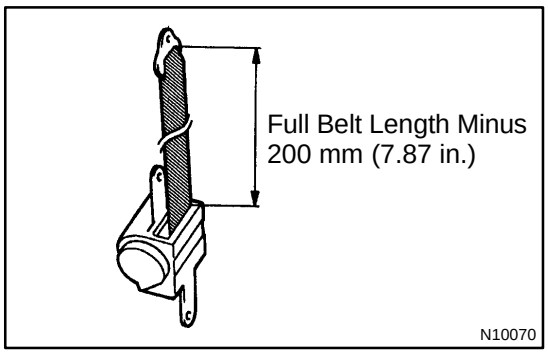

(e) Retract the whole belt, then pull out the belt until 200 mm (7.87 in.) of belt remains retracted.

(f) Tilt the retractor slowly.

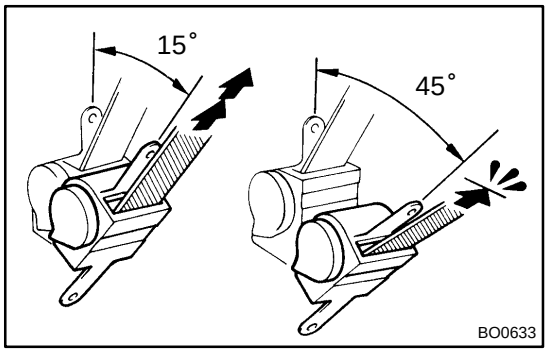

(g) Make sure that the belt can be pulled out at a tilt of 15 degrees or less, and cannot be pulled out at over 45 degrees of tilt.

If a problem is found, replace the assembly.

SPOILER

COMPONENTS

BO0WW-04

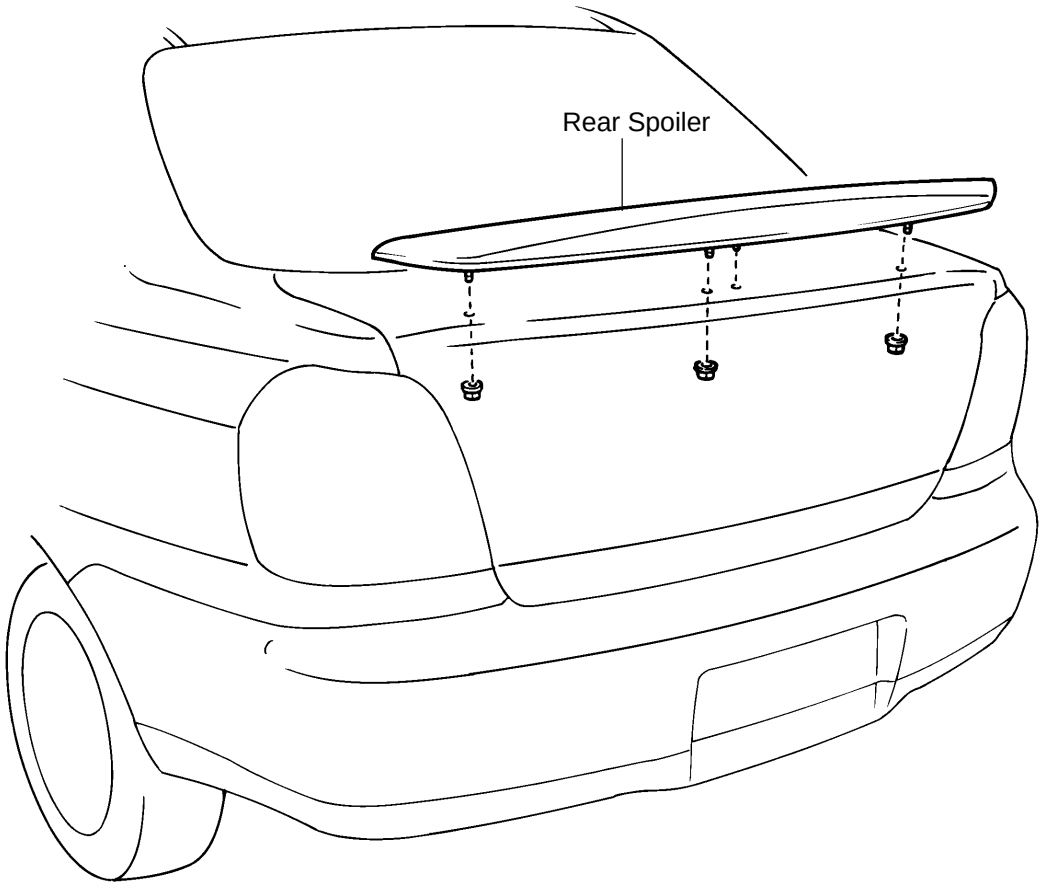

T

H12742

SRS AIRBAG

BO2HU-04

PRECAUTION

The ECHO is equipped with an SRS (Supplemental Restraint System) such as the driver airbag, front passenger airbag, seat belt pretensioner and side airbag. Failure to carry out service operation in the correct sequence could cause the SRS to unexpectedly deploy during servicing, possibly leading to a serious accident. Before servicing (including removal or installation of parts, inspection or replacement), be sure to read the precautionary notices in the RS section.

WINDSHIELD

COMPONENTS

BO2IC-03

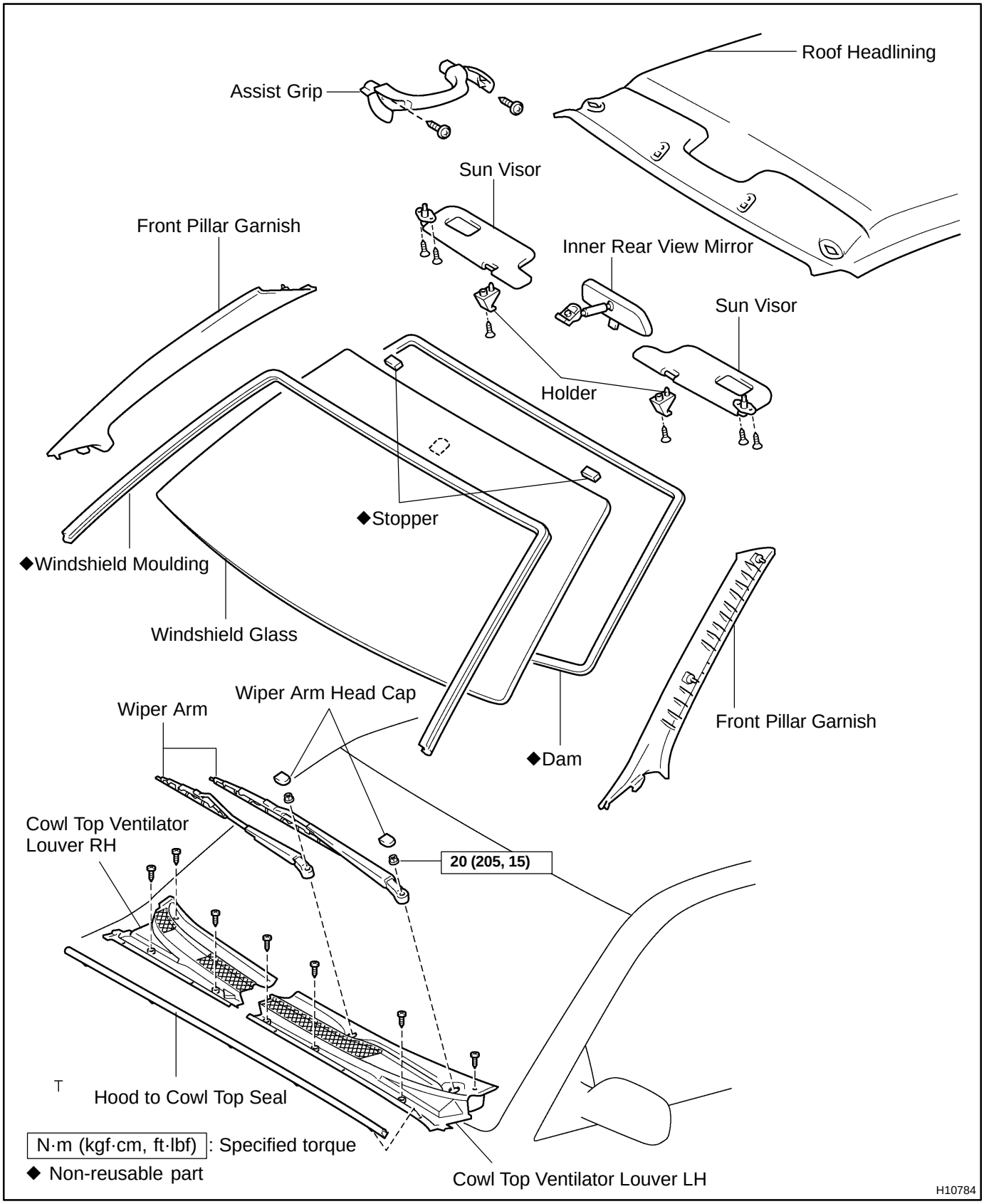

BO2IE-04

INSTALLATION

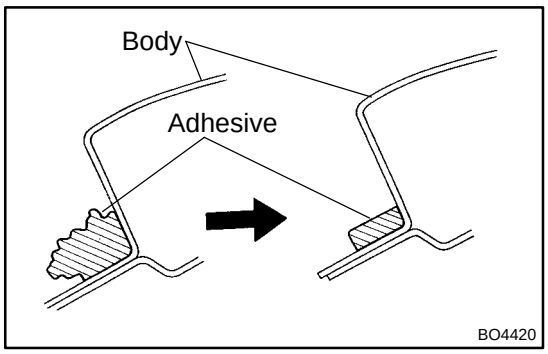

1. CLEAN AND SHAPE CONTACT SURFACE OF BODY

(a) Using a knife, cut away any rough areas on the body.

HINT:

Leave as much of the adhesive on the body as possible.

(b) Clean the cutting surface of the adhesive with a shop rag saturated in cleaner.

HINT:

Even if all the adhesive has been removed, clean the body.

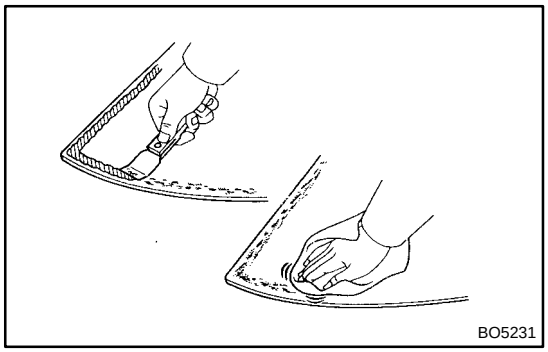

2. CLEAN REMOVED GLASS

(a) Using a scraper, remove the damaged stopper, dam and adhesive sticking to the glass.

(b) Clean the glass with cleaner.

NOTICE:

- **Do not touch the glass face after cleaning it.**
- **Be careful not to damage the glass.**

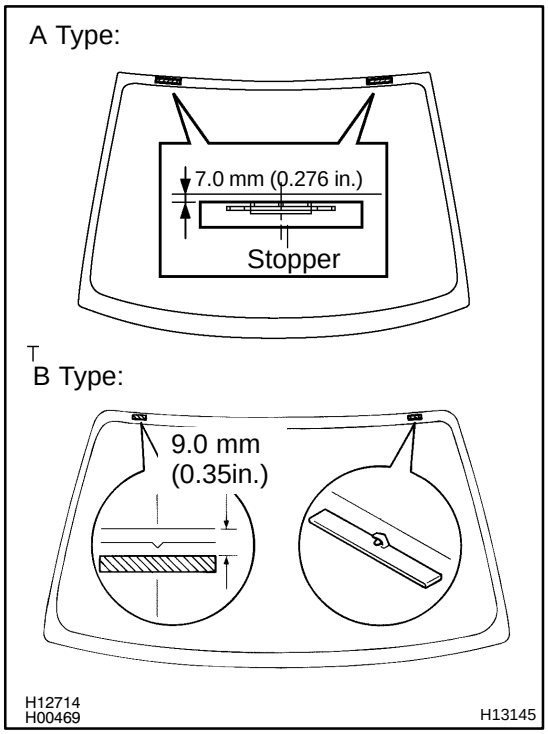

3. INSTALL NEW STOPPERS

Install new stoppers onto the glass.

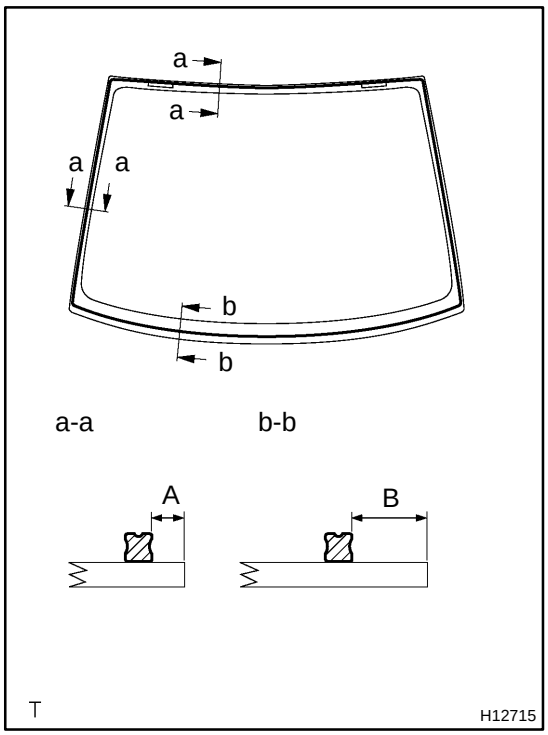

4. INSTALL NEW DAM

Install a new dam with adhesive tape as shown in the illustration.

A: 7.0 mm (0.276 in.)
B: 23.5 mm (0.925 in.)

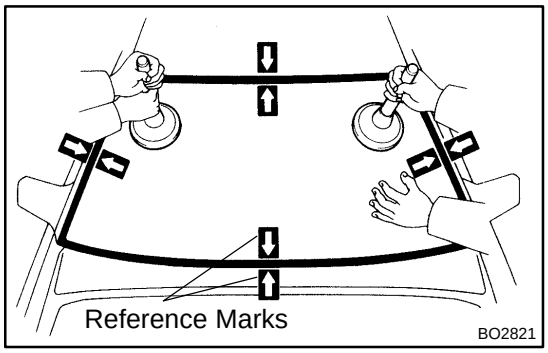

5. POSITION GLASS

(a) Using a suction rubber, place the glass in the correct position.
(b) Check that all contacting parts of the glass rim are perfectly even.
(c) Place reference marks between the glass and body.
(d) Remove the glass.

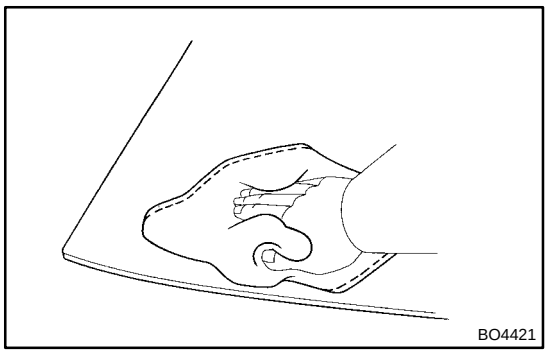

6. CLEAN CONTACT SURFACE OF GLASS

Using a cleaner, clean the contact surface which is black-colored area around the entire glass rim.

NOTICE:

Do not touch the glass face after cleaning it.

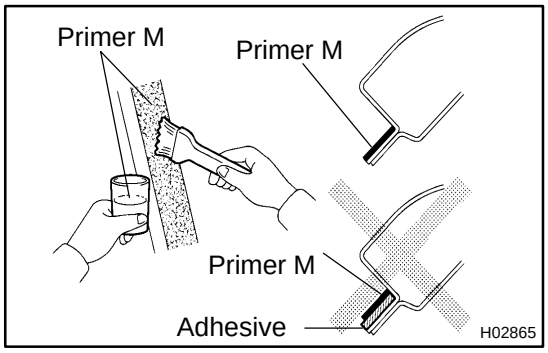

7. COAT CONTACT SURFACE OF BODY WITH PRIMER "M"

Using a brush, coat Primer M to the exposed part of body on the vehicle side.

NOTICE:

- **Let the primer coating dry for 3 minutes or more.**
- **Do not coat Primer M to the adhesive.**
- **Do not keep any of the opened Primer M for later use.**

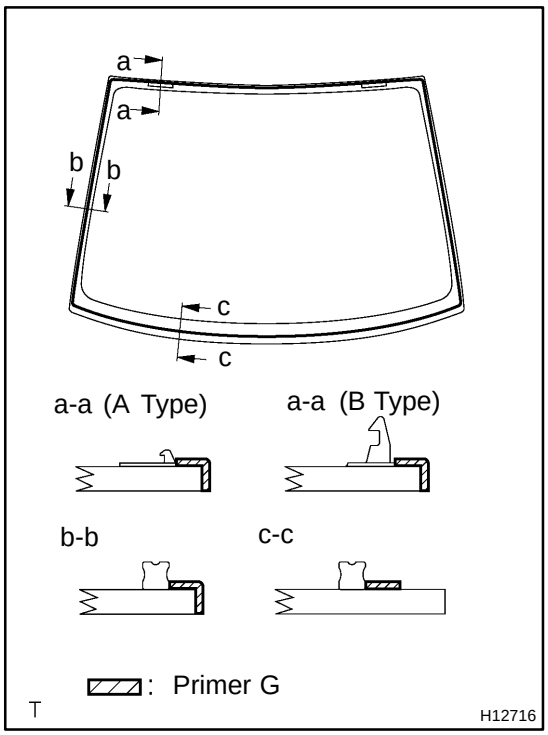

8. COAT CONTACT SURFACE OF GLASS WITH PRIMER "G"

(a) Using a brush or a sponge, coat the edge of the glass and the contact surface with Primer G.

(b) When the primer is coated wrongly to the area other than the specified, wipe it off with a clean shop rag before the primer dries.

NOTICE:

- **Let the primer coating dry for 3 minutes or more.**
- **Do not keep any of the opened Primer G for later use.**

9. APPLY ADHESIVE

(a) Cut off the tip of the cartridge nozzle.
Part No. 08850-00801 or equivalent

HINT:

After cutting off the tip, use all adhesive within the time described in the table below.

Temperature	Tackfree time
35 ˚C (95 ˚F)	15 minutes
20 ˚C (68 ˚F)	100 minutes
5 ˚C (41 ˚F)	8 hours

(b) Load the cartridge into the sealer gun.

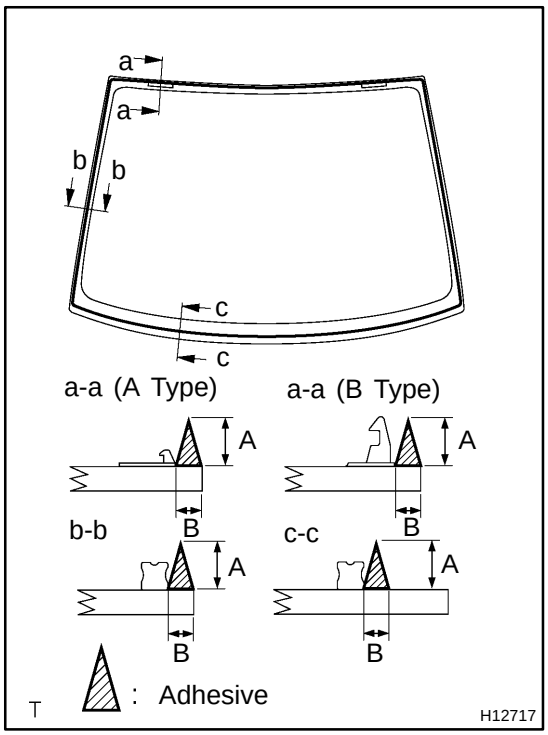

(c) Coat the glass with adhesive as shown.
A: 12.5 mm (0.492 in.)
B: 8.0 mm (0.315 in.)

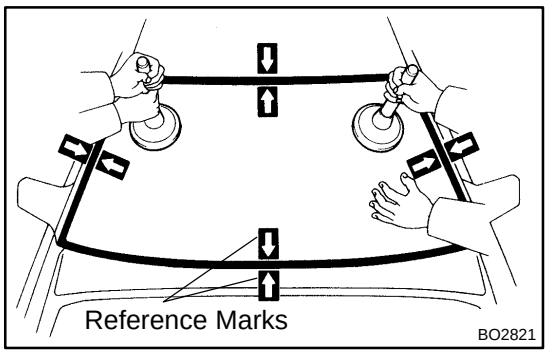

10. INSTALL WINDSHIELD GLASS AND MOULDING

(a) Install the glass, aligning the reference marks using a suction rubber.

HINT:

Check to see that the stoppers are attached to the body correctly.

(b) Lightly press the glass front surface for close contact.

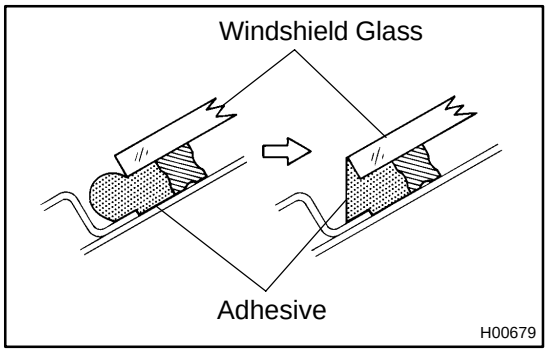

(c) Correct insufficient or protruded adhesive agent using a spatula.

HINT:

Apply the adhesive agent up to the windshield glass edge.

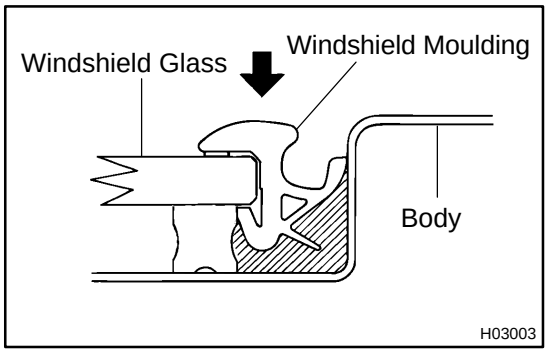

(d) Install a new windshield moulding to the windshield glass before the adhesive agent hardens.

HINT:

Install the moulding, aligning the center of moulding with the center of body.

(e) Remove any excessive adhesive agent before it hardens.

(f) Hold the glass and moulding in place securely with a protective tape or equivalent until the adhesive hardens.

NOTICE:

Take care not to drive the vehicle during the time described in the table below.

Temperature	Minimum time prior to driving the vehicle
35 ˚C (95 ˚F)	1.5 hours
20 ˚C (68 ˚F)	5 hours
5 ˚C (41 ˚F)	24 hours

11. INSPECT FOR LEAK AND REPAIR

NOTICE:

Conduct a leak test after the hardening time has elapsed.

12. INSTALL FRONT SIDE OF ROOF HEADLINING
(See page BO-88 or BO-93)

13. INSTALL ASSIST GRIP

14. INSTALL COWL TOP VENTILATOR LOUVERS AND HOOD TO COWL TOP SEAL

15. INSTALL WIPER ARMS

(a) Operate the wiper motor once and turn the wiper switch OFF.

(b) Install the wiper arms and tighten nuts by hand.

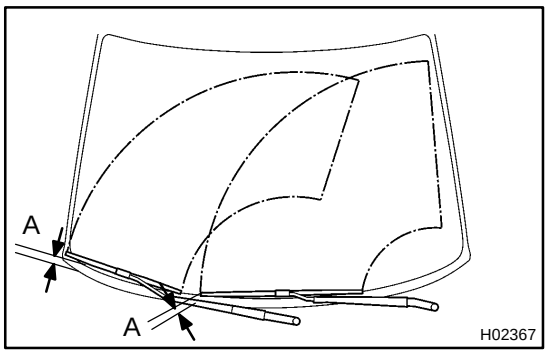

(c) Adjust the installation positions of the wiper arms to the positions as shown in the illustration.
A: Approx. 34 mm (1.34 in.)

(d) Torque the nuts.
Torque: 20 N·m (205 kgf·cm, 15 ft·lbf)

(e) Install the 2 wiper arm head caps.

16. INSTALL FRONT PILLAR GARNISHES

17. INSTALL SUN VISORS AND HOLDERS

18. INSTALL INNER REAR VIEW MIRROR

BO2ID-06

REMOVAL

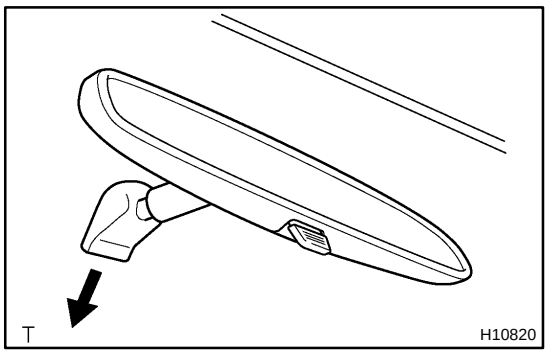

1. REMOVE INNER REAR VIEW MIRROR

2. REMOVE SUN VISORS AND HOLDERS

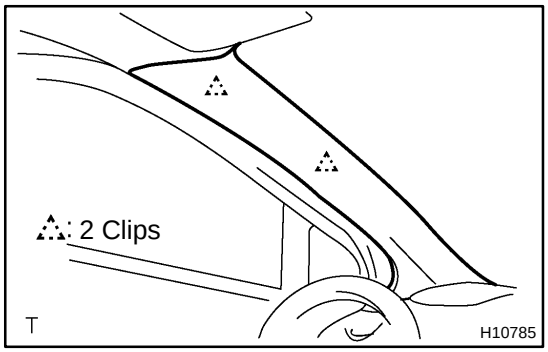

3. REMOVE FRONT PILLAR GARNISH

(a) Pry out clips by your hand.

(b) Pull the garnish upward to remove it.

(c) Use the same manner described above to the other side.

4. REMOVE WIPER ARMS

Remove the 2 wiper arm head caps, 2 nuts and 2 wiper arms.

5. REMOVE COWL TOP VENTILATOR LOUVERS

(a) Remove the hood to cowl top seal.

(b) Remove the 7 clips, then pull out the cowl top ventilator louver RH and LH.

6. REMOVE ASSIST GRIP

7. REMOVE FRONT SIDE OF ROOF HEADLINING

(See page BO-86 or BO-90)

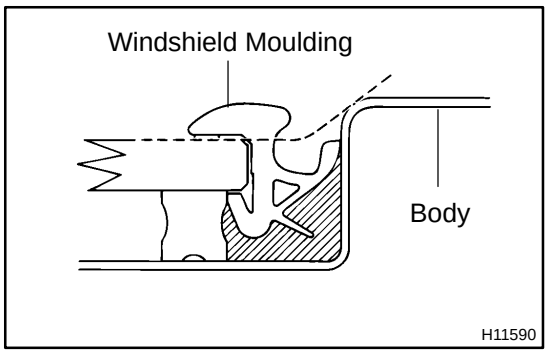

8. REMOVE WINDSHIELD MOULDING

(a) Using a knife, cut off the moulding as shown.

NOTICE:

Do not damage the body with the knife.

(b) Remove the remaining moulding.

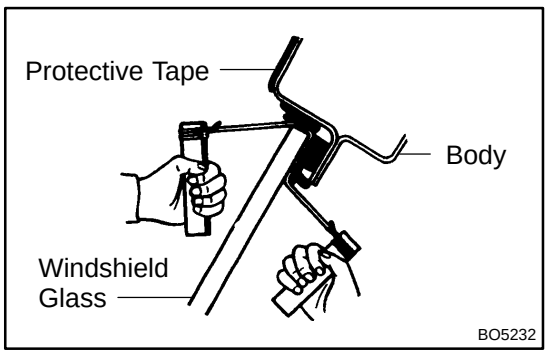

9. REMOVE WINDSHIELD GLASS

(a) Push piano wire through between the body and glass from the interior.

(b) Tie both wire ends to wooden blocks or similar objects.

HINT:

Apply protective tape to the outer surface to keep the surface from being scratched.

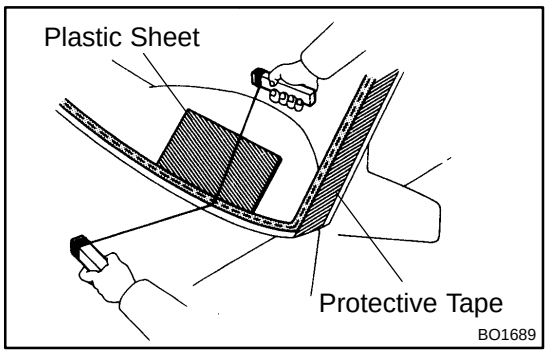

NOTICE:
When separating the glass, be careful not to damage the paint and interior and exterior ornaments. To prevent scratching the safety pad when removing the windshield, place a plastic sheet between the piano wire and safety pad.

BR0S1-07

COMPONENTS

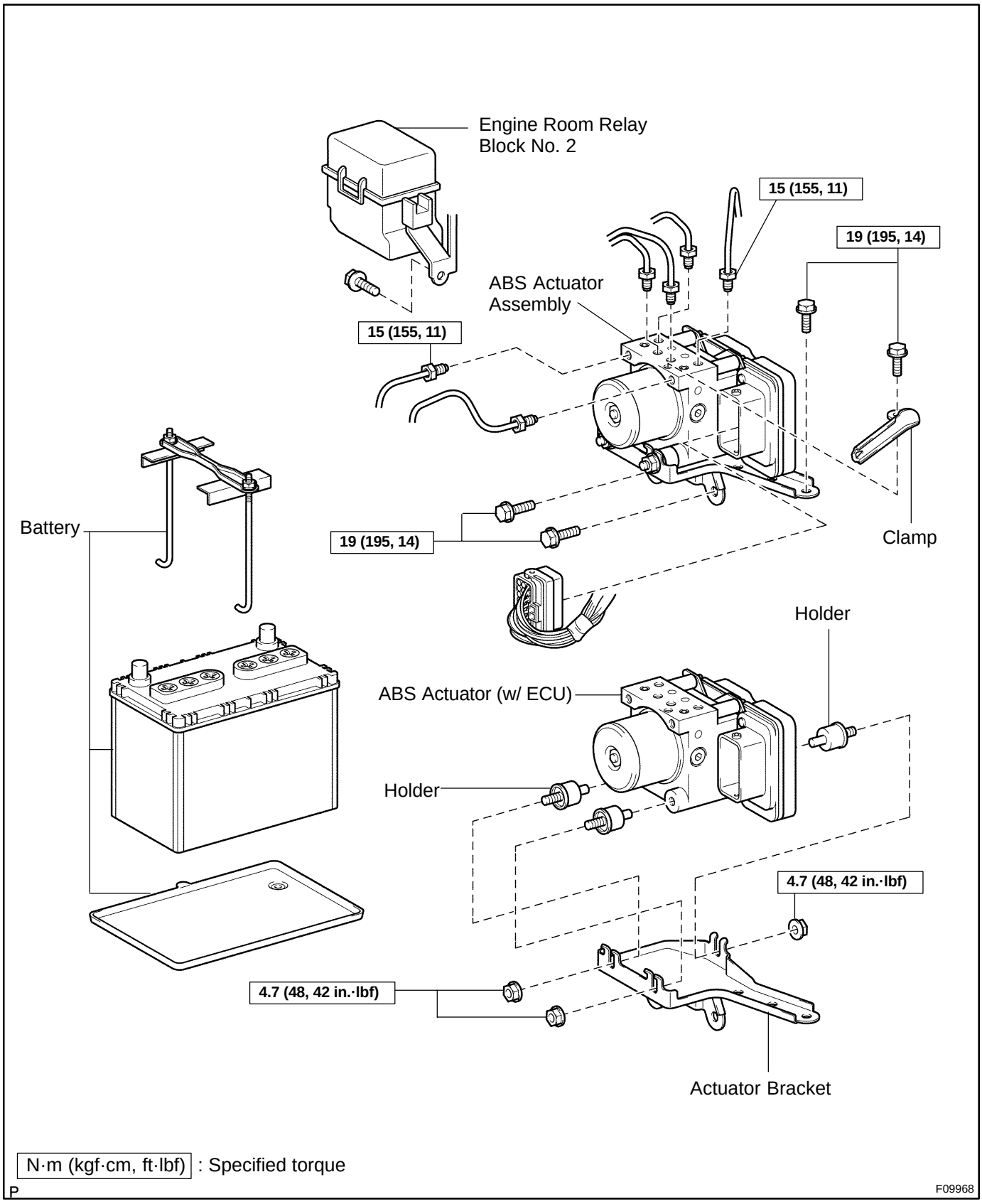

BR0S3-05

INSTALLATION

Installation is in the reverse order of removal (See page BR-36).

HINT:

- After installation, fill the brake reservoir with brake fluid and bleed brake system (See page BR-4).
- Check for leaks.

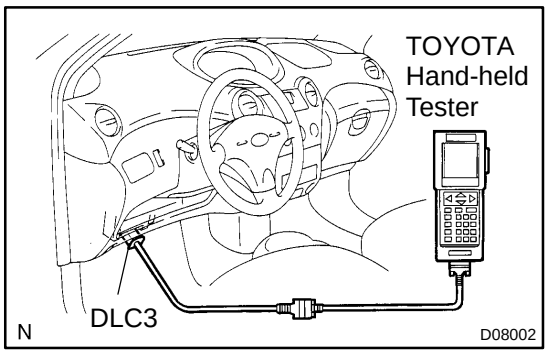

ABS ACTUATOR

BR0WF-05

ON-VEHICLE INSPECTION

1. CONNECT TOYOTA hand-held tester

(a) Connect the TOYOTA hand-held tester to the DLC3.

(b) Start the engine and run it at idle.

(c) Select the ACTIVE TEST mode on the TOYOTA hand-held tester.

HINT:

Please refer to the TOYOTA hand-held tester operator's manual for further details.

2. INSPECT ABS ACTUATOR MOTOR OPERATION

(a) Check that the operation sound of the ABS actuator motor can be heard when the motor relay is turned ON by the TOYOTA hand-held tester.

NOTICE:

Do not keep motor relay ON for more than 5 seconds continuously. When operating it continuously, set the interval of more than 20 seconds.

If the operation sound can not be heard, replace the ABS actuator because the motor operation is in failure.

(b) Turn the motor relay OFF.

3. INSPECT RIGHT FRONT WHEEL SOLENOID

(a) Depress the brake pedal and hold it for about 15 seconds, and check that the brake pedal does not go down further.

If the brake pedal goes down, replace the ABS actuator because the sealing condition of the reduction solenoid valve is abnormal.

(b) Check that the brake pedal does not pulsate when the motor relay is turned ON by the TOYOTA hand-held tester.

NOTICE:

Do not keep motor relay ON for more than 5 seconds continuously. When operating it continuously, set the interval of more than 20 seconds.

If there is a pulsation in the brake pedal, replace the ABS actuator because the sealing condition of the reduction solenoid valve is abnormal.

(c) Turn the motor relay OFF.

(d) Depress the brake pedal and hold it until the step (g) is completed.

(e) Check that the brake pedal does not go down further when the SFRH and SFRR solenoids are turned ON by the TOYOTA hand-held tester.

NOTICE:

Do not keep solenoid ON for more than 2 seconds continuously. When operating it continuously, set the interval of more than 20 seconds.

If the brake pedal goes down, replace the ABS actuator because the holding solenoid valve operation is abnormal.

HINT:
To prevent the solenoids, TOYOTA hand-held tester turns OFF automatically 2 secs. after has been turned ON simultaneously.

(f) Check that the brake pedal goes down further when the solenoids are turned OFF.

If the brake pedal does not go down, replace the ABS actuator because the reduction solenoid valve operation is abnormal.

(g) Check that the brake pedal returns when the motor relay is turned ON by the TOYOTA hand-held tester.

NOTICE:

Do not keep motor relay ON for more than 5 seconds continuously. When operating it continuously, set the interval of more than 20 seconds.

If the brake pedal does not return, replace the ABS actuator because the motor operation is in failure.

(h) Turn the motor relay OFF and release the brake pedal.

4. INSPECT OTHER WHEEL SOLENOIDS OPERATION

Check the solenoids of the other wheels with the same inspection procedure as the right front wheel solenoids.

HINT:
Left front wheel: SFLH and SFLR
Right rear wheel: SRRH and SRRR
Left rear wheel: SRLH and SRLR

NOTICE:

Never depress the brake pedal under the condition that the reduction solenoid alone is turned ON as ABS ECU is reset.

5. CLEAR DTC (See page DI-201)

BR0S2-06

REMOVAL

1. DISCONNECT CONNECTOR FROM ABS ACTUATOR ASSEMBLY

2. REMOVE BATTERY

3. REMOVE NUTS OF ENGINE ROOM RELAY BLOCK NO. 2, AND MOVE ENGINE ROOM RELAY BLOCK NO. 2 ASIDE

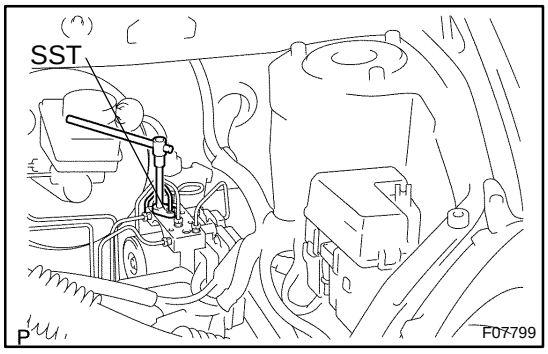

4. DISCONNECT BRAKE LINES

Using SST, disconnect the 6 brake lines from the ABS actuator assembly.

SST 09023-00100

Torque: 15 N·m (155 kgf·cm, 11 ft·lbf)

5. REMOVE ABS ACTUATOR ASSEMBLY

Remove the 3 bolts and ABS actuator assembly.

Torque: 19 N·m (195 kgf·cm, 14 ft·lbf)

6. REMOVE ABS ACTUATOR

(a) Remove the 3 nuts and ABS actuator from the actuator bracket.

Torque: 4.7 N·m (48 kgf·cm, 42 in.·lbf)

(b) Remove the 3 holders from the ABS actuator.

7. REMOVE BOLT AND CLAMP FROM ABS ACTUATOR

Torque: 19 N·m (195 kgf·cm, 14 ft·lbf)

BR18K-01

COMPONENTS

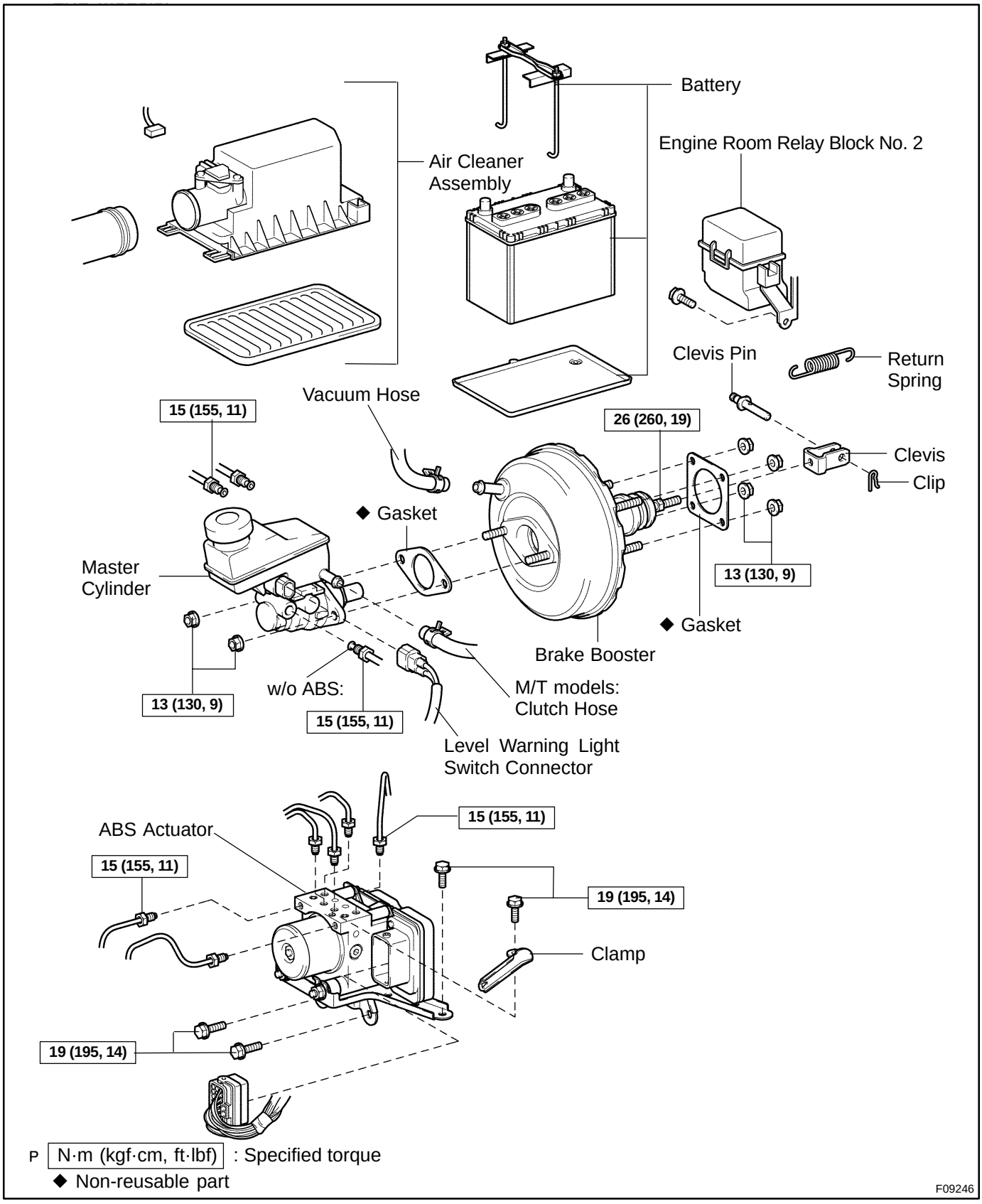

BR1MD-01

INSTALLATION

1. INSTALL BRAKE BOOSTER

(a) Install the booster and a new gasket.

(b) Install and and torque the booster installation nuts.
Torque: 13 N·m (130 kgf·cm, 9 ft·lbf)

(c) Install the clevis, and torque the lock nut.
Torque: 26 N·m (260 kgf·cm, 19 ft·lbf)

(d) Insert the clevis pin into the clevis and brake pedal, and install the clip to the clevis pin.

(e) Install the return spring.

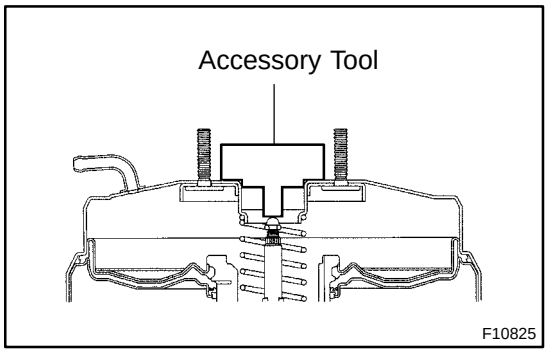

2. When replacing the brake master cylinder only: ADJUST LENGTH OF BRAKE BOOSTER PUSH ROD

(a) Apply chalk to the tip of an accessory tool.

(b) Place the accessory tool to the brake booster.

(c) Measure the clearance between the brake booster push rod and accessory tool.
Clearance: 0 mm (0 in.)

HINT:

Adjust the clearance in following cases:

- If there is a clearance between the accessory tool and the shell of the booster (floating accessory tool), the clearance is small.
- If the chalk does not stick on the tip of the push rod, the clearance is large.

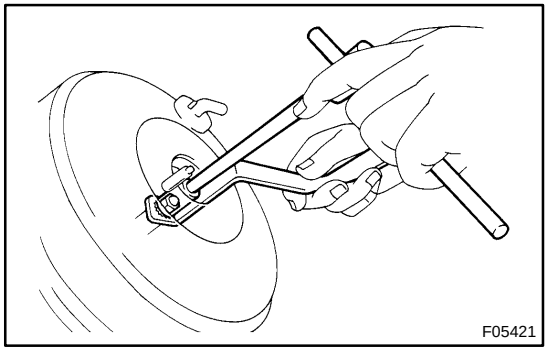

(d) If the clearance is outside of the specified range, fix the push rod using SST and adjust the length of the protruding adjusting bolt.
SST 09737-00020

NOTICE:

Make an adjustment with the booster having no vacuum. (Depress the brake pedal several times with the engine stopped.)

3. CONNECT VACUUM HOSE TO BRAKE BOOSTER

4. INSTALL ABS ACTUATOR (See page BR-36)

5. **INSTALL AIR CLEANER ASSEMBLY**
6. **INSTALL MASTER CYLINDER (See page BR-12)**
7. **FILL BRAKE RESERVOIR WITH BRAKE FLUID AND BLEED BRAKE SYSTEM (See page BR-4)**
8. **CHECK FOR LEAKS**
9. **CHECK AND ADJUST BRAKE PEDAL (See page BR-6)**
10. **DO OPERATIONAL CHECK (See page BR-13)**

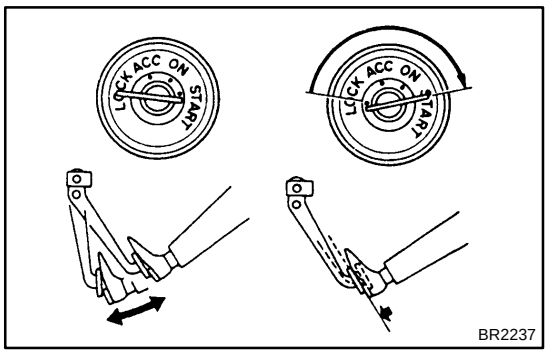

BRAKE BOOSTER ASSEMBLY

BR0RJ-04

ON-VEHICLE INSPECTION

1. OPERATING CHECK

(a) Depress the brake pedal several times with the engine off and check that there is no change in the pedal reserve distance.

(b) Depress the brake pedal and start the engine. If the pedal goes down slightly, operation is normal.

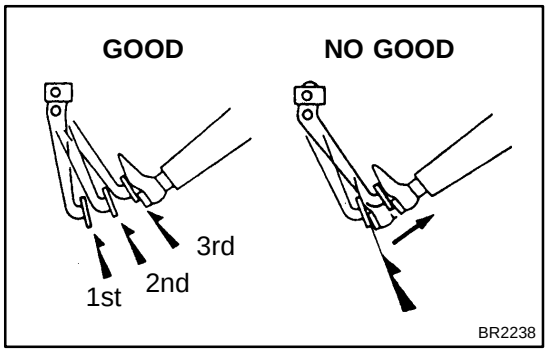

2. AIR TIGHTNESS CHECK

(a) Start the engine and stop it after 1 or 2 minutes. Depress the brake pedal several times slowly.

If the pedal goes down farthest the 1st time, but gradually rises after the 2nd or 3rd time, the booster is air tight.

(b) Depress the brake pedal while the engine is running, and stop the engine with the pedal depressed. If there is no change in the pedal reserve travel after holding the pedal for 30 seconds, the booster is air tight.

BR18L-01

REMOVAL

1. **REMOVE MASTER CYLINDER (See page BR-11)**
2. **REMOVE AIR CLEANER ASSEMBLY**
3. **REMOVE ABS ACTUATOR (See page BR-36)**
4. **DISCONNECT VACUUM HOSE FROM BRAKE BOOSTER**
5. **REMOVE RETURN SPRING**
6. **REMOVE CLIP AND CLEVIS PIN**

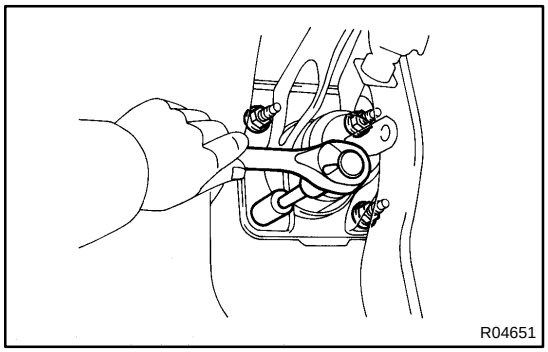
R04651

7. **REMOVE BRAKE BOOSTER**

(a) Remove the 4 nuts and clevis.

(b) Pull out the brake booster and gasket.

BR112-03

BRAKE MASTER CYLINDER

COMPONENTS

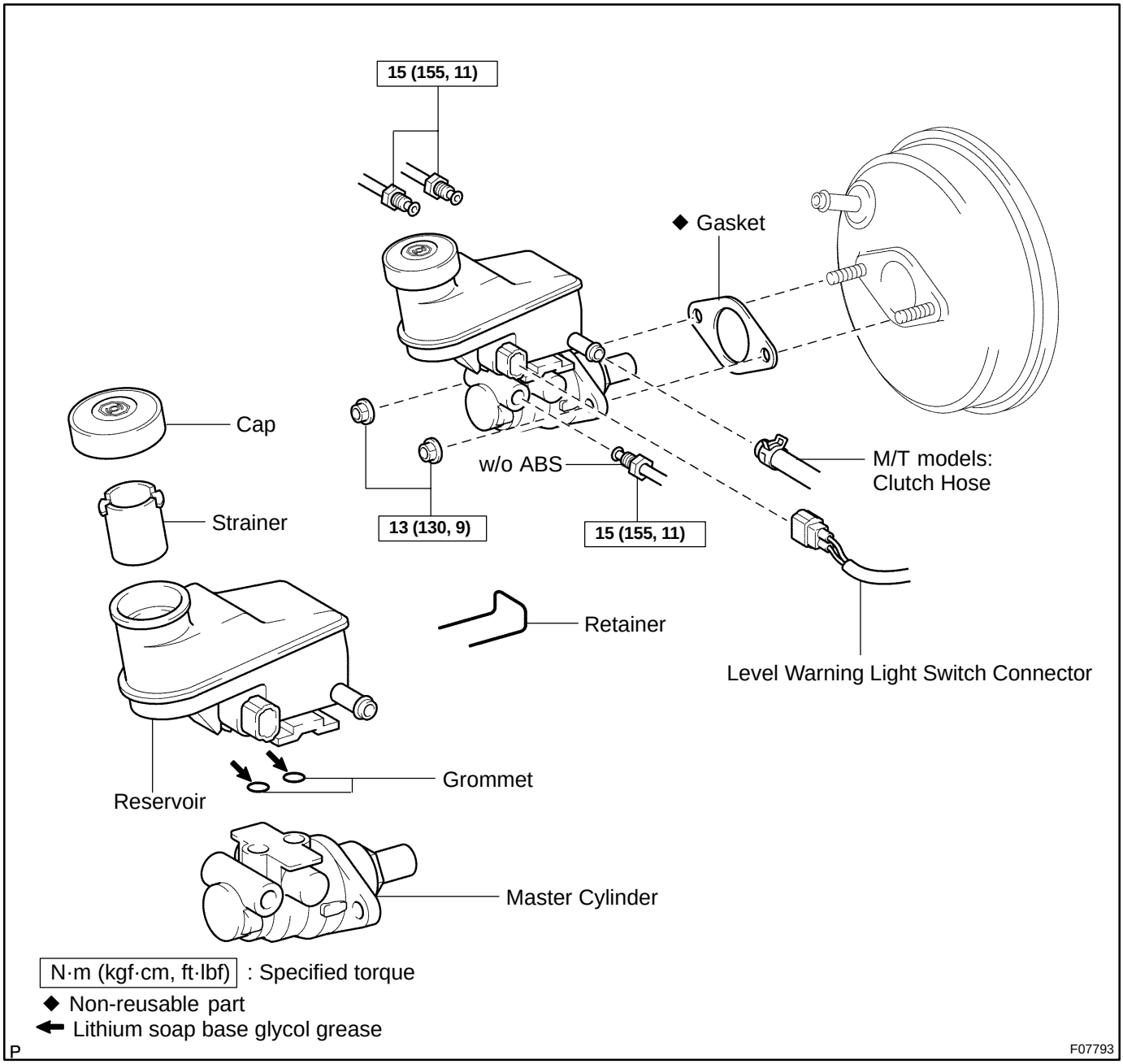

BR114-02

INSTALLATION

Installation is in the reverse order of removal (See page BR-12).

HINT:

- Before installation, adjust length of brake booster push rod (See page BR-16).
- After installation, fill the brake reservoir with brake fluid and bleed brake system (See page BR-4).
- Check for leaks, check and adjust brake pedal (See page BR-6).

BR18A-02

REMOVAL

1. DISCONNECT LEVEL WARNING SWITCH CONNECTOR

2. DRAW OUT FLUID WITH SYRINGE

NOTICE:

Do not let brake fluid remain on a painted surface. Wash it off immediately.

3. M/T models:
DISCONNECT CLUTCH HOSE FROM RESERVOIR

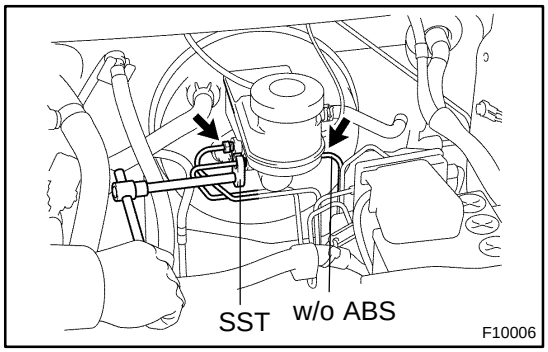

4. DISCONNECT BRAKE LINES

Using SST, disconnect the 2 or 3 brake lines from the master cylinder.

SST 09023-00100

Torque: 15 N·m (155 kgf·cm, 11 ft·lbf)

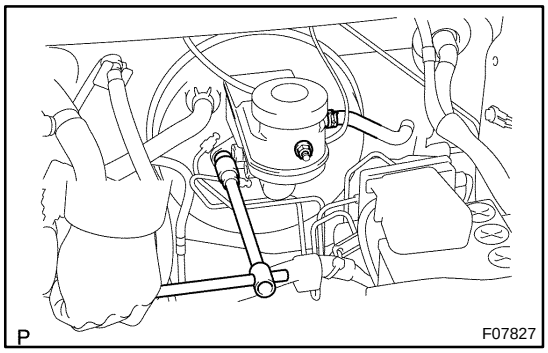

5. REMOVE MASTER CYLINDER

Remove the 2 mounting nuts, and pull out the master cylinder and gasket.

Torque: 13 N·m (130 kgf·cm, 9 ft·lbf)

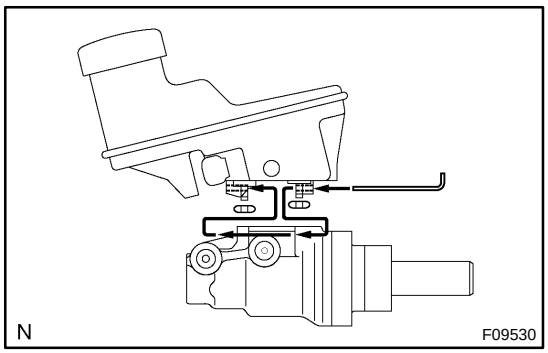

6. REMOVE RESERVOIR

(a) Pull out the reservoir stopper.

HINT:

At the time of installation, make sure to insert the reservoir stopper through holes of the reservoir and the master cylinder groove.

(b) Remove the reservoir and 2 grommets.

(c) Remove the cap and strainer from the reservoir.

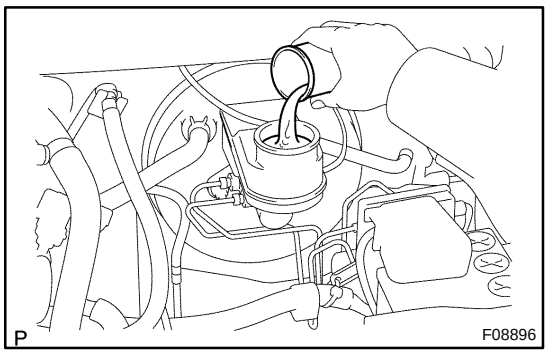

BRAKE FLUID

BR0RA-05

BLEEDING

HINT:

If any work is done on the brake system or air in the brake lines is suspected, bleed the air from the system.

NOTICE:

Do not let brake fluid remain on a painted surface. Wash it off immediately.

1. FILL BRAKE RESERVOIR WITH BRAKE FLUID

Fluid: SAE J1703 or FMVSS No. 116 DOT3

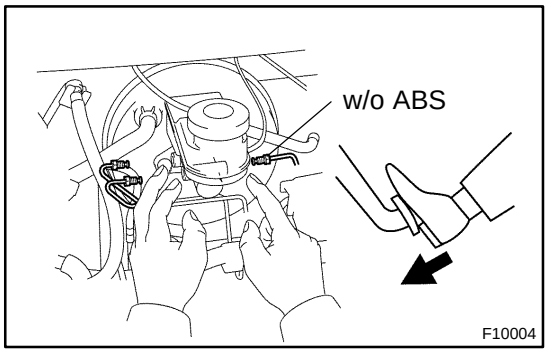

2. BLEED MASTER CYLINDER

HINT:

If the master cylinder has been disassembled or the reservoir becomes empty, bleed the master cylinder.

(a) Disconnect the 2 or 3 brake lines from the master cylinder.

(b) Slowly depress the brake pedal and hold it.

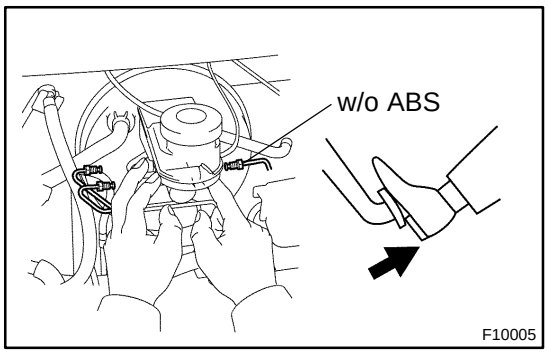

(c) Block off the outer plug with your finger and release the brake pedal.

(d) Repeat (b) and (c) 3 or 4 times.

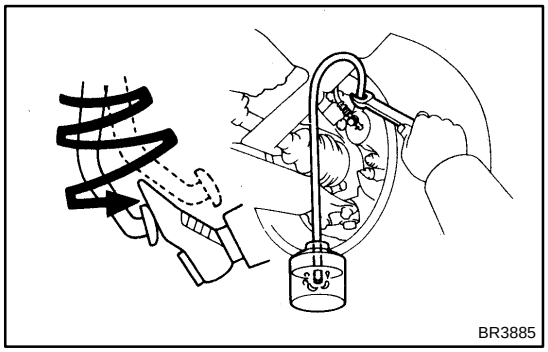

3. BLEED BRAKE LINE

(a) Connect the vinyl tube to the caliper or wheel cylinder.

(b) Depress the brake pedal several times, then loosen the bleeder plug with the pedal held down.

(c) At the point when fluid stops coming out, tighten the bleeder plug, then release the brake pedal.

(d) Repeat (b) and (c) until all the air in the fluid has been bled out.

(e) Repeat the above procedure to bleed the brake line for each wheel.

Torque: (Bleeder plug) 8.3 N·m (85 kgf·cm, 73 in.·lbf)

4. CHECK FLUID LEVEL IN RESERVOIR

Check the fluid level and add fluid if necessary.

Fluid: SAE J1703 or FMVSS No. 116 DOT3

BR18J-01

COMPONENTS

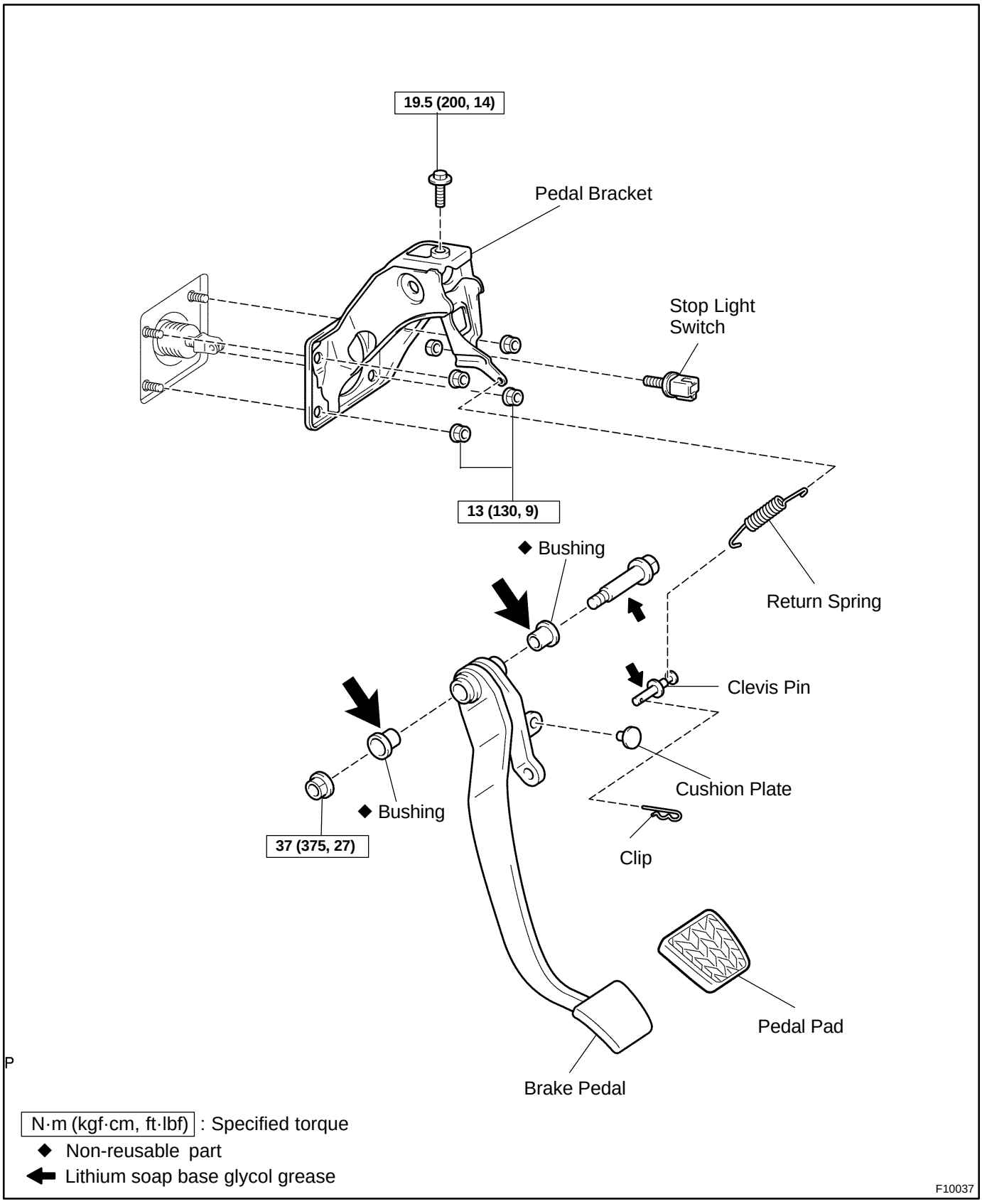

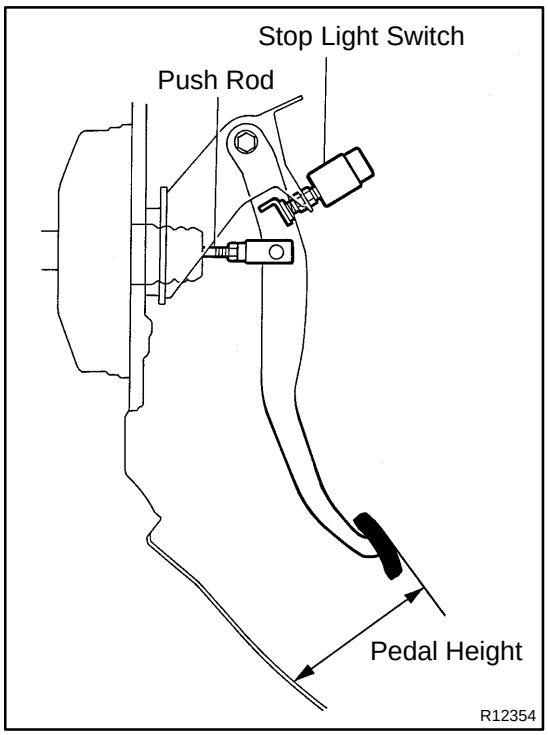

BRAKE PEDAL

BR0RB-07

ON-VEHICLE INSPECTION

1. CHECK PEDAL HEIGHT

Pedal height from dash panel:
124.3 - 134.3 mm (4.894 - 5.287 in.)

If the pedal height is incorrect, adjust it.

2. IF NECESSARY, ADJUST PEDAL HEIGHT

(a) Disconnect the connector from the stop light switch.
(b) Loosen the stop light switch lock nut and remove the stop light switch.
(c) Loosen the push rod lock nut.
(d) Adjust the pedal height by turning the pedal push rod.
(e) Tighten the push rod lock nut.
Torque: 26 N·m (260 kgf·cm, 20 ft·lbf)
(f) Install the stop light switch.
(g) Connect the connector to the stop light switch.
(h) Push the brake pedal in 5 - 15 mm (0.20 - 0.59 in.), turn the stop light switch to lock the nut in the position where the stop light goes off.
(i) Push the brake pedal in 5 - 15 mm (0.20 - 0.59 in.), check that stop light lights up.
(j) After adjusting the pedal height, check the pedal free play.

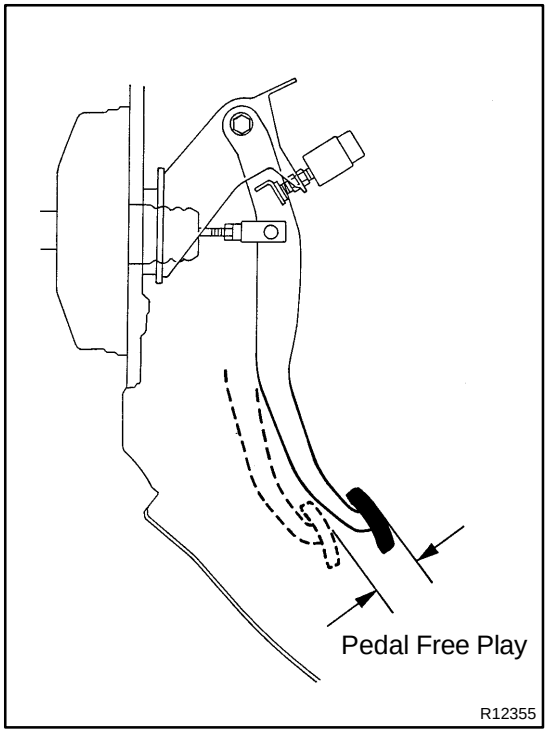

3. CHECK PEDAL FREE PLAY

(a) Stop the engine and depress the brake pedal several times until there is no more vacuum left in the booster.
(b) Push in the pedal by hand until the resistance begins to be felt, then measure the distance, as shown.
Pedal free play: 1 - 3 mm (0.04 - 0.12 in.)

If incorrect, check the stop light switch clearance. If the clearance is OK, then troubleshoot the brake system.

Stop light switch clearance:
0.5 - 2.4 mm (0.020 - 0.094 in.)

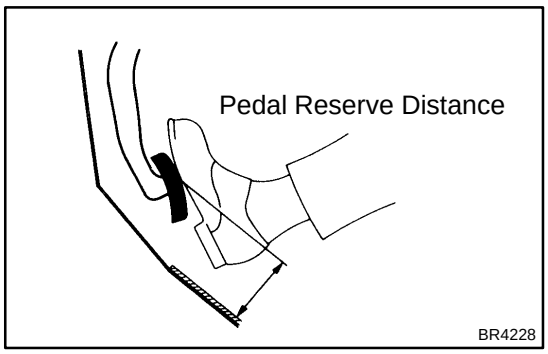

4. CHECK PEDAL RESERVE DISTANCE

Release the parking brake lever.

With the engine running, depress the pedal and measure the pedal reserve distance, as shown.

Pedal reserve distance from dash panel at 490 N (50 kgf, 110.2 lbf):

More than 48 mm (1.89 in.)

If the reserve distance is incorrect, troubleshoot the brake system.

BRAKE SYSTEM

BR0R8-01

PRECAUTION

- **Care must be taken to replace each part properly as it could affect the performance of the brake system and result in a driving hazard. Replace the parts with parts having the same part number or equivalent.**
- **It is very important to keep parts and the area clean when repairing the brake system.**
- **If the vehicle is equipped with a mobile communication system, refer to the precaution in the IN section.**

FRONT BRAKE CALIPER

BR0RP-05

COMPONENTS

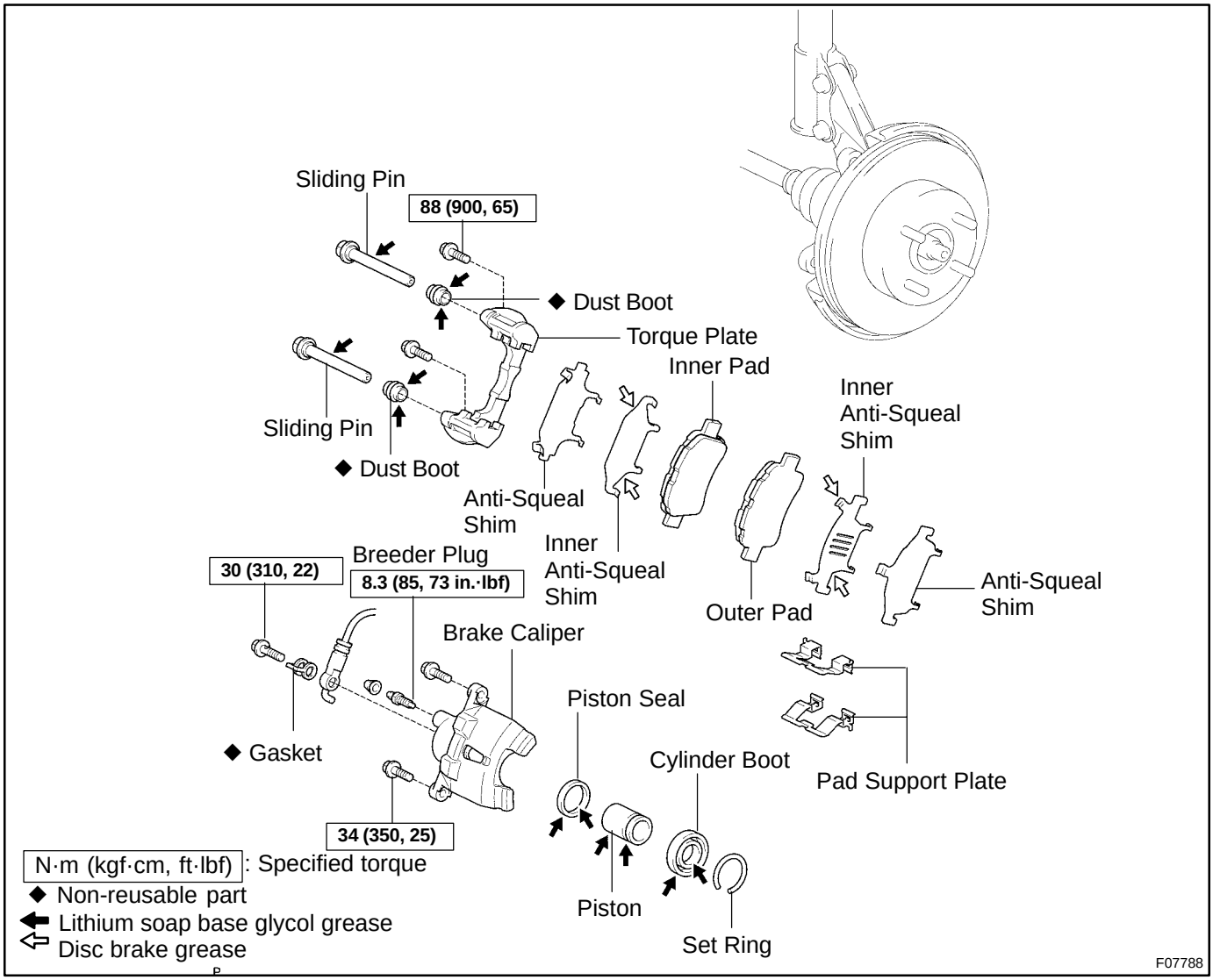

BR11E-02

DISASSEMBLY

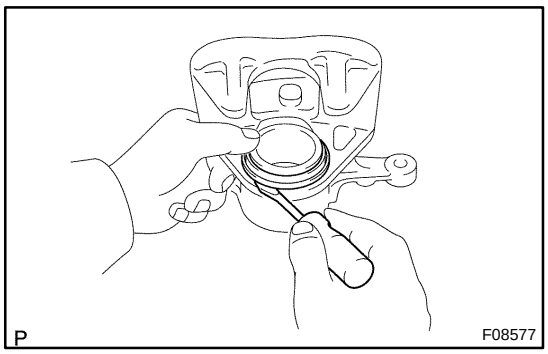

1. REMOVE SET RING AND CYLINDER BOOT

Using a screwdriver, remove the set ring and cylinder boot from the caliper.

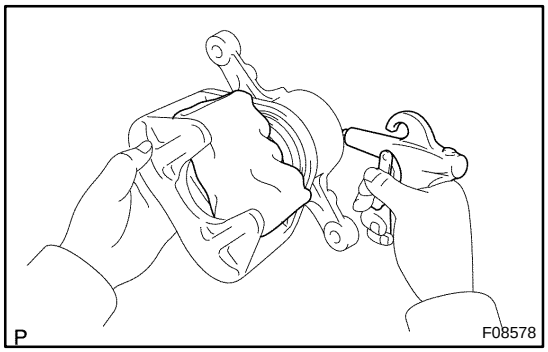

2. REMOVE PISTON

(a) Place a piece of cloth or similar, between the piston and the caliper.

(b) Use compressed air to remove the piston from the cylinder.

CAUTION:

Do not place your fingers in front of the piston when using compressed air.

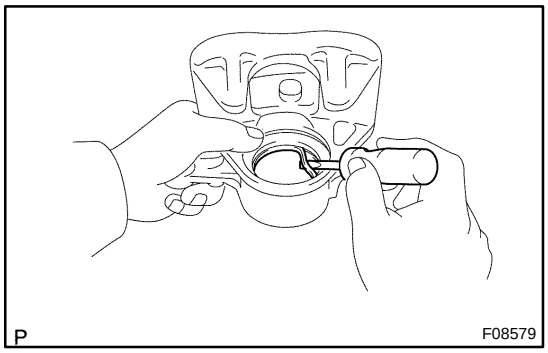

3. REMOVE PISTON SEAL

Using a screwdriver, remove the piston seal from the cylinder.

BR0RS-05

INSPECTION

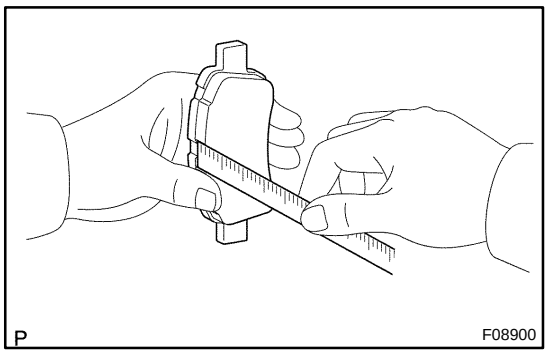

1. MEASURE PAD LINING THICKNESS

Using a ruler, measure the pad lining thickness.

Standard thickness: 11.0 mm (0.433 in.)

Minimum thickness: 1.0 mm (0.039 in.)

Replace the pad if the pad's thickness is at the minimum thickness or less, or if the pad has severe and uneven wear.

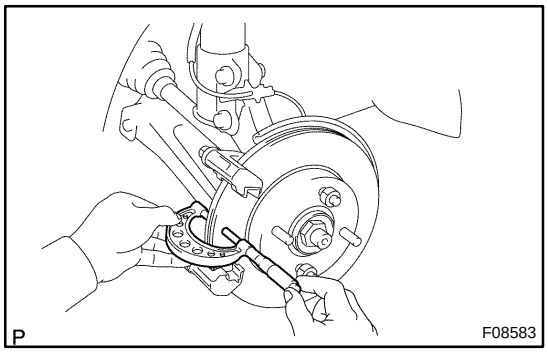

2. MEASURE DISC THICKNESS

Using a micrometer, measure the disc thickness.

Standard thickness: 18.0 mm (0.709 in.)

Minimum thickness: 16.0 mm (0.630 in.)

Replace the disc if the disc's thickness is at the minimum thickness or less. Replace the disc or grind it on a lathe if it is badly scored or worn unevenly.

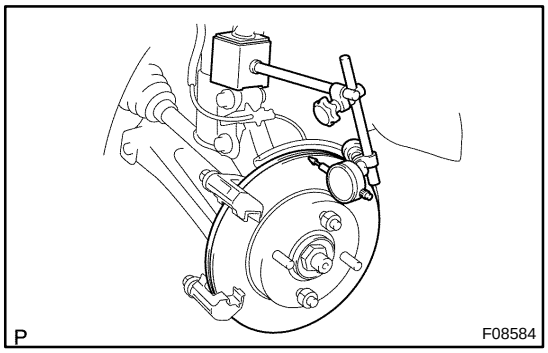

3. MEASURE DISC RUNOUT

Using a dial indicator, measure disc runout 10 mm (0.39 in.) away from the outer edge of the disc.

Maximum disc runout: 0.05 mm (0.0020 in.)

If the disc's runout is the maximum value or greater, check the bearing play is in the axial direction and check the axle hub runout (See page SA-10). If the bearing play and axle hub runout are not abnormal, adjust the disc runout or grind it on a "On-car" brake late.

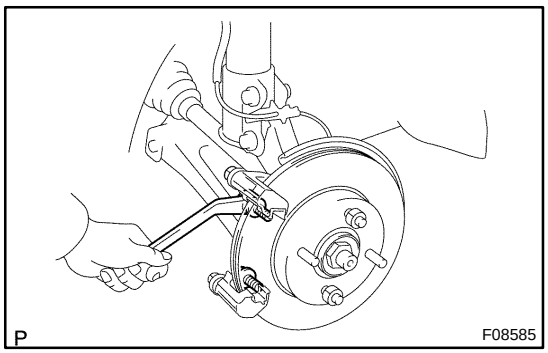

4. IF NECESSARY, ADJUST DISC RUNOUT

(a) Remove the 2 mounting bolts and torque plate from the knuckle.

(b) Remove the hub nuts and the disc. Reinstall the disc in the position turned 1/4 from its original position on the hub. Install and torque the hub nuts.

Torque: 88 N·m (900 kgf·cm, 65 ft·lbf)

(c) Remeasure the disc runout. Make a note of the runout and the disc's position on the hub.

Repeat (b) until the disc has been installed on the 2 remaining hub positions.

If the minimum runout recorded in (b) and (c) is less than 0.05 mm (0.0020 in.), install the disc in that position.

If the minimum runout recorded in (b) and (c) is greater than 0.05 mm (0.0020 in.), replace the disc and repeat step 3.

(d) Install the torque plate and 2 mounting bolts.

Torque: 88 N·m (900 kgf·cm, 65 ft·lbf)

BR0RU-02

INSTALLATION

Installation is in the reverse order of removal (See page BR-22).

HINT:

- After installation, fill the brake reservoir with brake fluid and bleed the brake system (See page BR-4).
- Check for leaks.

BR0RT-03

REASSEMBLY

Reassembly is in the reverse order of disassembly (See page BR-23).

NOTICE:

Apply lithium soap base glycol grease and disc brake grease to the parts indicated by arrows (See page BR-21).

BR0RQ-04

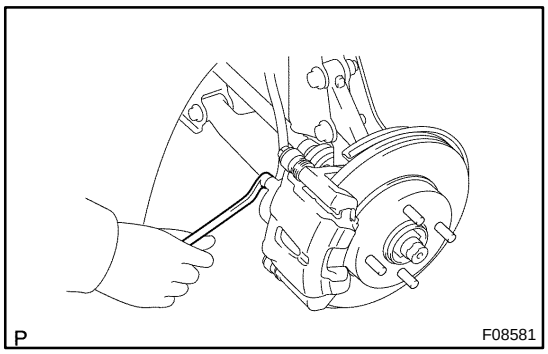

REMOVAL

1. REMOVE FRONT WHEEL

Remove the wheel and temporarily fasten the disc with hub nuts.

Torque: 103 N·m (1,050 kgf·cm, 76 ft·lbf)

2. DISCONNECT FLEXIBLE HOSE

(a) Remove the union bolt and gasket from the caliper, then disconnect the flexible hose from the caliper.

Torque: 30 N·m (310 kgf·cm, 22 ft·lbf)

HINT:

At the time of installation, install the flexible hose lock securely in the lock hole in the caliper.

(b) Use a container to catch the brake fluid as it drains out.

3. REMOVE BRAKE CALIPER

(a) Hold the sliding pin and loosen the 2 installation bolts, and remove the 2 installation bolts.

Torque: 34 N·m (350 kgf·cm, 25 ft·lbf)

(b) Remove the caliper from the torque plate.

(c) Remove the 2 dust boots from the torque plate.

4. REMOVE BRAKE PADS WITH ANTI-SQUEAL SHIMS

5. REMOVE 2 PAD SUPPORT PLATES

FRONT BRAKE PAD

BR0RN-04

COMPONENTS

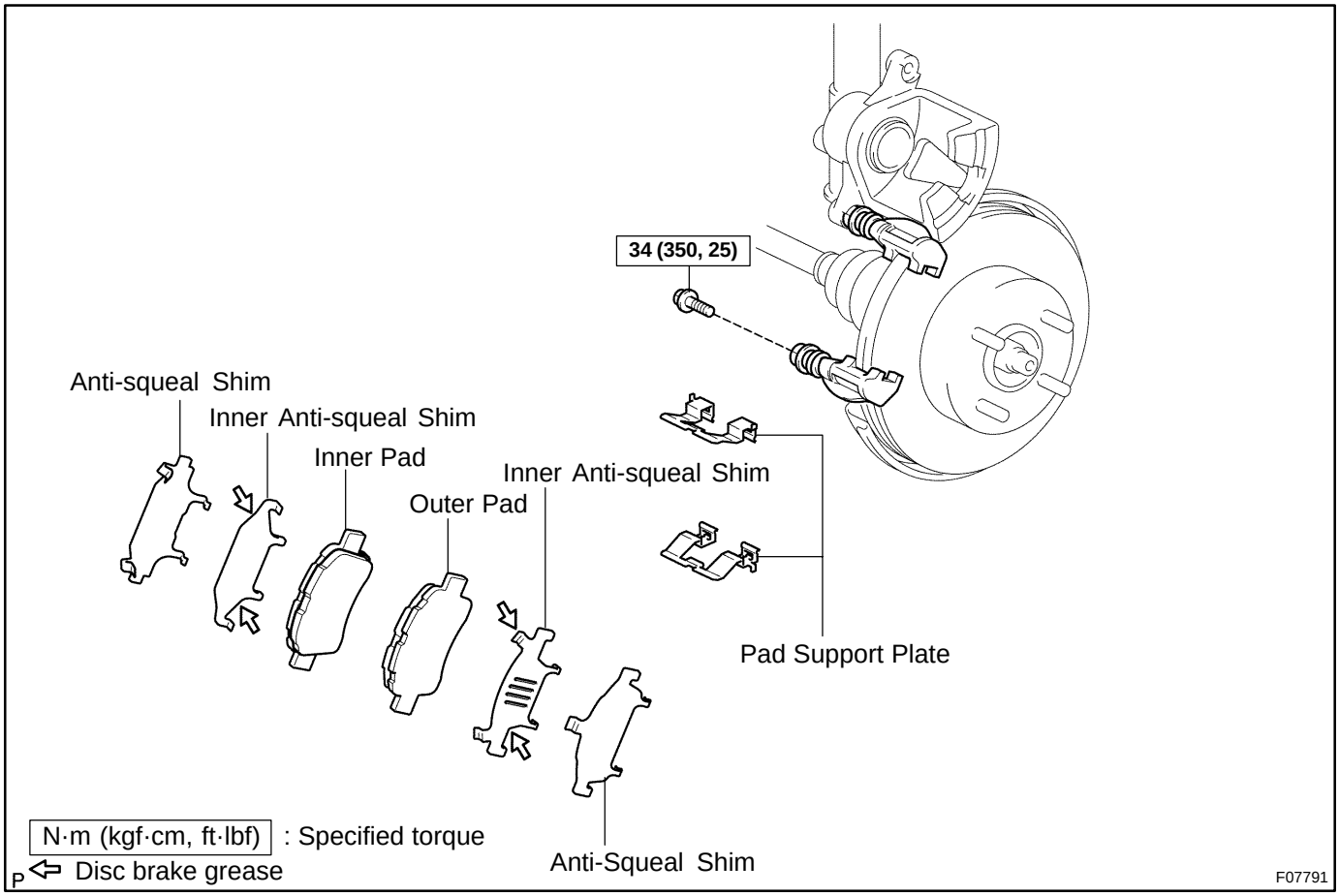

BR11D-02

REPLACEMENT

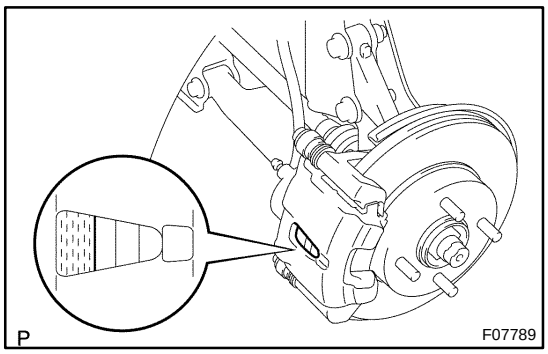

1. REMOVE FRONT WHEEL

2. INSPECT PAD LINING THICKNESS

Check the pad thickness through the caliper inspection hole and replace the pads if they are not within the specification.

Minimum thickness: 1.0 mm (0.039 in.)

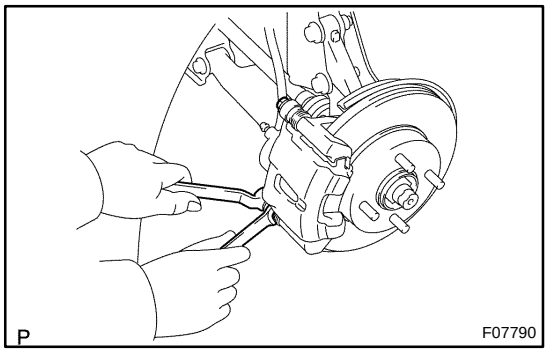

3. LIFT UP CALIPER

(a) Hold the sliding pin on the bottom and loosen the installation bolt, and remove the installation bolt.

(b) Lift up the caliper and suspend it securely.

HINT:

Do not disconnect the flexible hose from the caliper.

4. REMOVE BRAKE PADS WITH ANTI-SQUEAL SHIMS

5. REMOVE 2 PAD SUPPORT PLATES

NOTICE:

The support plates can be used again provided that they have sufficient rebound, no deformation, cracks or wear, and have had all rust, dirt and foreign particles cleaned off.

6. CHECK DISC THICKNESS AND RUNOUT

(See page BR-24)

7. INSTALL 2 PAD SUPPORT PLATES

8. INSTALL NEW PADS

NOTICE:

When replacing worn pads, the anti-squeal shims and pad wear indicator plates must be replaced together with the pads.

(a) Apply disc brake grease to the anti-squeal shims (See page BR-21).

(b) Install the 2 anti-squeal shims on the outer pad.

(c) Install the 2 anti-squeal shims on the inner pad.

(d) Install the inner pad with the pad wear indicator plate facing upward.

(e) Install the outer pad.

NOTICE:

There should be no oil or grease adhering to the friction surfaces of the pads or the disc.

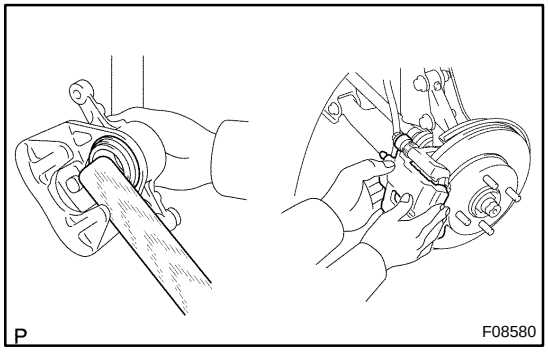

9. INSTALL CALIPER

(a) Draw out a small amount of brake fluid from the reservoir.

(b) Press in the piston with a hammer handle or similar implement.

HINT:

If the piston is difficult to push in, loosen the bleeder plug and push in the piston while letting some brake fluid escape.

(c) Install the caliper.

(d) Hold the sliding pin and install the installation bolt.

Torque: 34 N·m (350 kgf·cm, 25 ft·lbf)

10. INSTALL FRONT WHEEL

11. CHECK THAT FLUID LEVEL IS AT MAX LINE

FRONT SPEED SENSOR

COMPONENTS

BR0S4-03

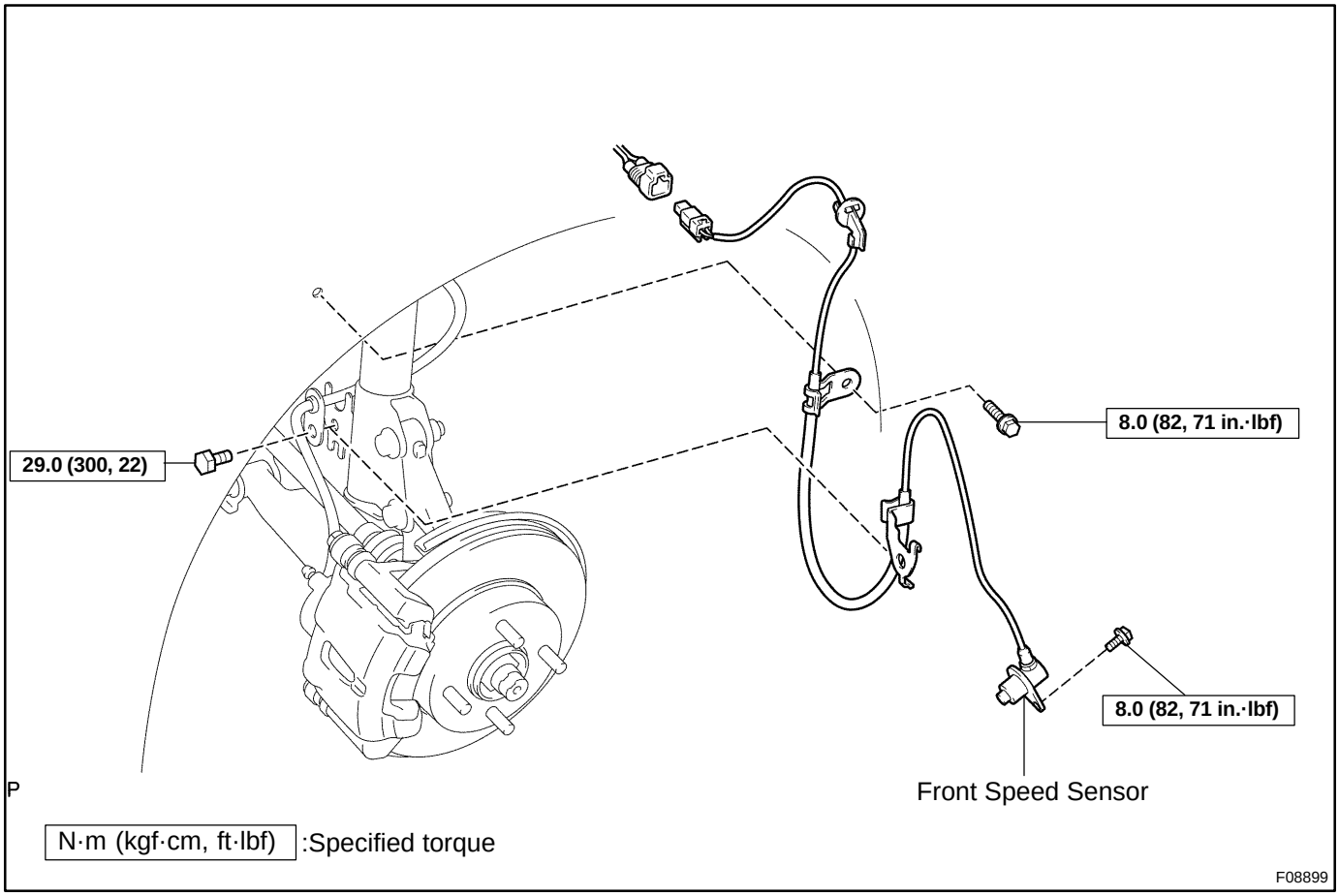

BR0S6-04

INSTALLATION

Installation is in the reverse order of removal (See page BR-39).

HINT:

After installation, check the speed sensor signal (See page DI-201).

BR0S5-03

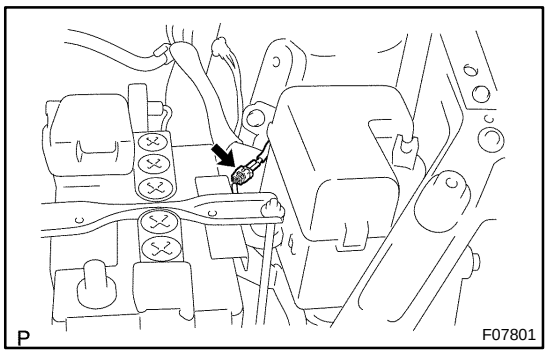

REMOVAL

1. DISCONNECT SPEED SENSOR CONNECTOR

Disconnect the speed sensor connector.

2. REMOVE FRONT WHEEL

Torque: 103 N·m (1,050 kgf·cm, 76 ft·lbf)

3. REMOVE SPEED SENSOR

(a) Remove the 2 clamp bolts and a clip holding the sensor harness to the body and shock absorber.

Torque:
Harness clamp x Body:
8.0 N·m (82 kgf·cm, 71 in.·lbf)
Harness clamp x Shock absorber:
29.0 N·m (300 kgf·cm, 22 ft·lbf)

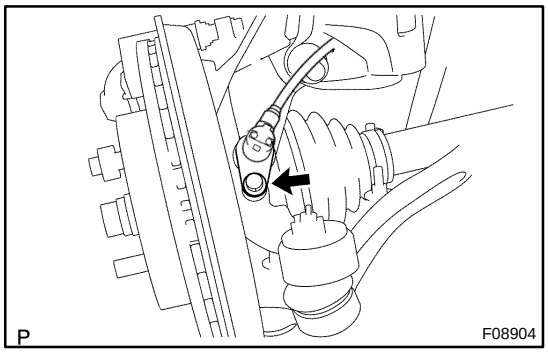

(b) Remove the bolt and speed sensor from the steering knuckle.

Torque: 8.0 N·m (82 kgf·cm, 71 in.·lbf)

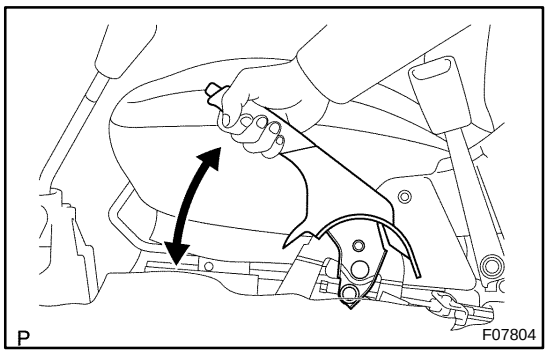

PARKING BRAKE LEVER

BR0RC-05

ON-VEHICLE INSPECTION

1. CHECK PARKING BRAKE LEVER TRAVEL

Pull the parking brake lever all the way up, and count the number of clicks.

Parking brake lever travel at 196 N (20 kgf, 44.1 lbf): 6 - 9 clicks

If incorrect, adjust the parking brake.

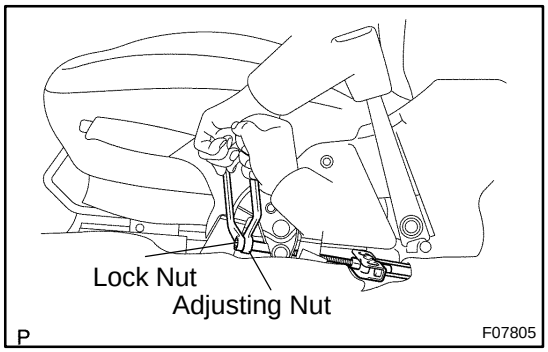

2. IF NECESSARY, ADJUST PARKING BRAKE

HINT:

Before adjusting the parking brake, make sure that the rear brake shoe clearance has been adjusted.

For shoe clearance adjustment, see page BR-31 .

(a) Remove the console box.

(b) Loosen the lock nut and turn the adjusting nut until the lever travel is correct.

(c) Tighten the lock nut.

Torque: 5.4 N·m (55 kgf·cm, 48 in.·lbf)

(d) Install the console box.

PROPORTIONING VALVE (P VALVE)

BR0RZ-05

ON-VEHICLE INSPECTION

1. INSTALL LSPV GAUGE (SST)

SST 09709-29018

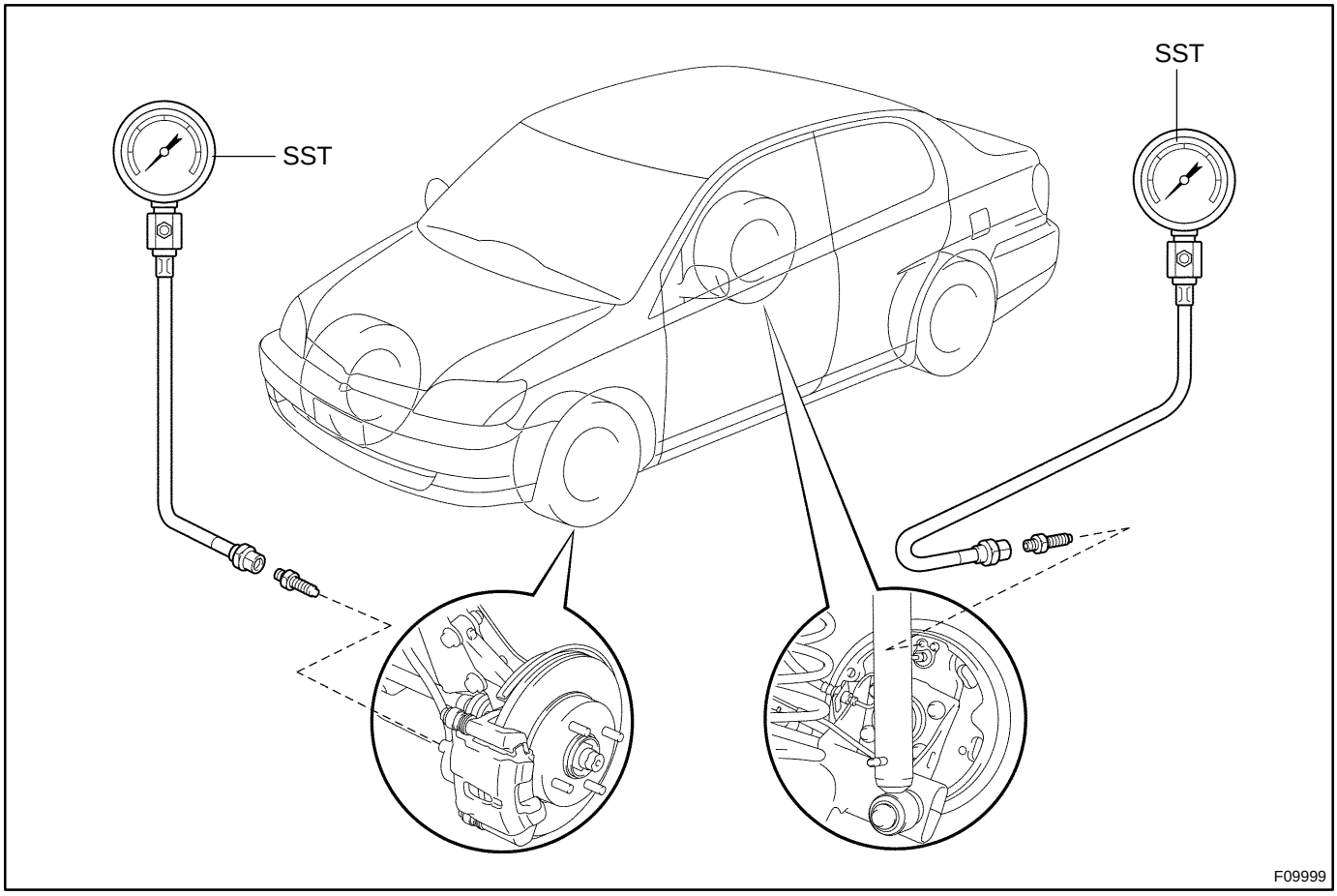

2. BLEED AIR FROM FLUID PRESSURE GAUGE

3. RAISE FRONT BRAKE CALIPER PRESSURE AND CHECK REAR WHEEL CYLINDER PRESSURE

w/o ABS:

Front brake caliper pressure	Rear wheel cylinder pressure
2,942 kPa (30 kgf/cm^2, 427 psi)	2,942 kPa (30 kgf/cm^2, 427 psi)
7,845 kPa (80 kgf/cm^2, 1,138 psi)	4,168 kPa (42.5 kgf/cm^2, 604 psi)

When inspecting the fluid pressure, inspect the left front and right rear together, and the right front and left rear together.

If the rear wheel cylinder pressure is incorrect, replace the ABS actuator.

4. REMOVE LSPV GAUGE (SST) AND BLEED BRAKE SYSTEM (See page BR-4)

SST 09709-29018

5. CHECK FOR LEAKS

REAR DRUM BRAKE

BR18N-02

COMPONENTS

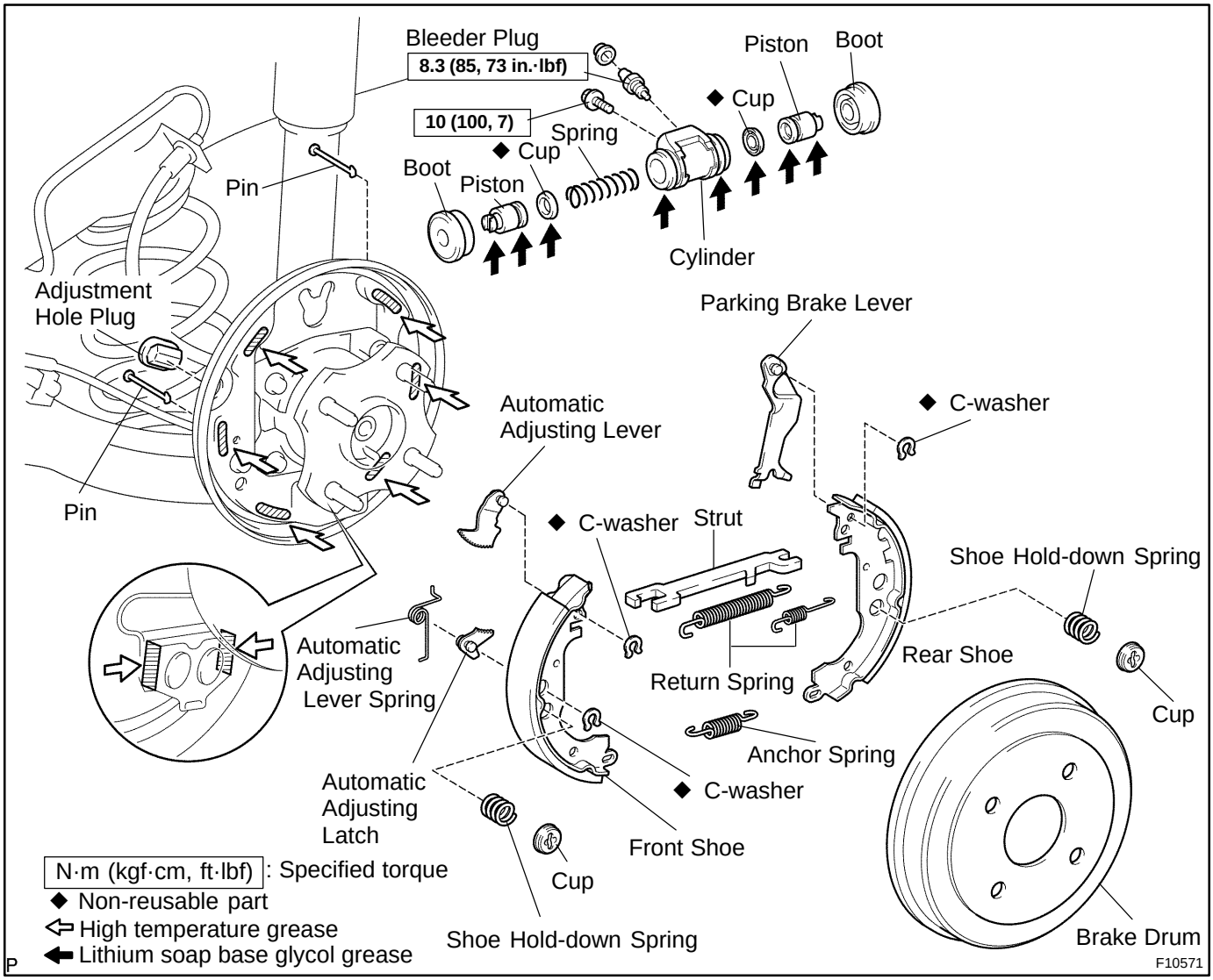

BR0RX-08

INSPECTION

1. INSPECT DISASSEMBLED PARTS

Inspect the disassembled parts for wear, rust or damage.

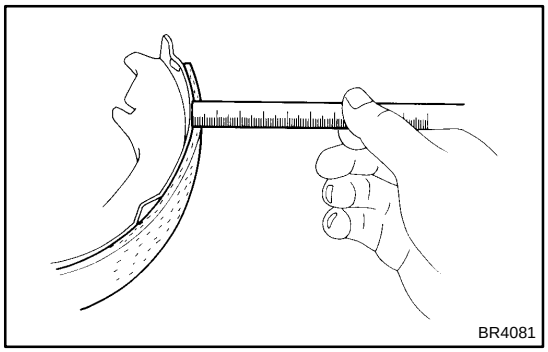

2. MEASURE BRAKE SHOE LINING THICKNESS

Using a ruler, measure the shoe lining thickness.

Standard thickness: 4.0 mm (0.157 in.)

Minimum thickness: 1.0 mm (0.039 in.)

If the thickness is less than the minimum or shoe lining shows signs of uneven wear, replace the brake shoes.

HINT:

If a brake shoes needs replacing, the brake shoes must be replaced as a set

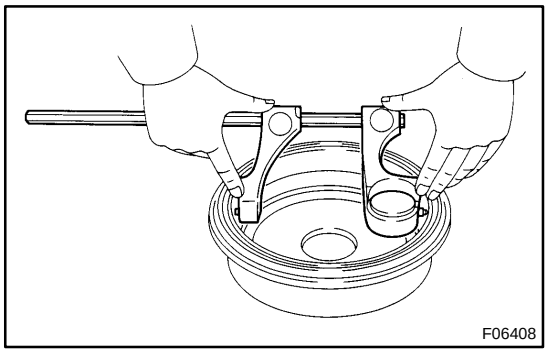

3. MEASURE BRAKE DRUM INSIDE DIAMETER

Using a brake drum gauge or equivalent, measure the inside diameter of the drum.

Standard inside diameter: 180.0 mm (7.087 in.)

Maximum inside diameter: 181.0 mm (7.126 in.)

If the drum is scored or worn, the brake drum may be lathed to the maximum inside diameter.

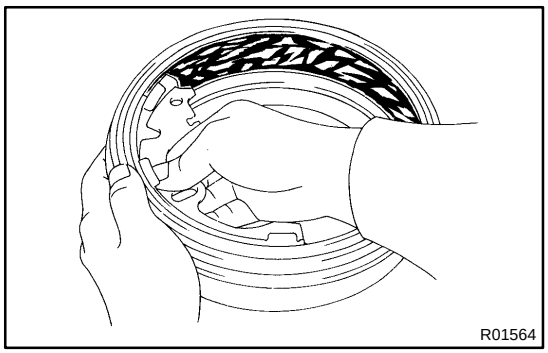

4. INSPECT REAR BRAKE LINING AND DRUM FOR PROPER CONTACT

If the contact between the brake lining and drum is improper, repair the lining with a brake shoe grinder, or replace the brake shoe assembly.

BR11H-04

INSTALLATION

Installation is in the reverse order of removal (See page BR-28).

NOTICE:

Apply lithium soap base glycol grease and high temperature grease to the parts indicated by the arrows (See page BR-27).

1. CHECK OPERATION OF AUTOMATIC ADJUSTING MECHANISM

(a) Narrow the brake shoe width to the most and install the brake drum.

(b) Depress the brake pedal several times.

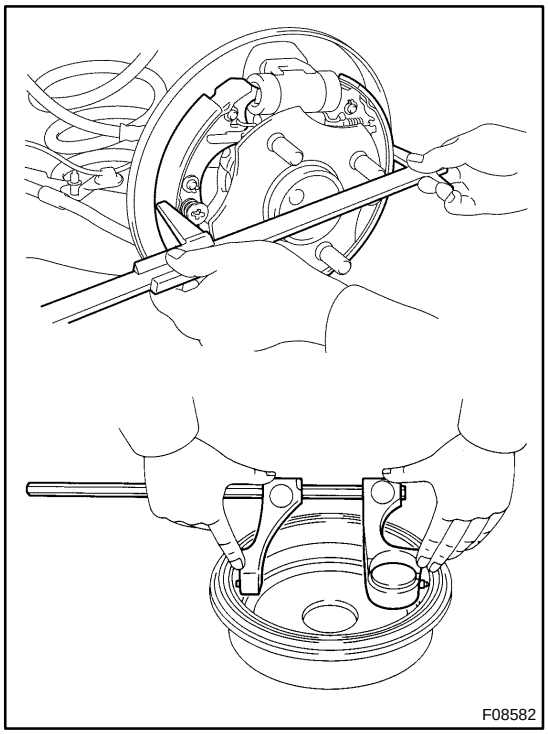

2. CHECK CLEARANCE BETWEEN BRAKE SHOES AND DRUM

(a) Remove the brake drum.

(b) Measure the brake drum inside diameter and diameter of the brake shoes. Check that the difference between the diameters is the correct shoe clearance.

Shoe clearance: 0.6 mm (0.024 in.)

If incorrect, check the adjusting lever and adjusting latch.

(c) Install the brake drum.

3. FILL BRAKE RESERVOIR WITH BRAKE FLUID

4. BLEED BRAKE SYSTEM (See page BR-4)

5. CHECK FOR LEAKS

6. INSTALL REAR WHEEL

Torque: 103 N·m (1,050 kgf·cm, 76 ft·lbf)

BR18O-02

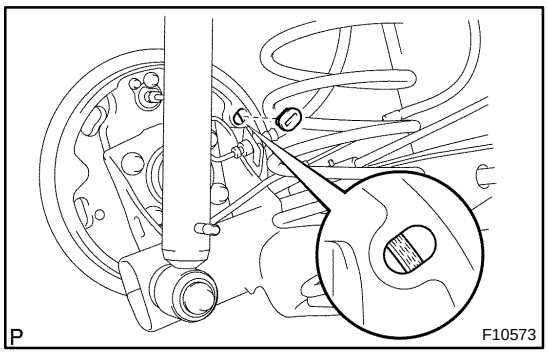

REMOVAL

1. INSPECT SHOE LINING THICKNESS

Remove the adjustment hole plug, and check the shoe lining thickness through the hole.

If less than minimum, replace the shoes.

Minimum thickness: 1.0 mm (0.039 in.)

2. REMOVE REAR WHEEL

3. RELEASE PARKING BRAKE LEVER

4. REMOVE BRAKE DRUM

HINT:

If the brake drum cannot be removed easily, do the following steps.

(a) Remove the adjustment hole plug and insert a screwdriver through the hole in the backing plate.

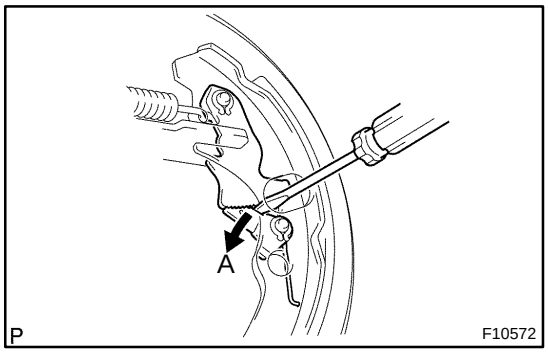

(b) Place the end of a screw driver against the surface of the adjusting latch, and move it in the direction ”A”.

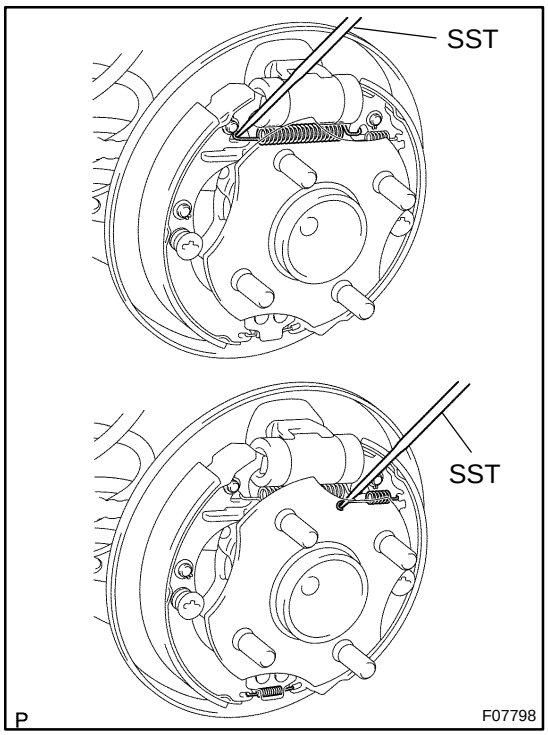

5. REMOVE FRONT SHOE

Remove the front shoe.

(1) Using SST, remove the 2 return springs and anchor spring.

SST 09703-30010

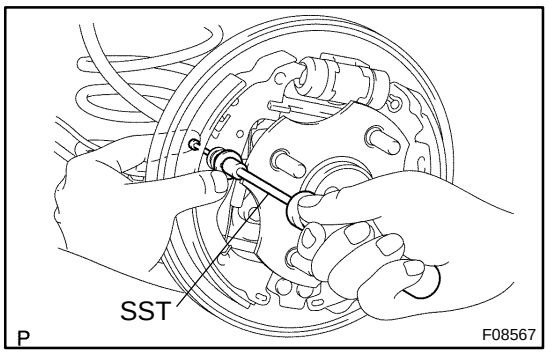

(2) Using SST, remove the cup, shoe hold-down spring and pin.
SST 09718-00010
(3) Remove the front shoe and strut.
(4) Remove the 2 C-washers.
(5) Remove the automatic adjusting lever, automatic adjusting lever spring and automatic adjusting latch.

6. REMOVE REAR SHOE

(a) Using SST, remove the cup, shoe hold-down spring and pin.
SST 09718-00010

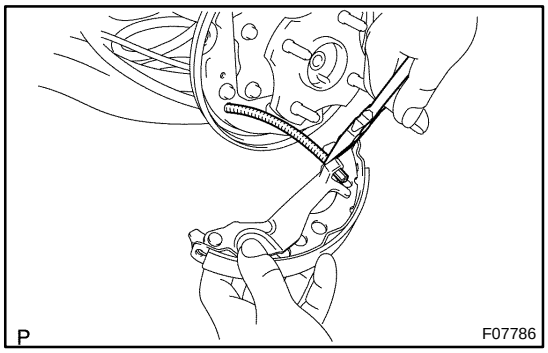

(b) Using needle-nose pliers, disconnect the parking brake cable from the parking brake lever, and remove the rear shoe.

7. REMOVE PARKING BRAKE LEVER

(a) Remove the C-washer.
(b) Remove the parking lever from rear shoe.

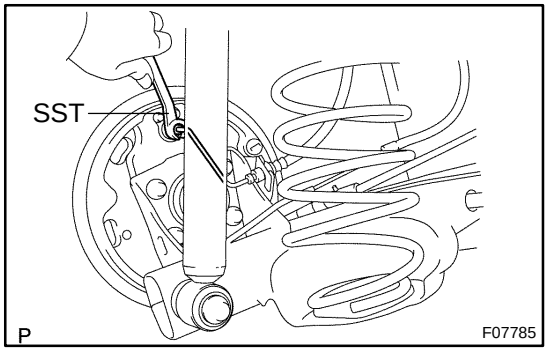

8. REMOVE WHEEL CYLINDER

(a) Using SST, disconnect the brake line. Use a container to catch the brake fluid.
SST 09751-3601 1
Torque: 15 N·m (155 kgf·cm, 11 ft·lbf)
(b) Remove the bolt and the wheel cylinder.
Torque: 10 N·m (100 kgf·cm, 7 ft·lbf)

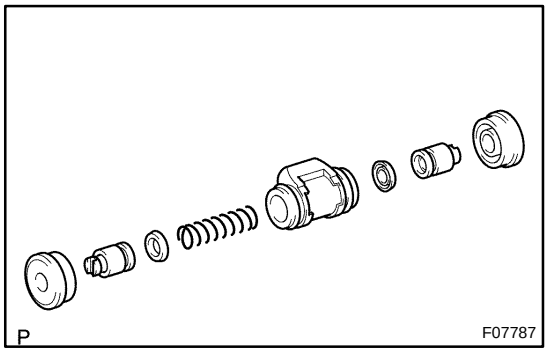

9. DISASSEMBLE WHEEL CYLINDER

(a) Remove the 2 boots from the wheel cylinder.
(b) Remove the 2 pistons from the wheel cylinder.
(c) Remove the spring from the wheel cylinder.
(d) Remove the 2 piston cups from each piston.

REAR SPEED SENSOR

COMPONENTS

BR0S7-04

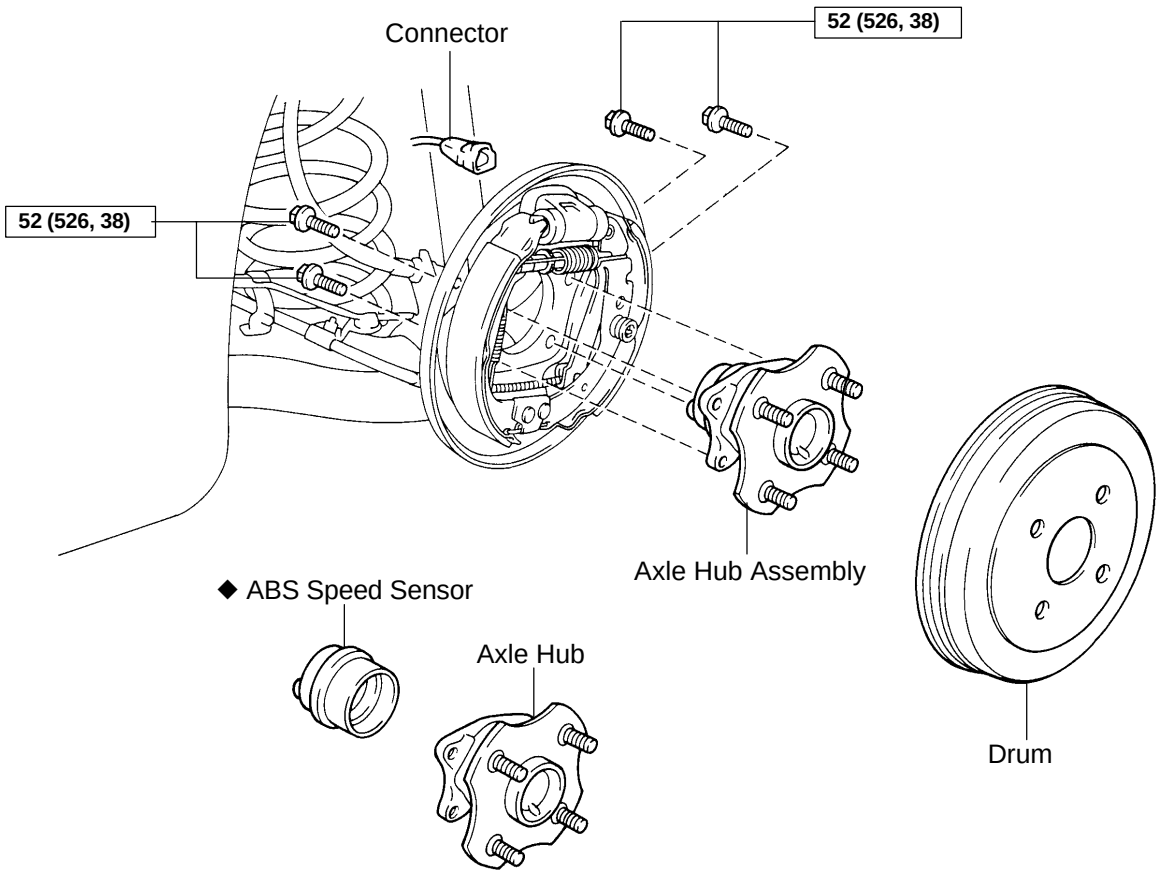

N

N·m (kgf·cm, ft·lbf) : Specified torque

◆ Non-reusable part

F08893

BR11I-04

INSTALLATION

1. INSTALL NEW ABS SPEED SENSOR

(a) Clean the contacting surface of the axle hub and a new ABS speed sensor.

NOTICE:

Do not stick any foreign objects to the sensor rotor.

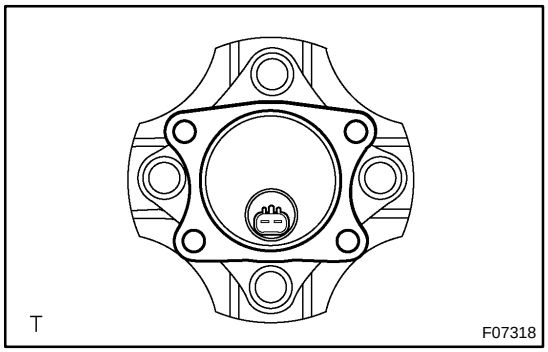

(b) Place the ABS speed sensor on the axle hub so that the connector is set at the bottom under the on-vehicle condition.

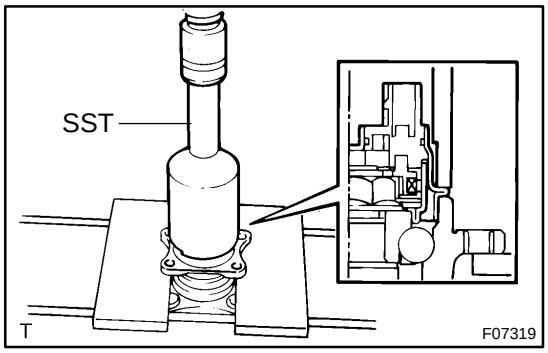

(c) Using SST and a press, install a new ABS speed sensor to the axle hub.

SST 09214-7601 1

NOTICE:

- **Do not tap the speed sensor with a hammer directly.**
- **Check that there should be no foreign objects on the speed sensor detection portion.**
- **Press in the ABS speed sensor straight and slowly.**

2. INSTALL SPEED SENSOR WITH REAR AXLE HUB (See page SA-45)

3. CONNECT SPEED SENSOR CONNECTOR

4. INSTALL REAR WHEEL

Torque: 103 N·m (1,050 kgf·cm, 76 ft·lbf)

5. CHECK SPEED SENSOR SIGNAL (See page DI-201)

BR0S8-04

REMOVAL

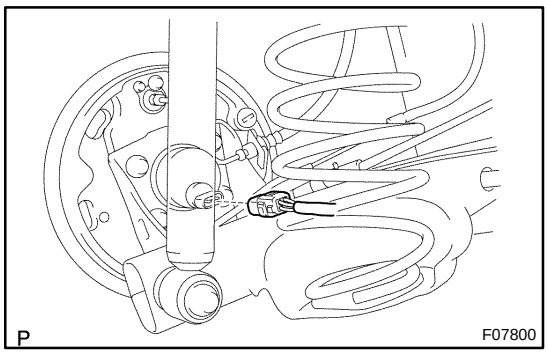

1. REMOVE REAR WHEEL

2. DISCONNECT SPEED SENSOR CONNECTOR

3. REMOVE SPEED SENSOR WITH REAR AXLE HUB (See page SA-42)

4. REMOVE ABS SPEED SENSOR

(a) Using a pin punch and hammer, drive out the 2 pins and remove the 2 attachments from SST.

SST 09520-00031 (09520-00040, 09521-00020)

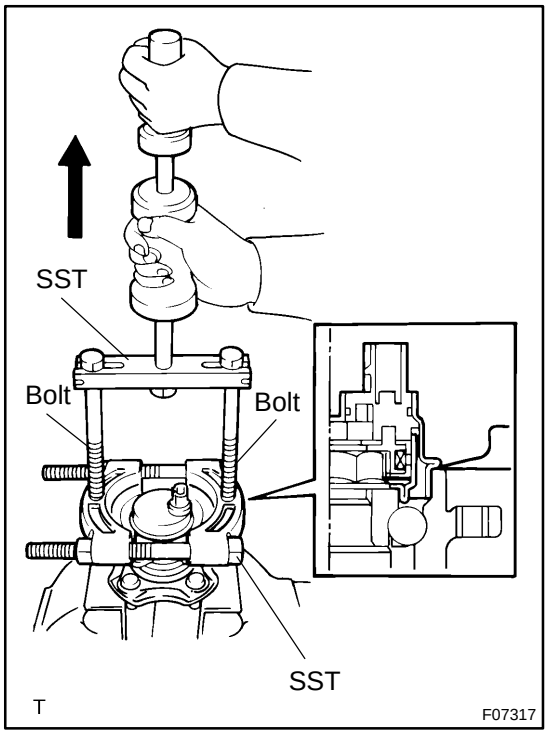

(b) Mount the axle hub assembly in a soft jaw vise.

NOTICE:

Replace the axle hub assembly if it is dropped or a strong shock is given to it.

(c) Using SST and 2 bolts (Diameter: 12 mm, Pitch: 1.5 mm), remove the ABS speed sensor.

SST 09520-00031 (09520-00040, 09521-00020), 09950-00020

NOTICE:

- **Do not allow any foreign matter sticking to the sensor rotor.**
- **Pull out the ABS speed sensor straightly not to damage the sensor rotor.**
- **If damage has occurred to the sensor rotor, replace the axle hub assembly.**
- **Do not scratch the contacting surface of the axle hub and speed sensor.**

TROUBLESHOOTING

PROBLEM SYMPTOMS TABLE

BR0R9-05

Use the table below to help you find the cause of the problem. The numbers indicate the priority of the likely cause of the problem. Check each part in order. If necessary, replace these parts.

Symptom	Suspect Area	See page
Lower pedal or spongy pedal	5. Brake system (Fluid leaks)	DI-236
	6. Brake system (Air in)	BR-4
	7. Piston seals (Worn or damaged)	BR-21
	8. Rear brake shoe clearance (Out of adjustment)	BR-31
	9. Master cylinder (Faulty)	BR-10
	10. Booster push rod (Out of adjustment)	BR-16
Brake drag	1. Brake pedal freeplay (Minimal)	BR-6
	2. Parking brake lever travel (Out of adjustment)	BR-9
	3. Parking brake wire (Sticking)	-
	4. Rear brake shoe clearance (Out of adjustment)	BR-31
	5. Pad or lining (Cracked or distorted)	BR-18 BR-27
	6. Piston (Stuck)	BR-21 BR-27
	7. Piston (Frozen)	BR-21 BR-27
	8. Anchor or return spring (Faulty)	BR-27
	9. Booster push rod (Out of adjustment)	BR-14
	10. Booster system (Vacuum leaks)	BR-14
	11. Master cylinder (Faulty)	BR-10
Brake pull	1. Piston (Stuck)	BR-21 BR-27
	2. Pad or lining (Oily)	BR-18 BR-27
	3. Piston (Frozen)	BR-21 BR-27
	4. Disc (Scored)	BR-21
	5. Pad or lining (Cracked or distorted)	BR-18 BR-27
Hard pedal but brake inefficient	1. Brake system (Fluid leaks)	DI-236
	2. Brake system (Air in)	BR-4
	3. Pad or lining (Worn)	BR-18 BR-27
	4. Pad or lining (Cracked or distorted)	BR-18 BR-27
	5. Rear brake shoe clearance (Out of adjustment)	BR-31
	6. Pad or lining (Oily)	BR-18 BR-27
	7. Pad or lining (Glazed)	BR-18 BR-27
	8. Disc (Scored)	BR-21
	9. Booster push rod (Out of adjustment)	BR-14
	10. Booster system (Vacuum leaks)	BR-13

Symptom	Suspect Area	See page
Noise from brake	1. Pad or lining (Cracked or distorted)	BR-18 BR-27
	2. Installation bolt (Loosen)	BR-21
	3. Disc (Scored)	BR-21
	4. Pad support plate (Loosen)	BR-21
	5. Sliding pin (Worn)	BR-21
	6. Pad or lining (Dirty)	BR-18 BR-27
	7. Pad or lining (Glazed)	BR-21 BR-27
	8. Anchor or return spring (Faulty)	BR-27
	9. Anti-squeal shim (Damage)	BR-18
	10.Hold-down spring (Damage)	BR-27

CH0KM-01

ON-VEHICLE INSPECTION

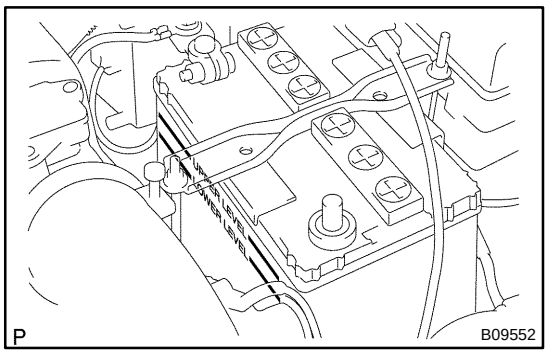

1. CHECK BATTERY ELECTROLYTE LEVEL

Check the electrolyte quantity of each cell.

Maintenance-Free Battery:

If under the lower level, replace the battery (or add distilled water if possible) and check the charging system.

Except Maintenance-Free Battery:

If under the lower level, add distilled water.

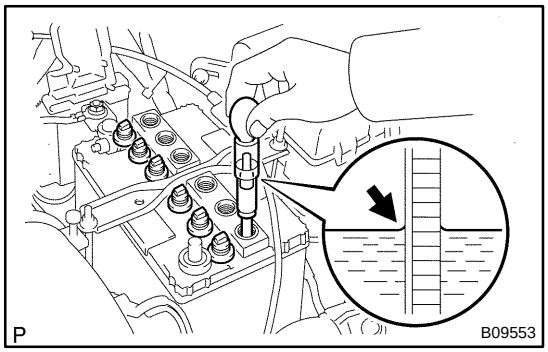

2. Except Maintenance-Free Battery:
CHECK BATTERY SPECIFIC GRAVITY

Check the specific gravity of each cell.

Standard specific gravity:
1.25 - 1.29 at 20˚C (68 ˚F)

If the specific gravity is less than specification, charge the battery.

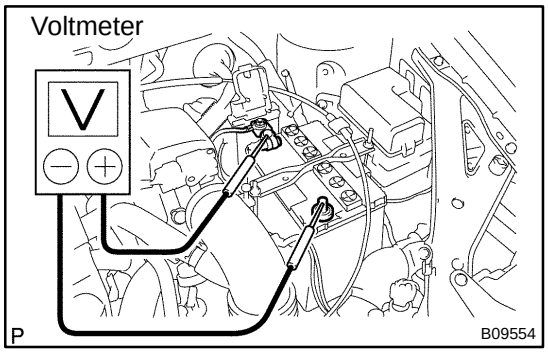

3. CHECK BATTERY VOLTAGE

(a) After having driven the vehicle and in the case that 20 minutes have not passed after having stopped the engine, turn the ignition switch ON and turn on the electrical system (headlight, blower motor, rear defogger etc.) for 60 seconds to remove the surface charge.

(b) Turn the ignition switch OFF and turn off the electrical systems.

(c) Measure the battery voltage between the negative (-) and positive (+) terminals of the battery.

Standard voltage: 12.5 - 12.9 V at 20˚C (68˚F)

If the voltage is less than specification, charge the battery.

HINT:

Check the indicator as shown in illustration.

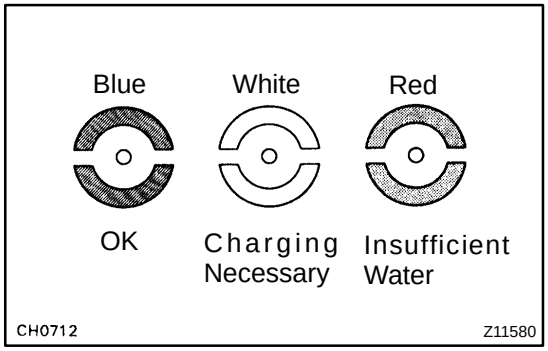

4. CHECK BATTERY TERMINALS, FUSIBLE LINK AND FUSES

(a) Check that the battery terminals are not loose or corroded.

(b) Check the fusible link, H-fuses and fuses for continuity.

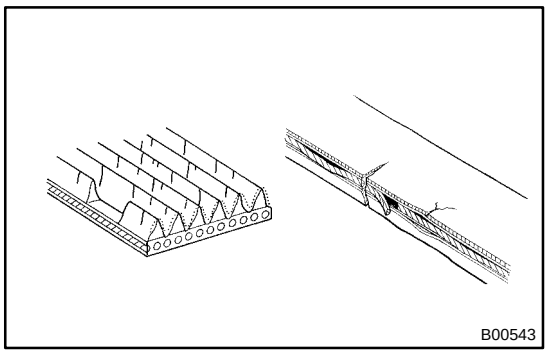

5. INSPECT DRIVE BELT

(a) Visually check the belt for excessive wear, frayed cords etc.

If any defect has been found, replace the drive belt.

HINT:

Cracks on the rib side of a belt are considered acceptable. If the belt has chunks missing from the ribs, it should be replaced.

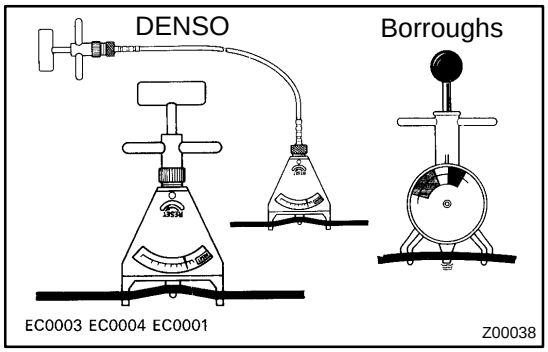

(b) Using a belt tension gauge, measure the belt tension.

Belt tension gauge:

DENSO BTG-20 (95506-00020)

Borroughs No. BT-33-73F

Drive belt tension:

New belt: 540 - 640 N (55 - 65 kgf)

Used belt: 250 - 390 N (25 - 40 kgf)

If the belt tension is not as specified, adjust it.

HINT:

- "New belt" refers to a belt which has been used less than 5 minutes on a running engine.
- "Used belt" refers to a belt which has been used on a running engine for 5 minutes or more.
- After installing a belt, check that it fits properly in the ribbed grooves.
- Check with your hand to confirm that the belt has not slipped out of the groove on the bottom of the pulley.
- After installing a new belt, run the engine for about 5 minutes and recheck the belt tension.

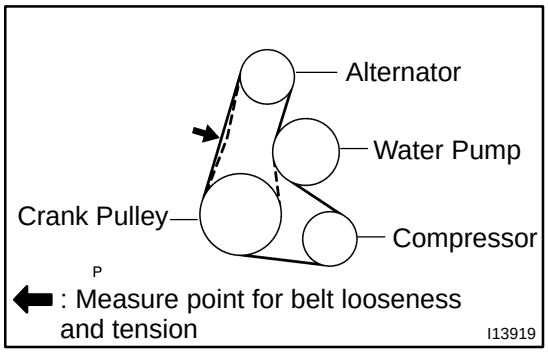

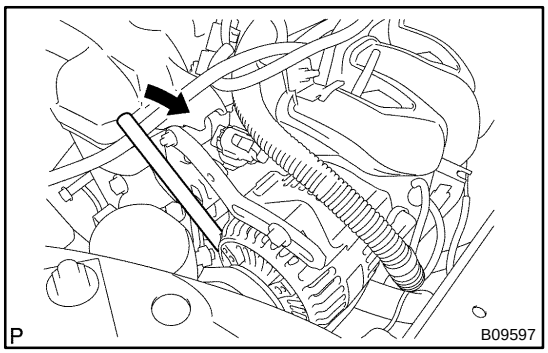

(c) Adjust drive belt tension.

(1) Loosen the 2 mount bolts.

(2) Insert a bar between the entine RH mount bracket and the generator, and pullit forward to make the adjustment.

(3) Torque the 2 bolts.

Torque:

14 mm head 18 N·m (185 kgf·cm, 14 ft·lbf)

17 mm head 54 N·m (550 kgf·cm, 40 ft·lbf)

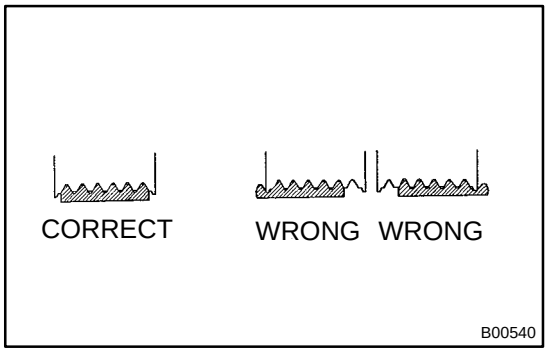

6. VISUALLY CHECK GENERATOR WIRING AND LISTEN FOR ABNORMAL NOISES

(a) Check that the wiring is in good condition.

(b) Check that there is no abnormal noise from the generator while the engine is running.

7. INSPECT DISCHARGE WARNING LIGHT CIRCUIT

(a) Turn the ignition switch "ON". Check that the discharge warning light comes on.

(b) Start the engine. Check that the light goes off.

If the light does not operate as specified, troubleshoot the discharge warning light circuit.

8. INSPECT CHARGING CIRCUIT WITHOUT LOAD

HINT:

If a battery/generator tester is available, connect the tester to the charging circuit as permanufacturer's instructions.

(a) If a tester is not available, connect a voltmeter to the charging circuit as follows:
- Disconnect to the wire from terminal B of the generator and connect it to the negative (-) lead of the ammeter.
- Connect the positive (+) lead of the ammeter to terminal B of the generator.
- Connect the positive (+) lead of the voltmeter to terminal B of the generator.
- Ground the negative (-) lead of the voltmeter.

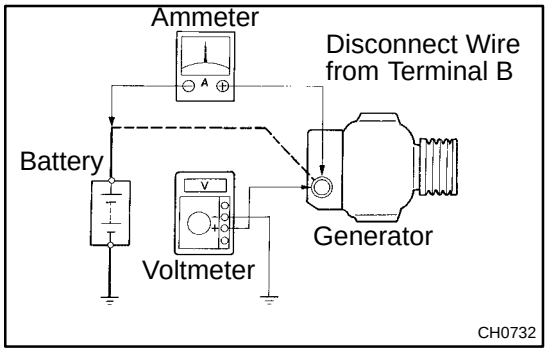

(b) Check the charging circuit as follows:
With the engine running from idle to 2,000 rpm, check the reading on the ammeter and voltmeter.
Standard amperage: 10A or less
Standard voltage: 13.5 - 15.1 V

If the voltmeter reading is more than standard voltage, replace the voltage regulator.

If the voltmeter reading is less than the standard voltage, check the voltage regulator and generator as follows:

9. INSPECT CHARGING CIRCUIT WITH LOAD

(a) With the engine running at 2,000 rpm, turn on the high beam headlights and place the heater blower switch at "H".

(b) Check the reading on the ammeter.
Standard amperage: 30 A or more

If the ammeter reading is less than standard amperage, repair the generator.

HINT:

If the battery is fully charged, the indication will sometimes be less than standard amperage.

CHARGING SYSTEM

CH021-01

PRECAUTION

- **Check that the battery cables are connected to the correct terminals.**
- **Disconnect the battery cables when the battery is given a quick charge.**
- **Do not perform tests with a high voltage insulation resistance tester.**
- **Never disconnect the battery while the engine is running.**

GENERATOR

COMPONENTS

CH023-07

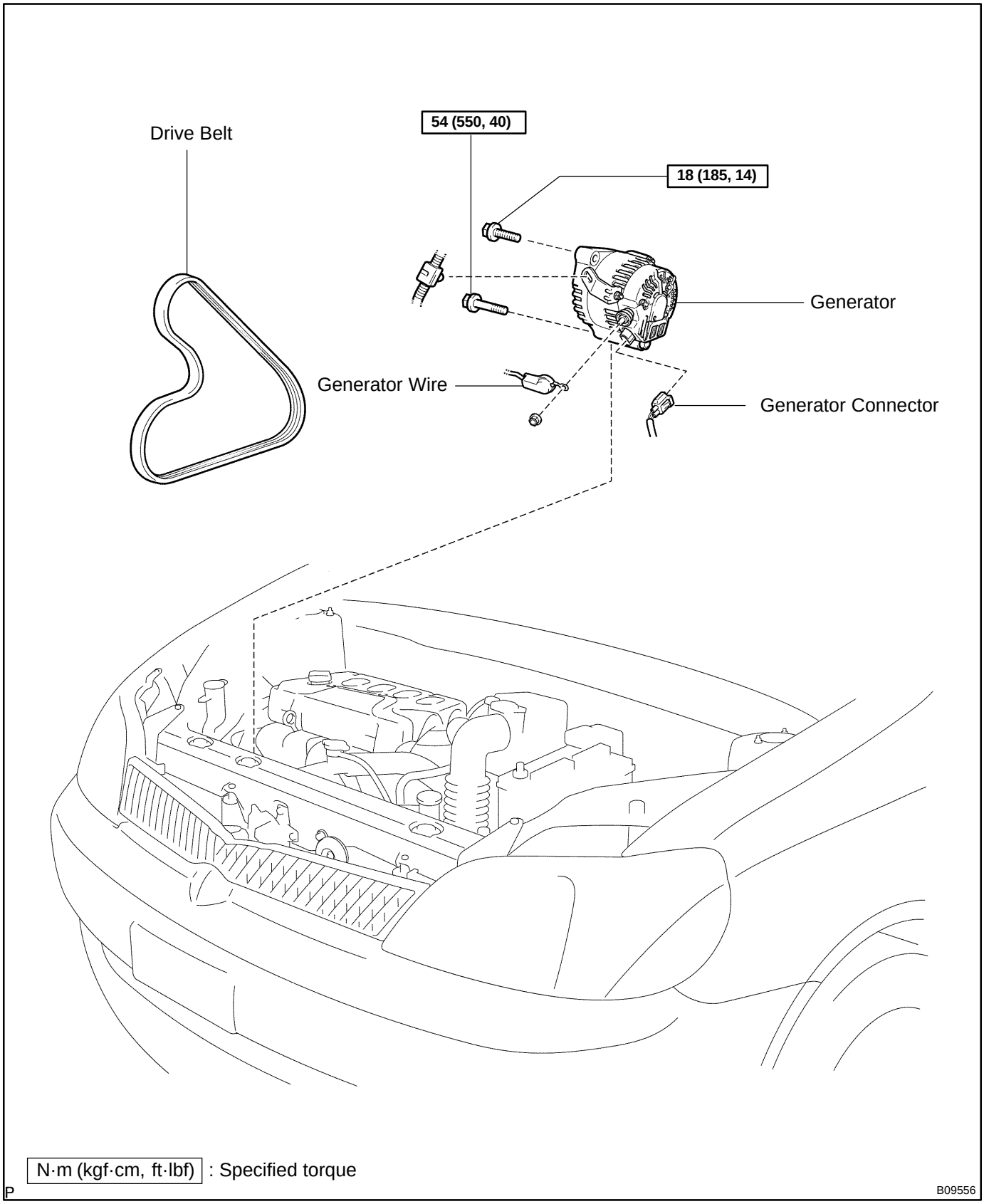

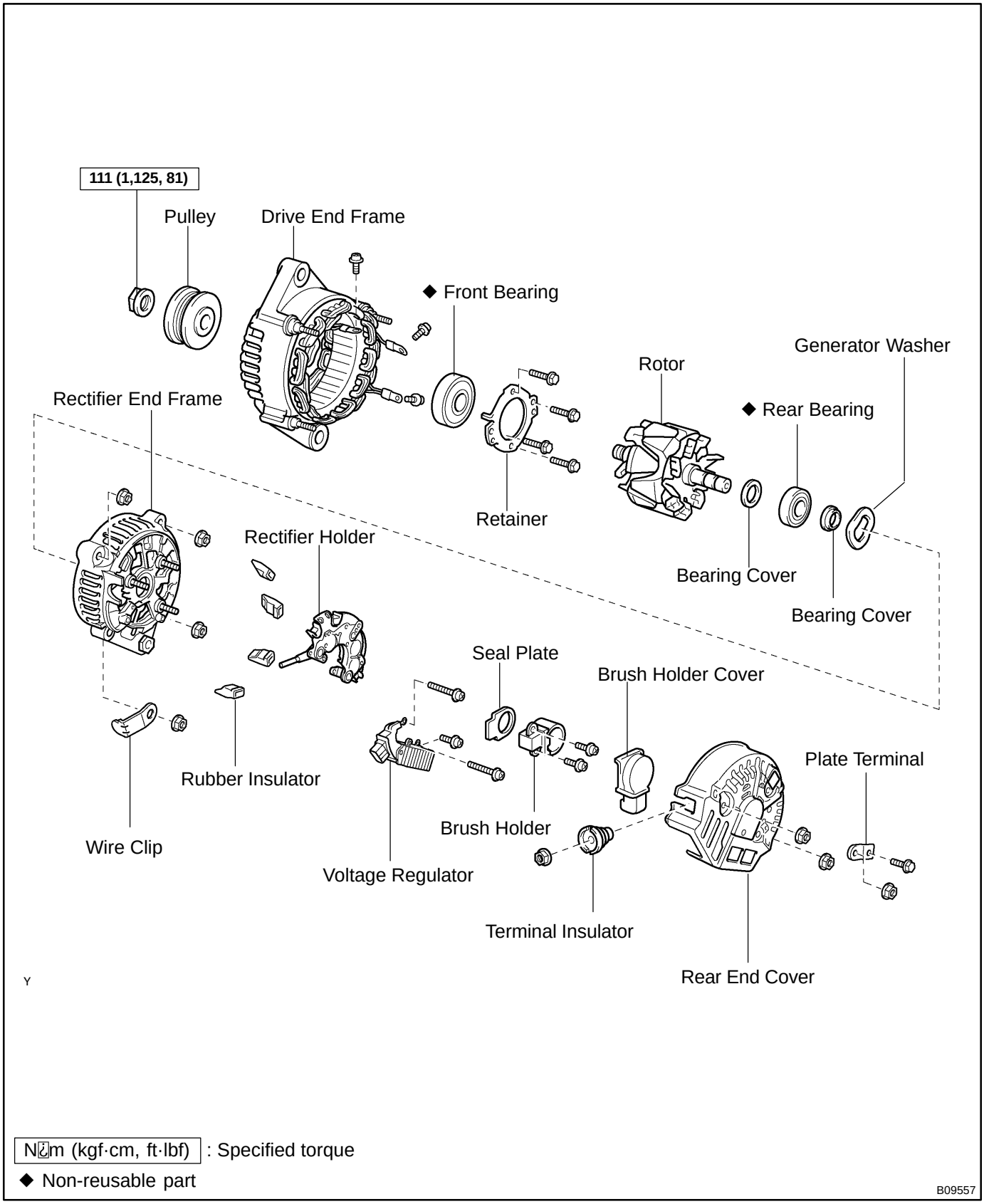
111 (1,125, 81)
Pulley
Drive End Frame
◆ Front Bearing
Generator Washer
Rotor
Rectifier End Frame
◆ Rear Bearing
Retainer
Bearing Cover
Bearing Cover
Rectifier Holder
Seal Plate
Brush Holder Cover
Plate Terminal
Rubber Insulator
Brush Holder
Wire Clip
Voltage Regulator
Terminal Insulator
Rear End Cover
Y
N·m (kgf·cm, ft·lbf) : Specified torque
◆ Non-reusable part
B09557

CH0CD-02

DISASSEMBLY

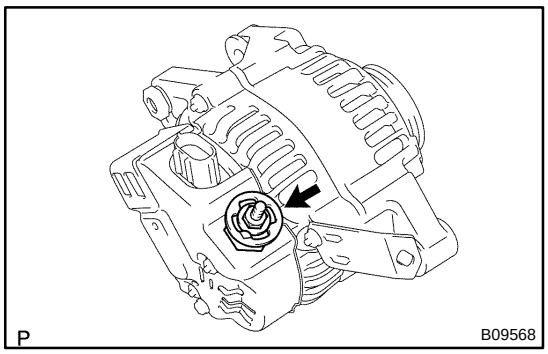

1. REMOVE REAR END COVER

(a) Remove the nut and terminal insulator.

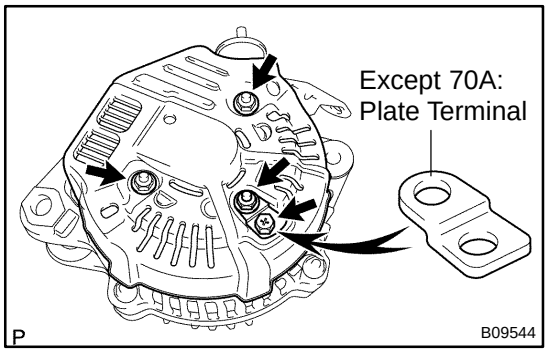

(b) Remove the bolt, 3 nuts, plate terminal and end cover.

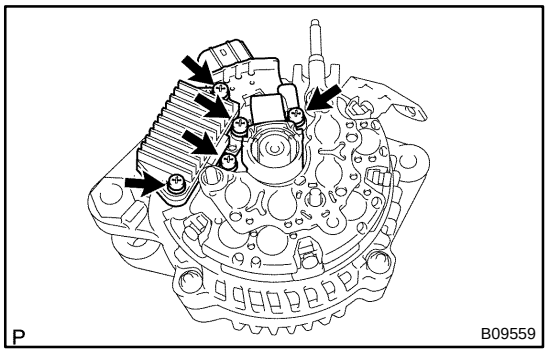

2. REMOVE BRUSH HOLDER AND VOLTAGE REGULATOR

(a) Remove the brush holder cover from the brush holder.
(b) Remove the 5 screws, brush holder and voltage regulator.
(c) Remove the seal plate from the rectifier end frame.

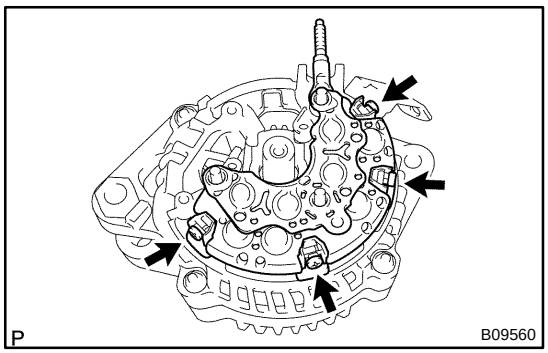

3. REMOVE RECTIFIER HOLDER

(a) Remove the 4 screws and rectifier holder.
(b) Remove the 4 rubber insulators.

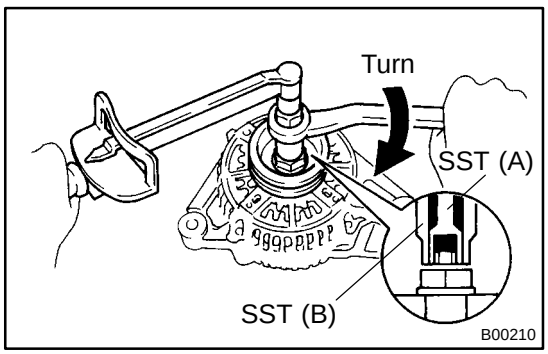

4. REMOVE PULLEY

(a) Hold SST (A) with a torque wrench, and tighten SST (B) clockwise to the specified torque.
SST 09820-6301 1
Torque: 39 N·m (400 kgf·cm, 29 ft·lbf)

(b) Check that SST (A) is secured to the rotor shaft.

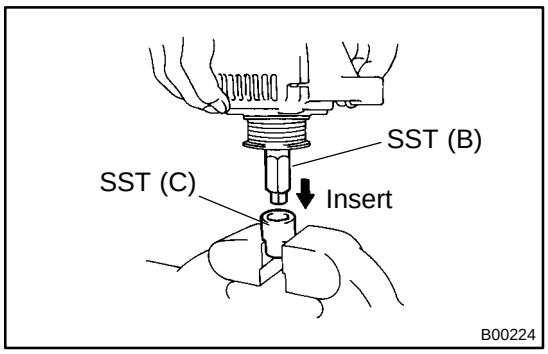

(c) Mount SST (C) in a vise.
(d) Insert SST (B) into SST (C), and attach the pulley nut to SST (C).

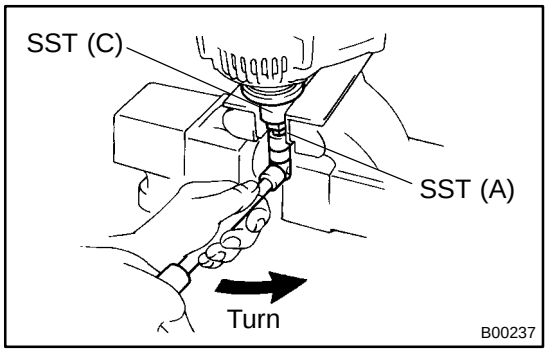

(e) To loosen the pulley nut, turn SST (A) in the direction shown in the illustration.

NOTICE:
To prevent damage to the rotor shaft, do not loosen the pulley nut more than one-half of a turn.

(f) Remove the generator from SST (C).

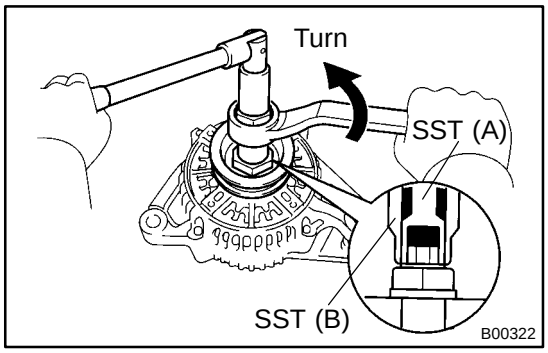

(g) Turn SST (B), and remove SST (A and B).
(h) Remove the pulley nut and pulley.

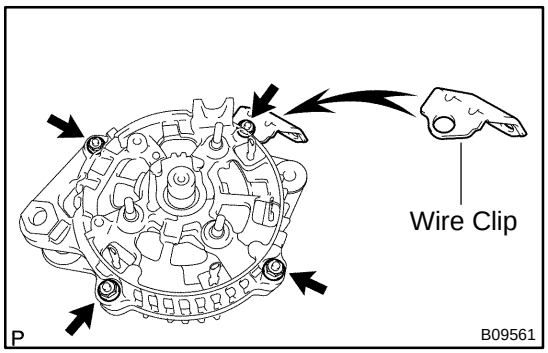

5. REMOVE RECTIFIER END FRAME

(a) Remove the 4 nuts and wire clip.

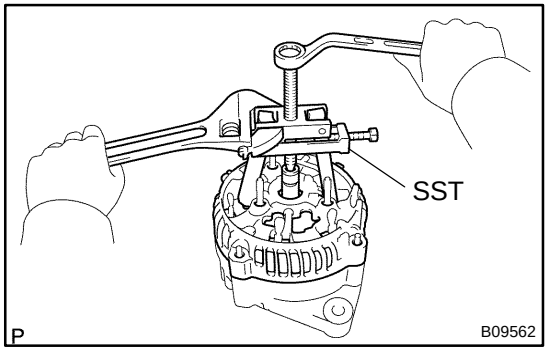

(b) Using SST, remove the rectifier end frame.
SST 09286-4601 1

(c) Remove the generator washer from the rotor

6. REMOVE ROTOR FROM DRIVE END FRAME

CH0KN-01

INSPECTION

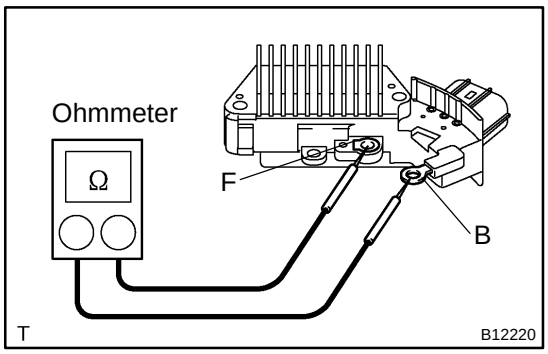

1. INSPECT VOLTAGE REGULATOR

(a) Using an ohmmeter, check the continuity between terminals F and B.

Standard:

When the positive and negative poles between terminals F and B are exchanged, there is continuity in one way but no continuity in another way.

If the continuity is not as specified, replace the voltage regulator.

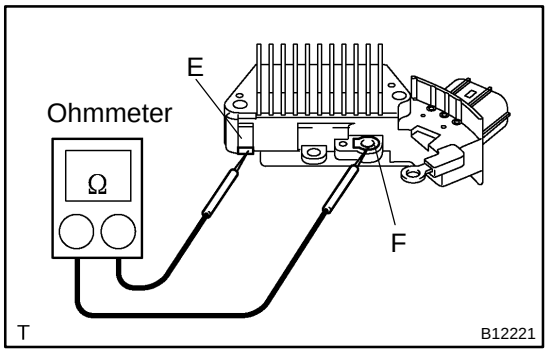

(b) Using an ohmmeter, check the continuity between terminals F and E.

Standard:

When the positive and negative poles between terminals F and E are exchanged, there is continuity in one way but no continuity in another way.

If the continuity is not as specified, replace the voltage regulator.

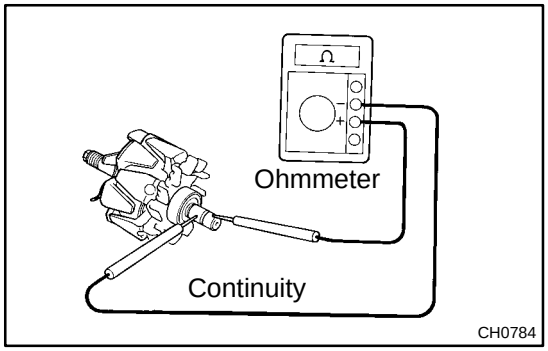

2. INSPECT ROTOR FOR OPEN CIRCUIT

Using an ohmmeter, check that there is continuity between the slip rings.

Standard resistance:

2.7 - 3.1 Ω at 20˚C (68˚F)

If there is no continuity, replace the rotor.

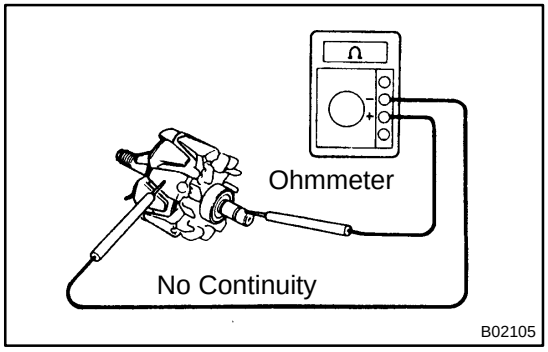

3. INSPECT ROTOR FOR GROUND

Using an ohmmeter, check that there is no continuity between the slip ring and rotor.

If there is continuity, replace the rotor.

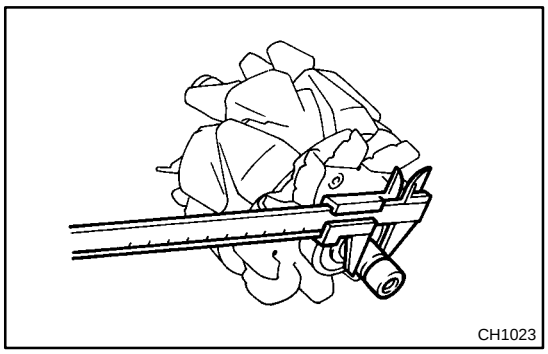

4. INSPECT SLIP RINGS

(a) Check that the slip rings are not rough or scored.

If rough or scored, replace the rotor.

(b) Using a vernier caliper, measure the slip ring diameter.

Standard diameter:
14.2 - 14.4 mm (0.559 - 0.567 in.)
Minimum diameter:
12.8 mm (0.504 in.)

If the diameter is less than minimum, replace the rotor.

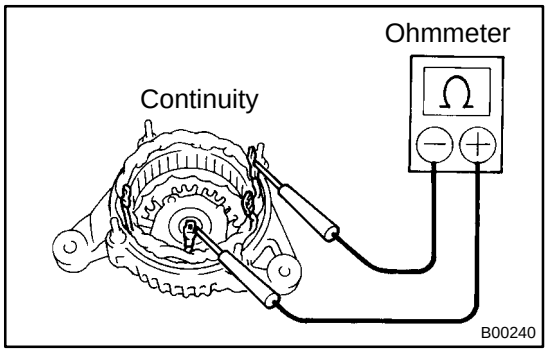

5. INSPECT STATOR (DRIVE END FRAME) FOR OPEN CIRCUIT

Using an ohmmeter, check that there is continuity between the coil leads.

If there is no continuity, replace the drive end frame assembly

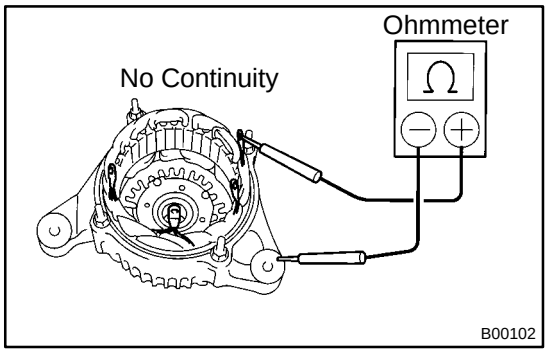

6. INSPECT STATOR (DRIVE END FRAME) FOR GROUND

Using an ohmmeter, check that there is no continuity between the coil lead and drive end frame.

If there is continuity, replace the drive end frame assembly

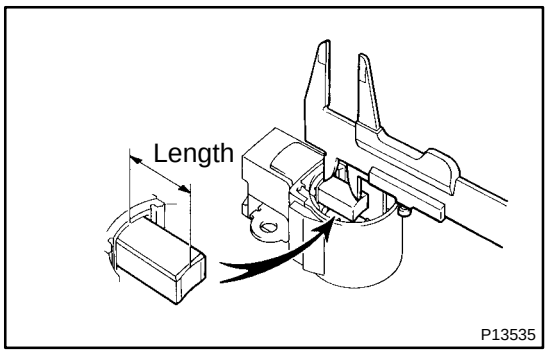

7. INSPECT EXPOSED BRUSH LENGTH

Using vernier calipers, measure the exposed brush length.

Standard exposed length:
9.5 ~ 11.5 mm (0.374 ~ 0.453 in.)
Minimum exposed length:
1.5 mm (0.059 in.)

If the exposed length is less than minimum, replace the brush holder assembly.

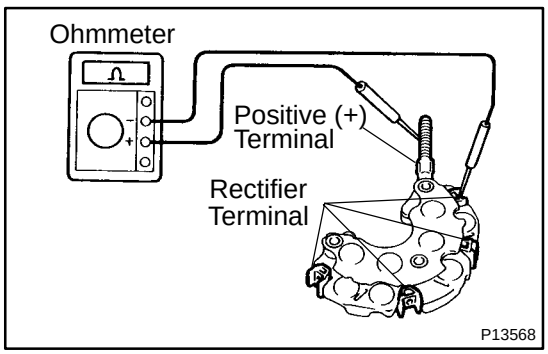

8. INSPECT POSITIVE RECTIFIER HOLDER

(a) Using an ohmmeter, connect one tester probe to the positive (+) terminal and the other to each rectifier terminal.

(b) Reverse the polarity of the tester probes and repeat step (a).

(c) Check that one shows continuity and the other shows no continuity.

If continuity is not as specified, replace the rectifier holder.

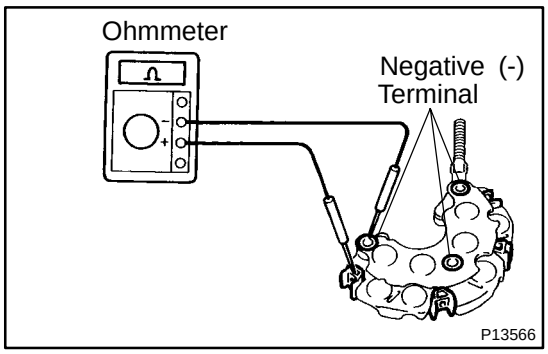

9. INSPECT NEGATIVE RECTIFIER HOLDER

(a) Using an ohmmeter, connect one tester probe to each negative (-) terminal and the other to each rectifier terminal.

(b) Reverse the polarity of the tester probes and repeat step (a).

(c) Check that one shows continuity and the other shows no continuity.

If continuity is not as specified, replace the rectifier holder.

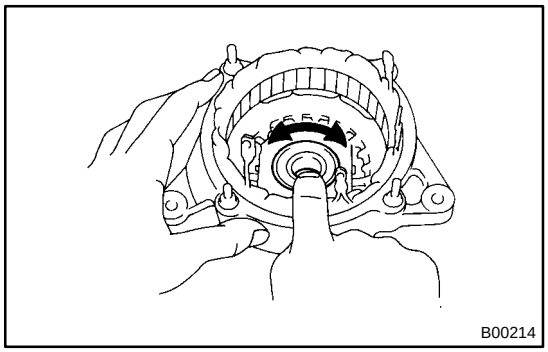

10. INSPECT FRONT BEARING

Check that the bearing is not rough or worn.

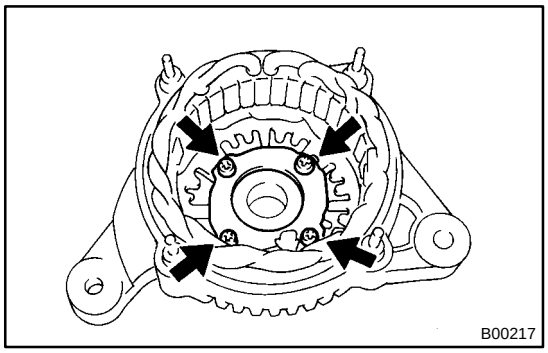

11. IF NECESSARY, REPLACE FRONT BEARING

(a) Remove the 4 screws, bearing retainer and bearing.

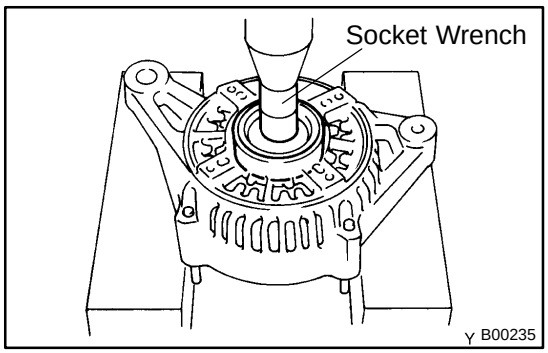

(b) Using a socket wrench and press, press out the bearing.

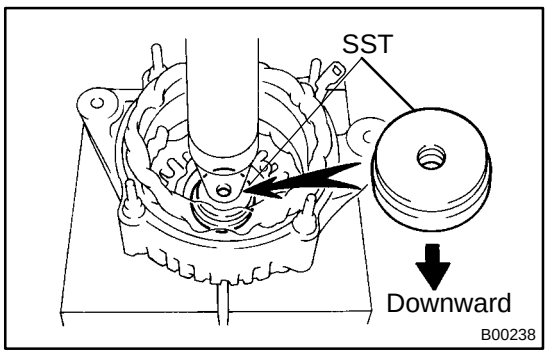

(c) Using SST and a press, press in a new bearing.
SST 09950-60010 (09951-00500)

(d) Install the bearing retainer with the 4 screws.
Torque: 3.0 N·m (31 kgf·cm, 27 in.·lbf)

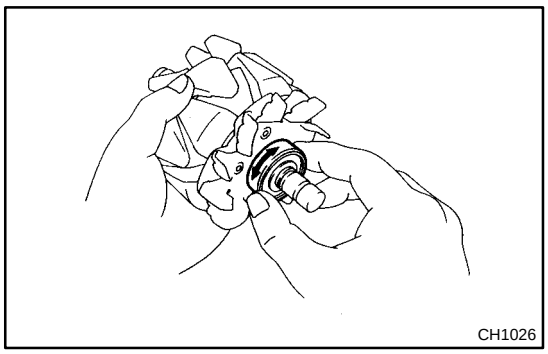

12. INSPECT REAR BEARING

Check that the bearing is not rough or worn.

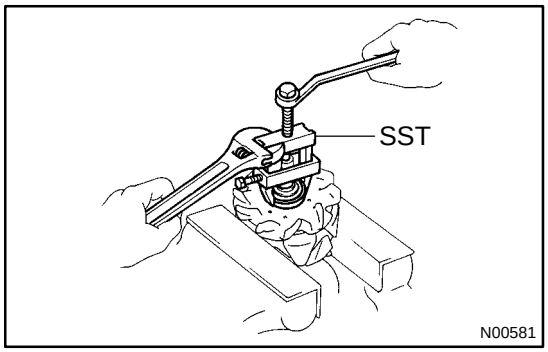

13. IF NECESSARY, REPLACE REAR BEARING

(a) Using SST, remove the bearing cover (outside) and bearing.

SST 09820-00021

NOTICE:

Be careful not to damage the fan.

(b) Remove the bearing cover (inside).

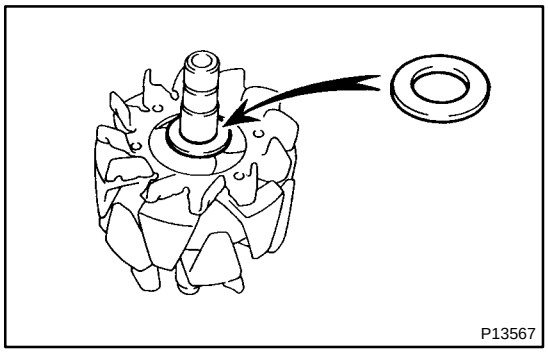

(c) Place the bearing cover (inside) on the rotor.

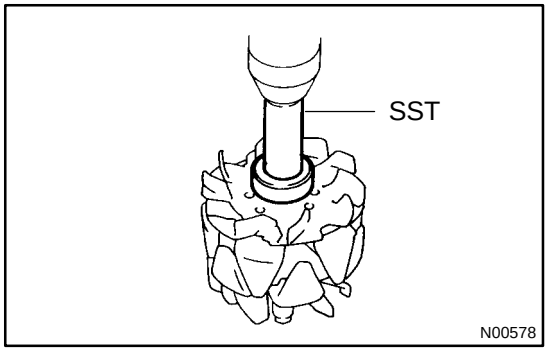

(d) Using SST and a press, press in a new bearing.

SST 09820-00031

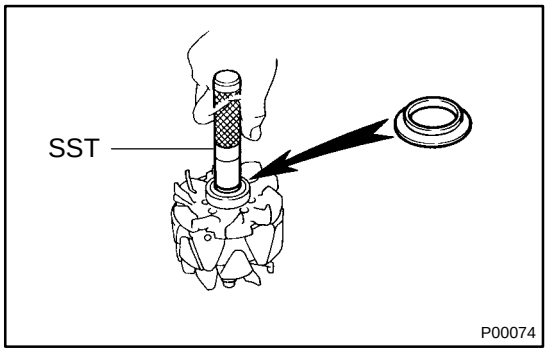

(e) Using SST, push in the bearing cover (outside).

SST 09285-76010

CH028-05

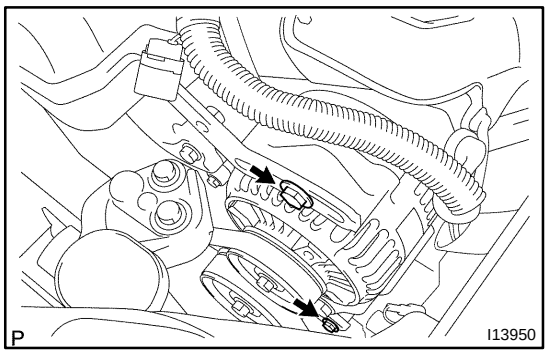

INSTALLATION

INSTALL GENERATOR

(a) Install the generator and temporally tighten the 2 bolts.

(b) Install the drive belt and adjust the belt tension (See page CH-2).

(c) Tighen the 2 bolts.

Torque:
14 mm head 18 N·m (185 kgf·cm, 14 ft·lbf)
17 mm head 54 N·m (550 kgf·cm, 40 ft·lbf)

(d) Connect the generator connector.

(e) Connect the harness clamp.

(f) Connect the generator wire, and install the nut and rubber cap.

(g) Connect the generator wire, and install the rubber cap and nut.

CH027-03

REASSEMBLY

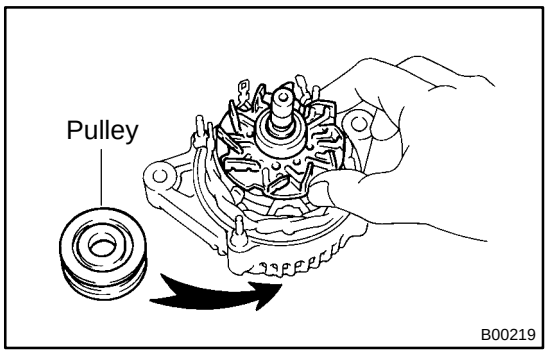

1. INSTALL ROTOR TO DRIVE END FRAME

(a) Place the rectifier end frame on the pulley.

(b) install the rotor to the rectifier end frame.

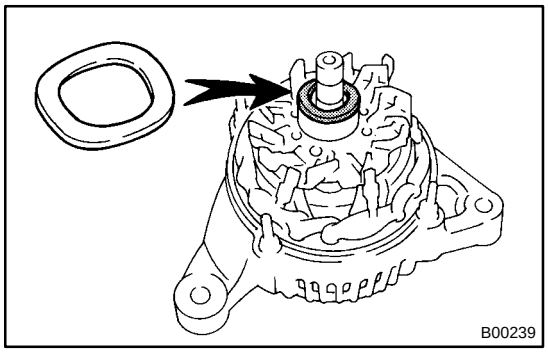

2. INSTALL RECTIFIER END FRAME

(a) Place the generator washer on the rotor.

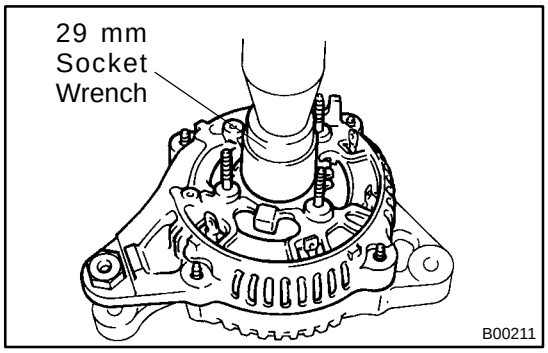

(b) Using a 29 mm socket wrench and press, slowly press in the rectifier end frame.

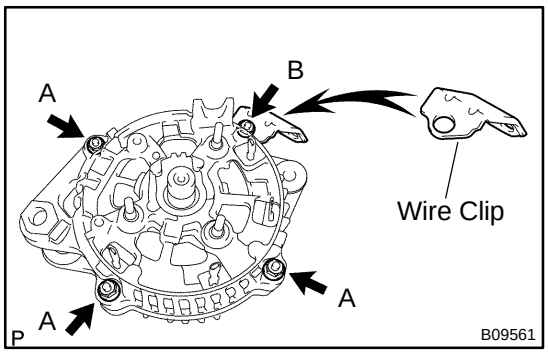

(c) Install the wire clip and 4 nuts.

Torque:
Nut A 4.5 N·m (46 kgf·cm, 40 in.·lbf)
Nut B 5.4 N·m (55 kgf·cm, 48 in.·lbf)

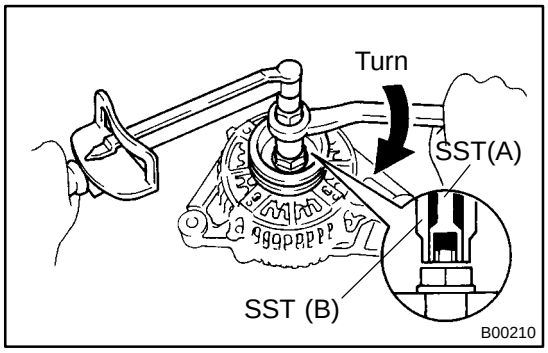

3. INSTALL PULLEY

(a) Install the pulley to the rotor shaft by tightening the pulley nut by hand.

(b) Hold SST (A) with a torque wrench, and tighten SST (B) clockwise to the specified torque.

SST 09820-6301 1

Torque: 39 N·m (400 kgf·cm, 29 ft·lbf)

(c) Check that SST (A) is secured to the pulley shaft.

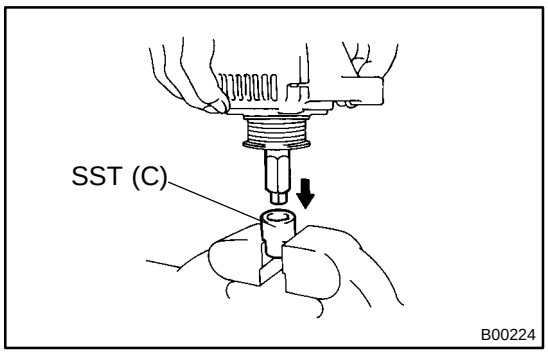

(d) Mount SST (C) in a vise.
(e) Insert SST (B) into SST (C), and attach the pulley nut to SST (C).

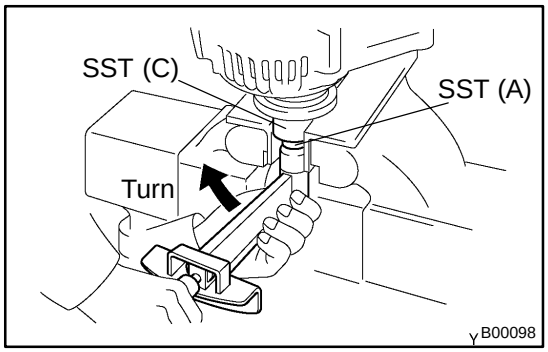

(f) To torque the pulley nut, turn SST (A) in the direction shown in the illustration.
Torque: 111 N·m (1,125 kgf·cm, 81 ft·lbf)
(g) Remove the generator from SST (C).

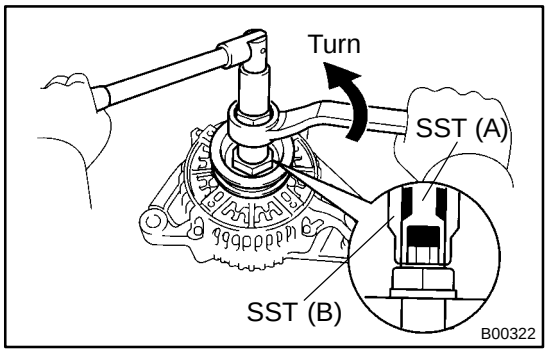

(h) Turn SST (B), and remove SST (A and B).

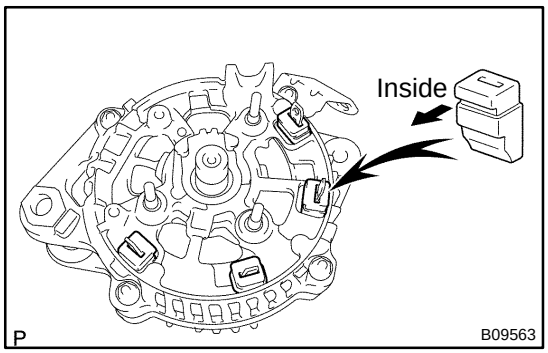

4. INSTALL RECTIFIER HOLDER
(a) Install the 4 rubber insulators on the lead wires.
NOTICE:
Be careful of the rubber insulators installation direction.

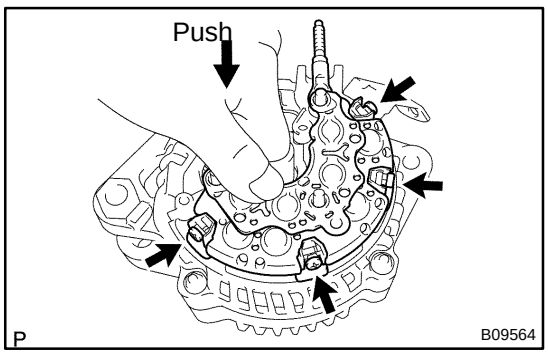

(b) Install the rectifier holder while pushing it with the 4 screws
Torque: 2.9 N·m (30 kgf·cm, 26 in.·lbf)

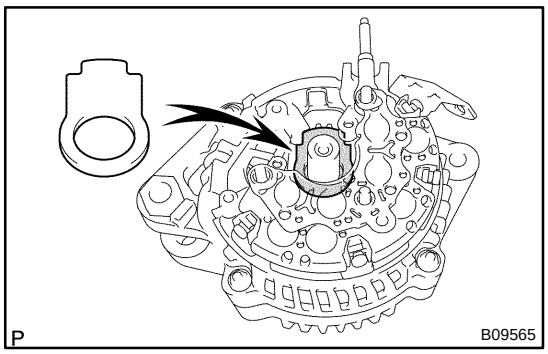

5. INSTALL VOLTAGE REGULATOR AND BRUSH HOLDER

(a) Place the seal plate on the rectifier end frame.

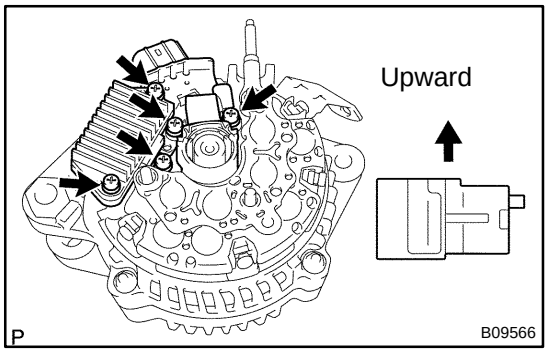

(b) Place the voltage regulator and brush holder on the rectifier end frame.

NOTICE:

Be careful of the holder installation direction.

(c) Install the 5 screws.

Torque: 2.0 N·m (20 kgf·cm, 18 in.·lbf)

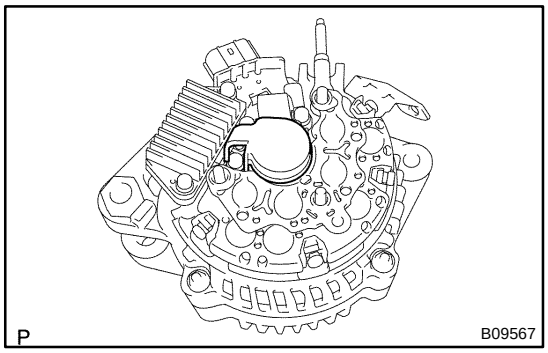

(d) Place the brush holder cover on the brush holder.

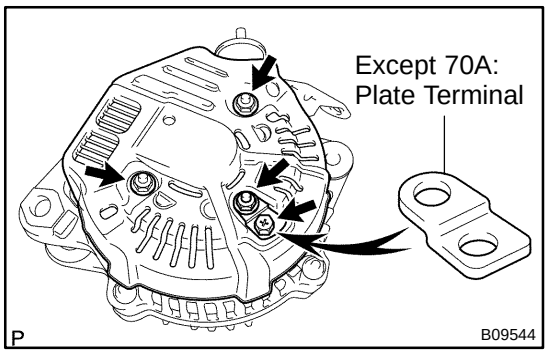

6. INSTALL REAR END COVER

(a) Install the end cover and plate terminal with the bolt and 3 nuts.

Torque:

Nut 4.4 N·m (45 kgf·cm, 39 in.·lbf)

Bolt 3.9 N·m (39 kgf·cm, 35 in.·lbf)

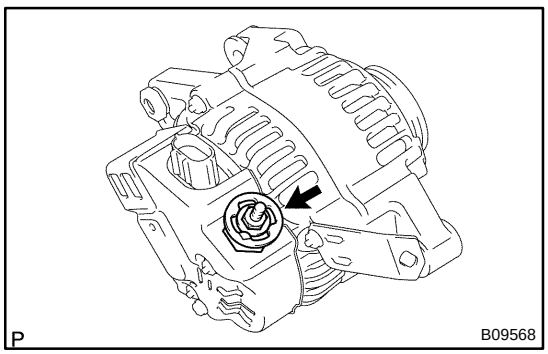

(b) Install the terminal insulator with the nut.

Torque: 4.1 N·m (42 kgf·cm, 36 in.·lbf)

7. CHECK THAT ROTOR ROTATES SMOOTHLY

CH0CC-02

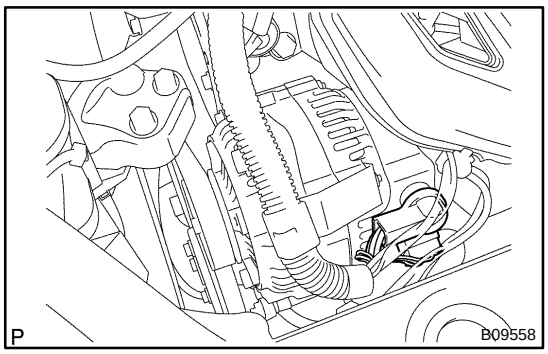

REMOVAL

REMOVE GENERATOR

(a) Disconnect the wire clamp from the wire clip on the rectifier end frame.
(b) Remove the rubber cap and nut, and disconnect the generator wire.
(c) Disconnect the generator connector.
(d) Disconnect the harness clamp from the generator.

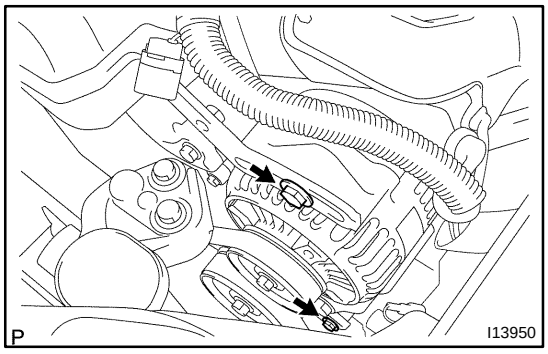

(e) Loosen the 2 bolts and remove the drive belt.
(f) Remove the 2 bolts and generator.

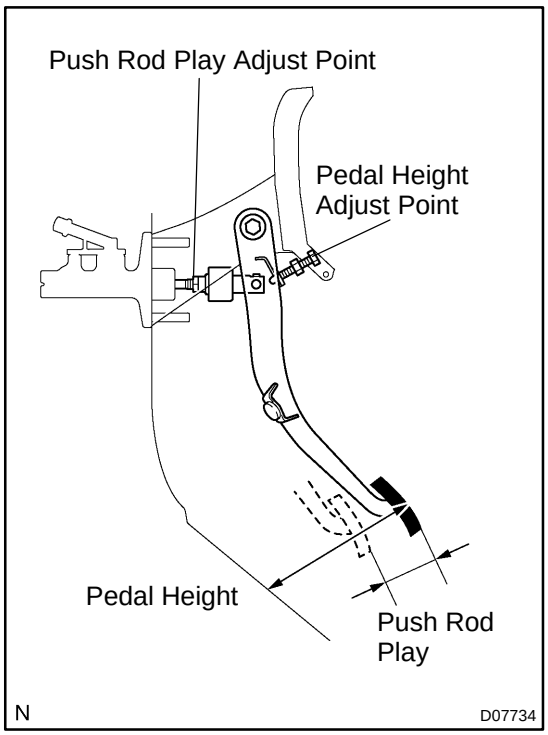

CLUTCH PEDAL

CL09S-01

INSPECTION

1. CHECK THAT PEDAL HEIGHT IS CORRECT

Pedal height from dash panel:
134.3 - 144.3 mm (5.287 - 5.681 in.)

2. IF NECESSARY, ADJUST PEDAL HEIGHT

Loosen the lock nut and turn the stopper bolt until the height is correct. Tighten the lock nut.

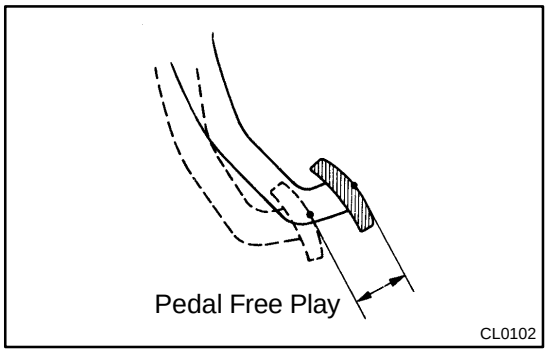

3. CHECK THAT PEDAL FREE PLAY AND PUSH ROD PLAY ARE CORRECT

(a) Push in on the pedal until the beginning of clutch resistance is felt.

Pedal free play: 5.0 - 15.0 mm (0.197 - 0.591 in.)

(b) Gently push on the pedal until the resistance begins to increase a little.

Push rod play at pedal top:
1.0 - 5.0 mm (0.039 - 0.197 in.)

4. IF NECESSARY, ADJUST PEDAL FREE PLAY AND PUSH ROD PLAY

(a) Loosen the lock nut and turn the push rod until the free play and push rod play are correct.
(b) Tighten the lock nut.
(c) After adjusting the pedal free play, check the pedal height.

5. CHECK CLUTCH RELEASE POINT

(a) Pull the parking brake lever and install wheel stopper.
(b) Start the engine and idle the engine.
(c) Without depressing the clutch pedal, slowly shift the shift lever into reverse position until the gears contact.

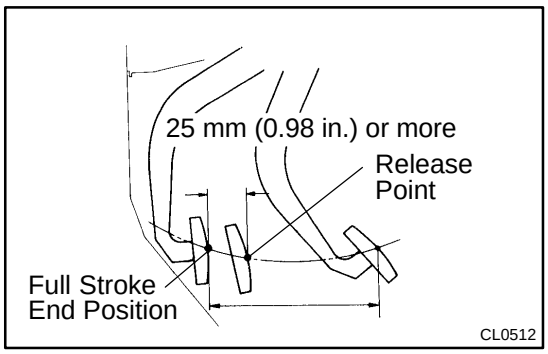

(d) Gradually depress the clutch pedal and measure the stroke distance from where the gear noise stops (release point) up to the full stroke end position.
Standard distance:
25 mm (0.98 in.) or more
(From pedal stroke end position to release point)

If the distance is not as specified, perform the following operation.

- Check pedal height.
- Check push rod play and pedal free play.
- Bleed clutch line.
- Check clutch cover and disc.

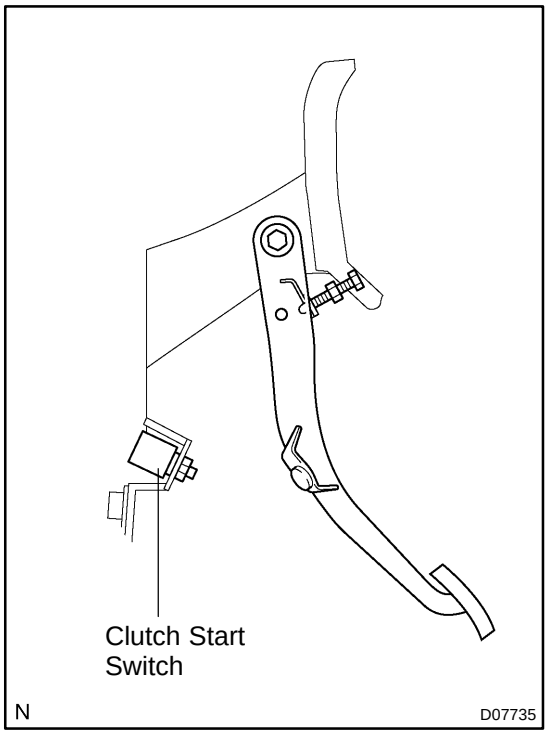

6. CHECK CLUTCH START SYSTEM

(a) Check that the engine does not start when the clutch pedal is released.

(b) Check that the engine starts when the clutch pedal is fully depressed.

If necessary, replace the clutch start switch.

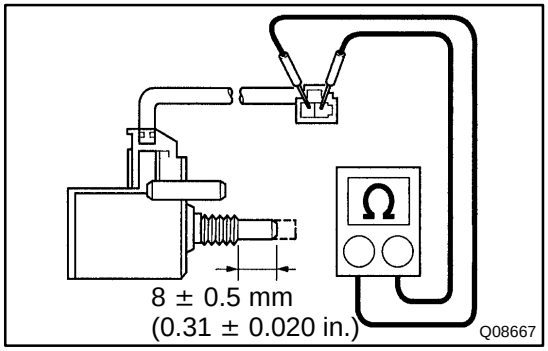

7. INSPECT CLUTCH START SWITCH CONTINUITY

Check the continuity between terminals when the switch is ON and OFF.

Switch position	Condition
ON (pushed)	Continuity
OFF (free)	No continuity

CLUTCH UNIT

COMPONENTS

CL09N-01

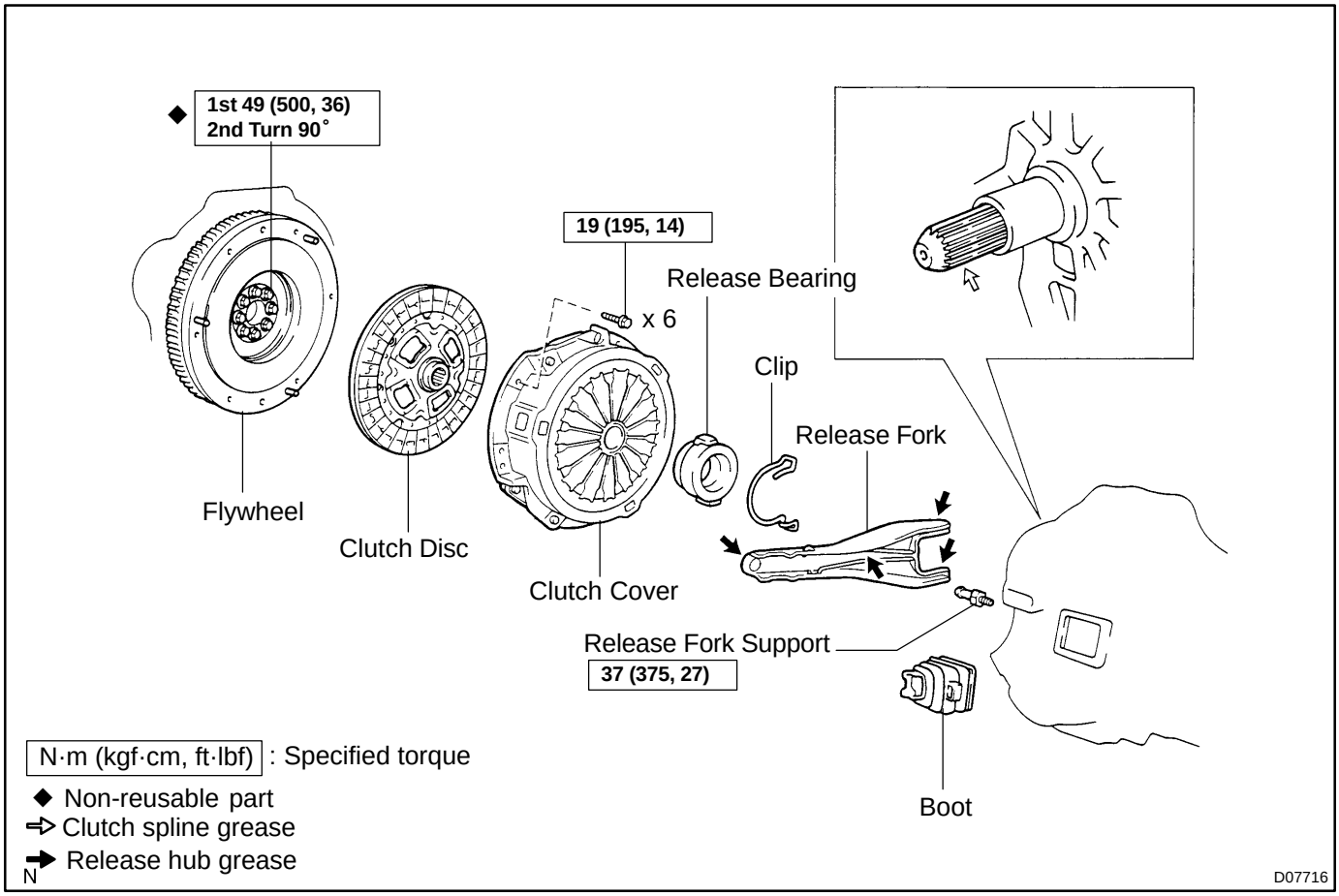

CL09P-01

INSPECTION

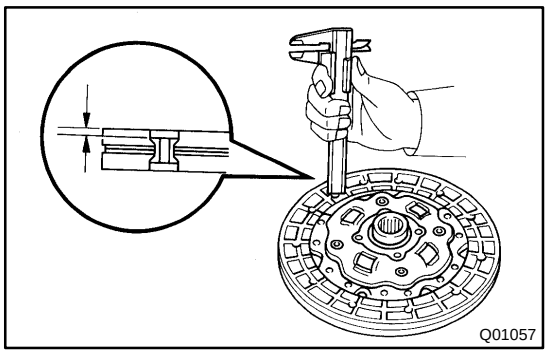

1. INSPECT CLUTCH DISC FOR WEAR OR DAMAGE

Using vernier calipers, measure the rivet head depth.

Minimum rivet depth: 0.3 mm (0.012 in.)

If necessary, replace the clutch disc.

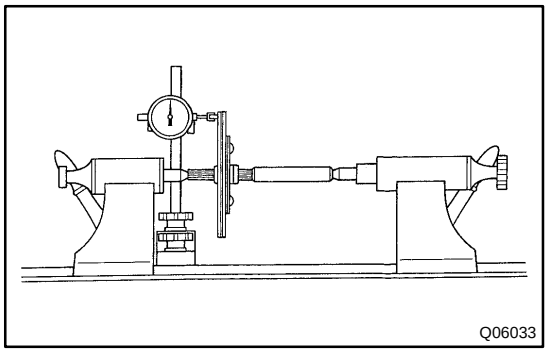

2. INSPECT CLUTCH DISC RUNOUT

Using a dial indicator, check the disc runout.

Maximum runout: 0.8 mm (0.031 in.)

If necessary, replace the clutch disc runout.

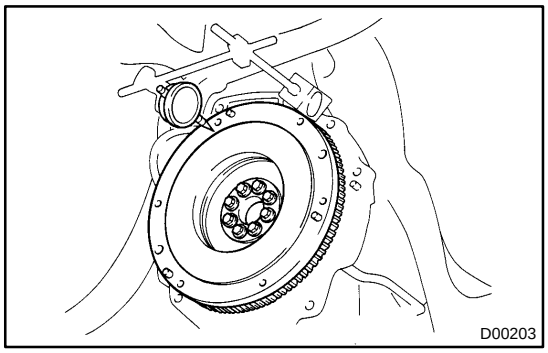

3. INSPECT FLYWHEEL RUNOUT

Using a dial indicator, check the flywheel runout.

Maximum runout: 0.1 mm (0.004 in.)

If necessary, replace the flywheel.

Torque:

1st: 49 N·m (500 kgf·cm, 36 ft·lbf)

2nd: Turn 90°

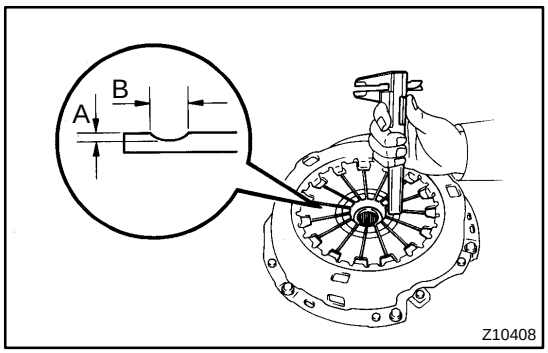

4. INSPECT DIAPHRAGM SPRING FOR WEAR

Using vernier calipers, measure the diaphragm spring for depth and width of wear.

Maximum:

A (Depth): 0.5 mm (0.020 in.)

B (Width): 6.0 mm (0.236 in.)

If necessary, replace the clutch cover.

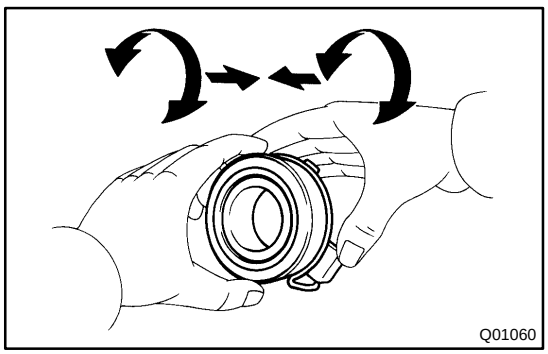

5. INSPECT RELEASE BEARING

Turn the bearing by hand while applying force in the axial direction.

HINT:

The bearing is permanently lubricated and requires no cleaning or lubrication.

If necessary, replace the release bearing.

CL09Q-01

INSTALLATION

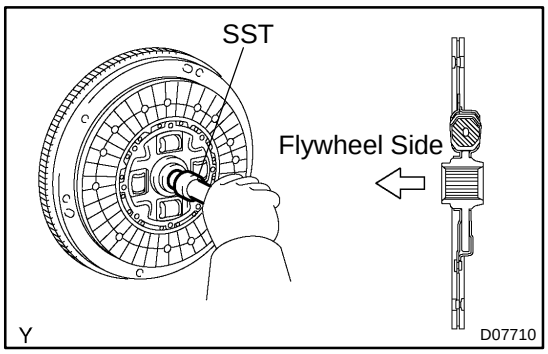

1. INSTALL CLUTCH DISC AND CLUTCH COVER ON FLYWHEEL

(a) Insert SST in the clutch disc, then insert them in the flywheel.

SST 09301-00210

HINT:

Take care not to insert clutch disc in the wrong direction.

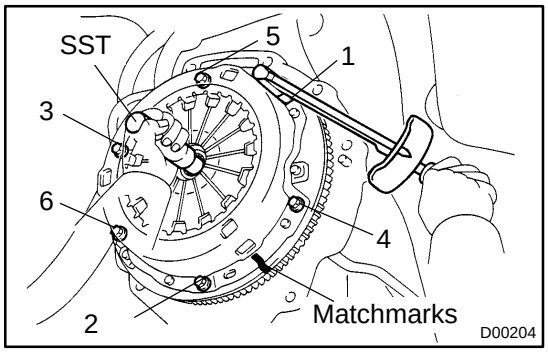

(b) Align the matchmarks on the clutch cover and flywheel.

(c) Following the procedures shown in the illustration, tighten the 6 bolts in the order starting the bolt locating near the knock pin on the top.

Torque: 19 N·m (195 kgf·cm, 14 ft·lbf)

HINT:

- Following the order in the illustration, tighten the bolts at a time evenly.
- Move SST up and down, right and left lightly, after checking that the disc is in the center, tighten the bolts.

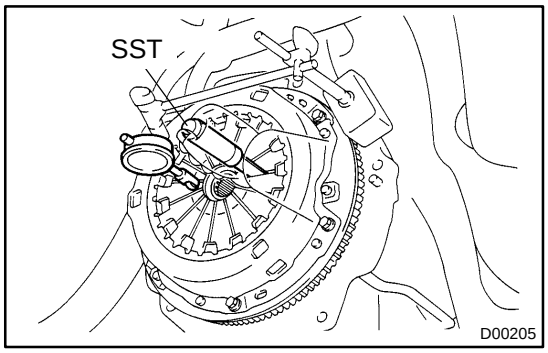

2. CHECK DIAPHRAGM SPRING TIP ALIGNMENT

Using a dial indicator with roller instrument, check the diaphragm spring tip alignment.

Maximum non-alignment: 0.5 mm (0.020 in.)

If alignment is not as specified, using SST, adjust the diaphragm spring tip alignment.

SST 09333-00013

3. INSTALL BOOT AND RELEASE FORK SUPPORT TO TRANSAXLE

Torque: 37 N·m (375 kgf·cm, 27 ft·lbf)

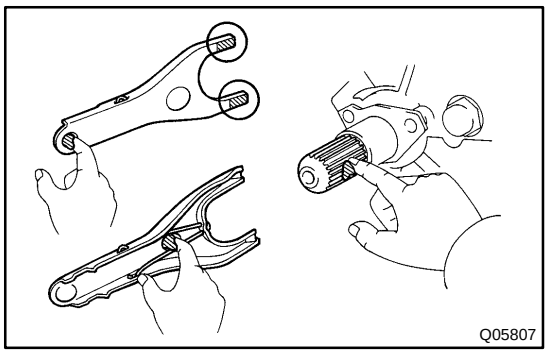

4. APPLY RELEASE HUB GREASE

Apply release hub grease to the release fork and hub contact, release fork and push rod contact and release fork pivot points.

Sealant:

Part No. 08887-01806, RELEASE HUB GREASE or equivalent

5. APPLY CLUTCH SPRING GREASE

Apply clutch spline grease to the input shaft spline.

Sealant:

Part No. 08887-01706, CLUTCH SPLINE GREASE or equivalent

6. INSTALL RELEASE BEARING AND FORK TO TRANSAXLE

Install the bearing to the release fork, and then install them to the transaxle.

7. INSTALL TRANSAXLE TO ENGINE

(See page MX-8)

CL09O-01

REMOVAL

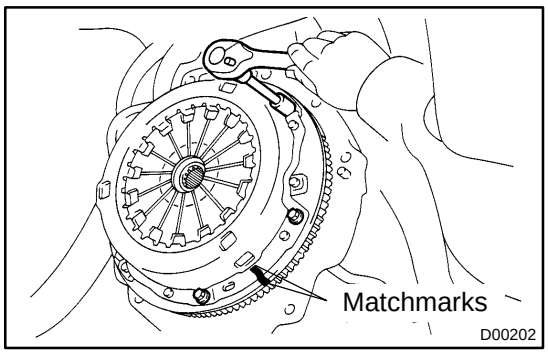

1. REMOVE TRANSAXLE FROM ENGINE
(See page MX-4)

2. REMOVE CLUTCH COVER AND DISC

(a) Align the matchmark on the clutch cover with the one on the flywheel.

(b) Loosen each set bolt one turn at a time until spring tension is released.

(c) Remove the set bolts, and pull off the clutch cover with the clutch disc.

NOTICE:
Do not drop the clutch disc.

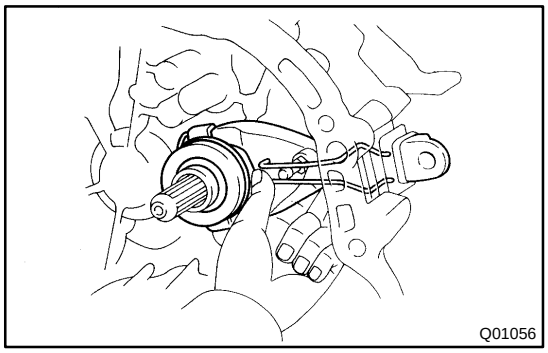

3. REMOVE RELEASE BEARING AND FORK FROM TRANSAXLE

Remove the release bearing with the fork together and then separate them.

4. REMOVE RELEASE FORK SUPPORT AND BOOT

CLUTCH MASTER CYLINDER

COMPONENTS

CL088-03

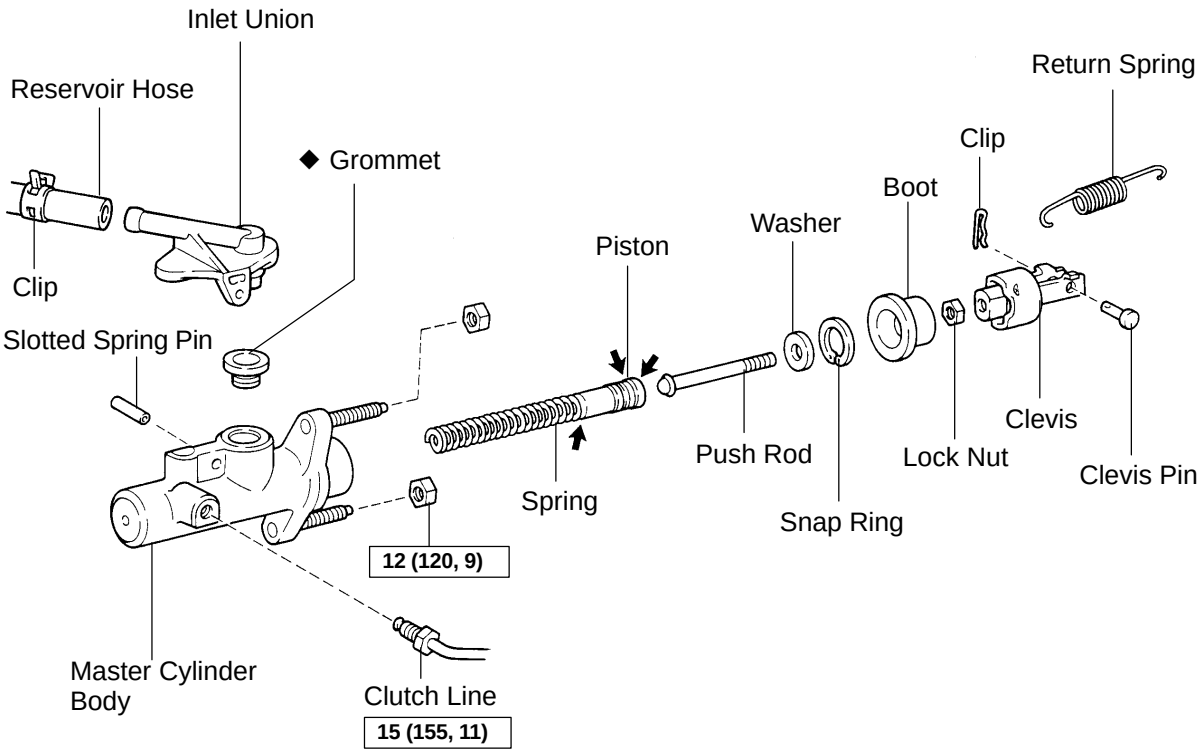

N·m (kgf·cm, ft·lbf) : Specified torque
◆ Non-reusable part
N ⬅ Lithium soap base glycol grease

D07746

CL08A-02

DISASSEMBLY

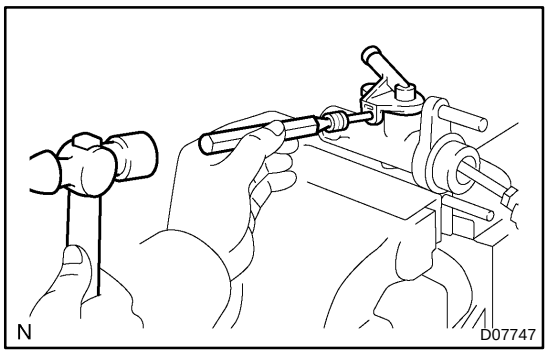

1. REMOVE INLET UNION

(a) Using a pin punch (3 mm) and hammer, drive out the slotted spring pin.

(b) Remove the inlet union and grommet.

2. REMOVE CLEVIS AND BOOT

(a) Loosen the lock nut to remove the clevis and remove the lock nut.

(b) Remove the boot.

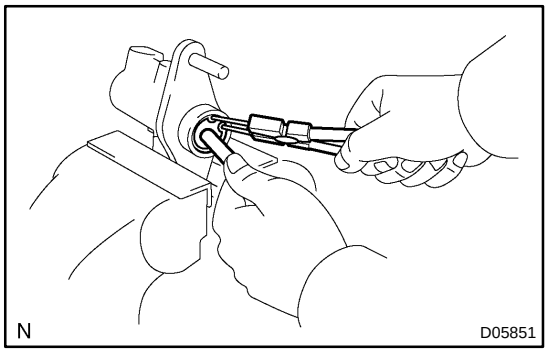

3. REMOVE PUSH ROD

(a) While pushing the push rod, using snap ring pliers, remove the snap ring.

(b) Remove the push rod and washer.

4. REMOVE PISTON WITH SPRING

CL08C-03

INSTALLATION

1. INSTALL MASTER CYLINDER

Install the master cylinder to the body with the 2 nuts.

Torque: 12 N·m (120 kgf·cm, 9 ft·lbf)

2. INSTALL CLEVIS PIN, CLIP AND RETURN SPRING

(a) Install the clevis pin.

(b) Using needle-nose pliers, install the clip.

(c) Using needle-nose pliers, install the return spring.

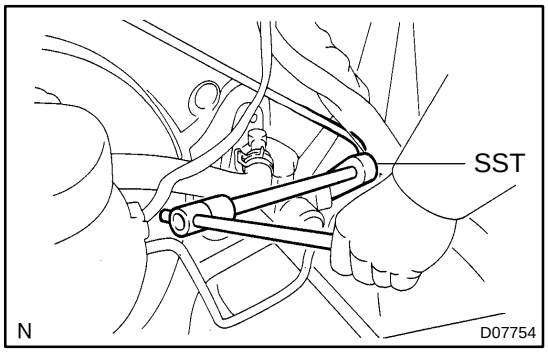

3. CONNECT CLUTCH LINE TO MASTER CYLINDER

Using SST, connect the clutch line.

SST 09023-00100

Torque: 15 N·m (155 kgf·cm, 11 ft·lbf)

4. CONNECT RESERVOIR HOSE TO MASTER CYLINDER

Connect the reservoir hose to the inlet union and using pliers, install the clip.

5. w/ ABS:

INSTALL ABS ACTUATOR (See page BR-37)

6. FILL RESERVOIR WITH BRAKE FLUID AND BLEED CLUTCH SYSTEM

7. CHECK FOR LEAKS

8. ADJUST CLUTCH PEDAL (See page CL-2)

9. FILL BRAKE FLUID UP TO MAX. LINE ON RESERVOIR

10. INSTALL FILLER CAP TO RESERVOIR

CL08B-02

REASSEMBLY

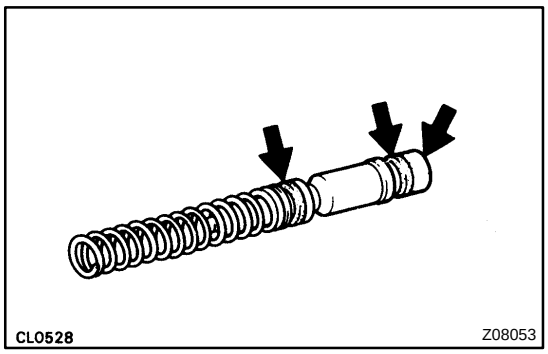

1. COAT PARTS WITH LITHIUM SOAP BASE GLYCOL GREASE, AS SHOWN

2. INSERT PISTON WITH SPRING INTO CYLINDER

3. INSTALL PUSH ROD AND BOOT

(a) Install the washer to the push rod.

(b) Push the push rod to the piston, using snap ring pliers, install the snap ring.

(c) Install the boot.

4. TEMPORARILY INSTALL LOCK NUT AND CLEVIS

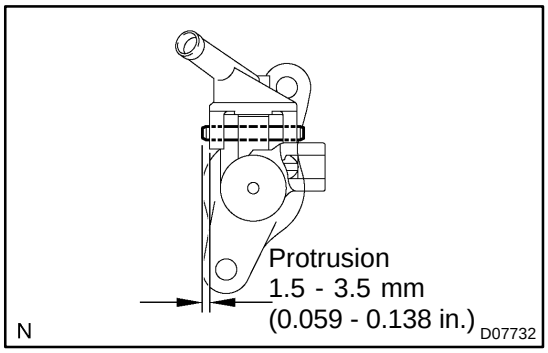

5. INSTALL INLET UNION

(a) Install the inlet union and a new grommet.

(b) Using a pin punch (3 mm) and hammer, drive in the slotted spring pin.

CL089-03

REMOVAL

1. REMOVE FILLER CAP FROM RESERVOIR

2. DRAW OUT BRAKE FLUID WITH SYRINGE

NOTICE:

Do not let brake fluid remain on a painted surface. Wash it off immediately.

3. w/ ABS:

REMOVE ABS ACTUATOR (See page BR-36)

4. DISCONNECT RESERVOIR HOSE FROM MASTER CYLINDER

Using pliers, slide the clip toward the reservoir and disconnect the reservoir hose. Use a container to catch the fluid.

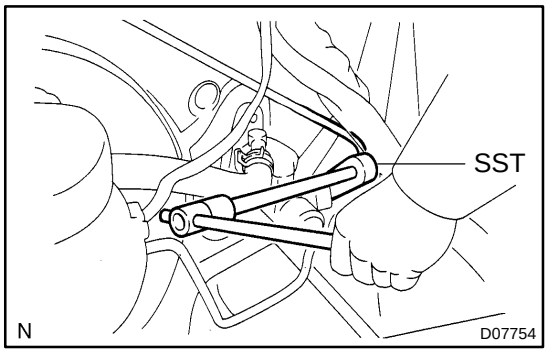

5. DISCONNECT CLUTCH LINE FROM MASTER CYLINDER

Using SST, disconnect the line. Use a container to catch the fluid.

SST 09023-00100

6. REMOVE RETURN SPRING, CLIP AND CLEVIS PIN

(a) Using needle-nose pliers, remove the return spring.

(b) Using needle-nose pliers, remove the clip.

(c) Remove the clevis pin.

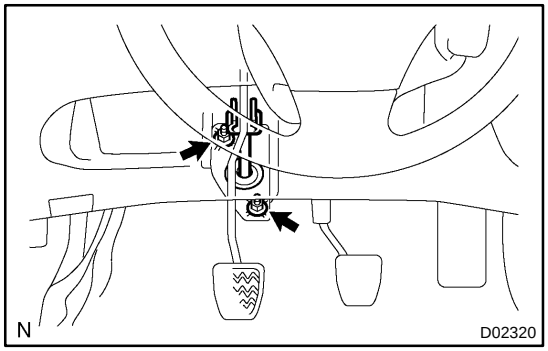

7. REMOVE MASTER CYLINDER

Remove the 2 nuts and master cylinder from the body.

CLUTCH RELEASE CYLINDER

CL02U-05

COMPONENTS

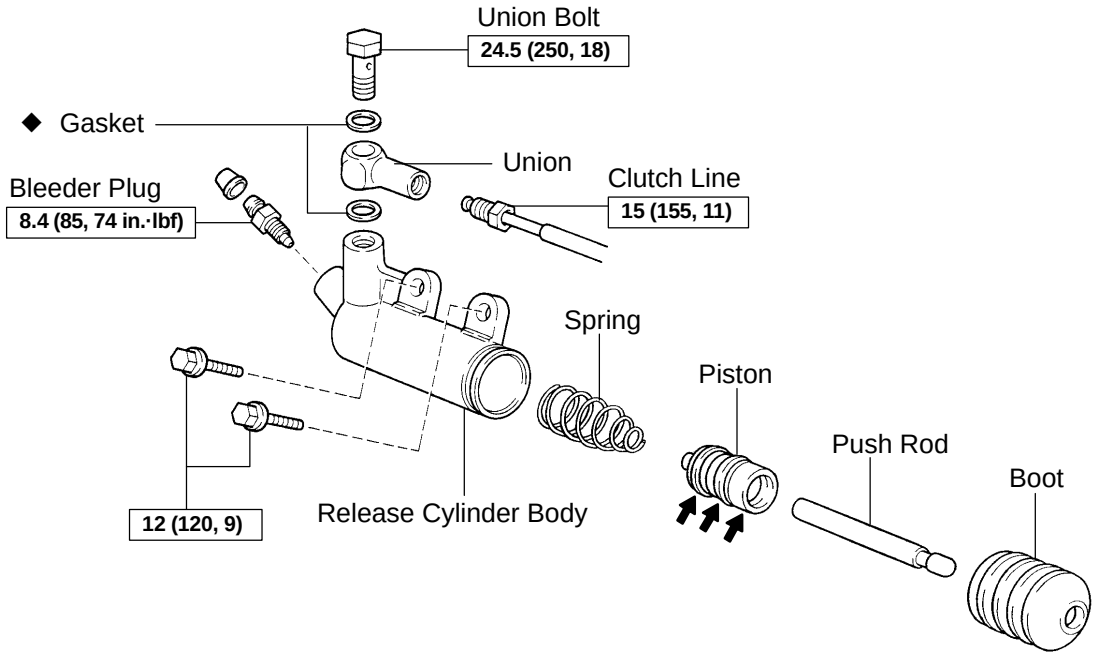

N·m (kgf·cm, ft·lbf) : Specified torque
◆Non-reusable part
Lithium soap base glycol grease

D00198

CL02W-03

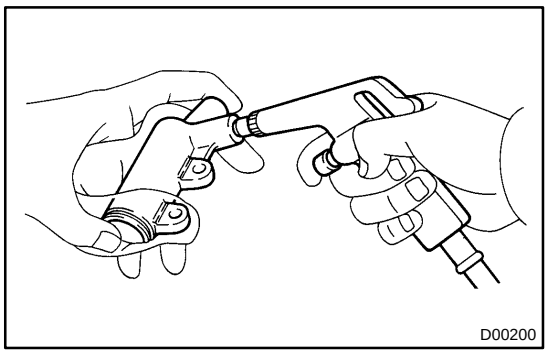
D00200

DISASSEMBLY

1. **REMOVE BLEEDER PLUG**
2. **REMOVE UNION BOLT, 2 GASKETS AND UNION**
3. **PULL OUT BOOT WITH PUSH ROD**
4. **REMOVE PISTON WITH SPRING**

Using compressed air, remove the piston with the spring from the cylinder.

NOTICE:

- **Blowing off the air may cause the piston's jump-out. When removing the piston, hold it with your hand using a waste cloth.**
- **Take care not to splash brake fluid when air-blowing.**

CL07E-02

INSTALLATION

1. INSTALL RELEASE CYLINDER WITH 2 BOLTS
Torque: 12 N·m (120 kgf·cm, 9 ft·lbf)

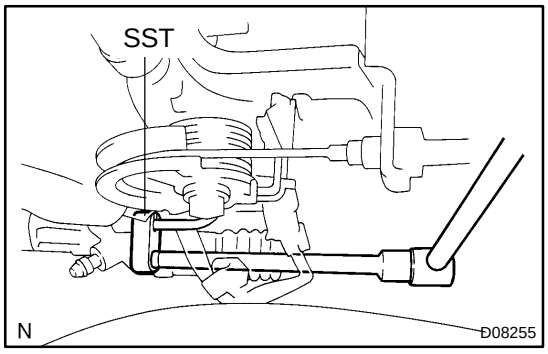

2. CONNECT CLUTCH LINE
Using SST, connect the clutch line.
SST 09023-00100
Torque: 15 N·m (155 kgf·cm, 11 ft·lbf)

3. FILL CLUTCH RESERVOIR WITH BRAKE FLUID AND BLEED CLUTCH SYSTEM

4. CHECK FOR LEAKS

CL02X-03

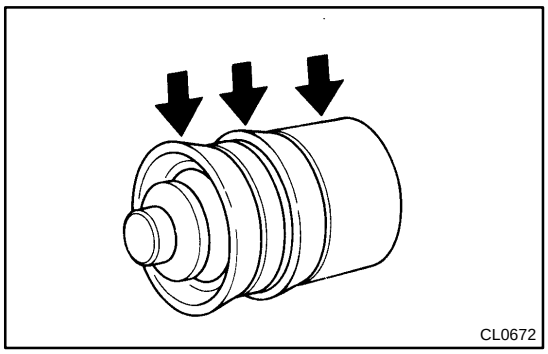
CL0672

REASSEMBLY

1. **COAT PISTON WITH LITHIUM SOAP BASE GLYCOL GREASE, AS SHOWN**
2. **INSTALL PISTON WITH SPRING INTO CYLINDER**
3. **INSTALL BOOT WITH PUSH ROD TO CYLINDER**
4. **INSTALL UNION AND 2 NEW GASKETS WITH UNION BOLT**
   Torque: 24.5 N·m (250 kgf·cm, 18 ft·lbf)
5. **INSTALL BLEEDER PLUG**
   Torque: 8.4 N·m (85 kgf·cm, 74 in.·lbf)

CL02V-03

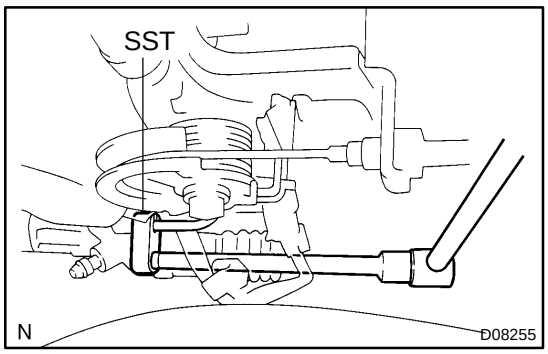

REMOVAL

1. DISCONNECT CLUTCH LINE

(a) Using SST, disconnect the clutch line.
SST 09023-00100

(b) Use a container to catch the fluid.

2. REMOVE 2 BOLTS AND PULL OUT RELEASE CYLINDER

TROUBLESHOOTING

CL02N-06

PROBLEM SYMPTOMS TABLE

Use the table below to help you find the cause of the problem. The numbers indicate the priority of the likely cause of the problem. Check each part in order. If necessary, replace these parts.

Symptom	Suspect Area	See page
Clutch grabs/chatters	12.Engine mounting (Loosen)	-
	13.Clutch disc (Runout is excessive)	CL-14
	14.Clutch disc (Oily)	CL-14
	15.Clutch disc (Worn out)	CL-14
	16.Clutch disc torsion rubber (Damaged)	CL-14
	17.Clutch disc (Glazed)	CL-14
	18.Diaphragm spring (Out of tip alignment)	CL-14
Clutch pedal spongy	1. Clutch line (Air in line)	-
	2. Master cylinder cup (Damaged)	CL-4
	3. Release cylinder cup (Damaged)	CL-9
Clutch noisy	1. Release bearing (Worn, dirty, or damaged)	CL-14
	2. Clutch disc torsion rubber (Damaged)	CL-14
Clutch slips	1. Clutch pedal (Free play out of adjustment)	CL-2
	2. Clutch disc (Oily)	CL-14
	3. Clutch disc (Worn out)	CL-14
	4. Diaphragm spring (Damaged)	CL-14
	5. Pressure plate (Distortion)	CL-14
	6. Flywheel (Distortion)	-
Clutch does not disengage	1. Clutch pedal (Free play out of adjustment)	CL-2
	2. Clutch line (Air in line)	-
	3. Master cylinder cup (Damaged)	CL-4
	4. Release cylinder cup (Damaged)	CL-9
	5. Clutch disc (out of true)	CL-14
	6. Clutch disc (Runout is excessive)	CL-14
	7. Clutch disc (Lining broken)	CL-14
	8. Clutch disc (Dirty or burned)	CL-14
	9. Clutch disc (Oily)	CL-14
	10.Clutch disc (Lack of spline grease)	CL-14
	11.Diaphragm spring (Damaged)	CL-14
	12.Diaphragm spring (Out of tip alignment)	CL-14
	13.Pressure plate (Distortion)	CL-14

COOLING FAN RELAY

CO0VA-02

INSPECTION

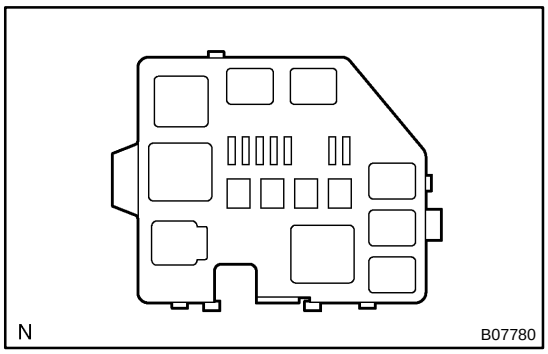

1. INSPECT NO. 1 COOLING FAN RELAY

(a) Remove the relay box cover.

(b) Remove the No. 1 cooling fan relay. (Marking: FAN NO. 1)

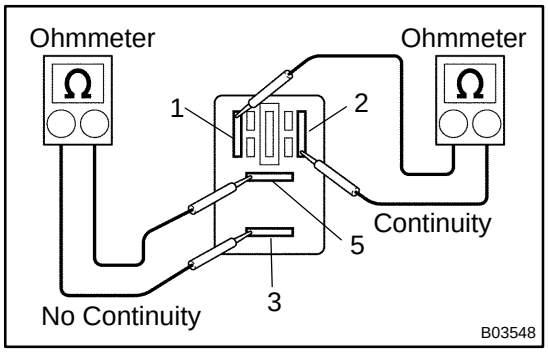

(c) Inspect the No. 1 cooling fan relay continuity.

(1) Using an ohmmeter, check that continuity exists between terminals 1 and 2.

If no continuity exists, replace the relay.

(2) Check that no continuity exists between terminals 3 and 5.

If continuity exists, replace the relay.

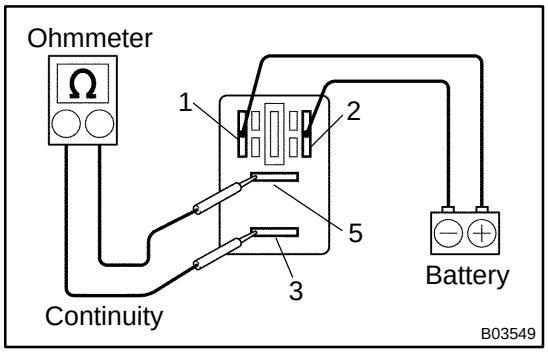

(d) Inspect the No. 1 cooling fan relay operation.

(1) Apply battery voltage across terminals 1 and 2.

(2) Using an ohmmeter, check that continuity exists between terminals 3 and 5.

If no continuity exists, replace the relay.

(e) Reinstall the No. 1 cooling fan relay.

(f) Reinstall the relay box cover.

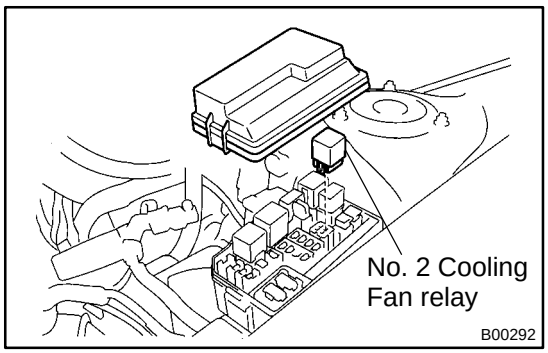

2. INSPECT NO. 2 COOLING FAN RELAY

(a) Remove the relay box cover.

(b) Remove the No. 2 cooling fan relay. (Marking: FAN NO. 2)

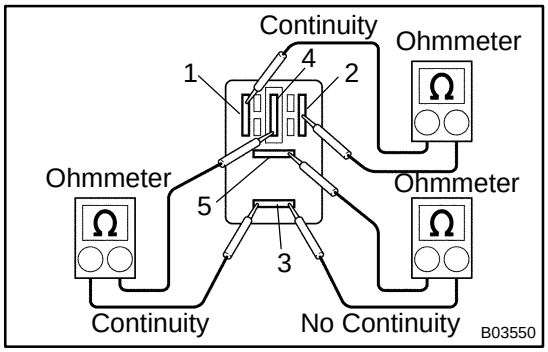

(c) Inspect the No. 2 cooling fan relay continuity.

(1) Using an ohmmeter, check that continuity exists between terminals 1 and 2.

If no continuity exists, replace the relay.

(2) Check that continuity exists between terminals 3 and 4.

If no continuity exists, replace the relay.

(3) Check that no continuity exists between terminals 3 and 5.

If continuity exists, replace the relay.

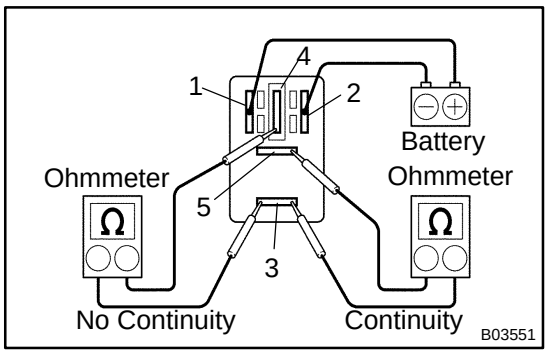

(d) Inspect the No. 2 cooling fan relay operation.
  (1) Apply battery voltage across terminals 1 and 2.
  (2) Using an ohmmeter, check that no continuity exists between terminals 3 and 4.

If continuity exists, replace the relay.

  (3) Using an ohmmeter, check that continuity exists between terminals 3 and 5.

If no continuity exists, replace the relay.

(e) Reinstall the No. 2 cooling fan relay.
(f) Reinstall the relay box cover.

COOLANT

CO04D-03

INSPECTION

HINT:

Check the coolant level when the engine is cold.

1. CHECK ENGINE COOLANT LEVEL AT RESERVOIR

The engine coolant level should be between the ”LOW” and ”FULL” line.

If low, check for leaks and add ”Toyota Long Life Coolant” or equivalent up to the ”FULL” line.

2. CHECK ENGINE COOLANT QUALITY

(a) Remove the radiator cap.

CAUTION:

To avoid the danger of being burned, do not remove the radiator cap while the engine and radiator are still hot, as fluid and steam can be blown out under pressure.

(b) There should not be any excessive deposits of rust or scale around the radiator cap or radiator filler hole, and the coolant should be free from oil.

If excessively dirty, replace the coolant.

(c) Reinstall the radiator cap.

CO04E-04

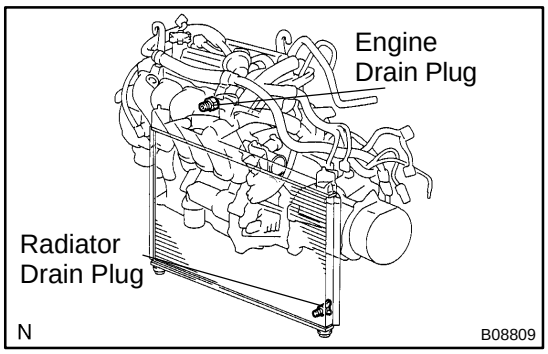

REPLACEMENT

1. DRAIN ENGINE COOLANT

(a) Remove the radiator cap.

CAUTION:

To avoid the danger of being burned, do not remove the radiator cap while the engine and radiator are still hot, as fluid and steam can be blown out under pressure.

(b) Loosen the radiator drain plug (on the right side of the radiator lower tank) and engine drain plug on the engine coolant drain union (on the right front of the cylinder block), and drain the coolant.

(c) Close the drain plugs.

Torque: 13 N·m (130 kgf·cm, 9 ft·lbf) for engine

2. FILL ENGINE COOLANT

(a) Slowly fill the system with coolant.

- Use of improper coolants may damage the engine cooling system.
- Use ”Toyota Long Life Coolant” or equivalent and mix it with plain water according to the manufacture directions.
- Use of the coolant which includes more than 50% [freezing protection down to -35˚C (-31˚F)] or 60% [freezing protection down to -50˚C (-58˚F)] of ethylene-glycol is recommended, but not more than 70%.

NOTICE:

- **Do not use an alcohol type coolant or plain water alone.**
- **The coolant should be mixed with plain water (preferably demineralized water or distilled water).**

Capacity:

M/T	4.4 litters (4.7 US qts, 3.9 lmp. qts)
A/T	4.3 litters (4.5 US qts, 3.8 lmp. qts)

(b) Install the radiator cap.

(c) Start the engine, and bleed the cooling system.

(d) Refill the engine coolant reservoir with coolant until it reaches ”FULL” line.

3. CHECK FOR COOLANT LEAKS

4. CHECK ENGINE COOLANT SPECIFIC GRAVITY IS CORRECT

CO0V6-02

COMPONENTS

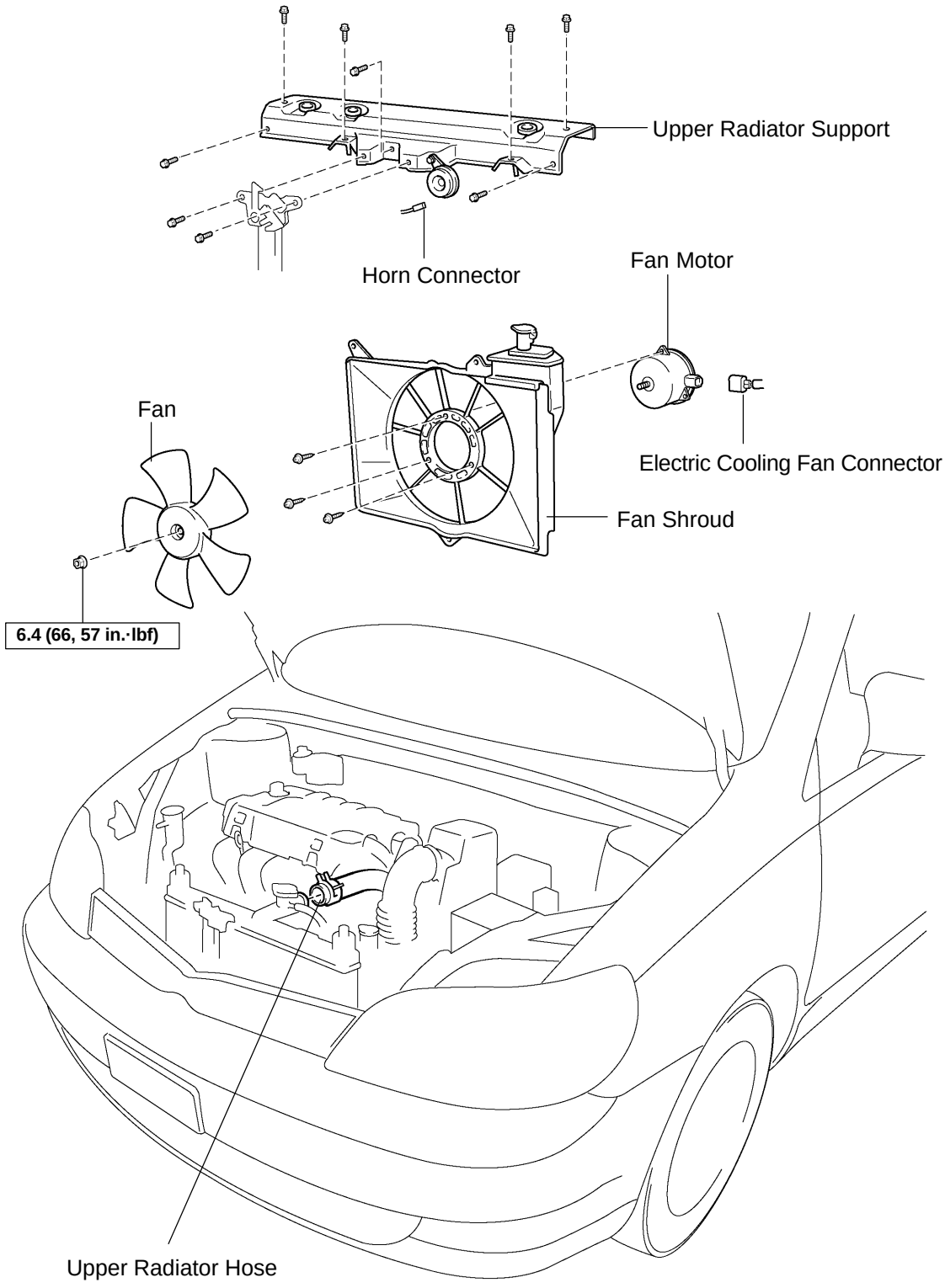

N

N·m (kgf·cm, ft·lbf) : Specified torque

B09357

CO0V7-01

DISASSEMBLY

1. REMOVE FAN

Remove the nut and fan.

2. REMOVE FAN MOTOR

Remove the 3 screws and fan motor.

CO050-03

INSTALLATION

1. INSTALL COOLING FAN

(a) Install the cooling fan with the 3 bolts.
Torque: 7.5 N·m (76 kgf·cm, 66 in.·lbf)

(b) Connect the cooling fan connector.

2. CONNECT UPPER RADIATOR HOSE TO RADIATOR

3. INSTALL RADIATOR UPPER SUPPORT

4. FILL WITH ENGINE COOLANT

5. START ENGINE AND CHECK FOR COOLANT LEAKS

ELECTRIC COOLING FAN

CO0V5-02

ON-VEHICLE INSPECTION

1. CHECK COOLING FAN OPERATION WITH LOW TEMPERATURE (Below 83˚C (181˚F))

(a) Turn the ignition switch ON.

(b) Check that the cooling fan stops.

If not, check the cooling fan relay and ECT switch, and check for a separated connector or severed wire between the cooling fan relay and ECT switch.

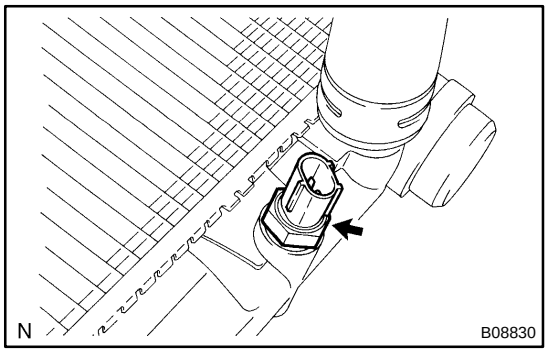

(c) Disconnect the ECT switch connector.

(d) Check that the cooling fan rotates.

If not, check the fan main relay, cooling fan relay, cooling fan, fuses, and check for short circuit between the cooling fan relay and ECT switch.

(e) Reconnect the ECT switch connector.

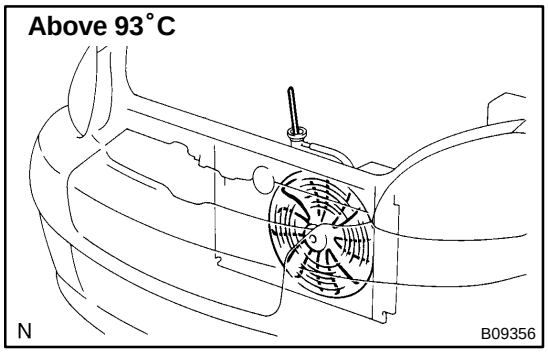

2. CHECK COOLING FAN OPERATION WITH HIGH TEMPERATURE (Above 93˚C (199˚F))

(a) Start the engine, and raise coolant temperature to above 93˚C (199˚F).

(b) Check that the cooling fan rotates.

If not, replace the ECT switch.

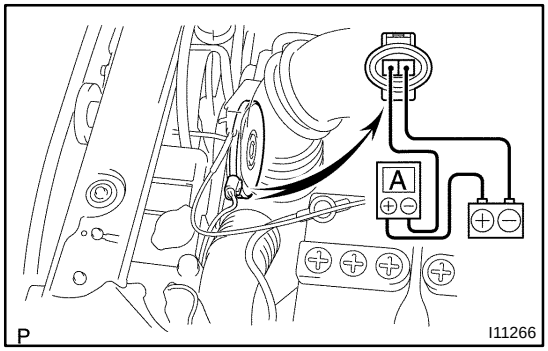

3. INSPECT COOLING FANS

(a) Disconnect the cooling fan connector.

(b) Connect battery and ammeter to the connector.

(c) Check that the cooling fan rotates smoothly, and check the reading on the ammeter.

Standard amperage: 7.8 - 11.8 A

(d) Reconnect the cooling fan connector.

4. INSPECT FAN REGISTER

(See page AC-74)

CO0V8-01

REASSEMBLY

1. INSTALL FAN MOTOR

Install the fan motor with the 3 screws.

Torque:
w/ A/C 2.65 N·m (27 kgf·cm, 23 in.·lbf)
w/o A/C 3.98 N·m (41 kgf·cm, 35 in.·lbf)

2. INSTALL FAN

Install the fan with the nut.

Torque: 6.4 N·m (66 kgf·cm, 57 in.·lbf)

CO04X-02

REMOVAL

1. DRAIN ENGINE COOLANT

2. DISCONNECT UPPER RADIATOR HOSE FROM RADIATOR

3. REMOVE UPPER RADIATOR SUPPORT

4. REMOVE COOLING FAN

(a) Disconnect the cooling fan connector and reservoir hose.

(b) Remove the 3 bolts and cooling fan.

ENGINE COOLANT TEMPERATURE (ECT) SWITCH

CO0XG-01

INSPECTION

1. DRAIN ENGINE COOLANT

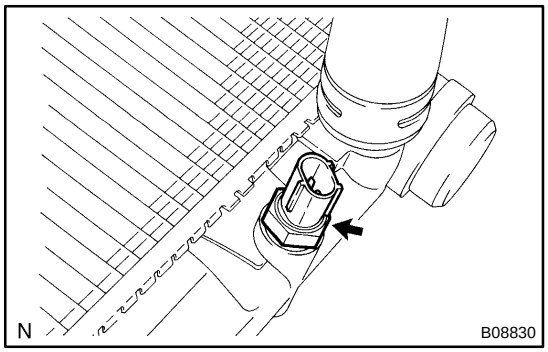

2. REMOVE ECT SWITCH

(a) Disconnect the connector.
(b) Remove the ECT switch.
(c) Remove the O-ring from the ECT switch.

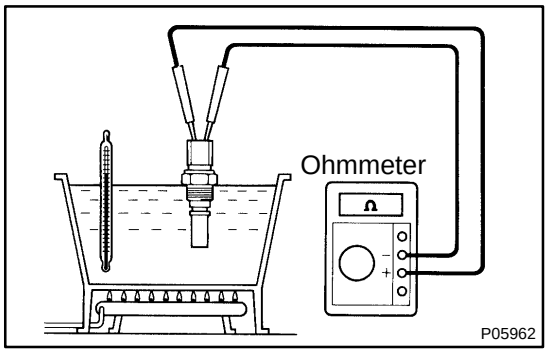

3. INSPECT ECT SWITCH

(a) Using an ohmmeter, check that there is no continuity between the terminals when the coolant temperature is above 93˚C (199˚F).

If there is continuity, replace the switch.

(b) Using an ohmmeter, check that there is continuity between the terminals when the coolant temperature is below 83˚C (181˚F).

If there is no continuity, replace the switch.

4. REINSTALL ECT SWITCH

(a) Install a new O-ring to the ECT switch.
(b) Install the ECT switch.
(c) Connect the connector.

5. REFILL WITH ENGINE COOLANT

6. START ENGINE AND CHECK FOR COOLANT LEAKS

CO0V3-02

COMPONENTS

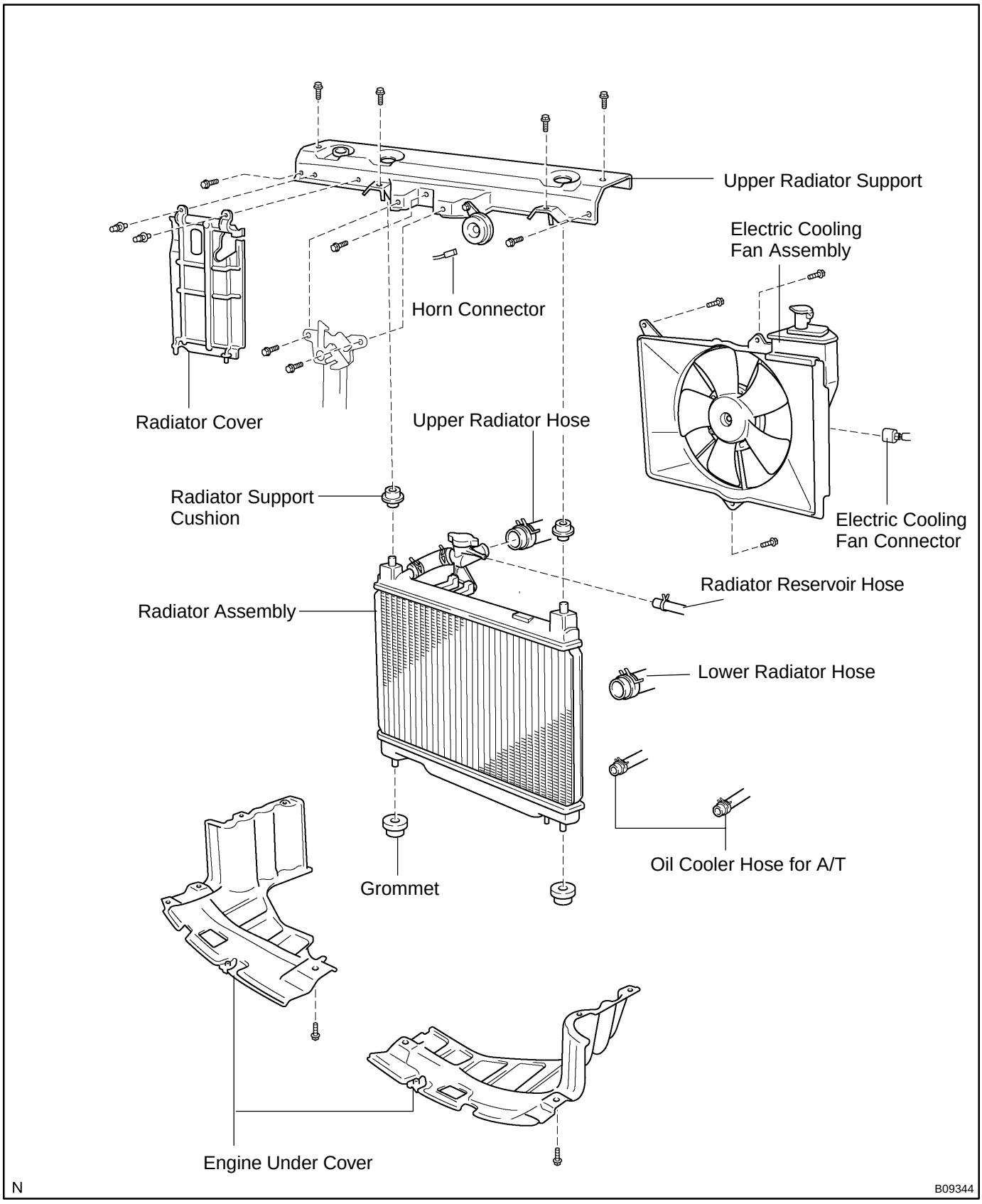

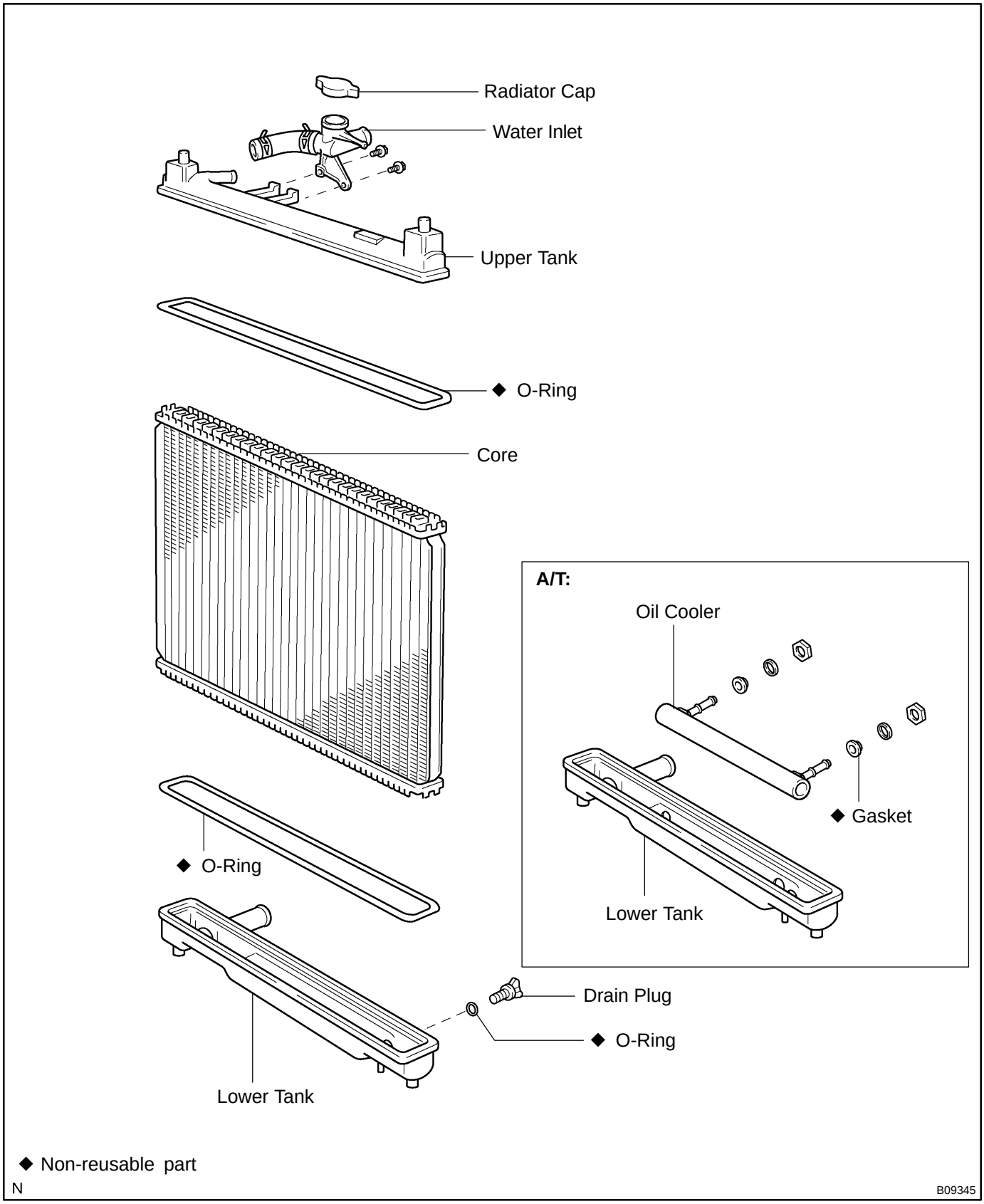

◆ Non-reusable part

N

B09345

CO0XE-01

DISASSEMBLY

1. REMOVE DRAIN PLUG

(a) Remove the drain plug.

(b) Remove the O-ring.

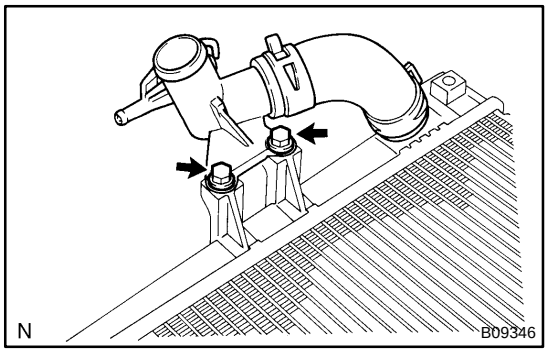

2. REMOVE WATER FILTER

(a) Disconnect the No. 3 radiator hose from the radiator.

(b) Remove the 2 bolts and water filter.

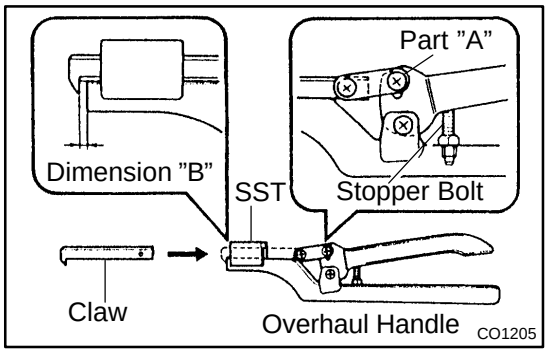

3. ASSEMBLE SST

SST 09230-01010

(a) Install the claw to the overhaul handle, inserting it in the hole in part "A" as shown in the illustration.

(b) While gripping the handle, adjust the stopper bolts so that dimension "B" shown in the illustration is 0.2 - 0.3 mm (0.008 - 0.012 in.).

NOTICE:

If this adjustment is not done the claw may be damaged.

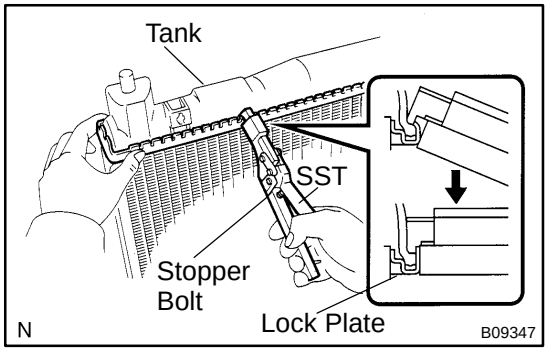

4. UNCAULK LOCK PLATES

Using SST to release the caulking, squeeze the handle until stopped by the stopper bolts.

SST 09230-01010

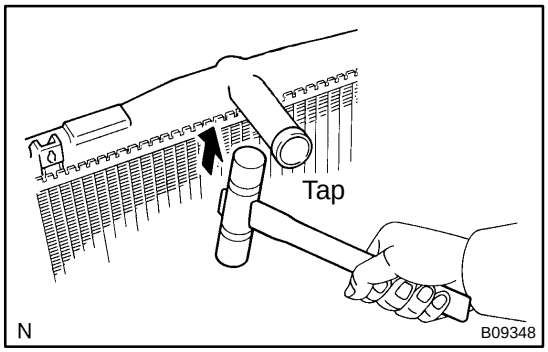

5. REMOVE TANKS AND O-RINGS

Lightly tap the bracket of the radiator (or radiator inlet or outlet) with a soft-faced hammer, and remove the tank and the O-ring.

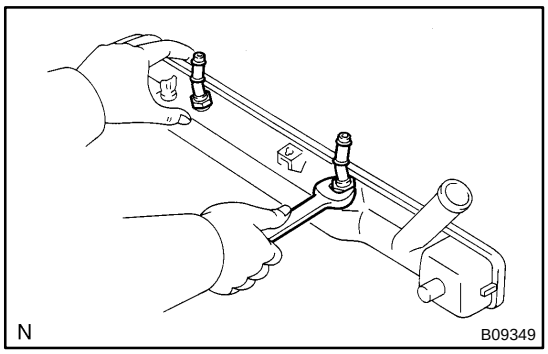

6. A/T:

REMOVE OIL COOLER FROM LOWER TANK

(a) Remove the 2 nuts and 2 plate washers.

(b) Remove the oil cooler and 2 O-rings.

CO04S-05

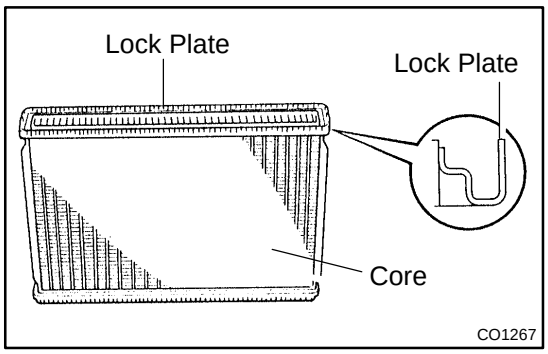

INSPECTION

INSPECT LOCK PLATE FOR DAMAGE

HINT:

- If the sides of the lock plate groove are deformed,reassembly of the tank will be impossible.
- Therefore, first correct any deformation with pliers or similar object. Water leakage will result if the bottom of the lock plate groove is damaged.

NOTICE:

The radiator can only be recaulked 2 times. After the 2nd time, the radiator core must be replaced.

CO0V4-02

INSTALLATION

1. INSTALL ELECTRIC COOLING FAN TO RADIATOR

Install the cooling fan with the 3 bolts.

Torque: 7.5 N·m (80 kgf·cm, 66 in.·lbf)

2. INSTALL RADIATOR ASSEMBLY

(a) Install the 2 radiator support cushions and grommets to the radiator.
(b) Attach the 2 grommets on the radiator to the body brackets.
(c) Install the upper radiator supports with the 7 (w/o A/C) or 9 (w/ A/C) bolts.
(d) Connect the upper radiator hose.
(e) Connect the lower radiator hose.
(f) Connect the radiator reservoir hose.
(g) A/T:
Connect the 2 oil cooler hoses to the oil cooler pipes.
(h) Install the radiator cover with the 2 clips.
(i) Connect the horn connector.
(j) Connect the electric cooling fan connector.

3. INSTALL ENGINE UNDER COVERS

4. FILL WITH ENGINE COOLANT

5. START ENGINE AND CHECK FOR COOLANT LEAKS

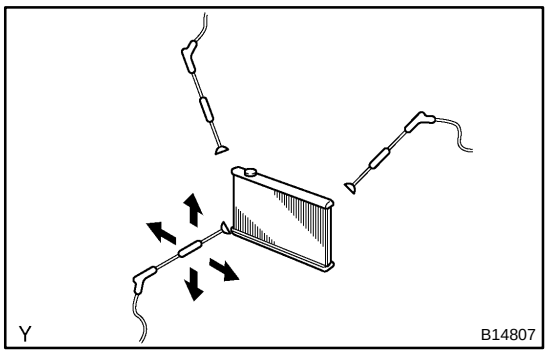

RADIATOR

CO1BG-01

ON-VEHICLE CLEANING

INSPECT FINS FOR BLOCKAGE

If fins are clogged, wash them with water or a steam cleaner and dry with compressed air.

NOTICE:

- **If the distance between the steam cleaner and the core is too close, there is a possibility of damaging the fin, so keep the following injection distance.**

Injection Pressure	Injection Distance
2,942 - 4,903 kpa (30 - 50 kg/cm^2, 427 -711 psi)	300 mm (11.811 in)
4,903 - 7,845 kpa (50 - 80 kg/cm^2, 711 - 1,138 psi)	500 mm (19.685 in)

- **If the fins are bent, straighten them with a screwdriver or pliers.**
- **Never apply water directly onto the electronic components.**

CO04O-05

ON-VEHICLE INSPECTION

1. REMOVE RADIATOR CAP

CAUTION:

To avoid the danger of being burned, do not remove the radiator cap while the engine and radiator are still hot, as fluid and steam can be blown out under pressure.

2. INSPECT RADIATOR CAP

NOTICE:

- **If the radiator cap has contaminations, always rinse it with water.**
- **Before using a radiator cap tester, wet the relief valve and pressure valve with engine coolant or water.**
- **When performing steps (a) and (b) below, keep the radiator cap tester at an angle of over 30° above the horizontal.**

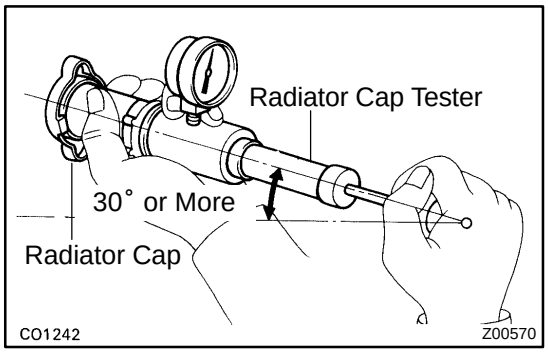

(a) Using a radiator cap tester, slowly pump the tester and check that air is coming from the vacuum valve.

Pump speed: 1 push/(3 seconds or more)

NOTICE:

Push the pump at a constant speed.

If air is not coming from the vacuum valve, replace the radiator cap.

(b) Pump the tester and measure the relief valve opening pressure.

Pump speed: 1 push within 1 seconds

NOTICE:

This pump speed is for the first pump only (in order to close the vacuum valve). After this, the pump speed can be reduced.

Standard opening pressure:

93 - 123 kPa (0.95 - 1.25 kgf/cm^2, 13.5 - 17.8 psi)

Minimum opening pressure:

78 kPa (0.8 kgf/cm^2, 11.3 psi)

HINT:

Use the tester's maximum reading as the opening pressure.

If the opening pressure is less than minimum, replace the radiator cap.

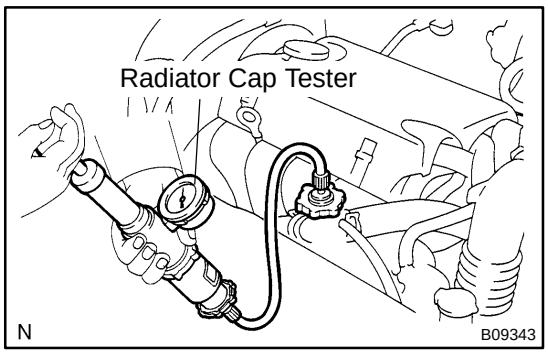

3. INSPECT COOLING SYSTEM FOR LEAKS

(a) Fill the radiator with coolant and attach a radiator cap tester.

(b) Warm up the engine.

(c) Pump it to 137 kPa (1.4 kgf/cm^2, 19.9 psi), and check that the pressure does not drop.

If the pressure drops, check the hoses, radiator or water pump for leaks. If no external leaks are found, check the heater core, cylinder block and head.

4. REINSTALL RADIATOR CAP

CO0XF-01

REASSEMBLY

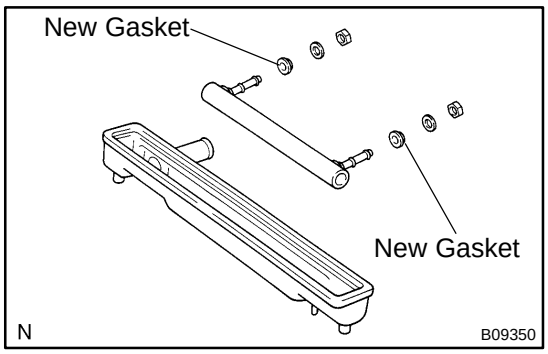

1. A/T:

INSTALL OIL COOLER TO LOWER TANK

(a) Install 2 new O-rings to the oil cooler.

(b) Install the oil cooler to the lower tank.

(c) Install the 2 plate washers and 2 nuts.

Torque: 8.34 N·m (85 kgf·cm, 74 in.·lbf)

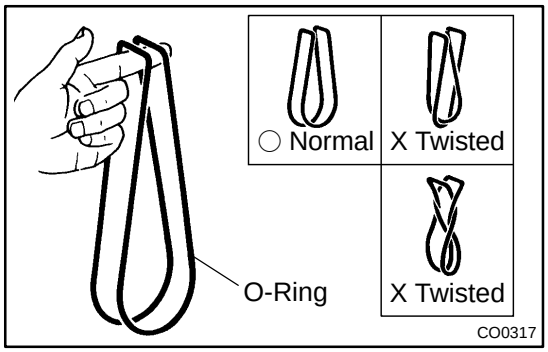

2. INSTALL NEW O-RINGS AND TANKS

(a) After checking that there are no foreign objects in the lock plate groove, install the new O-ring without twisting it.

HINT:

When cleaning the lock plate groove, lightly rub it with sand paper without scratching it.

(b) Install the tank without damaging the O-ring.

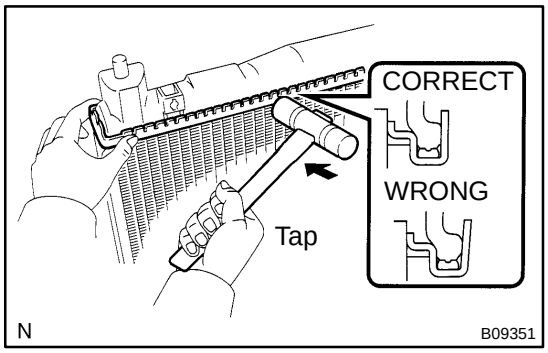

(c) Tap the lock prate with a soft-faced hammer so that there is no gap between it and the tank.

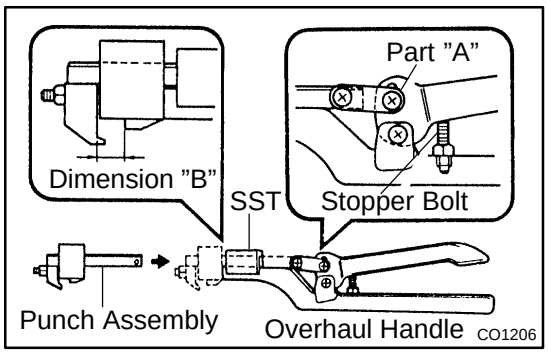

3. ASSEMBLE SST

SST 09230-01010, 09231-14010

(a) Install the punch assembly to the overhaul handle, inserting it in the hole in part ”A” as shown in the illustration.

(b) While gripping the handle, adjust the stopper bolt so that dimension ”B” is as shown in the illustration.

Dimension: 8.4 mm (0.331 in.)

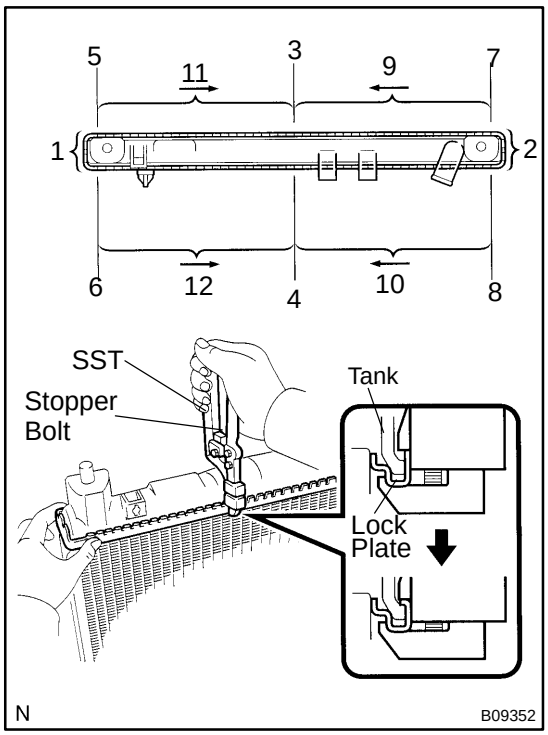

4. CAULK LOCK PLATE

(a) Lightly press SST against the lock plate in the order shown in the illustration. After repeating this a few times, stopped by the stopped plate.
SST 09230-01010

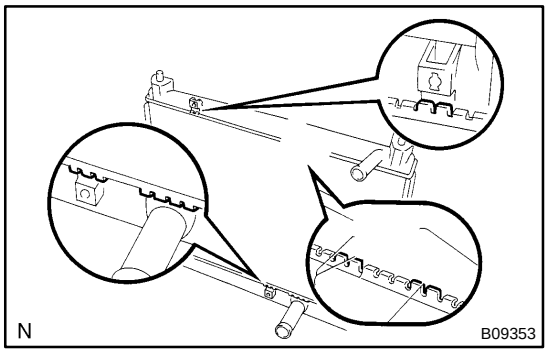

HINT:

- Do not stake the areas protruding around the pipes, brackets or tank rids.

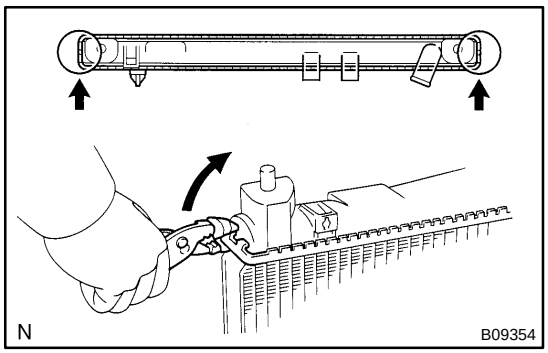

- The points shown in the illustration cannot be staked with SST. Use wrap vinyl tape around the tip of a pair or similar object and be careful not to damage the core plates.

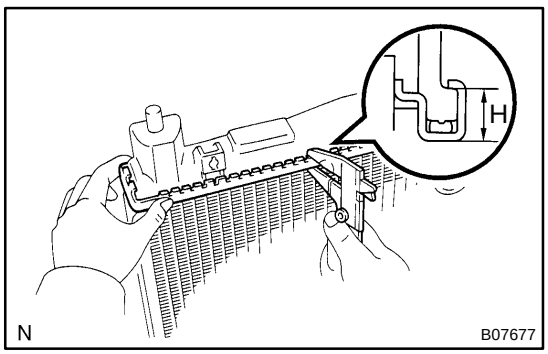

(b) Check the lock plate height (H) after completing the caulking.
Plate height: 7.40 - 7.80 mm (0.2913 - 0.3071 in.)

If not within the specified height, adjust the stopper bolt of the handle again and caulk again.

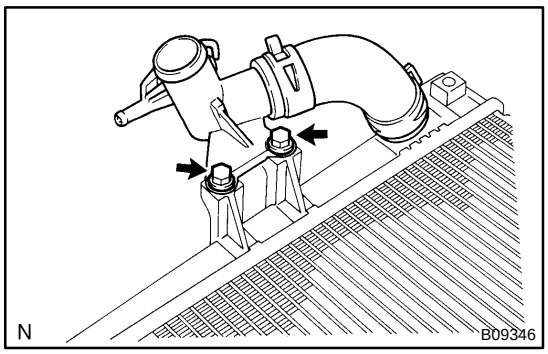

5. INSTALL WATER FILER

(a) Install the water filer with the 2 bolts.
Torque: 7.5 N·m (76 kgf·cm, 66 in.·lbf)

(b) Connect the No. 3 radiator hose to the radiator.

6. INSTALL DRAIN PLUG

(a) Install a new O-ring to the drain plug.

(b) Install the drain plug.

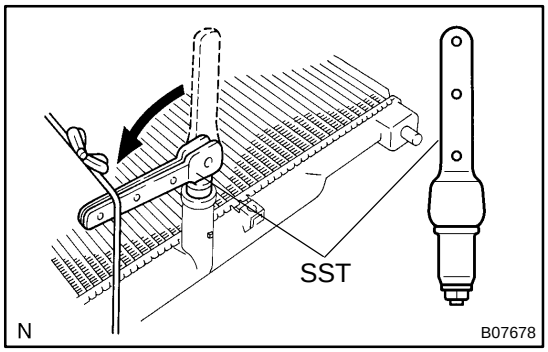

7. INSPECT FOR WATER LEAKS

(a) Tighten the drain plug.

(b) Plug the inlet and outlet pipes of the radiator with SST.
SST 09230-01010

(c) Using a radiator cap tester, apply pressure to the radiator.
Test pressure: 177 kPa (1.8 kgf/cm^2, 26 psi)

(d) Submerge the radiator in water.

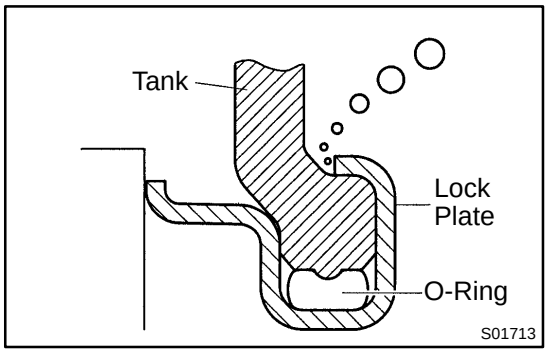

(e) Inspect for leaks.

HINT:

On radiator with resin tank, there is a clearance between the tank and lock plate where a minute amount of air will remain, giving the appearance of an air leak when the radiator is submerged in water. Therefore, before doing the water leak test, first swish the radiator around in the water until all bubbles disappear.

CO04Q-04

REMOVAL

1. DRAIN ENGINE COOLANT

2. REMOVE ENGINE UNDER COVERS

3. REMOVE RADIATOR ASSEMBLY

(a) Disconnect the electric cooling fan connector.

(b) Disconnect the horn connector.

(c) Disconnect the upper radiator hose.

(d) Disconnect the lower radiator hose.

(e) Disconnect the radiator reservoir hose.

(f) A/T:
Disconnect the 2 oil cooler hoses.

(g) Remove the 2 clips and radiator cover.

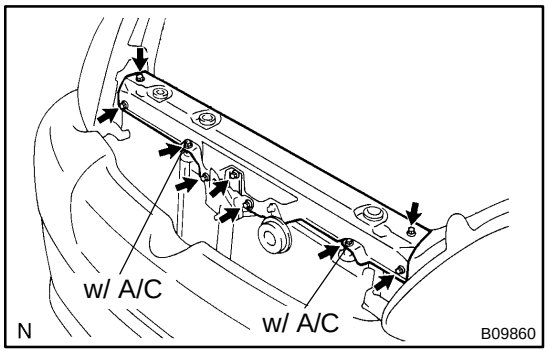

(h) Remove the 7 (w/o A/C) or 9 (w/ A/C) bolts and upper radiator supports.

(i) Remove the radiator assembly.

(j) Remove the 2 radiator support cushions and grommets.

4. REMOVE ELECTRIC COOLING FAN FROM RADIATOR

Remove the 3 bolts and cooling fan assembly.

THERMOSTAT

COMPONENTS

CO04J-06

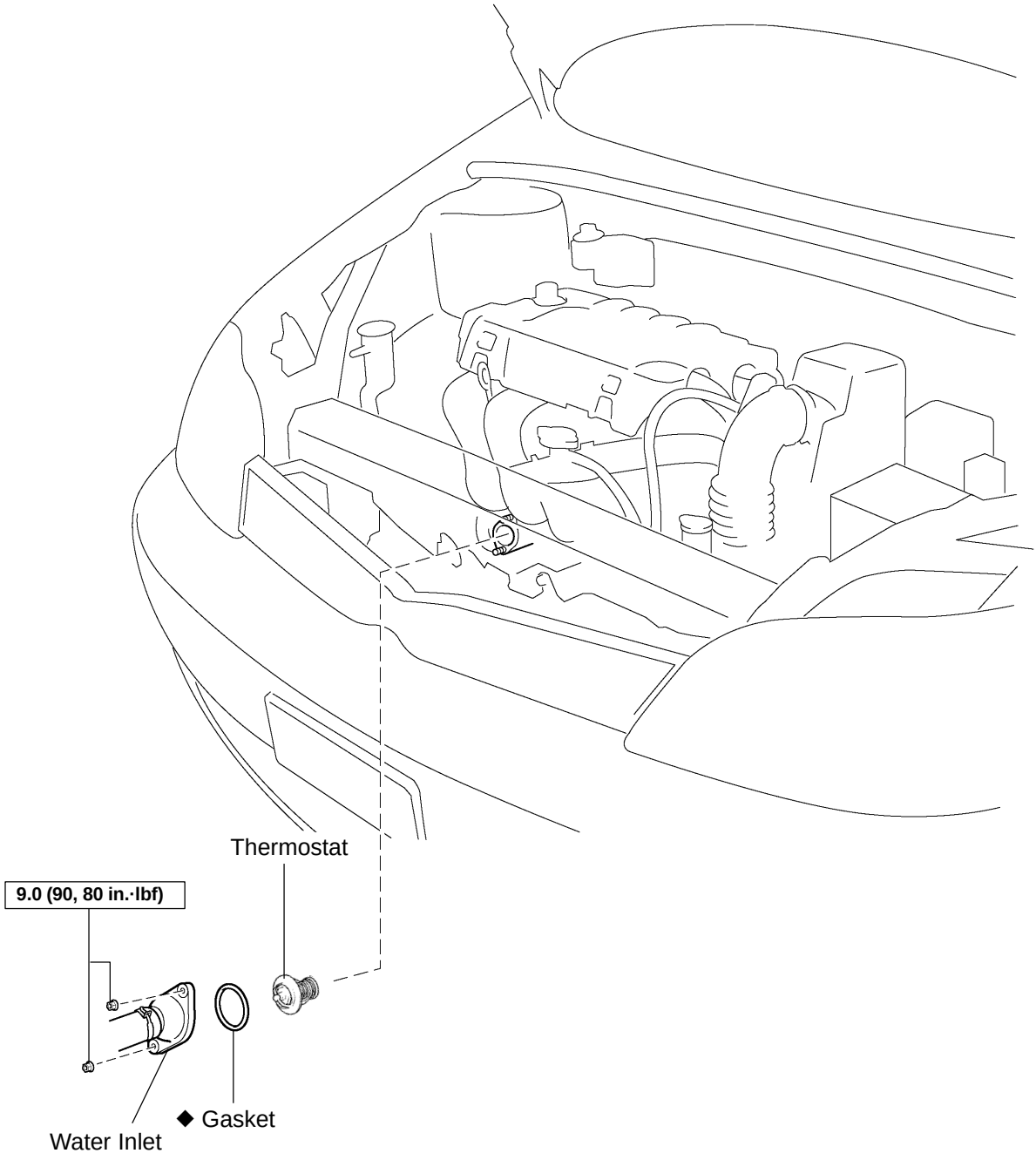

N·m (kgf·cm, ft·lbf) : Specified torque
◆ Non-reusable part

N

B09341

CO04L-05

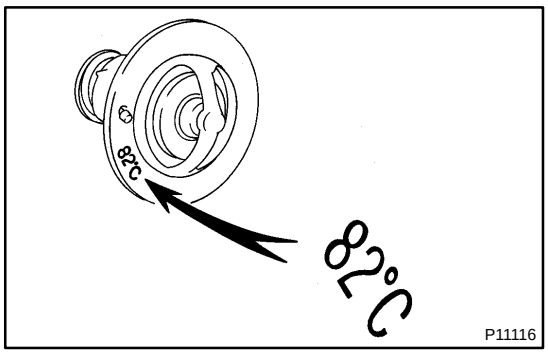

INSPECTION

INSPECT THERMOSTAT

HINT:

The thermostat is numbered with the valve opening temperature.

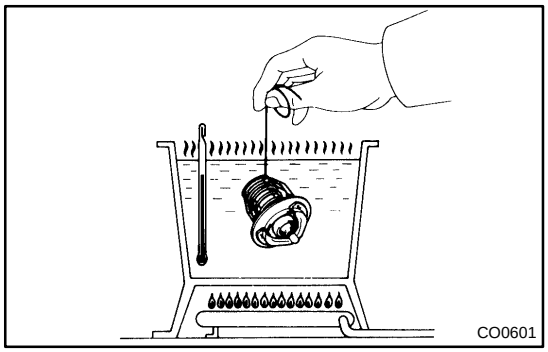

(a) Immerse the thermostat in water and gradually heat the water.

(b) Check the valve opening temperature.

Valve opening temperature:

80 – 84˚C (176 - 183˚F)

If the valve opening temperature is not as specified, replace the thermostat.

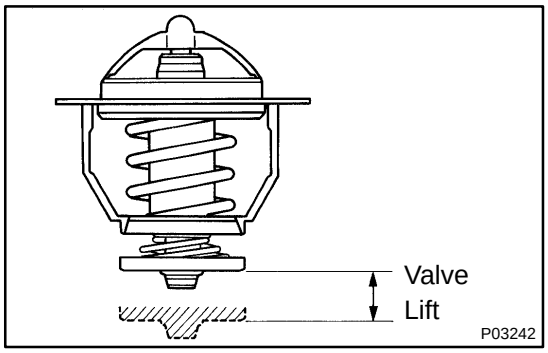

(c) Check the valve lift.

Valve lift: 8.5 mm (0.345 in.) or more at 93˚C (199˚F)

If the valve lift is not as specified, replace the thermostat.

(d) Check that the valve is fully closed when the thermostat is at low temperatures (below 40˚C (104˚F)).

If not closed, replace the thermostat.

CO04M-06

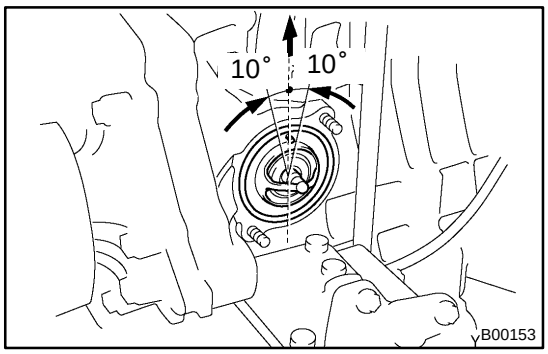

INSTALLATION

1. PLACE THERMOSTAT IN CYLINDER BLOCK

(a) Install a new gasket to the thermostat.

(b) Install the thermostat with the jiggle valve upward.

HINT:

The jiggle valve may be set within 10° at either side of the prescribed position.

2. INSTALL WATER INLET

(a) Install the water inlet with the 2 nuts.

(b) Install the wire harness to the water inlet.

Torque: 9.0 N·m (90 kgf·cm, 80 in.·lbf)

3. FILL WITH ENGINE COOLANT

4. START ENGINE, AND CHECK FOR COOLANT LEAKS.

CO04K-06

REMOVAL

HINT:

Removal of the thermostat would have an adverse effect, causing a lowering of cooling efficiency. Do not remove the thermostat, even if the engine tends to overheat.

1. DRAIN ENGINE COOLANT

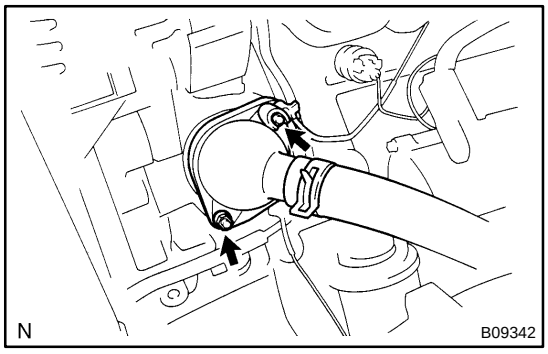

2. REMOVE WATER INLET AND THERMOSTAT

(a) Disconnect the wire harness clamp from the water inlet.

(b) Remove the 2 nuts, and disconnect the water inlet from the cylinder block.

(c) Remove the thermostat.

(d) Remove the gasket from the thermostat.

WATER PUMP

COMPONENTS

CO04F-05

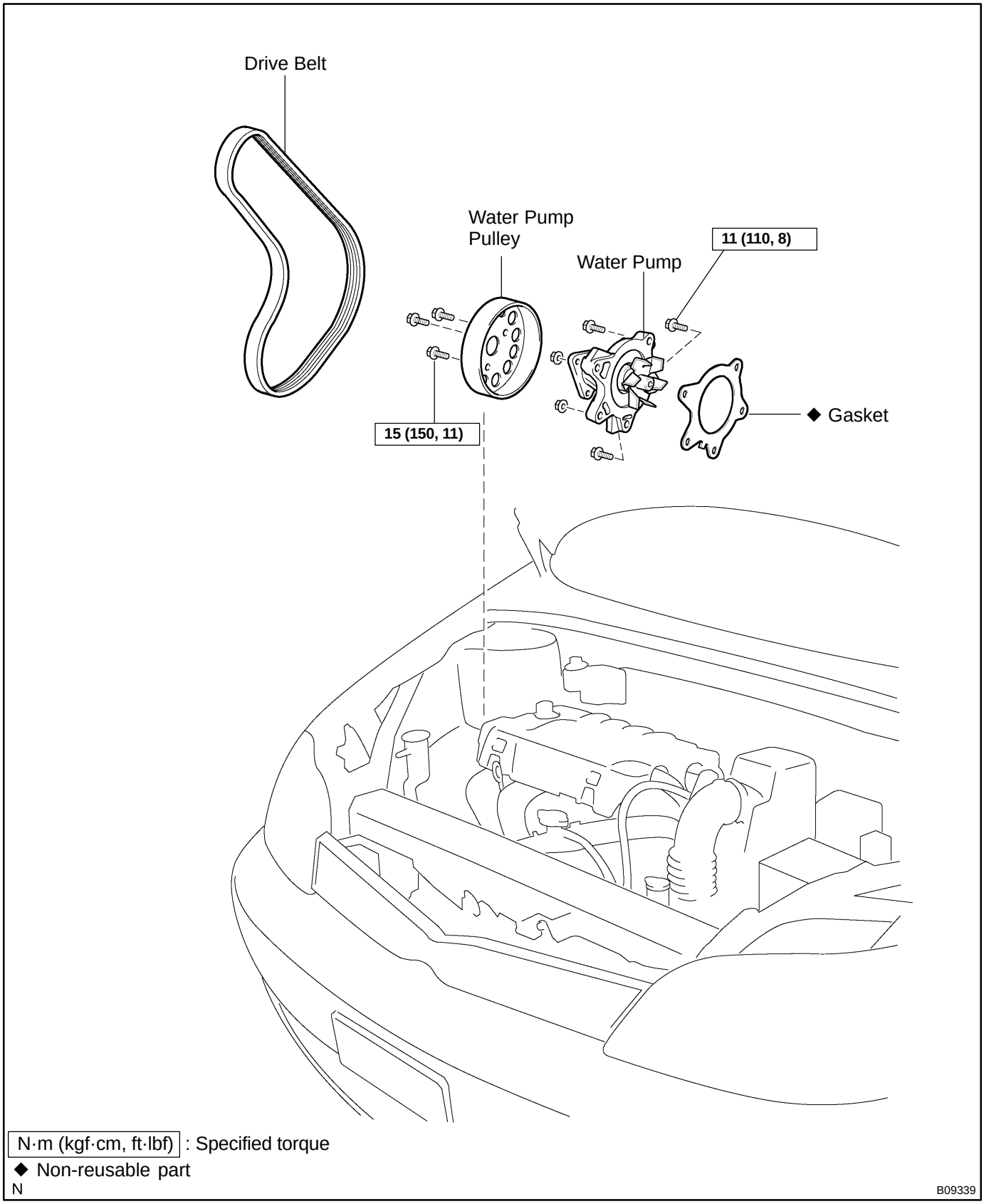

N·m (kgf·cm, ft·lbf) : Specified torque
◆ Non-reusable part
N

B09339

CO04H-05

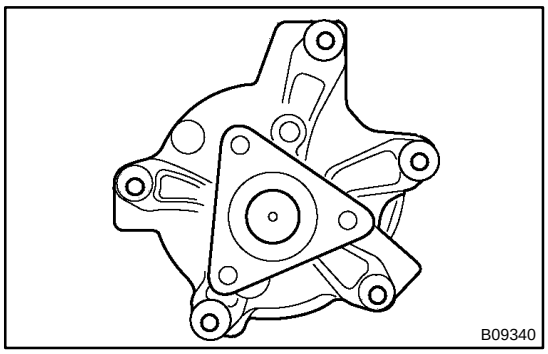

INSPECTION

INSPECT WATER PUMP

(a) Visually check the drain hole for coolant leakage.

If leakage is found, replace the water pump.

(b) Turn the pulley, and check that the water pump bearing moves smoothly and quietly.

If necessary, replace the water pump.

CO0V2-02

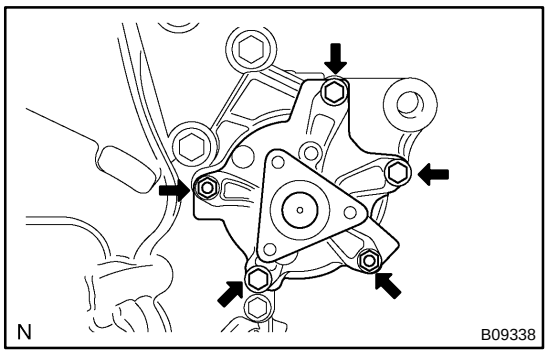

INSTALLATION

1. INSTALL WATER PUMP

(a) Install the water pump and a new gasket with the 3 bolts and 2 nuts.

Torque: 11.0 N·m (110 kgf·cm, 8 ft·lbf)

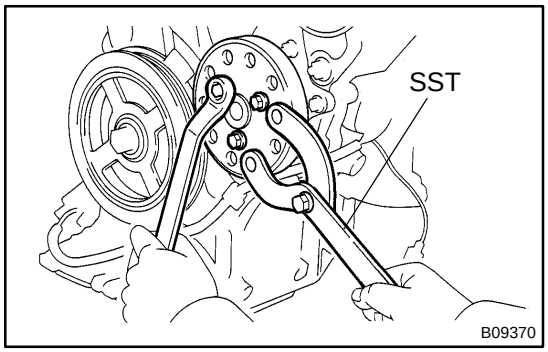

(b) Using SST, install the pump pulley with the 3 bolts.
SST 09960-10010 (09962-01000, 09963-00600)

Torque: 15 N·m (150 kgf·cm, 11 ft·lbf)

2. INSTALL DRIVE BELT (See page CH-2)

3. FILL WITH ENGINE COOLANT

4. START ENGINE AND CHECK FOR LEAKS

5. RECHECK ENGINE COOLANT LEVEL

CO0V1-02

REMOVAL

1. DRAIN ENGINE COOLANT

2. REMOVE DRIVE BELT (See page CH-2)

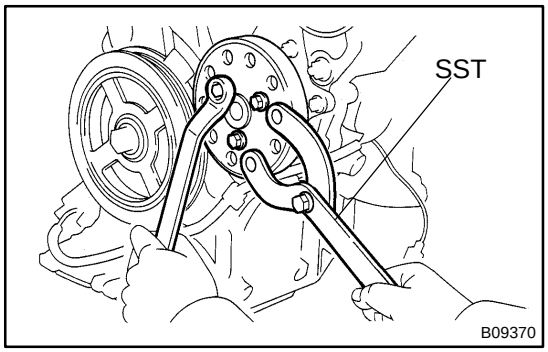

3. REMOVE WATER PUMP

(a) Using SST, remove the 3 bolts and pump pulley.
SST 09960-10010 (09962-01000, 09963-00600)

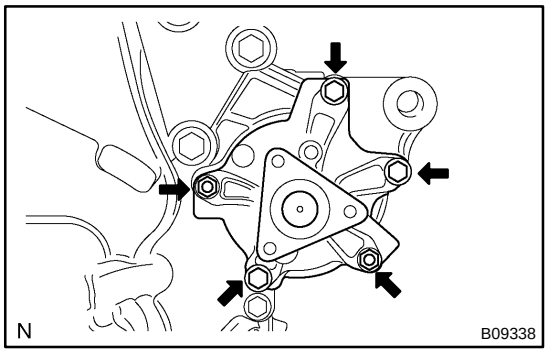

(b) Remove the 3 bolts, 2 nuts, water pump and gasket.

DI6ST-04

ABS Warning Light Circuit

CIRCUIT DESCRIPTION

If the ECU detects trouble, it lights the ABS warning light while at the same time prohibiting ABS control. At this time, the ECU records a DTC in memory.
Connect terminals Tc and CG of the DLC3 make the ABS warning light blink and output the DTC.

WIRING DIAGRAM

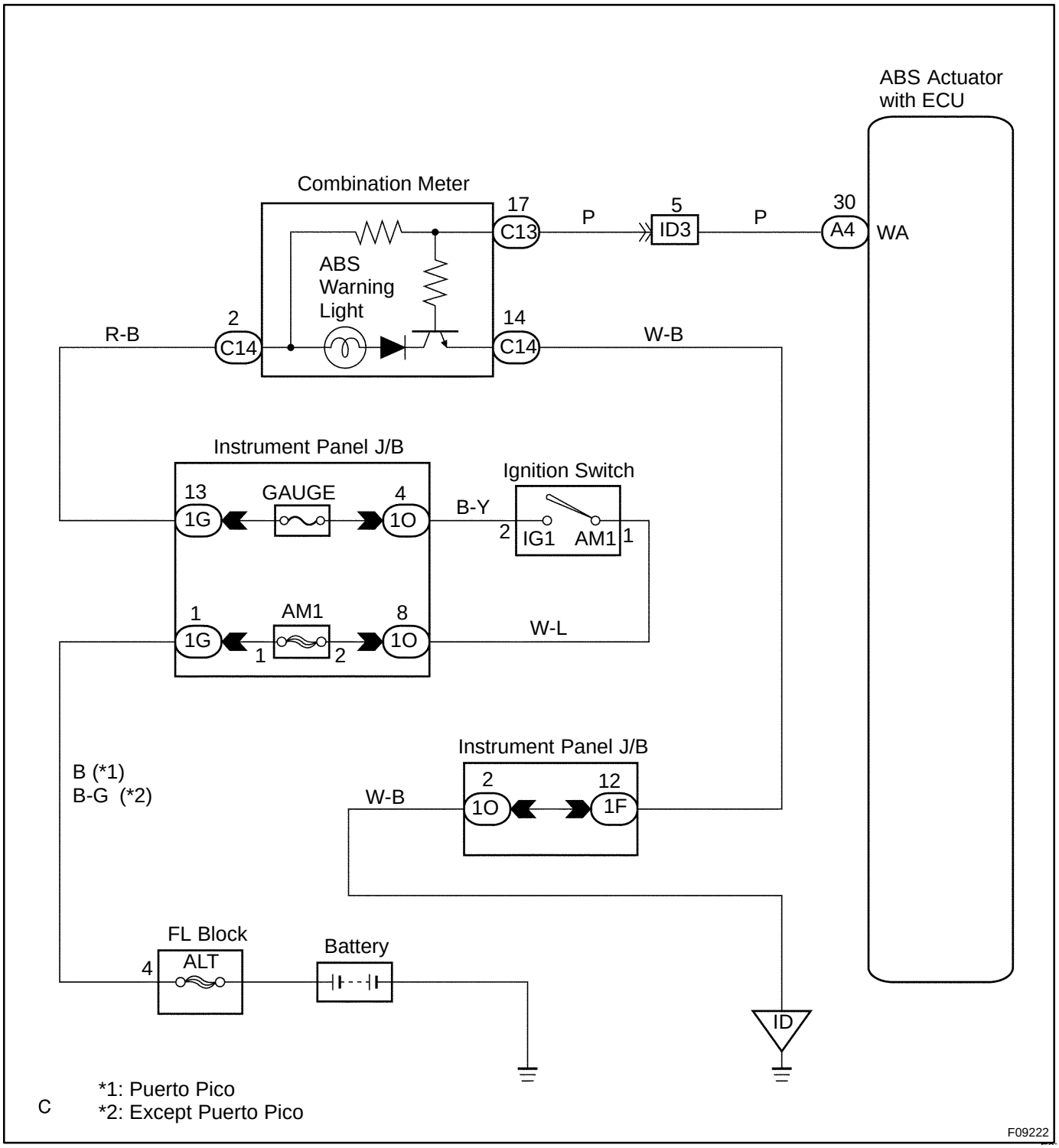

INSPECTION PROCEDURE

Troubleshoot in accordance with the table below for each trouble symptom.

ABS warning light does not light up	*1
ABS warning light remains on	*2

*1: Start the inspection from step 1 in case of using the TOYOTA hand-held tester and start from step 2 in case of not using TOYOTA hand-held tester.

*2: After inspection with step 3, start the inspection from step 4 in case of using the TOYOTA hand-held tester and start from step 5 in case of not using TOYOTA hand-held tester.

1	**Check operation of the ABS warning light.**

PREPARATION:

(a) Connect the TOYOTA hand-held tester to the DLC3.
(b) Turn the ignition switch ON and push the TOYOTA hand-held tester main switch ON.
(c) Select the ACTIVE TEST mode on the TOYOTA hand-held tester.

CHECK:

Check that ”ON” and ”OFF” of the ABS warning light can be shown on the combination meter by the TOYOTA hand-held tester.

OK → **Check and replace ABS actuator assembly.**

NG

2	**Check ABS warning light.**

See combination meter troubleshooting on page BE-2 .

NG → **Replace bulb or combination meter assembly.**

OK

Check for open circuit in harness and connector between GAUGE fuse and ABS warning light. (See page IN-29).

3	**Check that the ECU connectors are securely connected to the ECU.**

NO → **Connect the connector to the ECU.**

YES

4	**Check operation of the ABS warning light (See step 1).**

OK → **Check and replace ABS actuator assembly.**

NG

5	**Is DTC output?**

Check DTC on page DI-201 .

YES → **Repair circuit indicated by the code output.**

NO

Check for short circuit in harness and connector between ABS warning light, DLC3 and ABS ECU (See page IN-29).

DI6SS-02

DTC	Always ON	ABS ECU Malfunction

CIRCUIT DESCRIPTION

DTC No.	DTC Detecting Condition	Trouble Area
Always ON	Detection of any conditions in 1. and 2.: 1. ABS ECU internal malfunction is detected. 2. There is a malfunction in the ECU internal circuit	• Battery • Charging system • Power source circuit • ABS ECU • ABS warning light circuit

INSPECTION PROCEDURE

1	**Check that the ABS ECU connectors are securely connected to the ABS ECU.**

NO → **Connect the connector to the ABS ECU.**

YES

2	**Is DTC output?**

Check DTC on page DI-201 .

YES → **Repair circuit indicated by the code output.**

NO

3	**Check voltage between terminals IG1 (3) and GND (1, 23) of ABS ECU connector.**

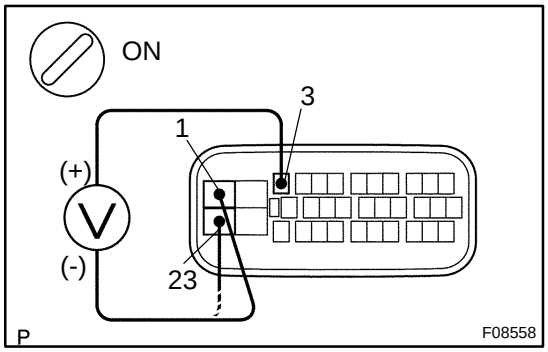

PREPARATION:
Disconnect ABS ECU connector.
CHECK:
(a) Turn the ignition switch ON.
(b) Measure voltage between terminals 3 and 1, 23 of ABS ECU harness side connector.
OK:
Voltage: 10 - 14 V

NG → **Check for open and short circuit in harness and connector between ECU-IG fuse and ABS ECU (See page IN-29).**

OK

4	**Check ABS warning light.**

In case of using the TOYOTA hand-held tester:

PREPARATION:

(a) Connect the TOYOTA hand-held tester to the DLC3.
(b) Turn the ignition switch ON and push the TOYOTA hand-held tester main switch ON.
(c) Select the ACTIVE TEST mode on the TOYOTA hand-held tester.

CHECK:

Check that "ON" and "OFF" of the ABS warning light can be shown on the combination meter by the TOYOTA hand-held tester.

In case of not using the TOYOTA hand-held tester:

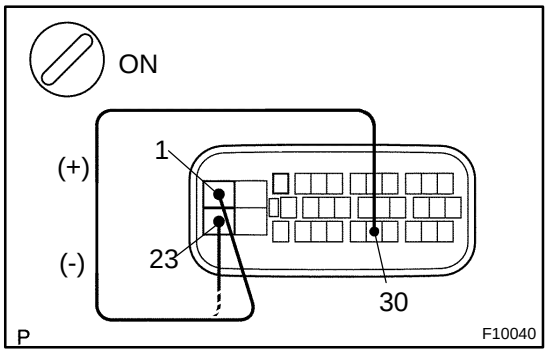

PREPARATION:

Disconnect ABS ECU connector.

CHECK:

(a) Using service wire, connect terminal WA (30) and GND (1, 23) of ABS ECU harness side connector.
(b) Turn the ignition switch ON.

OK:

ABS warning light go off

OK	**Check and replace ABS actuator assembly.**

NG

Check for open or short circuit in harness and connector between ABS warning light, DLC3 and ABS ECU (See page IN-29).

DI6SP-04

DTC	C1241 / 41	IG Power Source Circuit

CIRCUIT DESCRIPTION

This is the power source for the ECU, hence for the CPU, and ABS actuator.

DTC No.	DTC Detecting Condition	Trouble Area
C1241 / 41	Detection of any of conditions from 1. through 3. 1. With vehicle speed at 3 km/h or more, IG1 or +BS terminal voltage is 8.5 V or below for 10 sec. or longer. 2. With IG1 terminal voltage at 8.5 V or below, ABS solenoid relay open, ABS motor relay open, solenoid fault detecting condition are established. 3. +BS terminal voltage is 19 V or above for 1 sec. or longer	• Battery • Charging system • Power source circuit

WIRING DIAGRAM

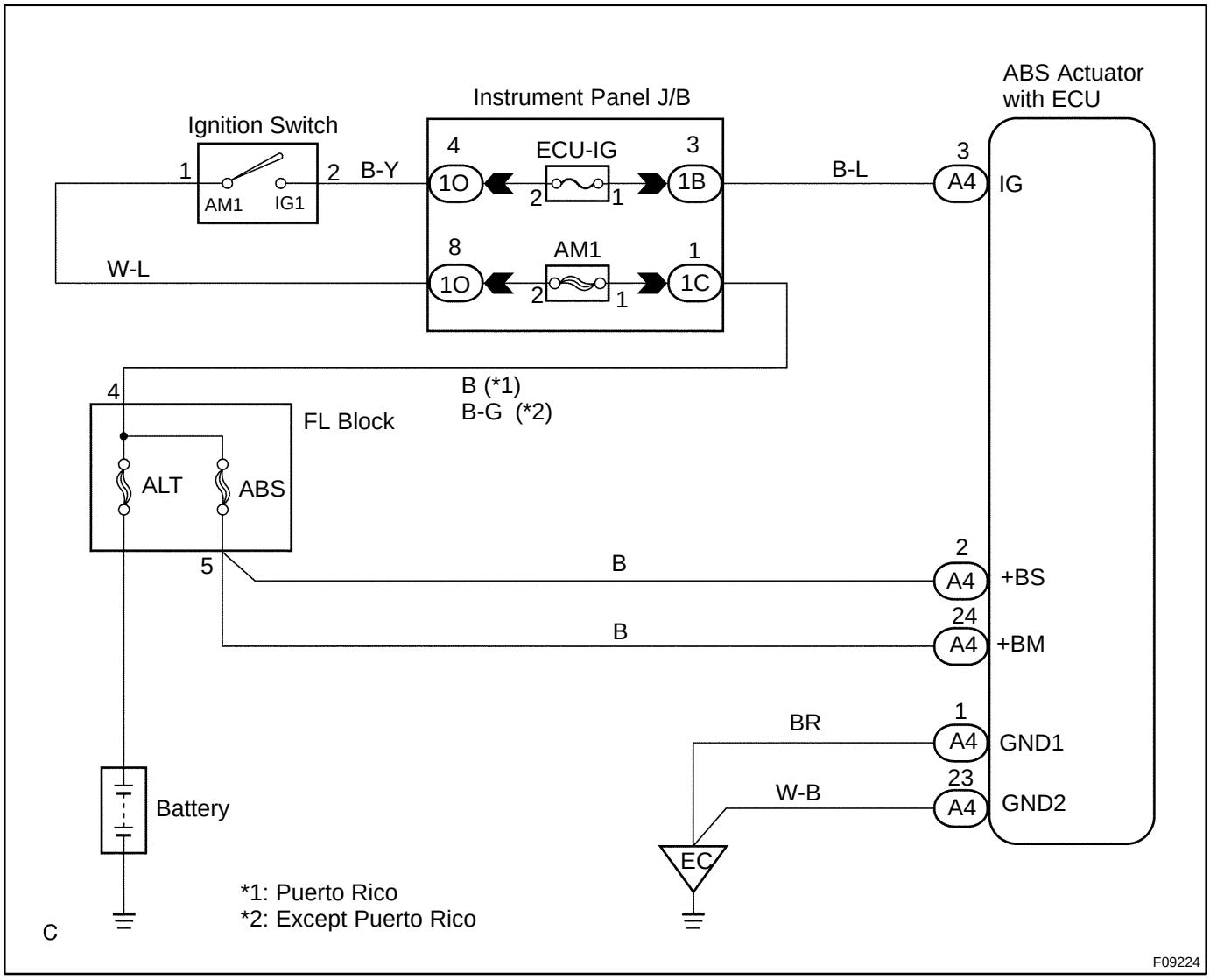

INSPECTION PROCEDURE

1	**Check ECU-IG fuse.**

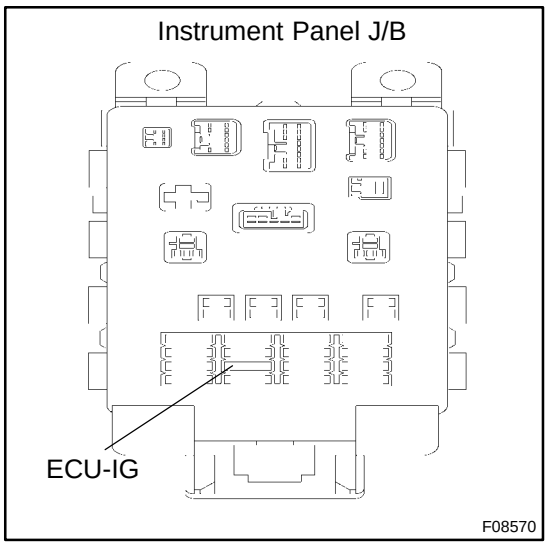

PREPARATION:
Remove ECU-IG fuse from Instrument Panel J/B.
CHECK:
Check continuity of ECU-IG fuse.
OK:
Continuity

NG → **Check for short circuit in all the harness and components connected to ECU-IG fuse (See attached wiring diagram).**

OK

2	**Check battery positive voltage.**

OK:
Voltage: 10 - 14 V

NG → **Check and repair the charging system (See page IN-29).**

OK

3	**Check voltage of the ECU IG power source.**

In case of using the TOYOTA hand-held tester:
PREPARATION:
(a) Connect the TOYOTA hand-held tester to the DLC3.
(b) Turn the ignition switch ON and push the TOYOTA hand-held tester main switch ON.
(c) Select the DATALIST mode on the TOYOTA hand-held tester.
CHECK:
Check the voltage condition output from the ECU displayed on the TOYOTA hand-held tester.
OK:
"Normal" is displayed.

In case of not using the TOYOTA hand-held tester:

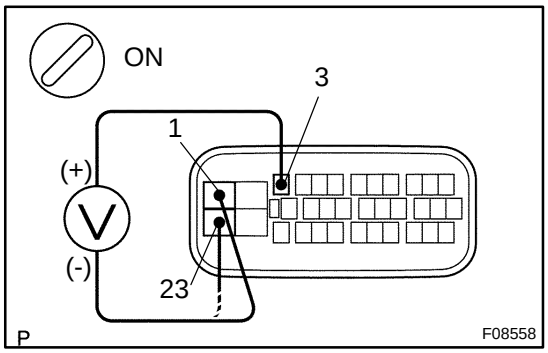

PREPARATION:

Disconnect ABS ECU connector.

CHECK:

(a) Turn the ignition switch ON.

(b) Measure voltage between terminals 3 and 1, 23 of ABS ECU harness side connector.

OK:

Voltage: 10 - 14 V

OK	**Check or replace ABS actuator assembly.**

NG

4	**Check continuity between terminals GND (1, 23) of ABS ECU connector and body ground.**

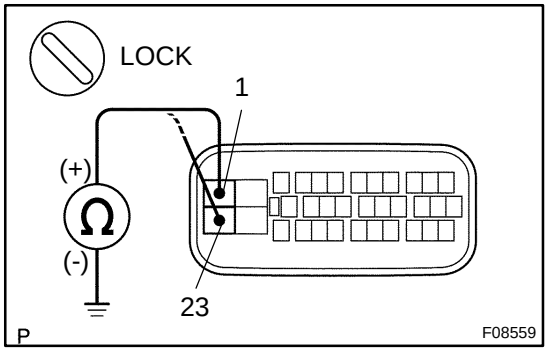

CHECK:

Measure resistance between terminals 1 and 23 of ABS ECU harness side connector and body ground.

OK:

Resistance: 1 Ω or less

NG	**Repair or replace harness or connector.**

OK

Check for open circuit in harness and connector between ABS ECU and ECU-IG fuse (See page IN-29).

DI6SQ-02

DTC	C1249 / 49	Stop Light Switch Circuit

CIRCUIT DESCRIPTION

DTC No.	DTC Detecting Condition	Trouble Area
C1249 / 49	With IG1 terminal voltage at 8.5 V - 19 V, and when ABS is in non-operation stop light switch circuit is open for 0.3 sec. or longer.	• Stop light valve • Stop light switch • Stop light switch circuit

WIRING DIAGRAM

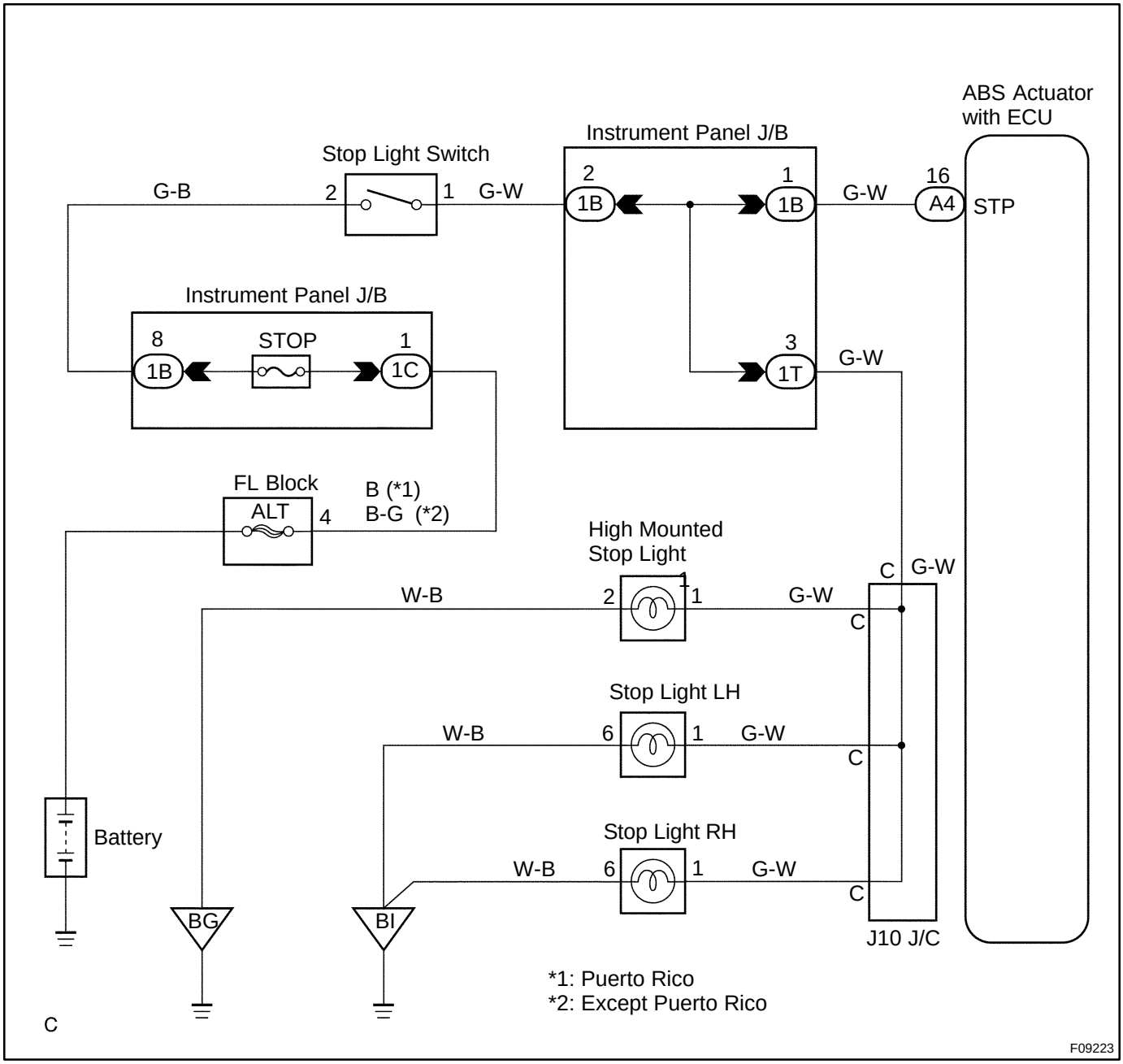

INSPECTION PROCEDURE

1	**Check operation of stop light.**

CHECK:
Check that stop light lights up when brake pedal is depressed and turns off when brake pedal is released.

NG → **Repair stop light circuit (See page BE-37).**

OK

2	**Check voltage between terminal STP (16) of ABS ECU and body ground.**

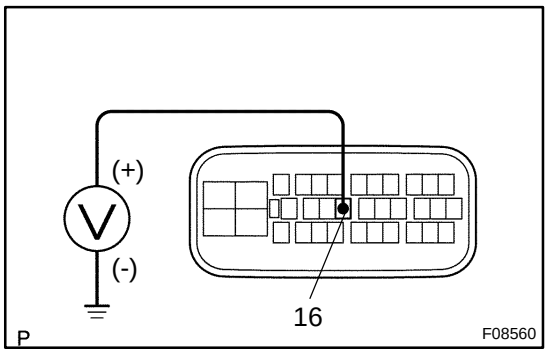

PREPARATION:
Disconnect ABS ECU connector.
CHECK:
Measure the voltage between terminal 16 of ABS ECU harness side connector and body ground when brake pedal is depressed.
OK:
Voltage: 10 - 14 V

OK → **Check and replace ABS actuator assembly.**

NG

3	**Check for open circuit in harness and connector between ABS ECU and stop light switch (See page IN-29).**

NG → **Repair or replace harness or connector.**

OK

Check and replace ABS ECU.

DI6SR-04

DTC	C1251 / 51	ABS Pump Motor Lock

CIRCUIT DESCRIPTION

DTC No.	DTC Detecting Condition	Trouble Area
C1251 / 51	ABS actuator pump motor is not operating normally during initial check.	ABS pump motor

WIRING DIAGRAM

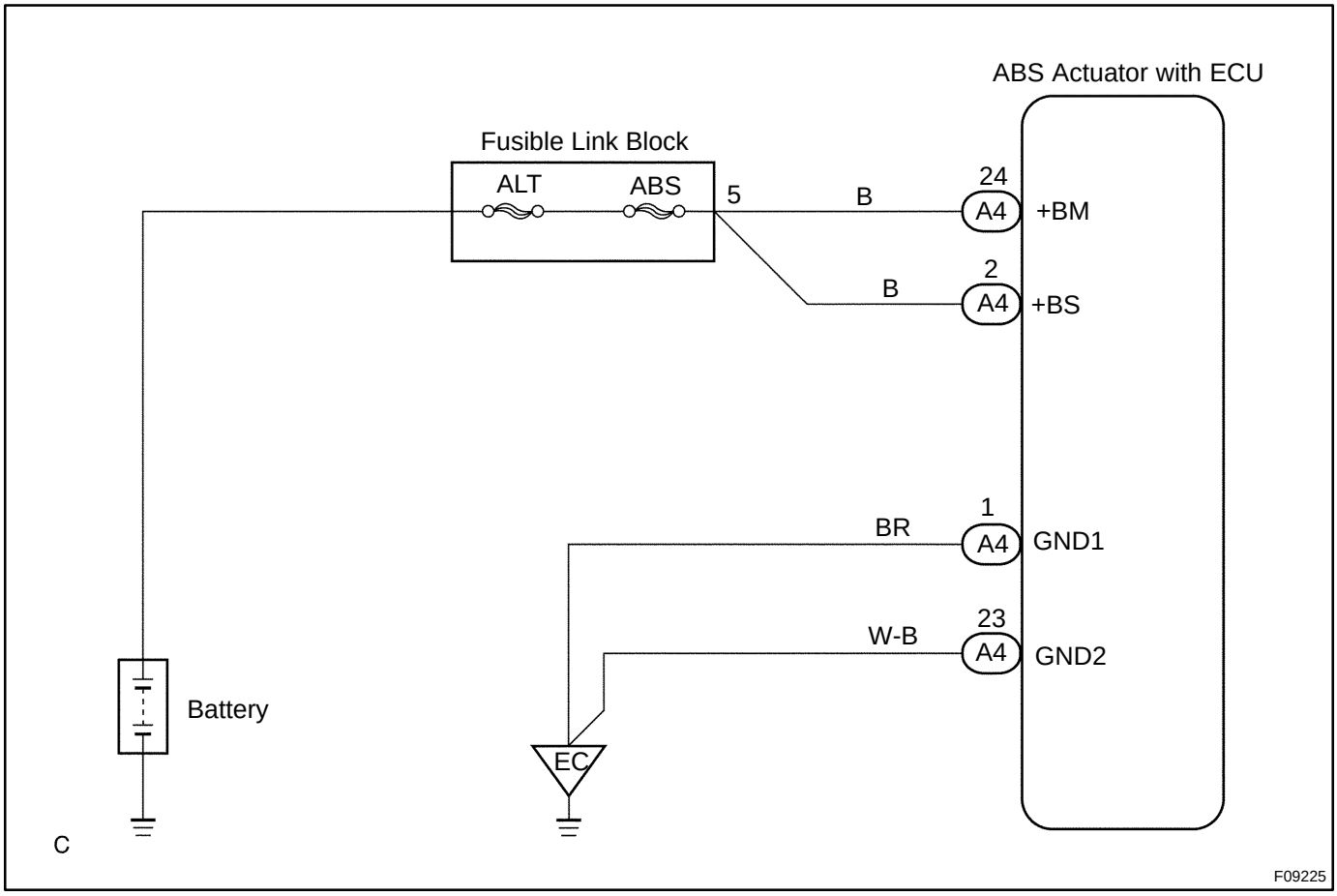

INSPECTION PROCEDURE

1	**Check ABS pump motor operation.**

PREPARATION:

(a) Connect the TOYOTA hand-held tester to the DLC3.
(b) Turn the ignition switch ON and push the TOYOTA hand-held tester main switch ON.
(c) Select the ACTIVE TEST mode on the TOYOTA hand-held tester.

CHECK:

Check the operation sound of the ABS pump motor when operating it with the TOYOTA hand-held tester.

OK:

The operation sound of the ABS pump motor should be heard.

NG → **Check and replace ABS actuator assembly.**

OK

Proceed to next circuit inspection shown in problem symptoms chart (See page DI-208).

DI6SL-02

CIRCUIT INSPECTION

DTC	C0200 / 31 to C0215 / 34	Speed Sensor Circuit

CIRCUIT DESCRIPTION

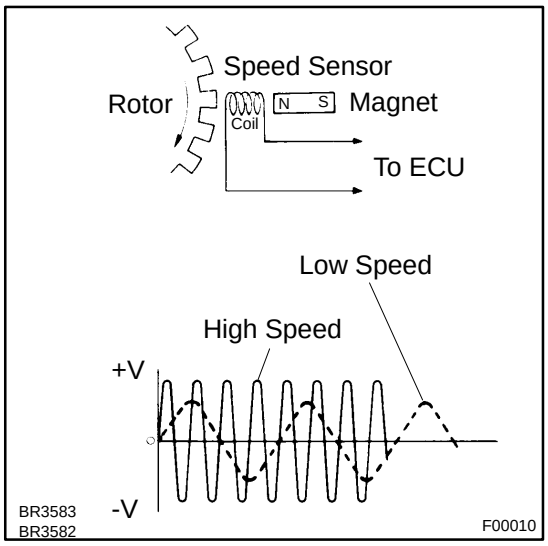

The speed sensor detects wheel speed and sends the appropriate signals to the ECU. These signals are used to control of the ABS system. The front and rear rotors each have 48 serrations.

When the rotors rotate, the magnetic field emitted by the permanent magnet in the speed sensor generates an AC voltage. Since the frequency of this AC voltage changes in direct proportion to the speed of the rotor, the frequency is used by the ECU to detect the speed of each wheel.

DTC No.	DTC Detecting Condition	Trouble Area
C0200 / 31 C0205 / 32 C0210 / 33 C0215 / 34	Detection of any of conditions from 1. through 4.: 1. With vehicle speed at 10 km/h or more, sensor signal circuit of faulty wheel is open or short for 30 sec. or longer. 2. Momentary interruption of sensor signal of faulty wheel has occurred 7 times or more. 3. Sensor signal circuit is open for 0.2 sec. or longer.	• Right front, left front, right rear, left rear speed sensor • Each speed sensor circuit • Sensor installation • Sensor rotor

HINT:

- DTC No. C0200 / 31 is for the right front speed sensor.
- DTC No. C0205 / 32 is for the left front speed sensor.
- DTC No. C0210 / 33 is for the right rear speed sensor.
- DTC No. C0215 / 34 is for the left rear speed sensor.

WIRING DIAGRAM

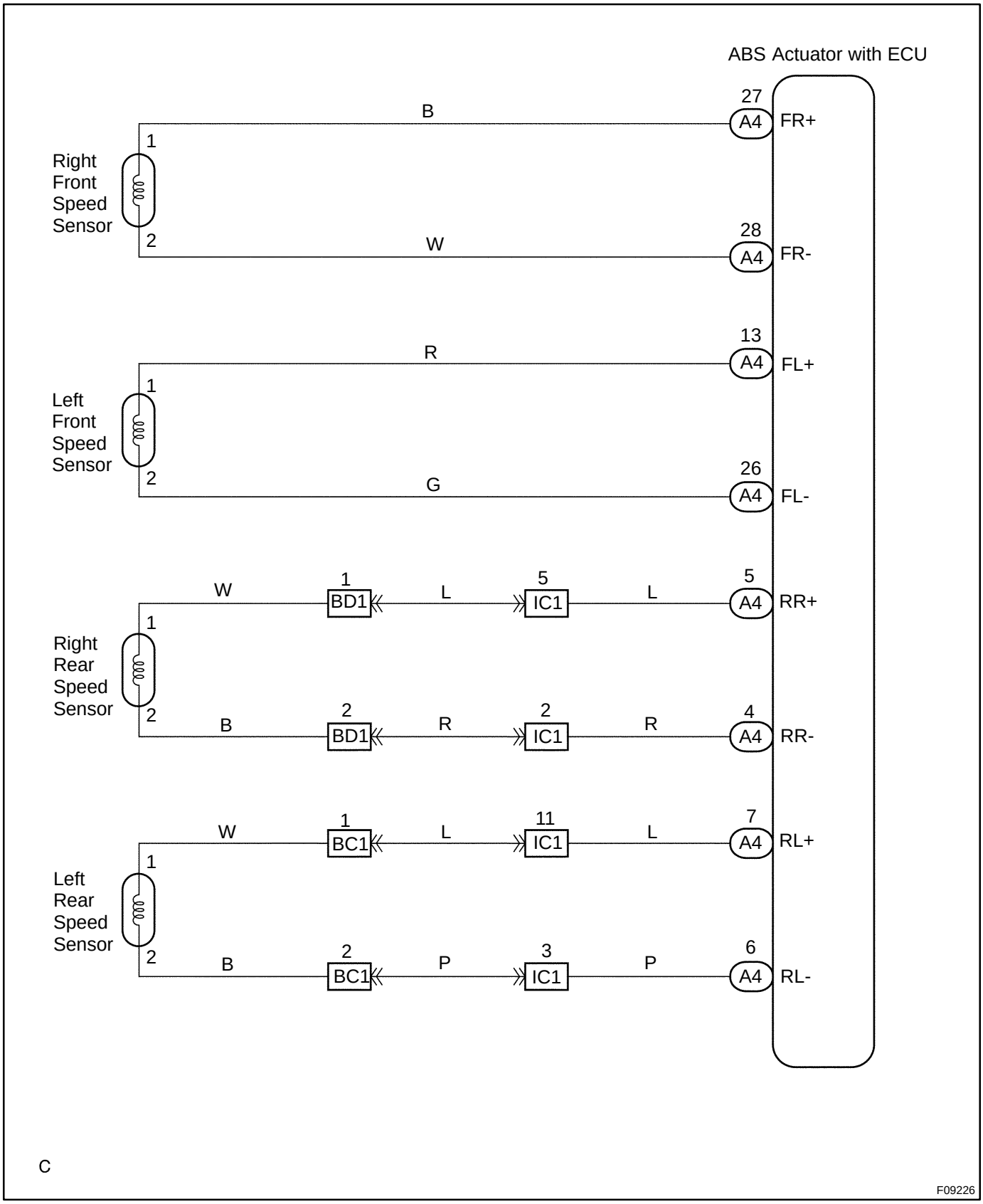

INSPECTION PROCEDURE

HINT:

Start the inspection from step 1 in case of using the TOYOTA hand-held tester and start from step 2 in case of not using the TOYOTA hand-held tester.

1	**Check output value of speed sensor.**

PREPARATION:

(a) Connect the TOYOTA hand-held tester to the DLC3.
(b) Turn the ignition switch ON and push the TOYOTA hand-held tester main switch ON.
(c) Select the DATALIST mode on the TOYOTA hand-held tester.

CHECK:

Check that there is no difference between the speed value output from the speed sensor displayed on the TOYOTA hand-held tester and the speed value displayed on the speedometer when driving the vehicle.

OK:

There is almost no difference from the displayed speed value.

HINT:

There is tolerance of ± 10 % in the speedometer indication.

OK → **Check and replace ABS actuator assembly.**

NG

2	**Check speed sensor.**

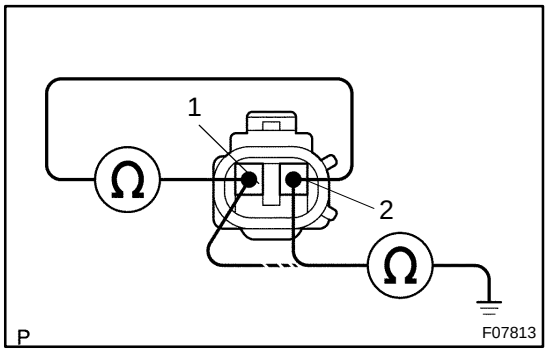

Front:

PREPARATION:

Disconnect the speed sensor connector.

CHECK:

Measure resistance between terminals 1 and 2 of speed sensor connector.

OK:

Resistance: 1.4 - 1.8 kΩ

CHECK:

Measure resistance between each of terminals 1 and 2 of speed sensor connector and body ground.

OK:

Resistance: 1 MΩ or higher

NG → **Replace front speed sensor.**

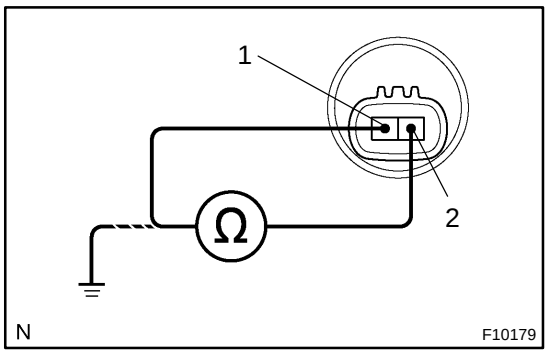

Rear speed sensor:

PREPARATION:

(a) Make sure that there is no looseness at the connector lock part and connecting part of the connector.

(b) Disconnect the speed sensor connector at hub bearing .

CHECK:

Measure resistance between terminals 1 and 2 of speed sensor connector.

OK:

Resistance: 0.9 - 1.3 kΩ at 25 ± 5 ˚C

CHECK:

Measure resistance between terminals 1 and 2 of speed sensor connector at hub bearing and body ground.

OK:

Resistance: 1 MΩ or higher

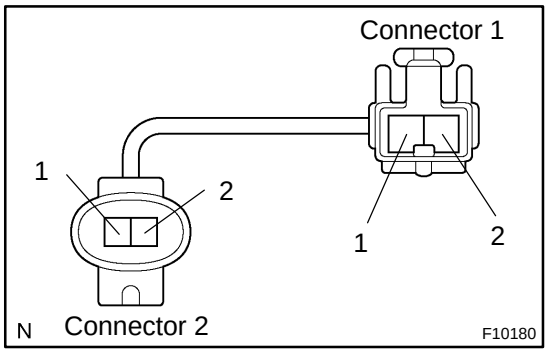

Rear speed sensor sub-wire harness:

PREPARATION:

(a) Remove the seat cushion and seatback.

(b) Make sure that there is no looseness at the connector lock part and connecting part of the connector.

(c) Disconnect the speed sensor connector inside vehicle.

CHECK:

(a) Measure resistance between terminal 1 of connector 1 and terninal 2 of connector 2.

(b) Measure resistance between terminal 2 of connector 1 and terninal 1 of connector 2.

OK:

Resistance: below 1 Ω

CHECK:

Measure resistance between terminals 1 and 2 of speed sensor connector 1 and body ground.

OK:

Resistance: 1 MΩ or higher

NG → **Replace speed sensor or sub-wire harness.**

NOTICE:

Check the speed sensor signal last (See page DI-201).

OK

3	**Check for open and short circuit in harness and connector between each speed sensor and ABS ECU (See page IN-29).**

NG → **Repair or replace harness or connector.**

OK

4	**Check speed sensor installation.**

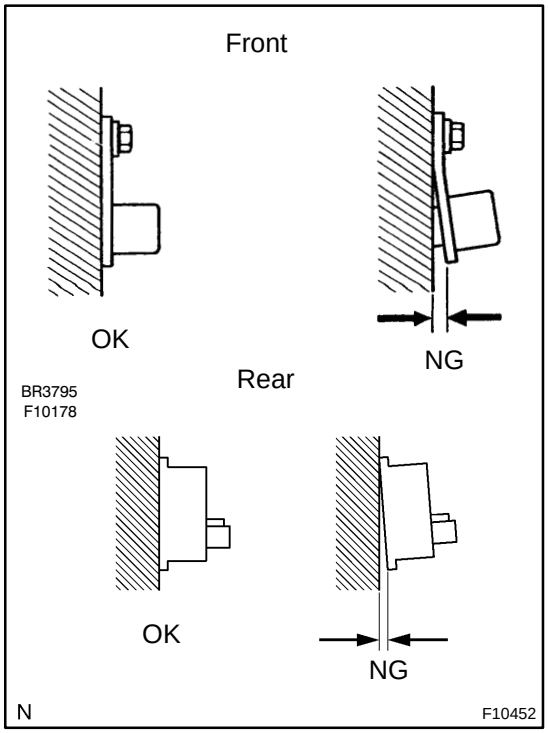

CHECK:
Check the speed sensor installation.
OK:

The installation bolt is tightened properly and there is no clearance between the sensor and steering knuckle or rear axle hub.

NG → **Replace speed sensor.**

NOTICE:
Check the speed sensor signal last (See page DI-201).

OK

5	Check speed sensor and sensor rotor serrations.

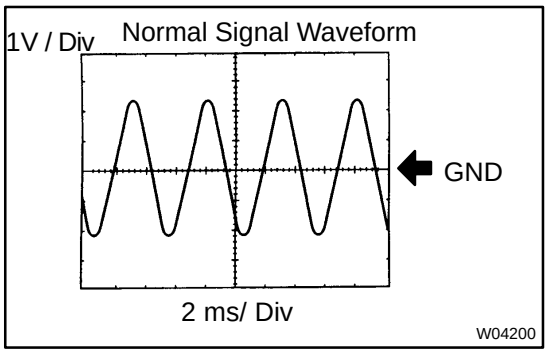

(REFERENCE) INSPECTION USING OSCILLOSCOPE

PREPARATION:

Connect the oscilloscope to the terminals FR+, FL+, RR+, or RL+ and GND of the ABS actuator assembly.

CHECK:

Drive the vehicle at 20 km/h (12 mph), and check the signal waveform.

OK	Check and replace ABS actuator.

NG

6	Check sensor rotor and sensor tip.

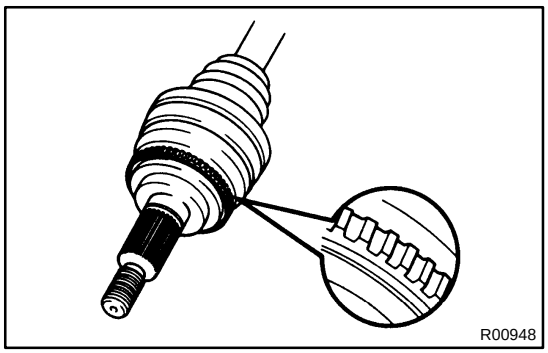

Front:

PREPARATION:

Remove the front drive shaft (See page SA-18).

CHECK:

Check the sensor rotor serrations.

OK:

No scratches, missing teeth or foreign objects.

PREPARATION:

Remove the front speed sensor (See page BR-39).

CHECK:

Check the sensor tip.

OK:

No scratches or foreign objects on the sensor tip.

NG	Replace sensor rotor or speed sensor.

NOTICE:

Check the speed sensor signal last (See page DI-201).

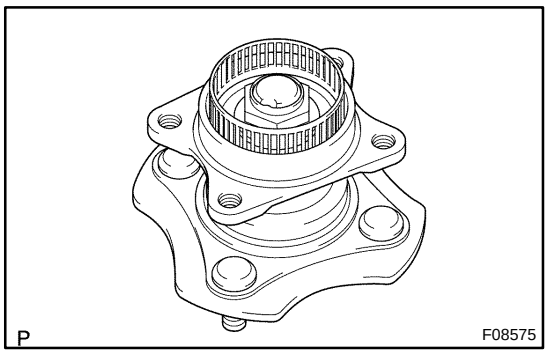

Rear:

PREPARATION:

Remove the axle hub and disconnect the rear speed sensor (See page BR-42).

CHECK:

Check the sensor rotor serrations.

OK:

No scratches or missing teeth or foreign objects.

CHECK:

Check the sensor tip.

OK:

No scratches or foreign objects on the sensor tip.

NG → **Replace sensor rotor or speed sensor.**

NOTICE:

Check the speed sensor signal last (See page DI-201).

OK

Check and replace ABS actuator assembly.

DI6SM-04

DTC	C0226 / 21 to C0256 / 24	ABS Solenoid Valve Circuit

CIRCUIT DESCRIPTION

This solenoid goes on when signals are received from the ECU and controls the pressure acting on the wheel cylinders thus controlling the braking force.

DTC No.	DTC Detecting Condition	Trouble Area
C0226 / 21 C0236 / 22 C0246 / 23 C0256 / 24	With IG1 terminal voltage at 8.5 V - 19 V, solenoid circuit is open or short for 0.05 sec. or longer.	• Each solenoid valves circuit • ABS actuator

HINT:

- DTC No. C0226 / 21 is for right front solenoid valve.
- DTC No. C0236 / 22 is for left front solenoid valve.
- DTC No. C0246 / 23 is for right rear solenoid valve.
- DTC No. C0256 / 24 is for left rear solenoid valve.

WIRING DIAGRAM

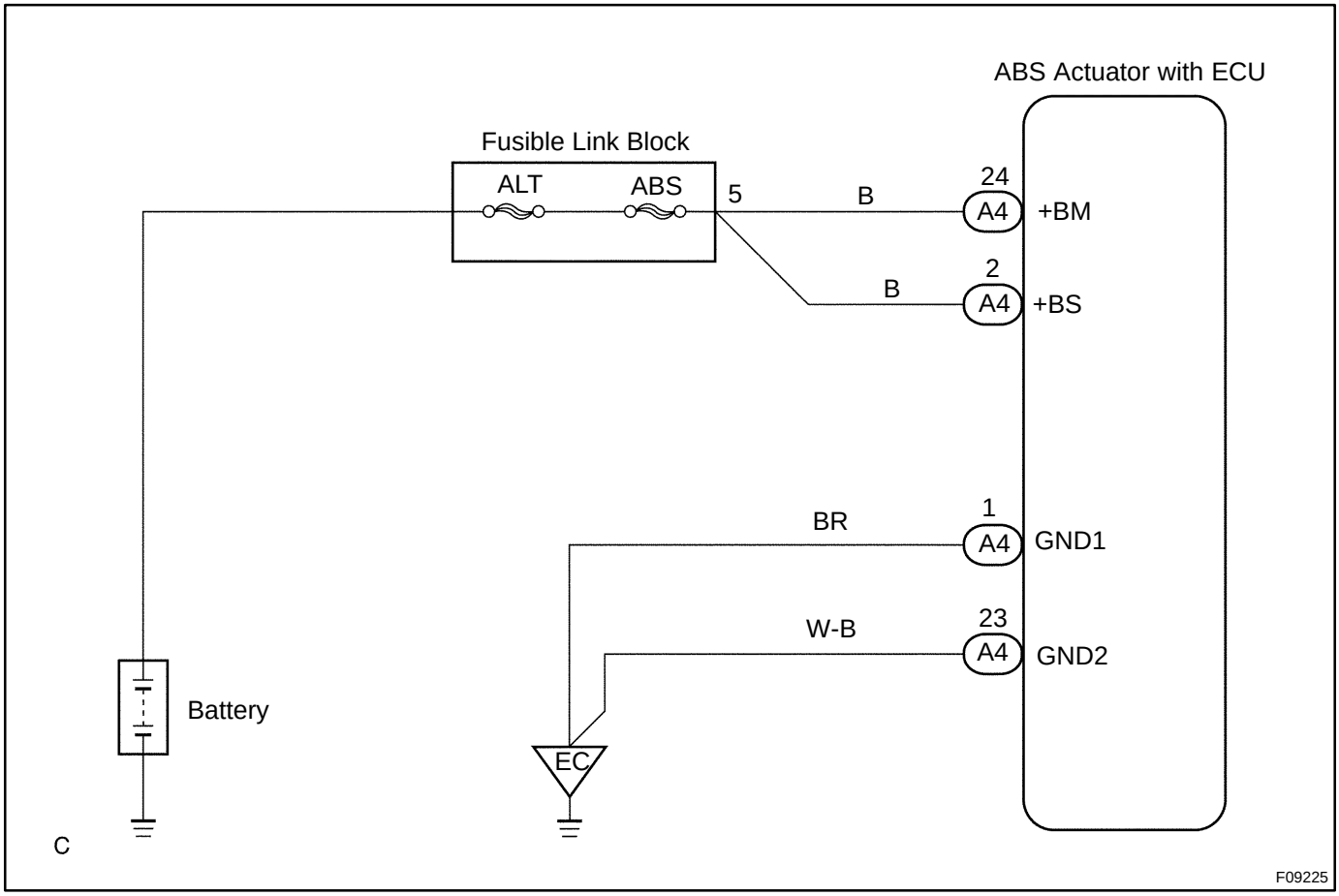

INSPECTION PROCEDURE

1	**Check the DTC once more.**

PREPARATION:

(a) Clear the DTC (See page DI-201).

(b) Turn the ignition switch OFF.

CHECK:

Turn the ignition switch ON, and check that the same DTC is stored in the memory.

NO → **No problem.**

YES

Replace ABS actuator assembly.

DI6SN-04

DTC	C0273 / 13, C0274 / 14	ABS Motor Relay Circuit

CIRCUIT DESCRIPTION

The ABS motor relay supplies power to the ABS pump motor. While the ABS is activated, the ECU switches the ABS motor relay ON and operates the ABS pump motor.

DTC No.	DTC Detecting Condition	Trouble Area
C0273 / 13	Detection of any conditions in 1. and 2.: 1. When ABS motor relay is ON, relay contact is OFF for 0.2 sec. or longer. 2. When ABS motor relay is turned ON, relay contact is OFF for 0.5 sec. or longer.	• ABS motor relay • ABS motor relay circuit • ABS motor voltage
C0274 / 14	Detection of any conditions in 1. and 2.: 1. When ABS motor relay is OFF, relay contact is ON for 0.2 sec. or longer. 2. When ABS motor relay is turned OFF, relay contact is ON for 2 sec. or longer.	

WIRING DIAGRAM

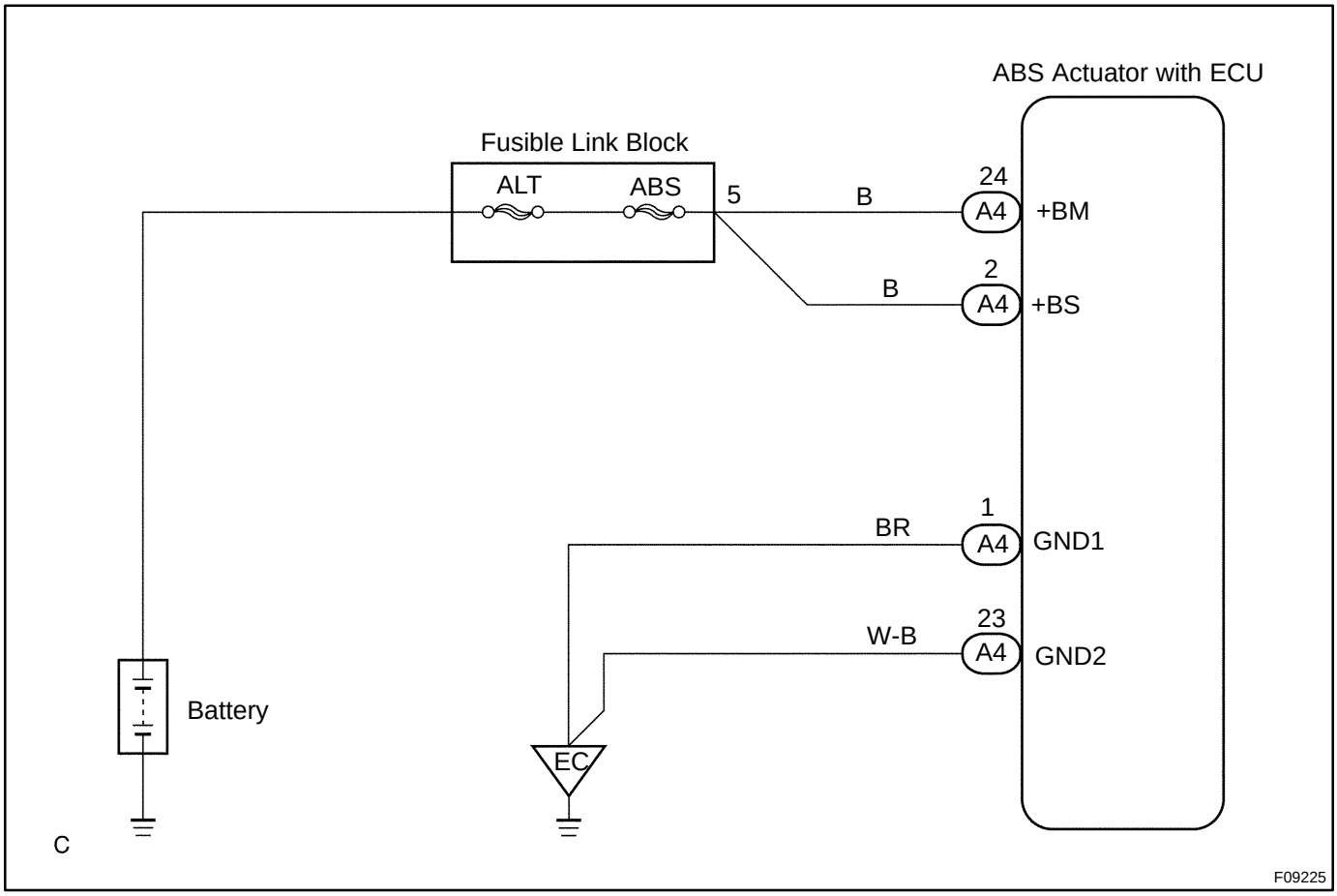

INSPECTION PROCEDURE

HINT:

Start the inspection from step 1 in case of using the TOYOTA hand-held tester and start from step 2 in case of not using TOYOTA hand-held tester.

1	**Check ABS motor relay operation.**

PREPARATION:

(a) Connect the TOYOTA hand-held tester to the DLC3.
(b) Turn the ignition switch ON and push the TOYOTA hand-held tester main switch ON.
(c) Select the ACTIVE TEST mode on the TOYOTA hand-held tester.

CHECK:

Check the operation sound of the ABS motor individually when operating it with the TOYOTA hand-held tester.

OK:

The operation sound of the ABS motor should be heard.

NG → **Check and replace ABS actuator assembly.**

OK

2	**Check voltage between terminals +BM (24) and GND (1, 23) of ABS ECU connector.**

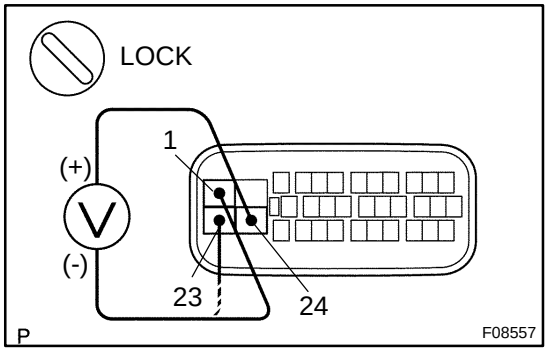

PREPARATION:

Disconnect the ABS ECU connector.

CHECK:

Measure the voltage between terminals 24 and 1, 23 of ABS ECU harness side connector.

OK:

Voltage: 10 - 14 V

NG → **Check and replace ABS fuse.**
Check and repair harness or connector.

OK

If the same code is still output after the DTC is deleted, check the contact condition of each connection. If the connection is normal, the ECU may be defective.

DI6SO-04

DTC	C0278 / 11, C0279 / 12	ABS Solenoid Relay Circuit

CIRCUIT DESCRIPTION

This relay supplies power to each ABS solenoid. After the ignition switch is turned ON, if the initial check is OK, the relay goes on.

DTC No.	DTC Detecting Condition	Trouble Area
C0278 / 11	With IG1 terminal voltage at 8.5 V -19 V, when solenoid relay is turned ON, relay contact is OFF*1 for 0.2 sec. or longer.	• ABS solenoid valve relay • ABS solenoid valve relay circuit • Valve supply voltage
C0279 / 12	Immediately after IG1 is turned ON, when solenoid relay is turned OFF, relay contact is ON*2 for 0.2 sec. or longer.	

*1 Relay contact OFF condition: When all solenoid supplied voltage are below 2.5 V.
*2 Relay contact ON condition: Any of voltage supplied by solenoid is 6 V or more.

WIRING DIAGRAM

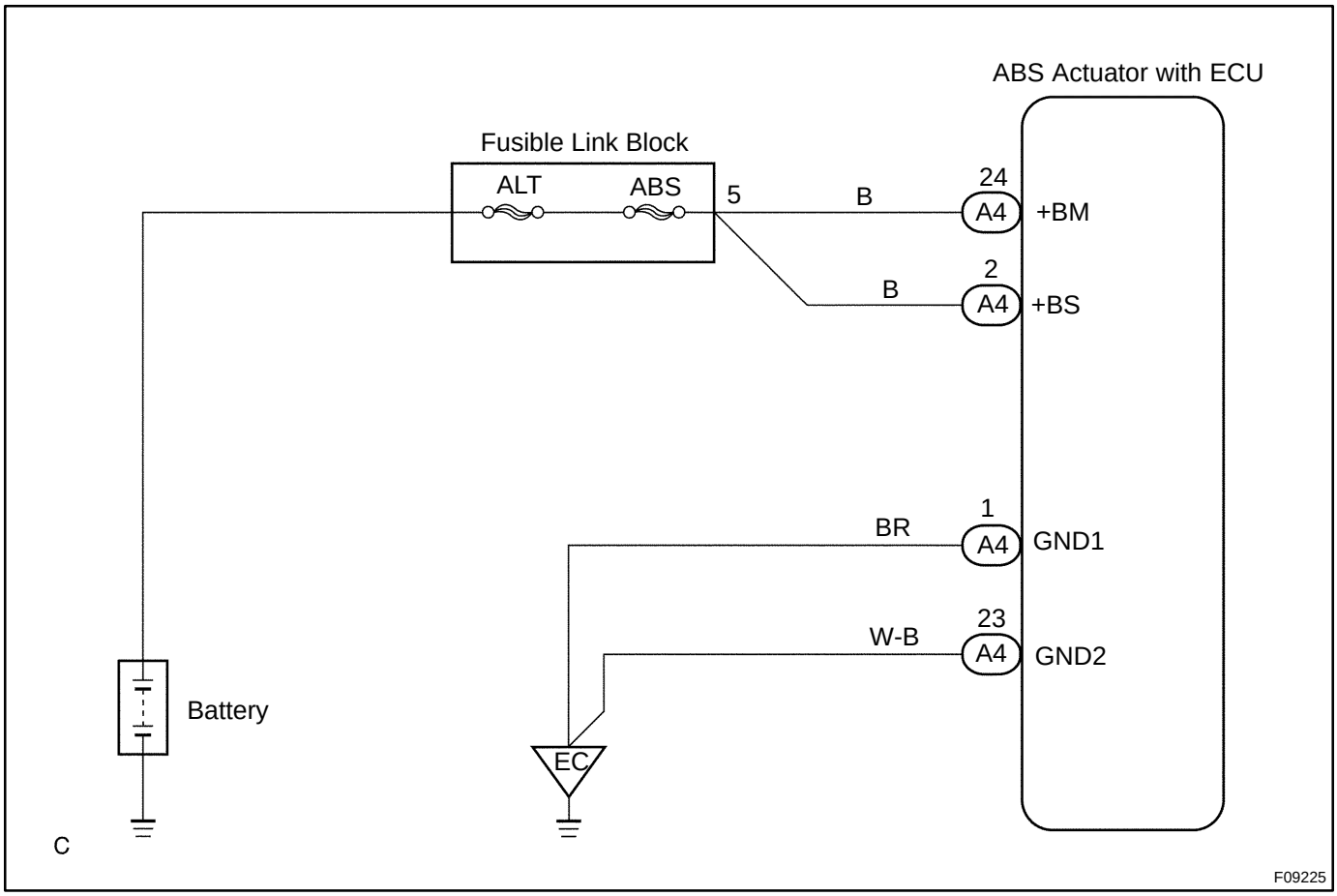

INSPECTION PROCEDURE

HINT:

Start the inspection from step 1 in case of using the TOYOTA hand-held tester and start from step 2 in case of not using the TOYOTA hand-held tester.

1	**Check ABS solenoid relay operation.**

PREPARATION:

(a) Connect the TOYOTA hand-held tester to the DLC3.
(b) Turn the ignition switch ON and push the TOYOTA hand-held tester main switch ON.
(c) Select the ACTIVE TEST mode on the TOYOTA hand-held tester.

CHECK:

Check the operation sound of the ABS solenoid relay when operating it with the TOYOTA hand-held tester.

OK:

The operation sound of the ABS solenoid relay should be heard.

NG → **Check and replace ABS actuator assembly.**

OK

2	**Check voltage between terminals +BS (2) and GND (1, 23) of ABS ECU.**

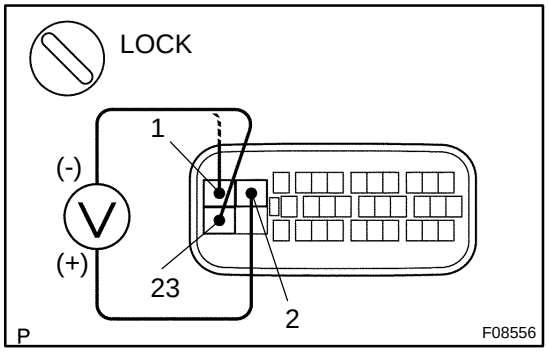

PREPARATION:

Disconnect the ABS ECU connector.

CHECK:

Measure the voltage between terminals 2 and 1, 23 of ABS ECU harness side connector.

OK:

Voltage: 10 - 14 V

NG → **Check and replace ECU-IG fuse.**
Check and repair harness or connector.

OK

If the same code is still output after the DTC is deleted, check the contact condition of each connection. If the connection is normal, the ECU may be defective.

DI6SF-02

CUSTOMER PROBLEM ANALYSIS CHECK

ABS Check Sheet

Inspector's Name :

Customer's Name		**Registration No.**	
		Registration Year	/ /
		Frame No.	
Date Vehicle Brought In	/ /	**Odometer Reading**	km miles

Date Problem First Occurred	/ /
Frequency Problem Occurs	☐ Continuous ☐ Intermittent (times a day)

Symptoms	☐ ABS does not operate.	
	☐ ABS does not operate intermittently.	
	ABS Warning Light Abnormal	☐ Remains ON ☐ Does not Light Up

DTC Check	**1st Time**	☐ Normal Code ☐ Malfunction Code (Code)
	2nd Time	☐ Normal Code ☐ Malfunction Code (Code)

DI6SH-02

DIAGNOSTIC TROUBLE CODE CHART

NOTICE:

When removing the part, turn the ignition switch OFF.

HINT:

- Using SST 09843-18040, connect the terminals Tc and CG of DLC3.
- If any abnormality is not found when inspecting each inspection part, inspect ECU.
- If a malfunction code is displayed during the DTC check, check the circuit listed for that code. For details of each code, turn to the page referred to under the "See page" for respective "DTC No." in the DTC chart.

DTC No. (See Page)	Detection Item	Trouble Area
C0278 / 11 (DI-220)	Open circuit in ABS solenoid valve relay circuit	• ABS solenoid valve relay (Included ABS ECU) • ABS solenoid valve relay circuit • Valve supply voltage
C0279 / 12 (DI-220)	Short circuit in ABS solenoid valve relay circuit	
C0273 / 13 (DI-218)	Open circuit in ABS motor relay circuit	• ABS motor relay (Included ABS ECU) • ABS motor relay circuit • ABS motor voltage
C0274 / 14 (DI-218)	Short circuit in ABS motor relay circuit	
C0226 / 21 (DI-216)	Right front solenoid valve faulty	• Right front solenoid valve circuit • ABS actuator
C0236 / 22 (DI-216)	Left front solenoid valve faulty	• Left front solenoid valve circuit • ABS actuator
C0246 / 23 (DI-216)	Right rear solenoid valve faulty	• Right rear solenoid valve circuit • ABS actuator
C0256 / 24 (DI-216)	Left rear solenoid valve faulty	• Left rear solenoid valve circuit • ABS actuator
C0200 / 31* (DI-209)	Right front wheel speed sensor signal malfunction	• Right front, left front, right rear, left rear speed sensor • Each speed sensor circuit • Sensor installation • Sensor rotor
C0205 / 32* (DI-209)	Left front wheel speed sensor signal malfunction	
C0210 / 33* (DI-209)	Right rear wheel speed sensor signal malfunction	
C0215 / 34* (DI-209)	Left rear wheel speed sensor signal malfunction	
C1241 / 41 (DI-222)	Low battery positive voltage or abnormally high battery positive voltage	• Battery • Charging system • Power source circuit
C1249 / 49 (DI-225)	Open circuit in stop light switch circuit	• Stop light valve • Stop light switch • Stop light switch circuit
C1251 / 51* (DI-227)	Pump motor is locked	ABS pump motor
Always ON (DI-229)	Malfunction in ECU IG power source circuit	• Battery • Charging system • Power source circuit • ABS ECU • ABS waring light circuit

* : As the DTC cannot be erased by replacing parts alone, do either of the following operations.

- Clear the DTC (See page DI-201).
- At the vehicle speed of 20 km/h (12 mph), drive the vehicle for 30 sec. or more.

DI6TP-01

Check for Fluid Leakage

Check for fluid leakage from actuator or hydraulic lines.

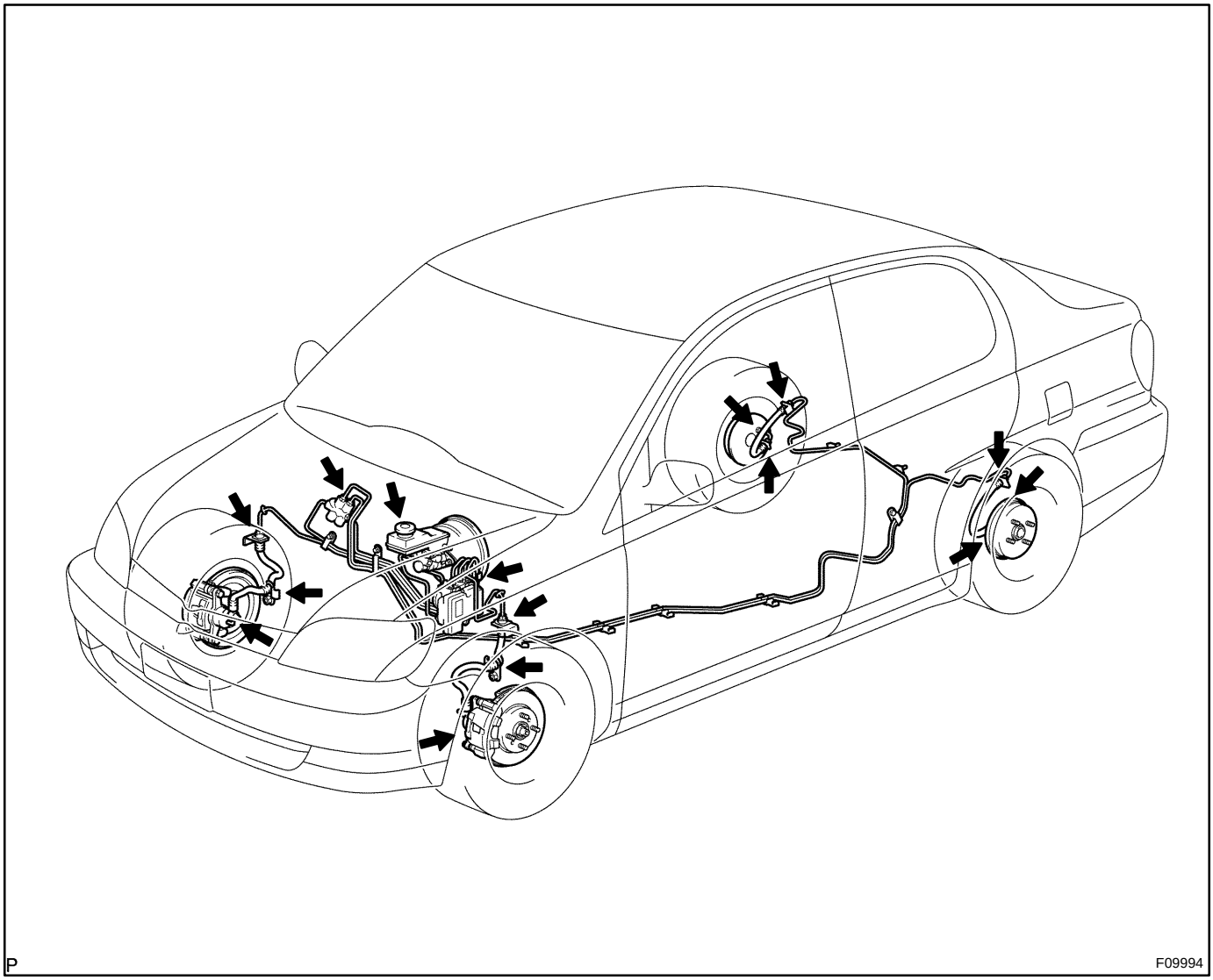

P F09994

ANTI-LOCK BRAKE SYSTEM

DI6SE-03

HOW TO PROCEED WITH TROUBLESHOOTING

Troubleshoot in accordance with the procedure on the following pages.

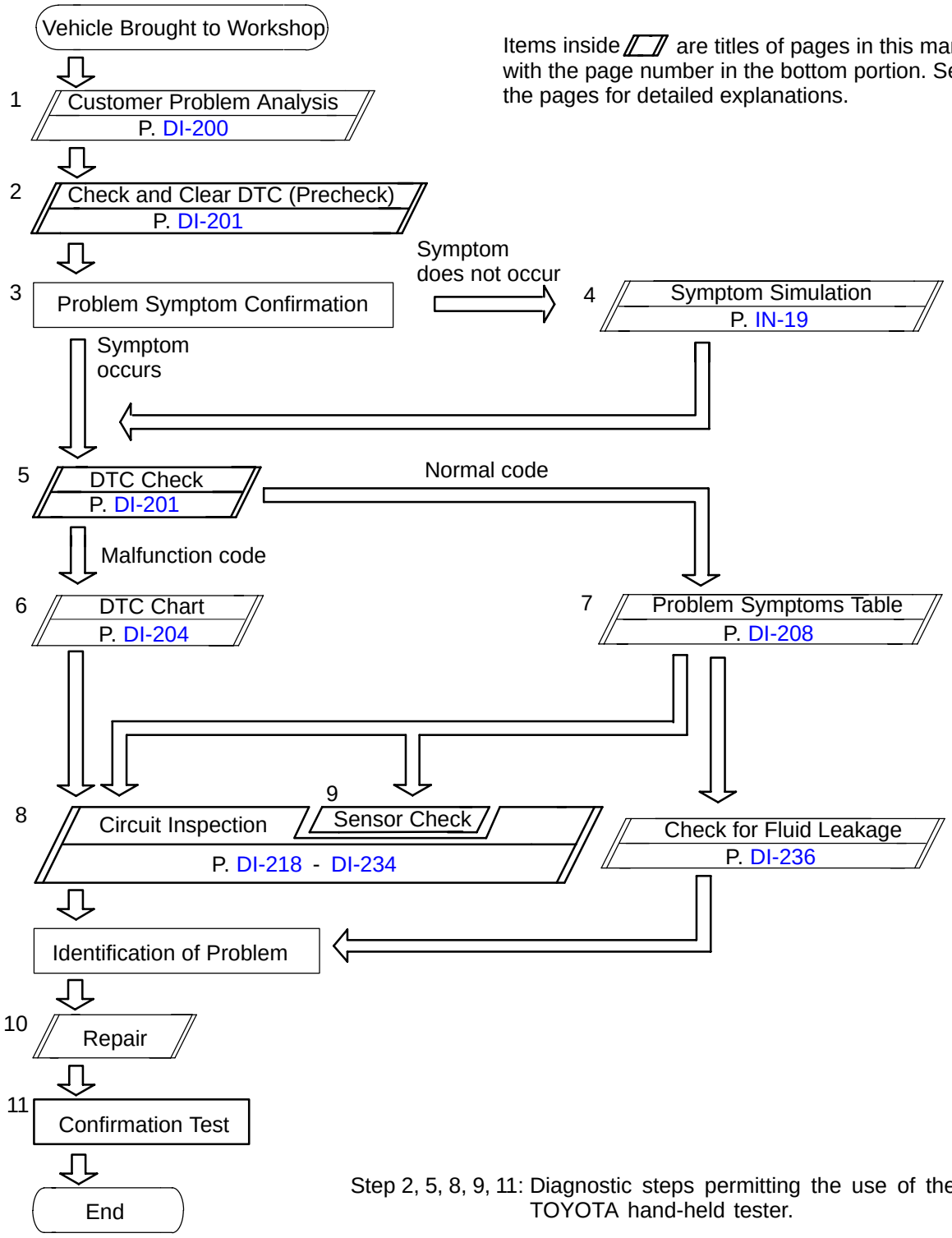

Items inside ▱ are titles of pages in this manual, with the page number in the bottom portion. See the pages for detailed explanations.

Step 2, 5, 8, 9, 11: Diagnostic steps permitting the use of the TOYOTA hand-held tester.

Fail safe function:
In the event of a malfunction in the ABS system, the ABS ECU turns on the ABS warning light and prohibits the ABS control.

DI6TO-01

PARTS LOCATION

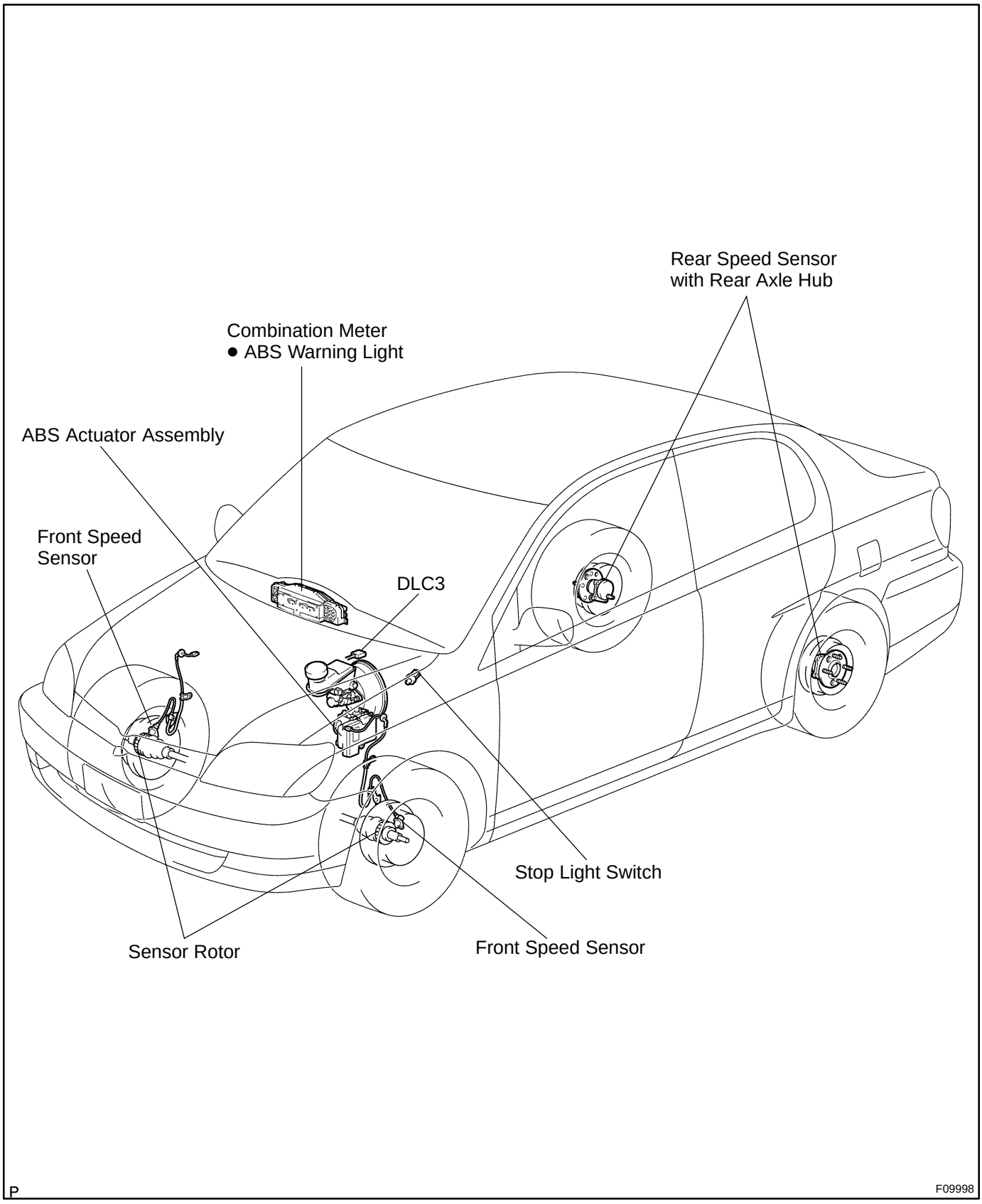

DI6SG-02

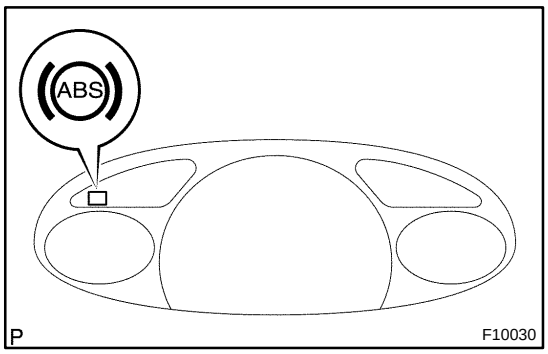

PRE-CHECK

1. DIAGNOSIS SYSTEM

(a) Check the indicator.
When the ignition switch is turned ON, check that the ABS warning light goes on for approx. 3 seconds.

HINT:
If the indicator check result is not normal, proceed to trouble-shooting for the ABS warning light circuit (See page DI-231).

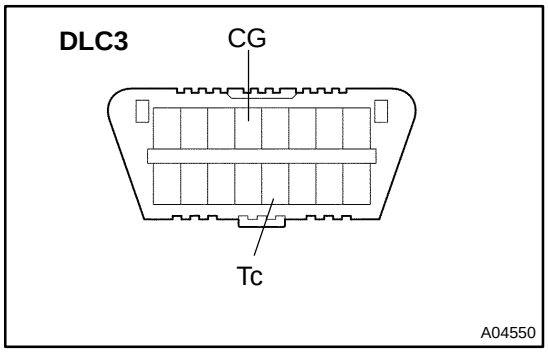

(b) In case of not using TOYOTA hand-held tester:
Check the DTC.
(1) Using SST, connect terminals Tc and CG of DLC3.
SST 09843-18040
(2) Turn the ignition switch ON.
(3) Read the DTC from the ABS warning light on the combination meter.

HINT:

- If no code appears, inspect the diagnostic circuit or ABS warning light circuit (See page DI-234 or DI-231).
- As an example, the blinking patterns for normal code and codes 11 are shown on the left.
(4) Codes are explained in the code table on page DI-204 .
(5) After completing the check, disconnect terminals Tc and CG, and turn off the ignition switch.
Even if 2 or more malfunctions are detected, the lowest numbered DTC will be displayed.

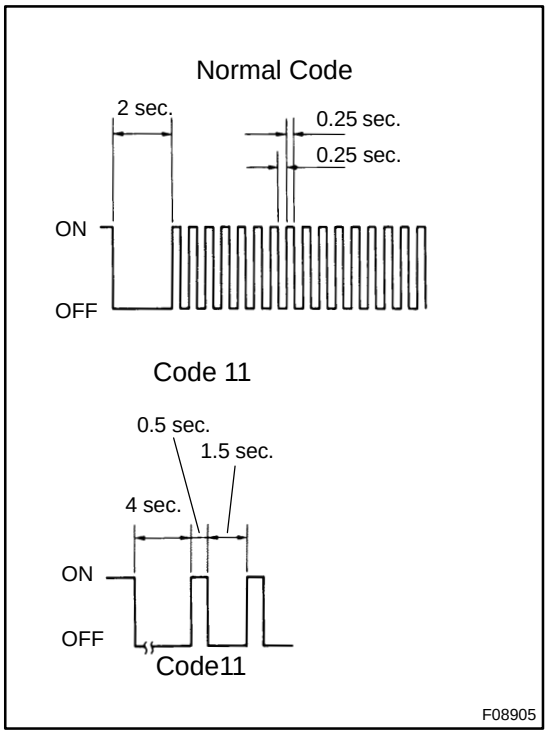

(c) In case of using TOYOTA hand-held tester:
Check the DTC.
(1) Hook up the TOYOTA hand- held tester to the DLC3.
(2) Turn the ignition switch ON.
(3) Read the DTC by following the prompts on the tester screen.
Please refer to the TOYOTA hand-held tester operator's manual for further details.

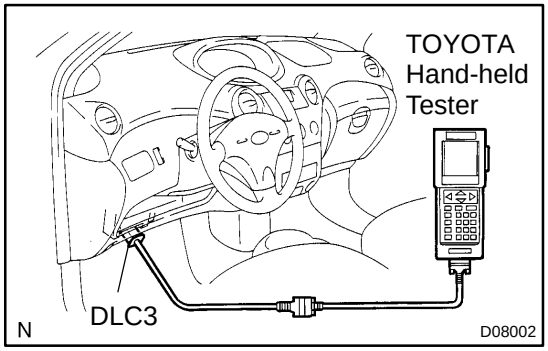

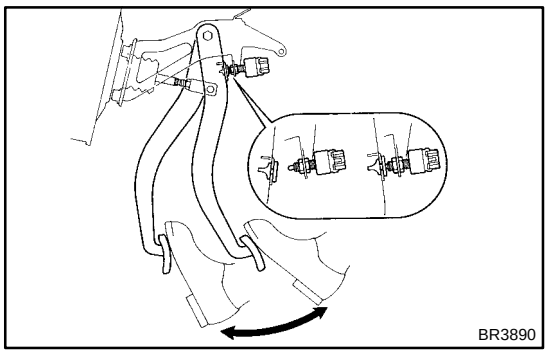

(d) In case of not using TOYOTA hand-held tester:
Clear the DTC.
(1) Using SST, connect terminals Tc and CG of DLC3.
SST 09843-18040
(2) Turn the ignition switch ON.
(3) Clear the DTC stored in ECU by depressing the brake pedal 8 or more times within 5 seconds.
(4) Check that the warning light shows the normal code.
(5) Remove the SST from the terminals of DLC3.
SST 09843-18040

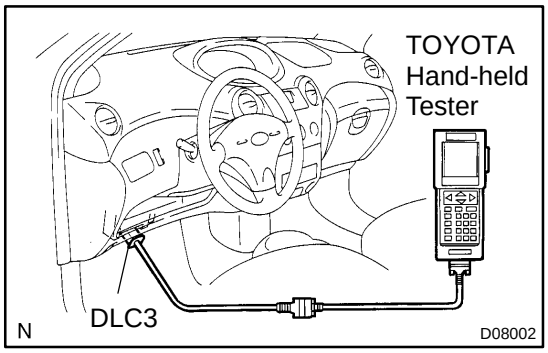

(e) In case of using TOYOTA hand-held tester:
Clear the DTC.
(1) Hook up the TOYOTA hand- held tester to the DLC3.
(2) Turn the ignition switch ON.
(3) Operate the TOYOTA hand-held tester to erase code (See TOYOTA hand-held tester operator's manual.).

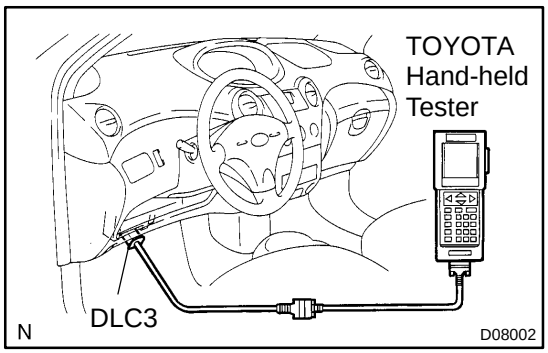

2. SPEED SENSOR SIGNAL CHECK (TEST MODE)

(a) Hook up the TOYOTA hand-held tester to the DLC3.
(b) Start the engine.
(c) Drive vehicle faster than 45 km/h (28 mph) for several seconds.

HINT:
There is a case that the sensor check is not completed if the vehicle has its wheels spined or its steering wheel steered during this check.

(d) Read the DTC, from TOYOTA hand-held tester screen.

HINT:
See the list of DTC shown on the next page.
Please refer to the TOYOTA hand-held tester operator's manual for further details.

DTC of speed sensor check function:

Code No.	Diagnosis	Trouble Area
C1271 / 71	Low output voltage of right front speed sensor	• Right front speed sensor • Right front speed sensor rotor • Sensor installation
C1272 / 72	Low output voltage of left front speed sensor	• Left front speed sensor • Left front speed sensor rotor • Sensor installation
C1273 / 73	Low output voltage of right rear speed sensor	• Right rear speed sensor • Right rear speed sensor rotor • Sensor installation
C1274 / 74	Low output voltage of left rear speed sensor	• Left rear speed sensor • Left rear speed sensor rotor • Sensor installation
C1275 / 75	Abnormal change in output voltage of right front speed sensor	Right front speed sensor rotor
C1276 / 76	Abnormal change in output voltage of left front speed sensor	Left front speed sensor rotor
C1277 / 77	Abnormal change in output voltage of right rear speed sensor	Right rear speed sensor rotor
C1278 / 78	Abnormal change in output voltage of left rear speed sensor	Left rear speed sensor rotor

DI6SK-02

PROBLEM SYMPTOMS TABLE

If a normal code is displayed during the DTC check but the problem still occurs, check the circuits for each problem symptom in the order given in the table below and proceed to the relevant troubleshooting page.

Symptom	Suspect Area	See page
ABS does not operate.	Only when 1. - 4. are all normal and the problem is still occurring, replace the ABS actuator assembly. 1. Check the DTC reconfirming that the normal code is output. 2. Power source circuit 3. Speed sensor circuit 4. Check the ABS actuator with a TOYOTA hand-held tester. If abnormal, check the hydraulic circuit for leakage (See page DI-236).	DI-201 DI-222 DI-209 BR-33
ABS does not operate efficiently.	Only when 1. - 5. are all normal and the problem is still occurring, replace the ABS actuator assembly. 1. Check the DTC reconfirming that the normal code is output. 2. Speed sensor circuit 3. Stop light switch circuit 4. Power source circuit 5. Check the ABS actuator with a TOYOTA hand-held tester. If abnormal, check the hydraulic circuit for leakage (See page DI-236).	DI-201 DI-209 DI-225 DI-222 BR-33
ABS warning light abnormal.	1. ABS warning light circuit 2. ABS ECU	DI-231 IN-29
DTC check cannot be done.	Only when 1. and 2. are all normal and the problem is still occurring, replace the ABS actuator assembly. 1. ABS warning light circuit 2. Tc terminal circuit	DI-231 DI-234
Speed sensor signal check cannot be done.	ABS ECU	IN-29

DI6SV-02

Tc Terminal Circuit

CIRCUIT DESCRIPTION

Connecting between terminals Tc and CG of the DLC3 causes the ECU to display the DTC by flashing the ABS warning light.

WIRING DIAGRAM

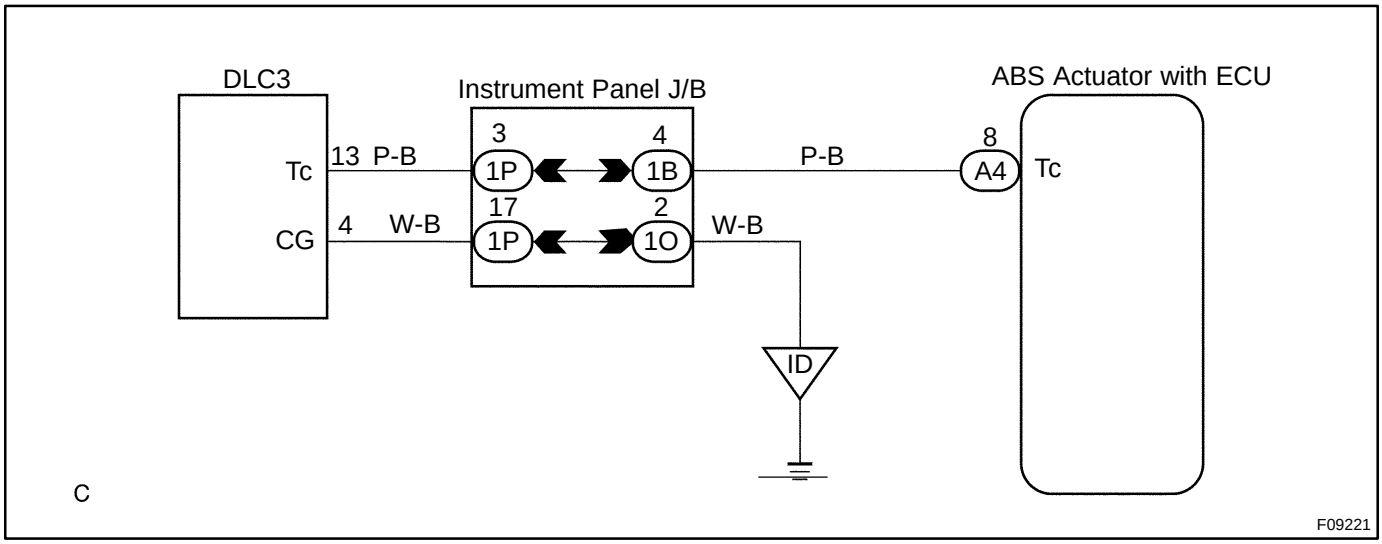

INSPECTION PROCEDURE

1	**Check voltage between terminals Tc and CG of DLC3.**

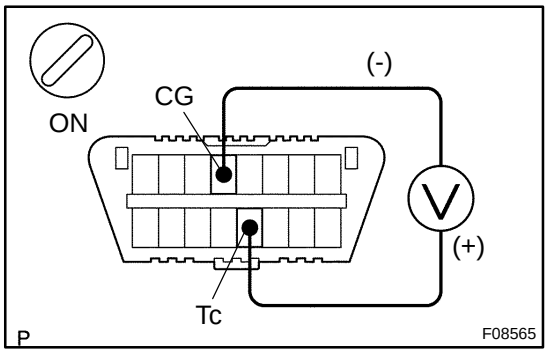

CHECK:

(a) Turn the ignition switch ON.

(b) Measure voltage between terminals Tc and CG of DLC3.

OK:

Voltage: 10 - 14 V

OK → **If ABS warning light does not blink even after Tc and CG are connected, the ECU may be defective.**

NG

2	**Check for open and short circuit in harness and connector between ABS ECU and DLC3, DLC3 and body ground (See page IN-29).**

NG → **Repair or replace harness or connector.**

OK

Check and replace ABS actuator assembly.

DI6SJ-04

TERMINALS OF ECU

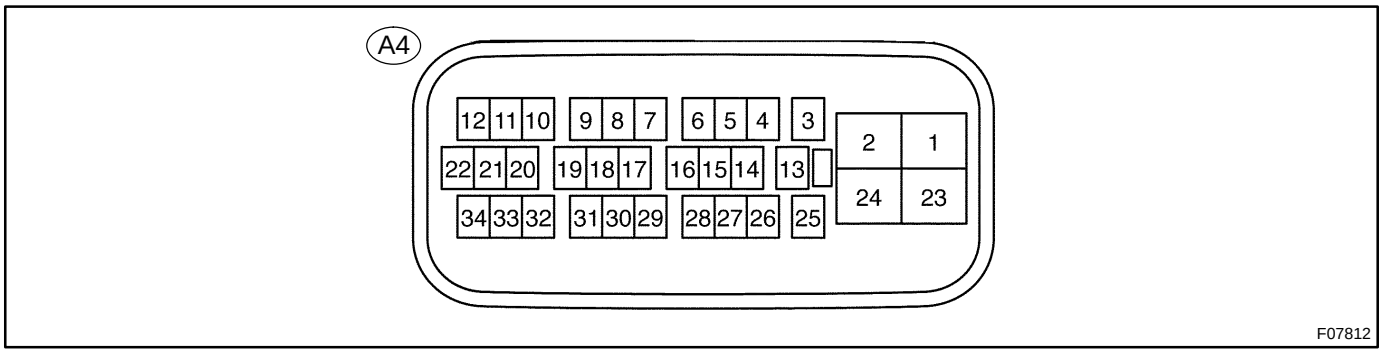

Symbols (A4 - Terminals No.)	Wiring Color	Condition	STD Voltage (A4 - V)
IG (A4 - 3) - GND (A4 - 1, 23)	B-L ↔ BR, W-B	IG switch ON	10 - 14
+BS (A4 - 2) - GND (A4 - 1, 23)	B ↔ BR, W-B	Always	10 - 14
RR+ (A4 - 5) - RR- (A4 - 4)	L ↔ R	IG switch ON Slowly turn right rear wheel	AC generation
RL+ (A4 - 7) - RL- (A4 - 6)	L ↔ P	IG switch ON Slowly turn left rear wheel	AC generation
Tc (A4 - 8) - GND (A4 - 1, 23)	P-B ↔ BR, W-B	IG switch ON	10 - 14
FL+ (A4 - 13) - FL- (A4 - 26)	R ↔ G	IG switch ON Slowly turn left front wheel	AC generation
STP (A4 - 16) - GND (A4 - 1, 23)	G-W ↔ BR, W-B	Stop light switch ON	10 - 14
		Stop light switch OFF	Below 1.0
+BM (A4 - 24) - GND (A4 - 1, 23)	B ↔ BR, W-B	Always	10 - 14
FR+ (A4 - 27) - FR- (A4 - 28)	B ↔ W	IG switch ON Slowly turn right front wheel	Below 1.0
WA (A4 - 30) - GND (A4 - 1, 23)	P ↔ BR, W-B	IG switch ON, ABS warning light ON	7 - 10
		IG switch ON, ABS warning light OFF	Below 2.0

DI6UJ-01

DTC	P1520	Stop Light Switch Signal Malfunction

CIRCUIT DESCRIPTION

The purpose of this circuit is to prevent the engine from stalling, while driving in lock-up condition, when brakes are suddenly applied.
When the brake pedal is operated, this switch sends a signals to ECM. Then the ECM cancels operation of the lock-up clutch while braking is in progress.

DTC No.	DTC Detecting Condition	Trouble Area
P1520	No stop light switch signal to ECM during driving. (2-trip detection logic)	• Open or short in stop light switch circuit • Stop light switch • ECM

WIRING DIAGRAM

See page DI-129 .

INSPECTION PROCEDURE

See page DI-129 .

DI6UI-01

DTC	P1725	NT Revolution Sensor Circuit Malfunction (Input Turbine Speed Sensor)

CIRCUIT DESCRIPTION

This sensor detects the rotation speed of the input turbine. By comparing the input turbine speed signal (NT) and the counter gear speed sensor signal (NC), the ECM detects the shift timing of the gears and appropriately controls the engine torque and hydraulic pressure in response to various conditions, thus performing smooth gear shifting.

DTC No.	DTC Detecting Condition	Trouble Area
P1725	The ECM detect conditions (a), (b), (c) and (d) continuity for 5 secs or more. (1-trip detection logic) (a) Vehicle speed: 50 km/h (20 mph) or more (b) 2nd, 3rd or O/D gear (c) Solenoid valves and park/neutral position switch are normal (d) NT < 300 rpm	• Open or short in input turbine (NT) speed sensor circuit • Input turbine (NT) speed sensor • ECM

WIRING DIAGRAM

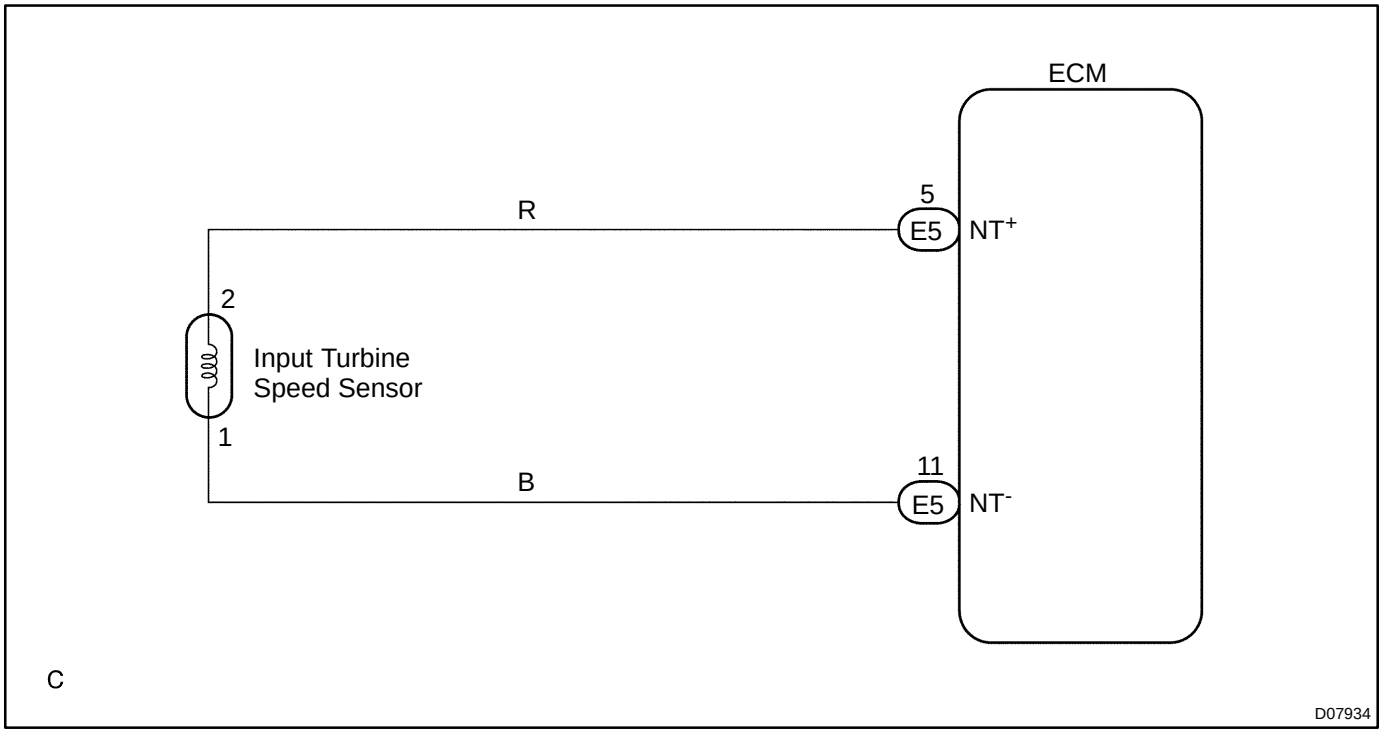

INSPECTION PROCEDURE

1	Check resistance between terminals NT^+ and NT^- of ECM.

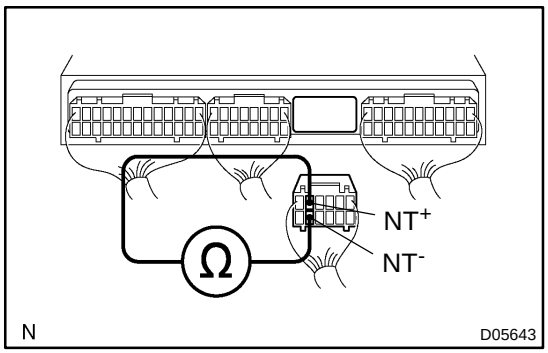

PREPARATION:
Disconnect the connector from ECM.
CHECK:
Check resistance between terminals NT^+ and NT^- of ECM.
OK:
Resistance: 620 ± 60 Ω

OK → **Check and replace the ECM.**

NG

2	Check input turbine speed sensor.

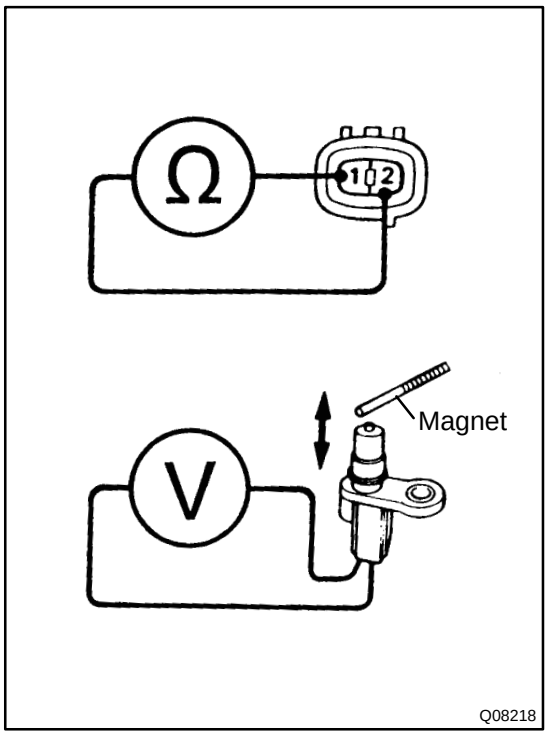

PREPARATION:
Remove the input turbine speed sensor from transaxle.
CHECK:
(a) Measure resistance between terminals 1 and 2 of speed sensor.
(b) Check voltage between terminals 1 and 2 of the speed sensor when a magnet is put close to the front end of the speed sensor then taken away quickly.
OK:
(a) Resistance: 620 ± 60 Ω at 20 ˚C (68 ˚F)
(b) Voltage is generated intermittently.
HINT:
The generated voltage is extremely low.

NG → **Replace the input turbine speed sensor.**

OK

Check and repair the harness and connector between ECM and input turbine speed sensor (See page IN-29).

DI6UH-02

DTC	P1760	Linear Solenoid for Line Pressure Control Circuit Malfunction (Solenoid Valve SLT)

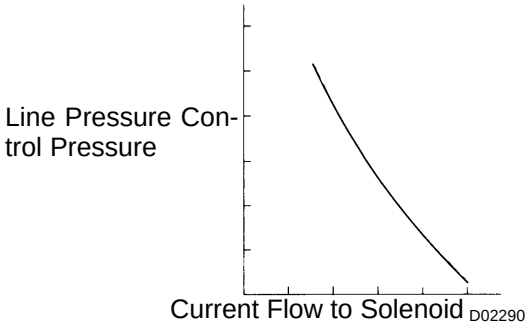

CIRCUIT DESCRIPTION

The throttle pressure that is applied to the primary regulator valve (which modulates line pressure) causes the shift solenoid valve SLT, under electronic control, to precisely and minutely modulate and generate line pressure according to the accelerator pedal effort, or engine power output detected.
This reduces the function of line pressure and provides smooth shifting characteristics.
Upon receiving the throttle valve opening angle signal, ECM controls the line pressure by sending a predetermined (*) duty ratio to the solenoid valve, modulating the line pressure, generating throttle pressure.
(*) Duty Ratio
The duty ratio is the ratio of the period of continuity in one cycle.
For example, if A is the period of continuity in one cycle, and B is the period of non-continuity, then

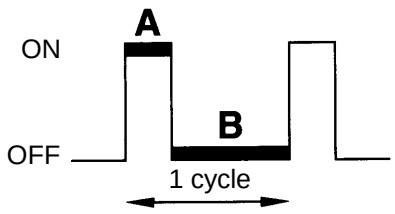

$$\text{Duty Ratio} = \frac{A}{A + B} \times 100\ (\%)$$

DTC No.	DTC Detecting Condition	Trouble Area
P1760	(a) or (b) condition below is detected 1 second or more. (a) SLT^- terminal: 0V (b) SLT^- terminal: 12V	• Open or short in shift solenoid valve SLT circuit • Shift solenoid valve SLT • ECM

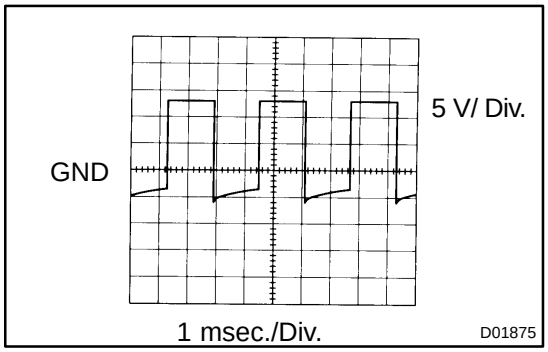

HINT:
Refer to the chart for the wave form between terminals SLT^+ and SLT^- during engine idling.

WIRING DIAGRAM

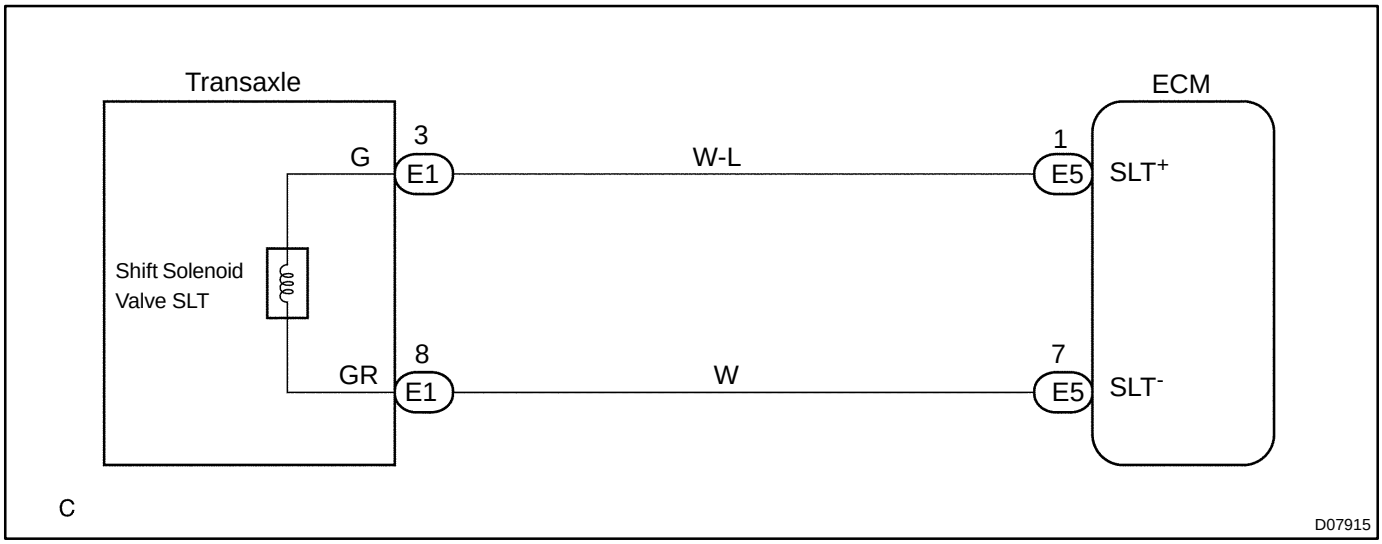

INSPECTION PROCEDURE

1	**Check shift solenoid valve SLT.**

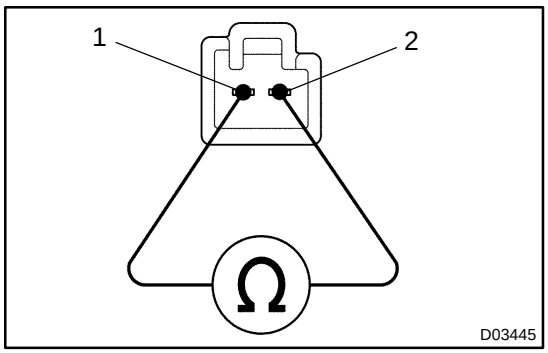

PREPARATION:
(a) Jack up the vehicle.
(b) Remove the oil pan.
(c) Disconnect the solenoid connector.

Check solenoid resistance:

CHECK:
Measure resistance between terminals 1 and 2 of solenoid connector.

OK:
Resistance: 5.0 - 5.6 Ω at 20 ˚C (68 ˚F)

NG → **Replace shift solenoid valve SLT.**

OK

2	**Check harness and connector between shift solenoid valve SLT and ECM (See page IN-29).**

NG → **Repair or replace harness or connector.**

OK

Replace ECM (See page IN-29).

DI6UG-02

DTC	P1780	Park/Neutral Position Switch Malfunction

CIRCUIT DESCRIPTION

The neutral start switch detects the shift lever position and sends signals to the ECM. The ECM receives signals (NSW, R, D, 2 and L) from the park/neutral position switch.

DTC No.	DTC Detecting Condition	Trouble Area
P1780	When driving under conditions (a), (b), (c) and (d) for 30 seconds or more, the park/neutral position switch is ON (N position). (2-trip detection condition) (a) Vehicle speed: 70 km/h (44 mph) or more (b) Engine speed: 1,500 - 2,500 (c) Engine load: 0.6 g/rev (d) Manifold absolute pressure: 350 mmHg or more	• Shot in park/neutral position switch circuit • Park/neutral position switch • ECM

WIRING DIAGRAM

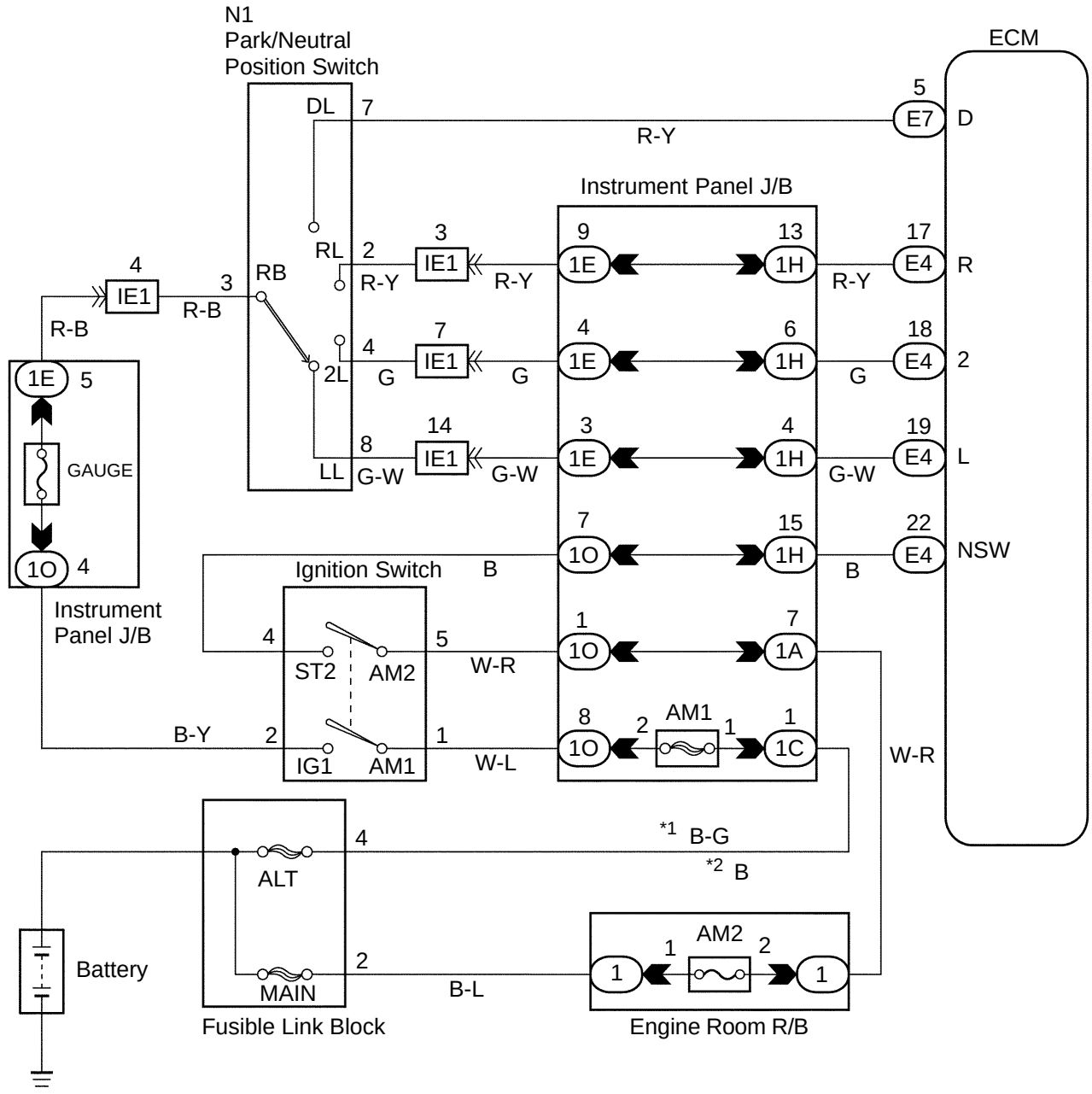

INSPECTION PROCEDURE

1	**Read PNP, REVERSE, 2ND and LOW signals.**

When using TOYOTA hand-held tester:

PREPARATION:

(a) Connect a hand-held tester to the DLC3.

(b) Turn the ignition switch ON and TOYOTA hand-held tester main switch ON.

CHECK:

Shift lever into the P, R, N, 2 and L positions, and read the NSW, REVERSE, 2ND and LOW signals on the hand-held tester.

OK:

Shift range	Signal
2	2ND OFF → ON
L	LOW OFF → ON
D	DRIVE OFF → ON
R	REVERSE OFF → ON
P, N	NSW OFF → ON

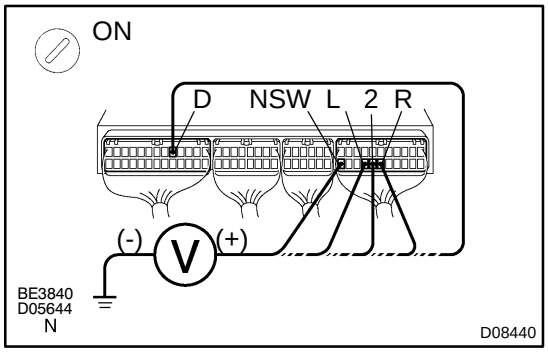

When not TOYOTA using hand-held tester:

PREPARATION:

Turn the ignition switch ON.

CHECK:

Measure voltage between each of terminals NSW, R, D, 2 and L of ECM and body ground when the shift lever is shifted to the following positions.

OK:

Position	NSW-Body ground	R-Body ground	D-Body ground	2-Body ground	L-Body ground
P	9 - 14 V	0 V	0 V	0 V	0 V
R	0 V	9 - 14 V	0 V	0 V	0 V
N	0 V	0 V	0 V	0 V	0 V
D	0 V	0 V	9 - 14 V	0 V	0 V
2	0 V	0 V	0 V	9 - 14 V	0 V
L	0 V	0 V	0 V	0 V	9 - 14 V

HINT:

*: The voltage will drop slightly due to lighting up of the back up light.

OK → **Check and replace the ECM.**

NG

2	Check park/neutral position switch.

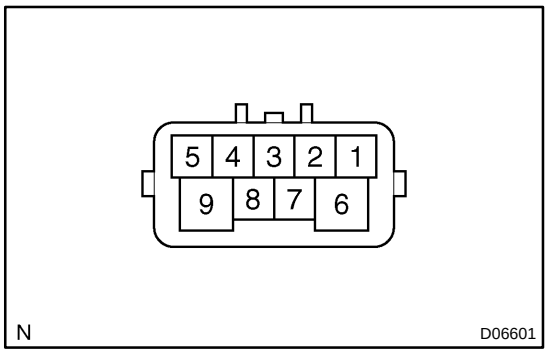

PREPARATION:

Remove the park/neutral position switch.

CHECK:

Check continuity between each terminal shown below when the shift lever is moved to each position.

Shift position	Terminal No. to continuity	
P	3 - 5	6 - 9
R	3 - 4	-
N	1 - 3	6 - 9
D	3 - 8	-
2	2 - 3	-
L	3 - 7	-

OK:

There is continuity.

NG → **Replace the park/neutral position switch.**

OK

3	Check harness and connector between battery and park/neutral position switch, park/neutral position switch and ECM (See page IN-29).

NG → **Repair or replace the harness and connector.**

OK

Check and replace the ECM (See page IN-29).

DI6UF-02

DTC	P1790	ST Solenoid Valve Circuit Malfunction

CIRCUIT DESCRIPTION

Shift solenoid valve ST is switched ON-OFF by a signal from ECM so that let in or out timing of 2nd brake is adjusted by operating orifice control valve. Therefore, shift solenoid valve ST operates when letting in or out reverse clutch.
If it is broken, the shift shock becomes big.

DTC No.	DTC Detecting Condition	Trouble Area
P1790	ECU memorizes DTC P1790 if (a) or (b) condition below is detected once or more, but ECU does not start MIL blinking. (a) Solenoid resistance is 30 Ω or lower (short circuit) when solenoid energized. (b) Solenoid resistance is 100 kΩ or higher (open circuit) when solenoid is not energized.	• Open or short in shift solenoid valve ST circuit • Shift solenoid valve ST • MIL

WIRING DIAGRAM

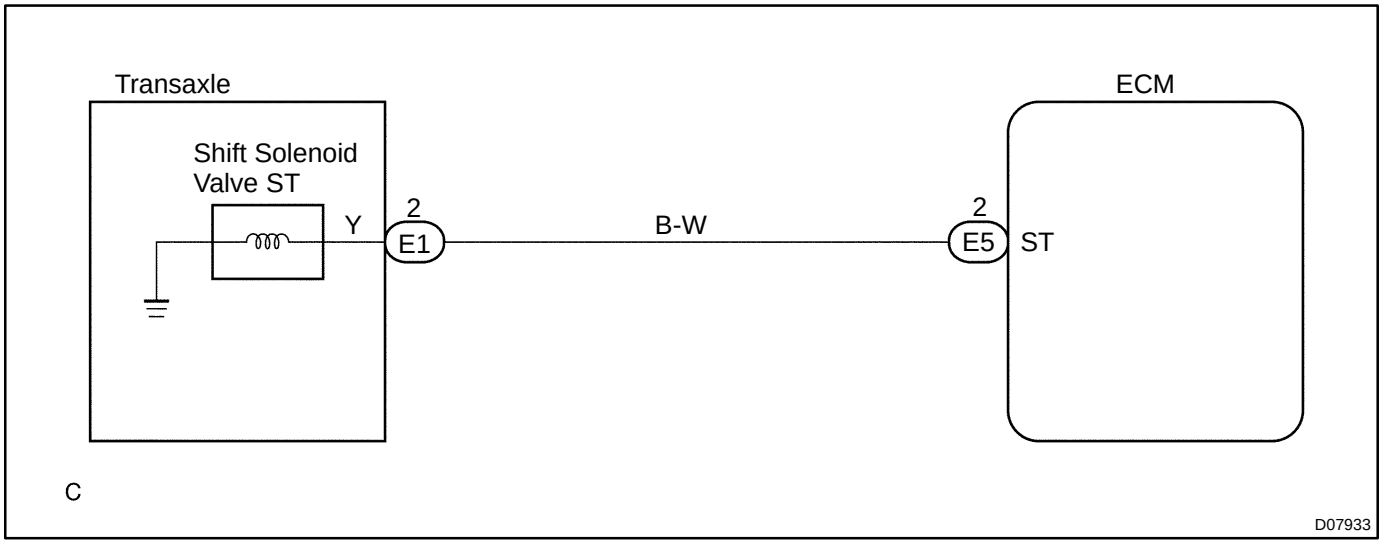

INSPECTION PROCEDURE

1	Measure resistance between terminal ST of ECM and body ground.

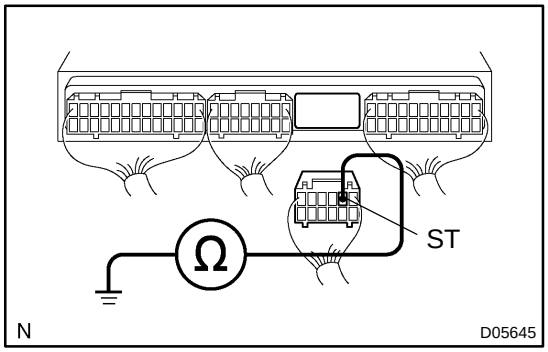

PREPARATION:
Disconnect the connector from ECM.
CHECK:
Measure resistance between terminal ST of ECM and body ground.
OK:
Resistance: 11 - 15 Ω at 20 ˚C (68 ˚F)

OK	Check and replace the ECM (See page IN-29).

NG

2	Measure harness and connector between ECM and automatic transaxle solenoid connector.

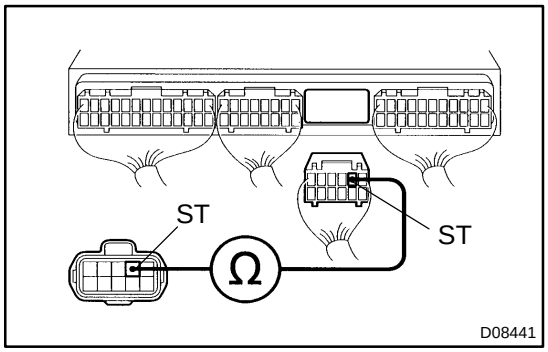

PREPARATION:
Disconnect the solenoid connector from the automatic transaxle.
CHECK:
Measure the harness and connector between terminal ST of ECM and terminal ST of solenoid connector.
OK:
Resistance: 0 Ω

NG	Repair or replace the harness or connector.

OK

3	Check connection of the connectors.

NG	Connect the connectors correctly.

OK

4	**Check shift solenoid valve ST.**

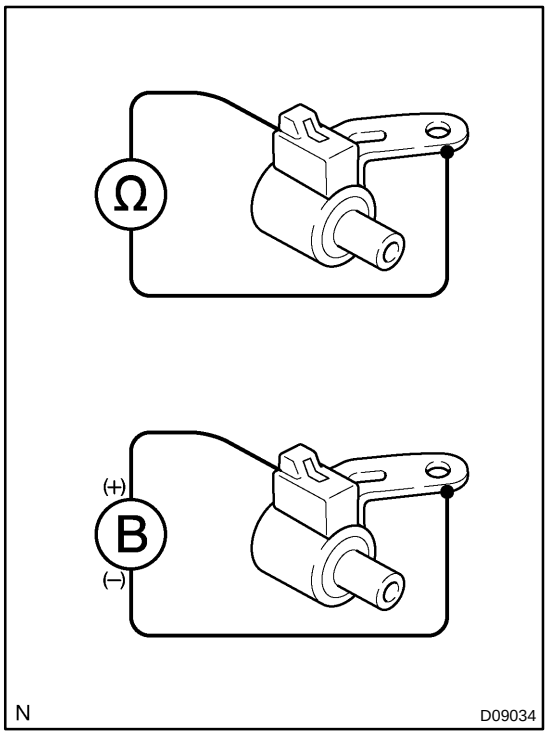

PREPARATION:

(a) Jack up the vehicle.
(b) Remove the oil pan.
(c) Disconnect the solenoid connector.
(d) Remove the shift solenoid valve ST.

CHECK:

(a) Measure resistance between solenoid connector and body ground.
(b) Connect positive ⊕ lead to terminal of solenoid connector, negative ⊖ lead to solenoid body.

OK:

(a) Resistance: 11 - 15 Ω at 20 ˚C (68 ˚F)
(b) The solenoid makes an operating noise.

NG → **Replace the solenoid valve.**

OK

Repair or replace the solenoid wire.

DI6UP-01

CIRCUIT INSPECTION

DTC	P0500	Vehicle Speed Sensor Malfunction

CIRCUIT DESCRIPTION

The vehicle speed sensor outputs a 4-pulse signal for every revolution of the transaxle output shaft. After this signal is converted into a more precise rectangular wave form by the wave form shaping circuit inside the combination meter, it is then transmitted to the ECM.

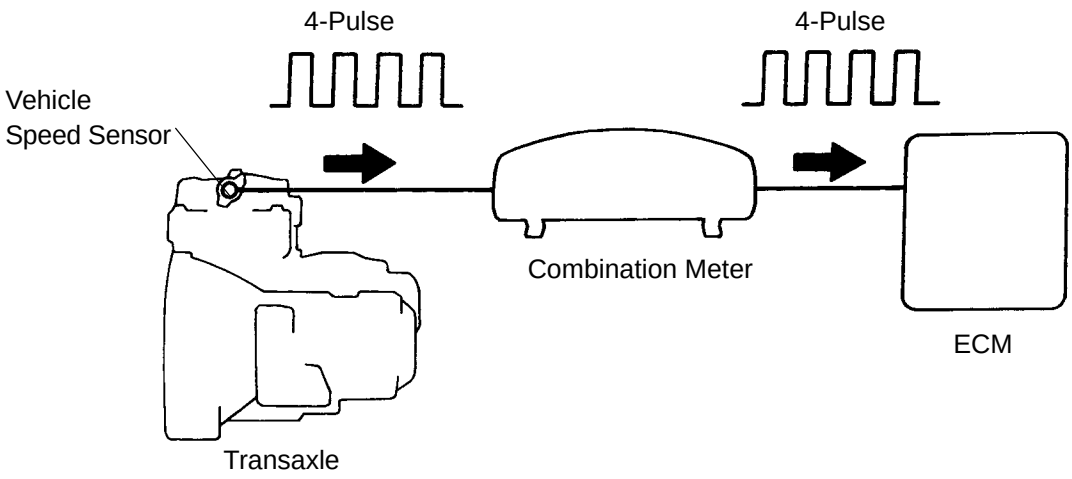

DTC No.	DTC Detecting Condition	Trouble Area
P0500	No vehicle speed sensor signal to ECM under condition (1) and (2); (2-trip detection logic) 1. Park/neutral position switch is OFF 2. Vehicle is being driven	• Combination meter • Open or short in vehicle speed sensor circuit • Vehicle speed sensor • ECM • Automatic transaxle (clutch, brake or gear etc,)
	Clutch or brake slips or gear is broken	

WIRING DIAGRAM

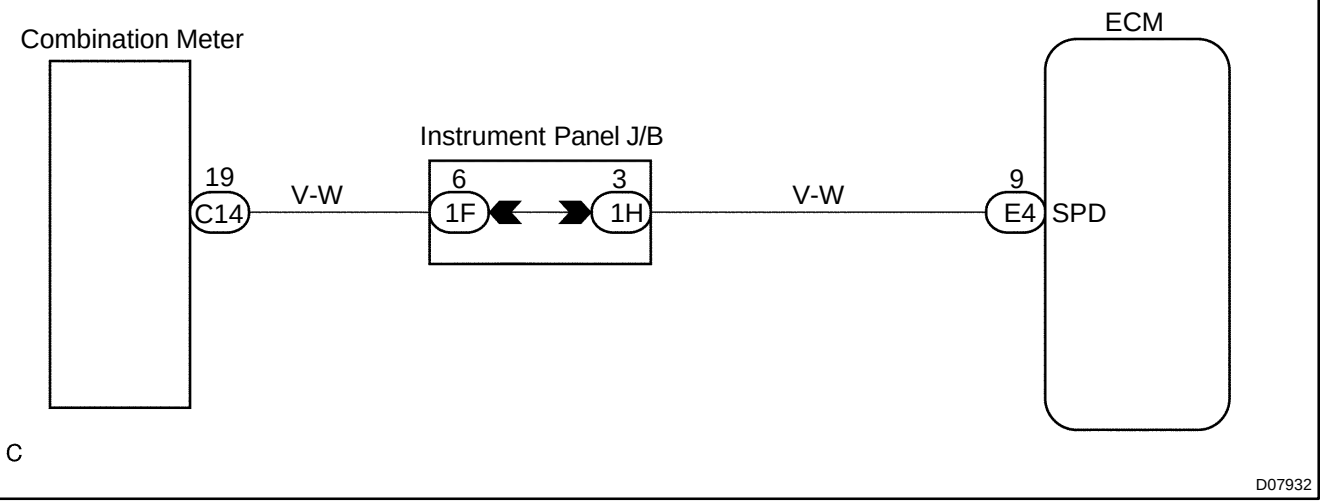

INSPECTION PROCEDURE

1	**Check operation of speedometer.**

HINT:
Read freeze frame data using TOYOTA hand-held tester or OBD II scan tool. Because freeze frame records the engine conditions when the malfunction is detected. When troubleshooting it is useful for determining whether the vehicle was running or stopped, the engine was warmed up or not, the air-fuel ratio was lean or rich, etc. at the time of the malfunction.

CHECK:

Drive the vehicle and check if the operation of the speedometer in the combination meter is normal.
HINT:
The vehicle speed sensor is operating normally if the speedometer display is normal.

NG → **Check speedometer (See page BE-2).**

OK

2	**Check for short in harness and connector between terminal SPD of ECM connector and body ground.**

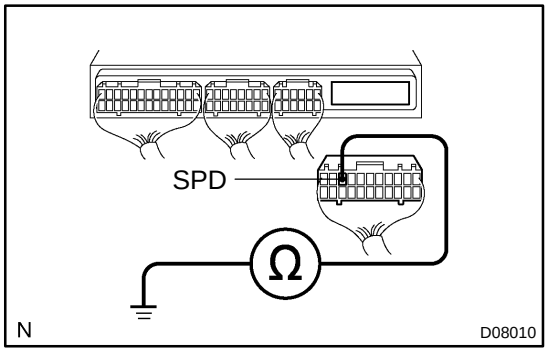

PREPARATION:

Disconnect the connector of the ECM.

CHECK:

Check continuity between terminal SPD of the ECM connector and body ground.

OK:

No continuity (1M Ω or higher)

NG → **Repair or replace harness or connector.**

OK

3	**Check voltage between terminal SPD of ECM connector and body ground.**

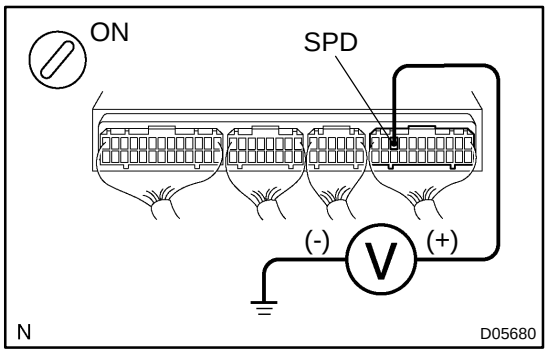

PREPARATION:
Turn ignition switch ON.
CHECK:
Measure voltage between terminal SPD of ECM connector and body ground.
OK:
Voltage: 10 - 14 V

NG → **Check for open in harness and connector between instrument panel J/B and ECM (See page IN-29).**

OK

4	**Check for open in harness and connector between instrument panel J/B and combination meter (See page IN-29).**

NG → **Repair or replace harness or connector.**

5	**Check ECM (See page IN-29).**

NG → **Replace ECM.**

OK

Check and repair transaxle (clutch, brake or gear etc,).

DI6UO-02

DTC	P0710	Transmission Fluid Temperature Sensor Malfunction (ATF Temperature Sensor)

DTC	P0711	Transmission Fluid Temperature Sensor Circuit Range/Performance Problem

CIRCUIT DESCRIPTION

The ATF temperature sensor converts fluid temperature into a resistance value which is input into the ECM.

DTC No.	DTC Detecting Condition	Trouble Area
P0710	Either (a) or (b) is detected for 0.5 sec. or more. (2-trip detection logic) (a) Temperature sensor resistance is less than 79 Ω (b) After the engine has been operating for 15 minutes or more, the resistance at the temp. sensor is more than 156 kΩ	• Open or short in ATF temperature sensor • ATF temperature sensor • ECM
P0711	Both (a) and (b) is detected. (a) After 12 seconds of the engine start, the temp. of the atmosphere and that of the engine coolant is more than -10˚C. (b) After a normal driving for over 20 minutes and 6.2 miles (10 km), the ATF temp. is less than 10˚C.	• Open in ATF temp. sensor circuit • ATF temp. sensor • ECM

WIRING DIAGRAM

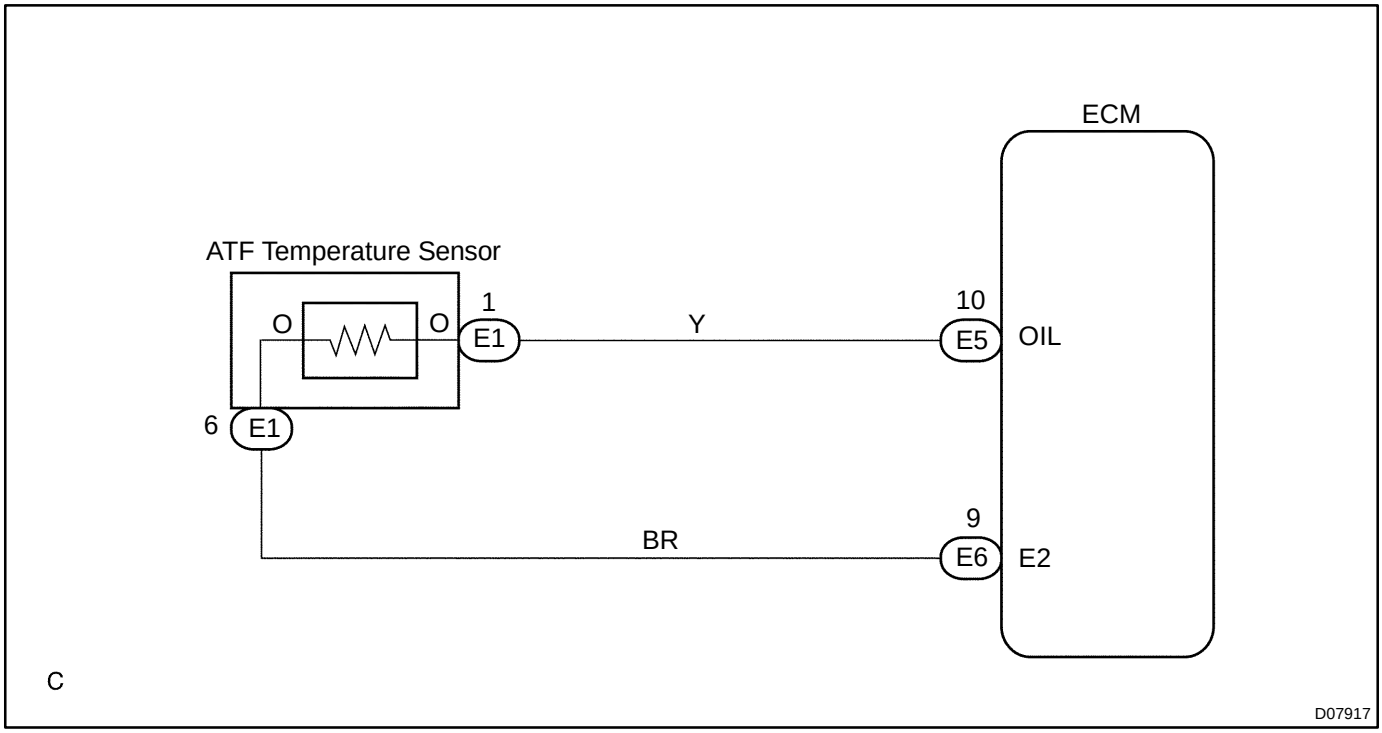

INSPECTION PROCEDURE

1	**Check ATF temperature sensor.**

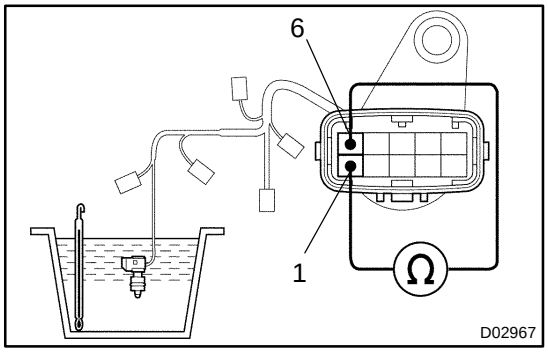

PREPARATION:
Remove the solenoid wiring (See page AX-9).
CHECK:
Measure resistance between terminals of ATF temperature sensor at 25 ˚C (77 ˚F) and 110 ˚C (230 ˚F).
OK:

Resistance (Approx.):
25 ˚C (77 ˚F): 3.5 kΩ
110 ˚C (230 ˚F): 247 Ω

NG → **Replace the solenoid wiring.**

OK

2	**Check harness and connector between solenoid wiring and ECM (See page IN-29).**

NG → **Repair or replace the harness or connector.**

OK

Check and replace the ECM (See page IN-29).

DI6UN-02

DTC	P0750, P0755	Shift Solenoid Valve Malfunction (Shift Solenoid Valve No.1/No.2)

SYSTEM DESCRIPTION

The ECM uses signals from the vehicle speed sensor to detect the actual gear position (1st, 2nd, 3rd or O/D gear).
Then the ECM compares the actual gear with the shift schedule in the ECM memory to detect mechanical trouble of the shift solenoid valves and valve body.

DTC No.	DTC Detecting Condition	Trouble Area
P0750 P0755	During normal driving, the gear required by the ECM does not match the actual gear (2-trip detection logic)	• Shift solenoid valve No. 1/No. 2 is stuck open or closed • Valve body is blocked up or stuck

HINT:
Check the shift solenoid valve No. 1 when DTC P0750 is output and check the shift solenoid valve No. 2 when DTC P0755 is output.

INSPECTION PROCEDURE

1	Check shift solenoid valve No. 1 or No. 2 operation.

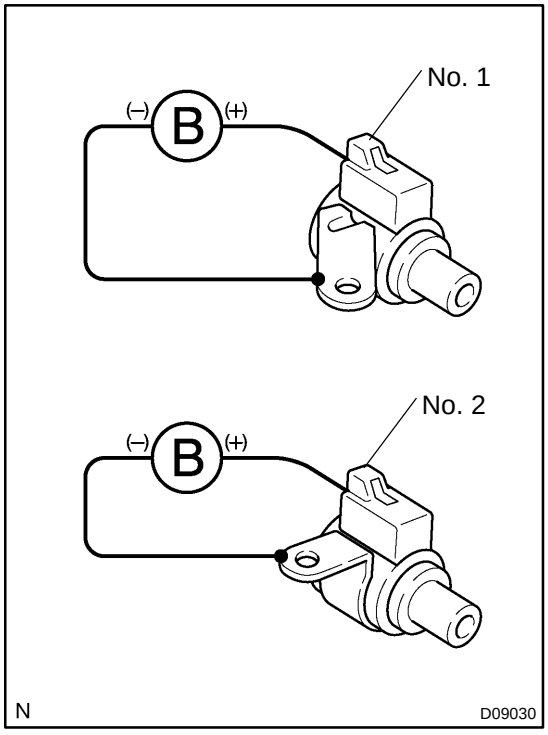

PREPARATION:
(a) Remove the oil pan.
(b) Remove the shift solenoid valve No. 1 or No. 2.

CHECK:
Connect positive ⊕ lead to terminal of solenoid connector, negative ⊖ lead to solenoid body.

OK:

The solenoid makes an operating noise.

NG → **Replace the shift solenoid valve No. 1 or No. 2.**

OK

2	Check the valve body (See page DI-163).

NG → Repair or replace the valve body.

O\K

Repair or replace the transaxle.

DTC	P0753, P0758	Shift Solenoid A/B Electrical Malfunction (Shift Solenoid Valve No.1/No.2)

CIRCUIT DESCRIPTION

Shifting from 1st to O/D is performed in combination with ON and OFF of the shift solenoid valve No. 1 and No. 2 controlled by ECM. If an open or short circuit occurs in either of the solenoid valves, the ECM controls the remaining normal solenoid valve to allow the vehicle to be operated smoothly (Fail safe function).

Range	NORMAL			SHIFT SOLENOID VALVE NO. 1 MALFUNCTIONING			SHIFT SOLENOID VALVE NO. 2 MALFUNCTIONING			BOTH SHIFT SOLENOID VALVES MALFUNCTIONING
	Solenoid valve		Gear	Solenoid valve		Gear	Solenoid valve		Gear	Gear when shift selector is manually operated
	No. 1	No. 2		No. 1	No. 2		No. 1	No. 2		
D	ON	ON	1st	X	OFF	3rd	ON	X	2nd	3rd
	ON	OFF	2nd	X	OFF	3rd	ON	X	2nd	3rd
	OFF	OFF	3rd	X	OFF	3rd	OFF	X	3rd	3rd
	OFF	ON	O/D	X	ON	O/D	OFF	X	3rd	3rd
2	ON	ON	1st	X	OFF	3rd	ON	X	2nd	3rd
	ON	OFF	2nd	X	OFF	3rd	ON	X	2nd	3rd
	OFF	OFF	3rd	X	OFF	3rd	OFF	X	3rd	3rd
L	ON	ON	1st	X	OFF	3rd	ON	X	2nd	3rd
	ON	OFF	2nd	X	OFF	3rd	ON	X	2nd	3rd

X: Malfunctions

HINT:

Check the sift solenoid valve No. 1 when DTC P0753 is output and check the shift solenoid valve No. 2 when DTC P0758 is output.

DTC No.	DTC Detecting Condition	Trouble Area
P0753 P0758	The ECM checks for an open or short circuit in the shift solenoid valve No. 1/No. 2 circuit when it changes. The ECM records DTC P0753 or P0758 if condition (a) or (b) is detected once, but it does not blink the MIL After ECM detects condition (a) or (b) continuously 2 times or more in 1-trip, it causes the MIL to light up until condition (a) or (b) disappears. After that, if the ECM detects condition (a) or (b) once, it starts lighting up MIL again. (a) Solenoid resistance is 8 Ω or less (short circuit) when the solenoid is energized. (b) Solenoid resistance is 100 kΩ or more (open circuit) when the solenoid is not energized.	• Open or short in shift solenoid valve No. 1/No. 2 circuit • Shift solenoid valve No. 1/No. 2 • ECM

Fail safe function:

If either of the solenoid valve circuits develops an open or short, the ECM turns the other solenoid valve ON and OFF to shift to the gear positions shown in the table above. The ECM also turns the shift solenoid valve ST OFF at the same time. If both solenoids malfunction, hydraulic control cannot be performed electronically and must be done manually.

Manual shifting as shown in the above table must be done (In the case of a short circuit, the ECM stops sending current to the short circuited solenoid).

WIRING DIAGRAM

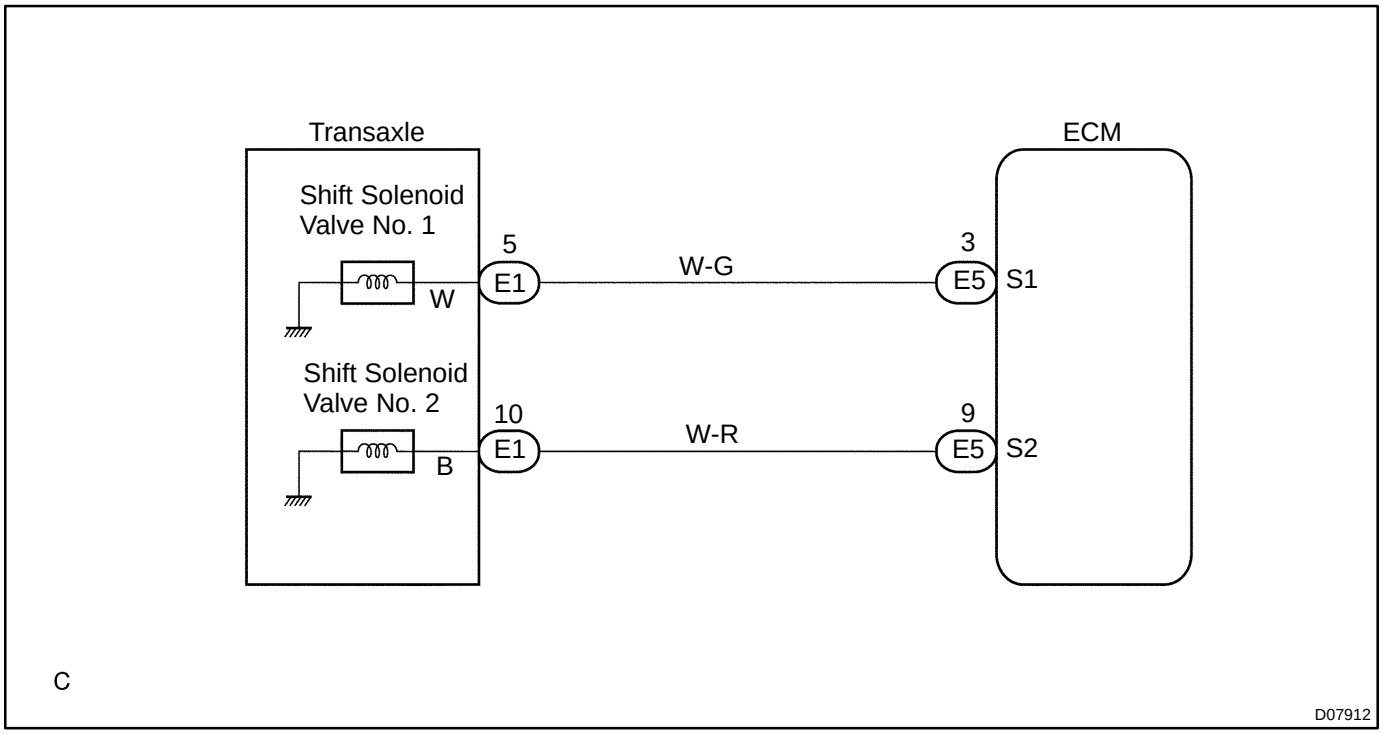

INSPECTION PROCEDURE

1	**Measure resistance between terminal S1 or S2 of ECM and body ground.**

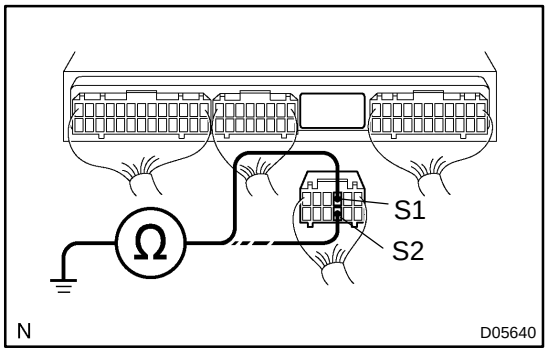

PREPARATION:
Disconnect the connector from ECM.

CHECK:
Measure resistance between terminal S1 or S2 of ECM and body ground.

OK:

Resistance: 11 - 15 Ω at 20 ˚C (68 ˚F)

OK → **Check and replace the ECM (See page IN-29).**

NG

2	Measure harness and connector between ECM and automatic transmission solenoid connector.

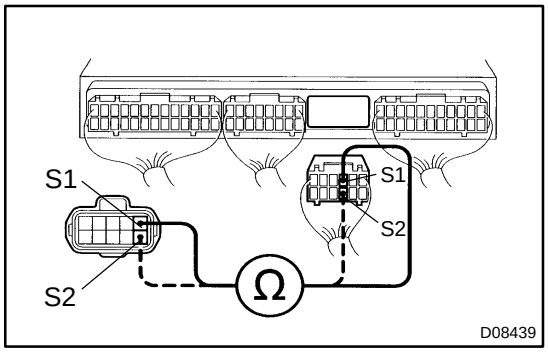

PREPARATION:

Disconnect the solenoid connector from the automatic transaxle.

CHECK:

Measure the harness and connector between terminal S1 or S2 of ECM and terminal S1 or S2 of solenoid connector.

OK:

Resistance: 0 Ω

NG	Repair or replace the harness or connector (See page IN-29).

OK

3	Check connection of the connectors.

NG	Connect the connectors correctly.

OK

4	**Check shift solenoid valve No. 1 or No. 2.**

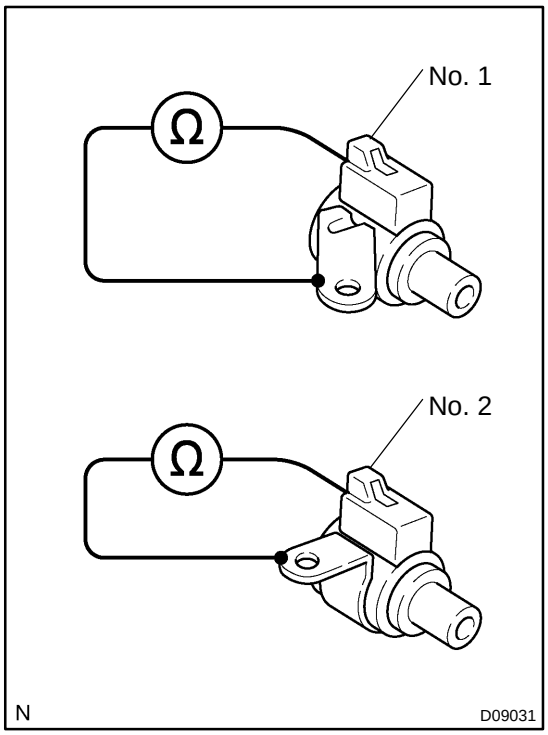

PREPARATION:

(a) Jack up the vehicle.
(b) Remove the oil pan.
(c) Disconnect the solenoid connector.
(d) Remove the shift solenoid valve No. 1 or No. 2.

CHECK:

Measure resistance between solenoid connector and body ground.

OK:

Resistance: 11 - 15 Ω at 20 ˚C (68 ˚F)

NG → **Replace the solenoid valve.**

OK

Repair or replace the solenoid wire.

DI6UL-02

DTC	P0770	Shift Solenoid E Malfunction (Shift Solenoid Valve SL)

SYSTEM DESCRIPTION

The ECM uses the signals from the throttle position sensor, air-flow meter and crankshaft position sensor to monitor the engagement condition of the lock-up clutch.
Then the ECM compares the engagement condition of the lock-up clutch with the lock-up schedule in the ECM memory to detect mechanical trouble of the shift solenoid valve SL, valve body and torque converter clutch or automatic transaxle (clutch, brake or gear etc.).

DTC No.	DTC Detecting Condition	Trouble Area
P0770	• Lock-up does not occur when driving in the lock-up range (normal driving at 80 km/h [50 mph]), or lock-up remains ON in the lock-up OFF range. (2-trip detection logic) • When lock-up is ON, clutch or brake slips or gear is broken. (2-trip detection logic)	• Shift solenoid valve SL is stuck open or closed • Valve body blocked up or stuck • Lock-up clutch • Automatic transaxle (clutch, brake or gear etc.)

INSPECTION PROCEDURE

1	Check solenoid valve SL operation

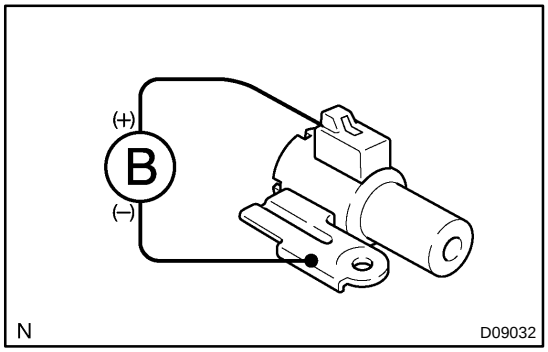

PREPARATION:
(a) Remove the oil pan.
(b) Remove the solenoid valve SL.

CHECK:
(a) Connect positive ⊕ lead to terminal of solenoid connector, negative ⊖ lead to terminal of solenoid connector.
(b) When battery positive voltage is supplied to the shift solenoid valve, check that the solenoid valve moves.

OK:

(a) The solenoid makes an operating noise.
(b) Solenoid valve moves.

NG → **Replace the solenoid valve SL.**

OK

2	Check valve body (See page AX-9).

NG → Repair or replace the valve body.

OK

3	Check the torque converter clutch (See page AX-34).

NG → Repair the torque converter clutch.

OK

Repair the transaxle (See page AX-26).

DI6UK-02

DTC	P0773	Shift Solenoid E Electrical Malfunction (Shift Solenoid Valve SL)

CIRCUIT DESCRIPTION

The shift solenoid valve SL is turned ON and OFF by signals from the ECM to control the hydraulic pressure acting on the lock-up relay valve, which then controls operation of the lock-up clutch.
Fail safe function:
If the ECM detects a malfunction, it turns the shift solenoid valve SL OFF.

DTC No.	DTC Detecting Condition	Trouble Area
P0773	Either (a) or (b) is detected for 1 time. (2-trip detection logic) (a) Solenoid resistance is 8 Ω or less when solenoid is energized. (b) Solenoid resistance is 100 kΩ or more when solenoid is not energized.	• Open or short in shift solenoid valve SL circuit • Shift solenoid valve SL • ECM

WIRING DIAGRAM

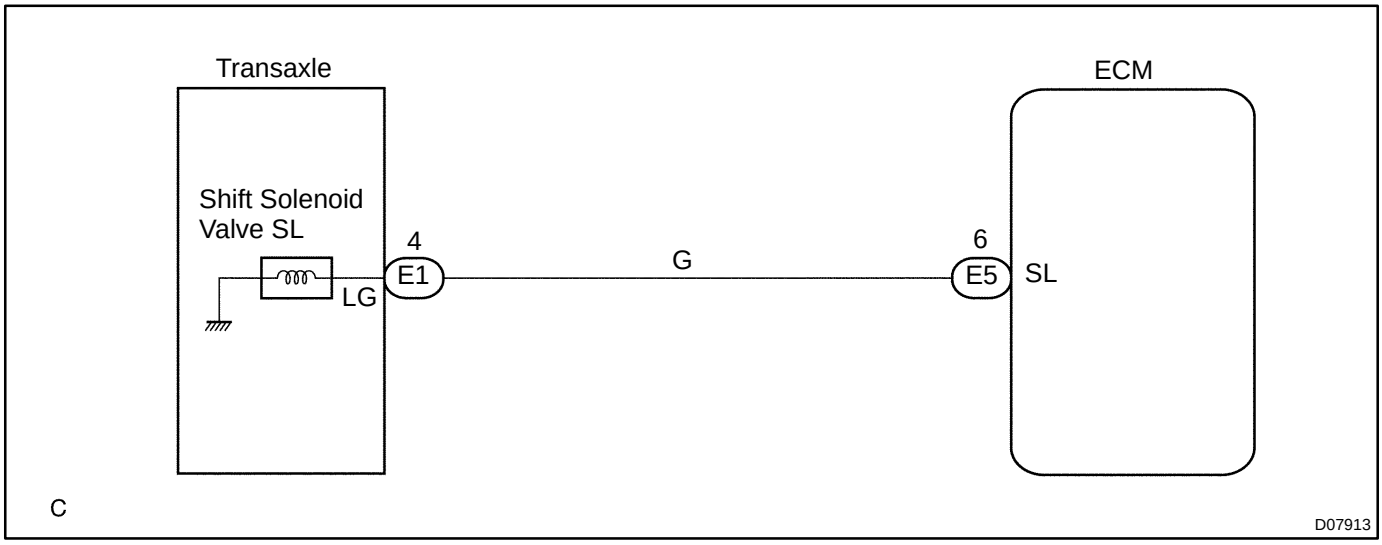

INSPECTION PROCEDURE

1	**Measure resistance between terminal SL of ECM and body ground.**

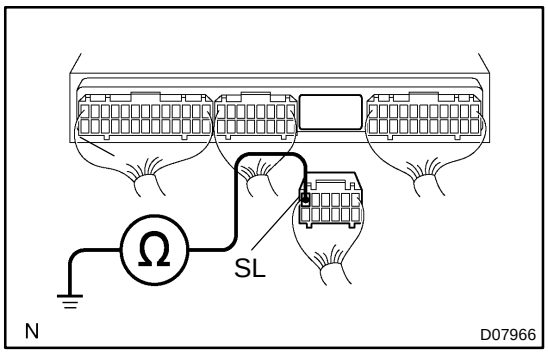

PREPARATION:
Disconnect the connector from ECM.
CHECK:
Measure resistance between terminal SL of ECM and body ground.
OK:
Resistance: 11 - 15 Ω at 20 ˚C (68 ˚F)

OK → **Check and replace the ECM (See page IN-29).**

NG

2	**Measure resistance of harness and connector between ECM and automatic transaxle solenoid connector.**

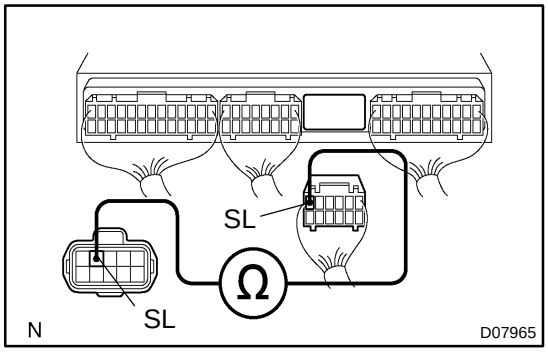

PREPARATION:
Disconnect the solenoid connector from the transaxle.
CHECK:
Measure resistance of the harness and connector between terminal SL of ECM and terminal SL of solenoid connector.
OK:
Resistance: 0 Ω

NG → **Repair or replace the harness or connector.**

OK

3	Check shift solenoid valve SL.

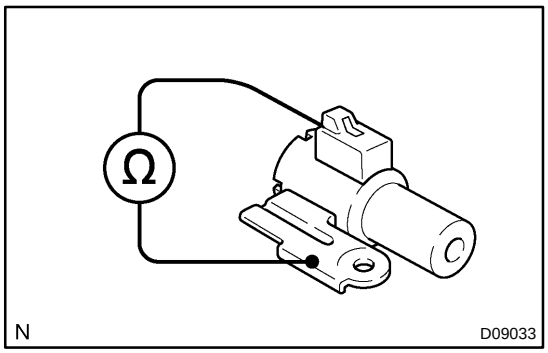

PREPARATION:

(a) Jack up the vehicle.
(b) Remove the oil pan.
(c) Disconnect the shift solenoid valve SL connector.
(d) Remove the shift solenoid valve SL.

CHECK:

Measure resistance between terminal SL of shift solenoid valve and solenoid body.

OK:

Resistance: 11 - 15 Ω at 20 °C (68 °F)

NG → **Replace the shift solenoid valve SL.**

OK

Replace or repair the solenoid wire, harness and connector between ECM and automatic transaxle solenoid connector.

DI6WF-01

CUSTOMER PROBLEM ANALYSIS CHECK

Automatic Transaxle System Check Sheet	Inspector's Name :

Customer's Name		Registration No.	
		Registration Year	/ /
		Frame No.	
Date Vehicle Brought In	/ /	Odometer Reading	km mile

Date Problem Occurred	/ /
How Often Does Problem Occur?	☐ Continuous ☐ Intermittent (times a day)

Symptoms	☐ Vehicle does not move (☐ Any position ☐ Particular position)
	☐ No up-shift (☐ 1st → 2nd ☐ 2nd → 3rd ☐ 3rd → O/D)
	☐ No down-shift (☐ O/D → 3rd ☐ 3rd → 2nd ☐ 2nd → 1st)
	☐ Lock-up malfunction
	☐ Shift point too high or too low
	☐ Harsh engagement (☐ N → D ☐ Lock-up ☐ Any drive position)
	☐ Slip or shudder
	☐ No kick-down
	☐ Others ( )

Check Item	Malfunction Indicator Lamp	☐ Normal ☐ Remains ON

DTC Check	1st Time	☐ Normal code ☐ Malfunction code (DTC)
	2nd Time	☐ Normal code ☐ Malfunction code (DTC)

DI6UC-02

DIAGNOSTIC TROUBLE CODE CHART

If a DTC is displayed during the DTC check, check the circuit listed for that code in the table below and proceed to the page given.

* : -...MIL does not light /●...MIL light up

DTC No. (See Page)	Detection Item	Trouble Area	MIL *	Memory
P0500 (DI-167)	Vehicle Speed Sensor Malfunction	• Open or short in vehicle speed sensor circuit • Vehicle speed sensor • Combination meter • ECM • Automatic transaxle assembly	●	○
P0710 (DI-170)	Transmission Fluid Temperature Sensor Malfunction (ATF Temperature Sensor)	• Open or short in ATF temperature sensor circuit • ATF temperature sensor • ECM	●	○
P0711 (DI-170)	Transmission Fluid Temperature Sensor Circuit Range/Performance Problem	• Open in ATF temperature sensor circuit • ATF temperature sensor • ECM	●	○
P0750 (DI-172)	Shift Solenoid A Malfunction (Shift Solenoid Valve No. 1)	• Shift solenoid valve No. 1 is stuck open or closed • Valve body is blocked up or stuck	●	○
P0753 (DI-174)	Shift Solenoid A Electrical Malfunction (Shift Solenoid Valve No. 1)	• Open or short in shift solenoid valve No. 1 circuit • Shift solenoid valve No. 1 • ECM	●	○
P0755 (DI-172)	Shift Solenoid B Malfunction (Shift Solenoid Valve No. 2)	• Shift solenoid valve No. 2 is stuck open or closed • Valve body is blocked up or stuck	●	○
P0758 (DI-174)	Shift Solenoid B Electrical Malfunction (Shift Solenoid Valve No. 2	• Open or short in shift solenoid valve No. 2 circuit • Shift solenoid valve No. 2 • ECM	●	○
P0770 (DI-178)	Shift Solenoid E Malfunction (Shift Solenoid Valve SL)	• Shift solenoid valve SL is stuck open or closed • Valve body is blocked up or stuck • Lock-up clutch	●	○
P0773 (DI-180)	Shift Solenoid E Electrical Malfunction (Shift Solenoid Valve SL)	• Open or short in shift solenoid valve SL circuit • Shift solenoid valve SL • ECM	●	○
P1520 (DI-183)	Stop Light Switch Circuit	• Open or short in stop light switch circuit • Stop light switch • ECM	●	○
P1725 (DI-184)	NT Revolution Sensor Circuit Malfunction (Input Turbine Speed Sensor)	• Open or short in input turbine speed sensor circuit • Input turbine speed sensor • ECM	●	○
P1760 (DI-186)	Linear Solenoid for Accumulator Pressure Control Circuit Malfunction (Shift Solenoid Valve SLT)	• Open or short in shift solenoid valve SLT circuit • Shift solenoid valve SLT • ECM	●	○
P1780 (DI-189)	Park/Neutral Position Switch Malfunction	• Short in park/neutral position switch circuit • Park/neutral position switch • ECM	●	○
P1790 (DI-193)	ST Solenoid Valve Circuit Malfunction	• Open or short in shift solenoid valve ST circuit • Shift solenoid valve ST • ECM	●	○

AUTOMATIC TRANSAXLE

HOW TO PROCEED WITH TROUBLESHOOTING

DI6TN-01

Items inside ▱ are titles of pages in this manual, with the page number indicated in the bottom portion. See the indicated pages for detailed explanations.

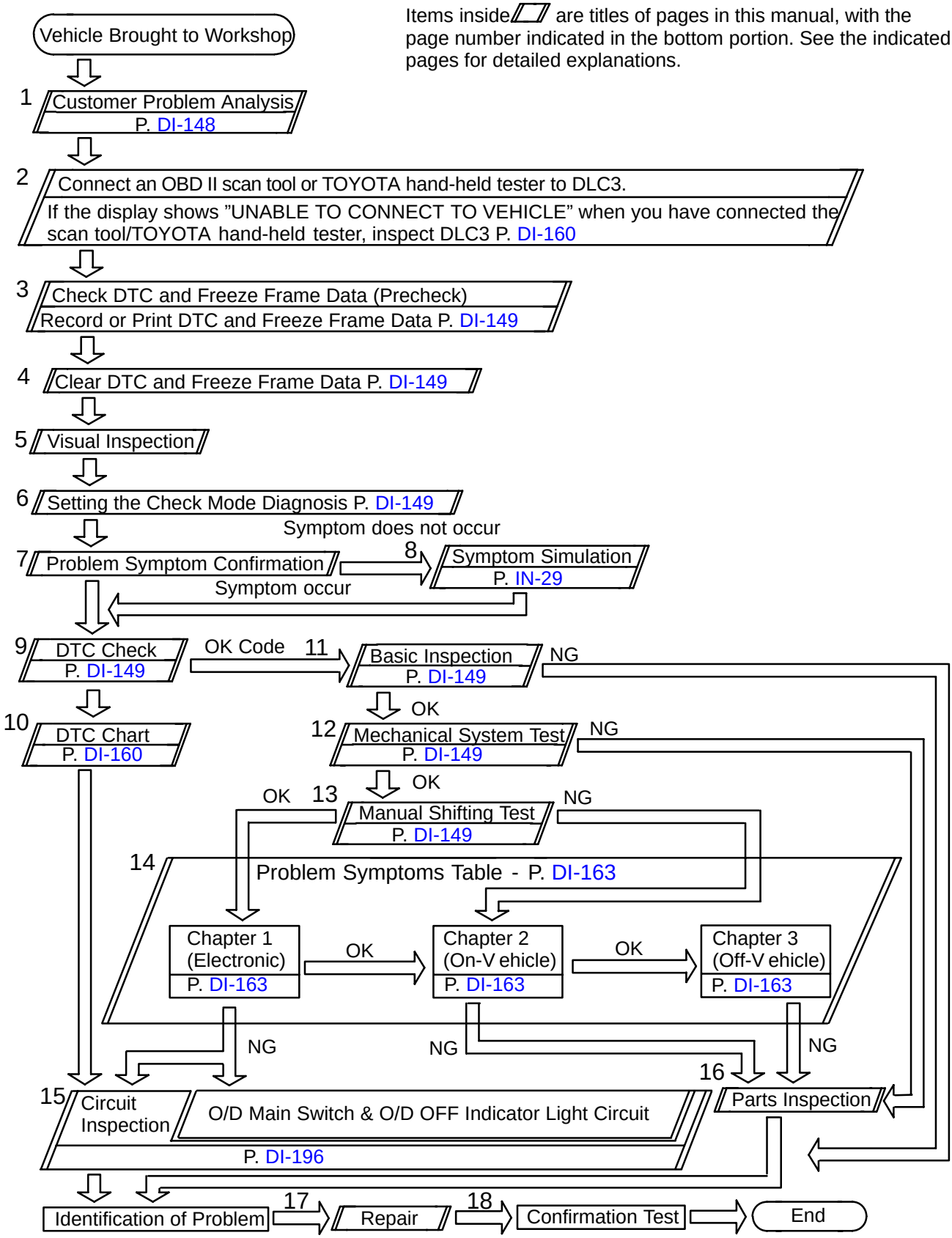

DI6UE-02

O/D Main Switch & O/D OFF Indicator Light Circuit

CIRCUIT DESCRIPTION

The O/D main switch is a momentary type switch. When pressing the O/D main switch, the O/D OFF indicator light lights up and ECM prohibits shifting to O/D, and when pressing it again, the O/D OFF indicator light goes off and ECM allows shifting to O/D. Turning the IG switch OFF will reset the O/D OFF indicator light.

WIRING DIAGRAM

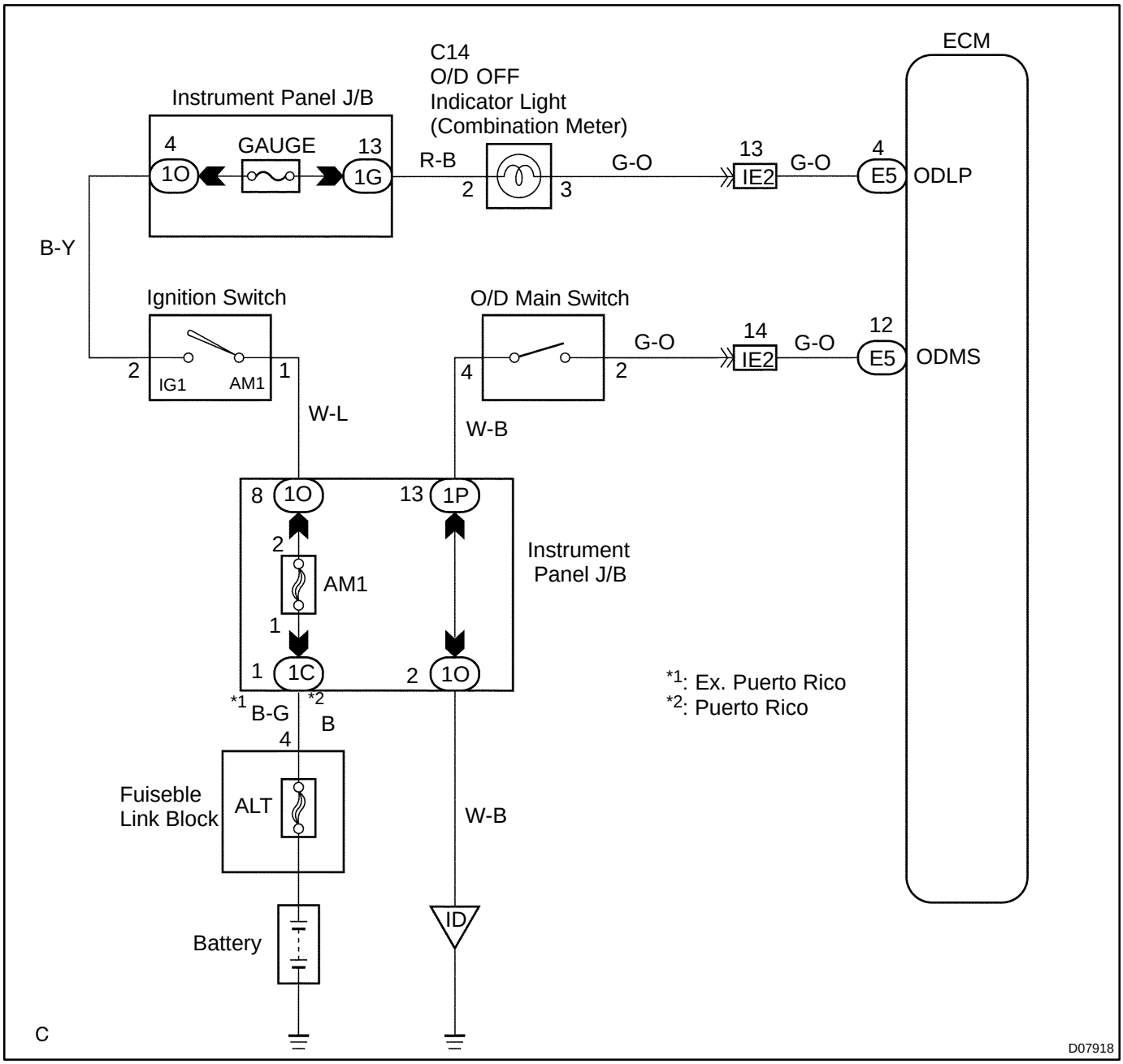

INSPECTION PROCEDURE

1	**Check operation of O/D main switch**

PREPARATION:
Turn the ignition switch ON.
CHECK:
(a) Check O/D OFF indicator light when O/D main switch is pushed in to ON.
(b) Check O/D OFF indicator light when O/D main switch is pushed again.
OK:
(a) O/D OFF indicator light lights up.
(b) O/D OFF indicator light goes off.

OK	**Proceed to next inspection shown on problem symptoms tables (See page DI-163).**

NG

2	**Check and replace the combination meter (See page BE-2).**

NG	**Replace the combination meter.**

OK

3	**Check O/D main switch.**

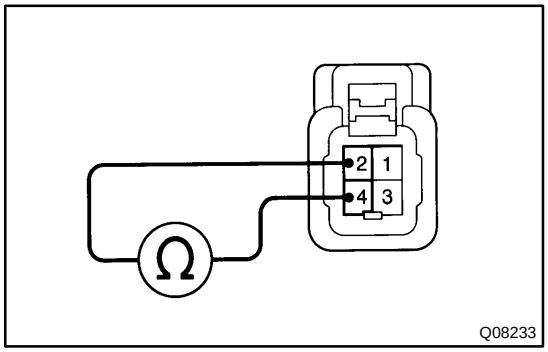

PREPARATION:
Disconnect the O/D main switch connector.
CHECK:
Check continuity between terminals 2 and 4 of O/D main switch connector.
OK:

O/D main switch condition	Specified condition
Press continuously O/D main switch	Continuity
Release O/D main switch	No continuity

NG	**Replace and repair O/D main switch.**

OK

4	Check voltage between terminal ODMS of ECM and body ground.

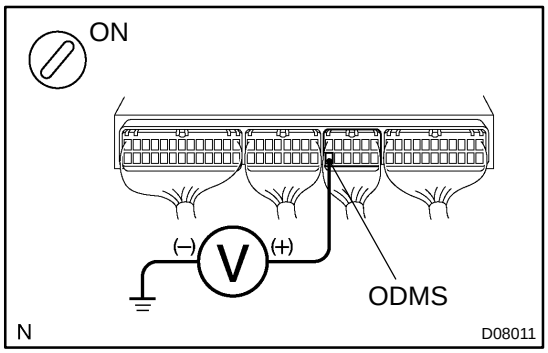

PREPARATION:
Turn the ignition switch ON.
CHECK:
Check voltage between terminal ODMS of ECM and body ground when O/D main switch is ON and OFF.
OK:

O/D main switch	Specified voltage
Press continuously O/D main switch	Below 1.0 V
Release O/D main switch	10 - 14 V

OK → **Check and replace the ECM (See page IN-29).**

NG

5	Check voltage between terminal ODLP of ECM and body ground.

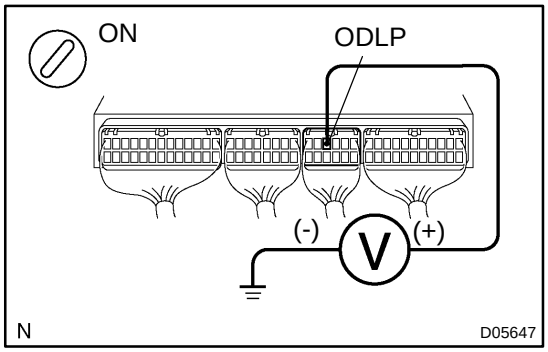

PREPARATION:
(a) Disconnect the connector of ECM.
(b) Turn the ignition switch ON.
CHECK:
Check voltage between terminal ODLP of ECM and body ground.
OK:
Voltage: 7.5 - 14 V

OK → **Check and replace the ECM (See page IN-29).**

NG

Check and replace harness and connector between combination meter and ECM, O/D main switch and ECM, O/D main switch and body ground (See page IN-29).

DI6UR-02

PARTS LOCATION

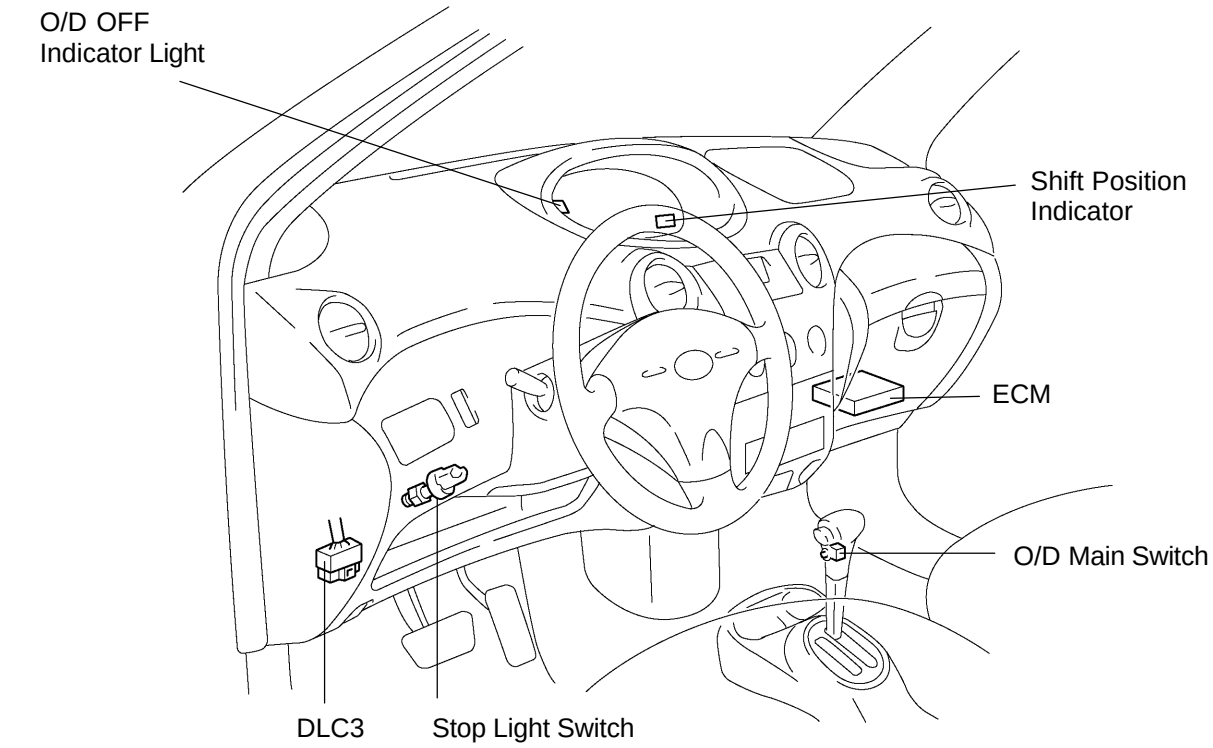

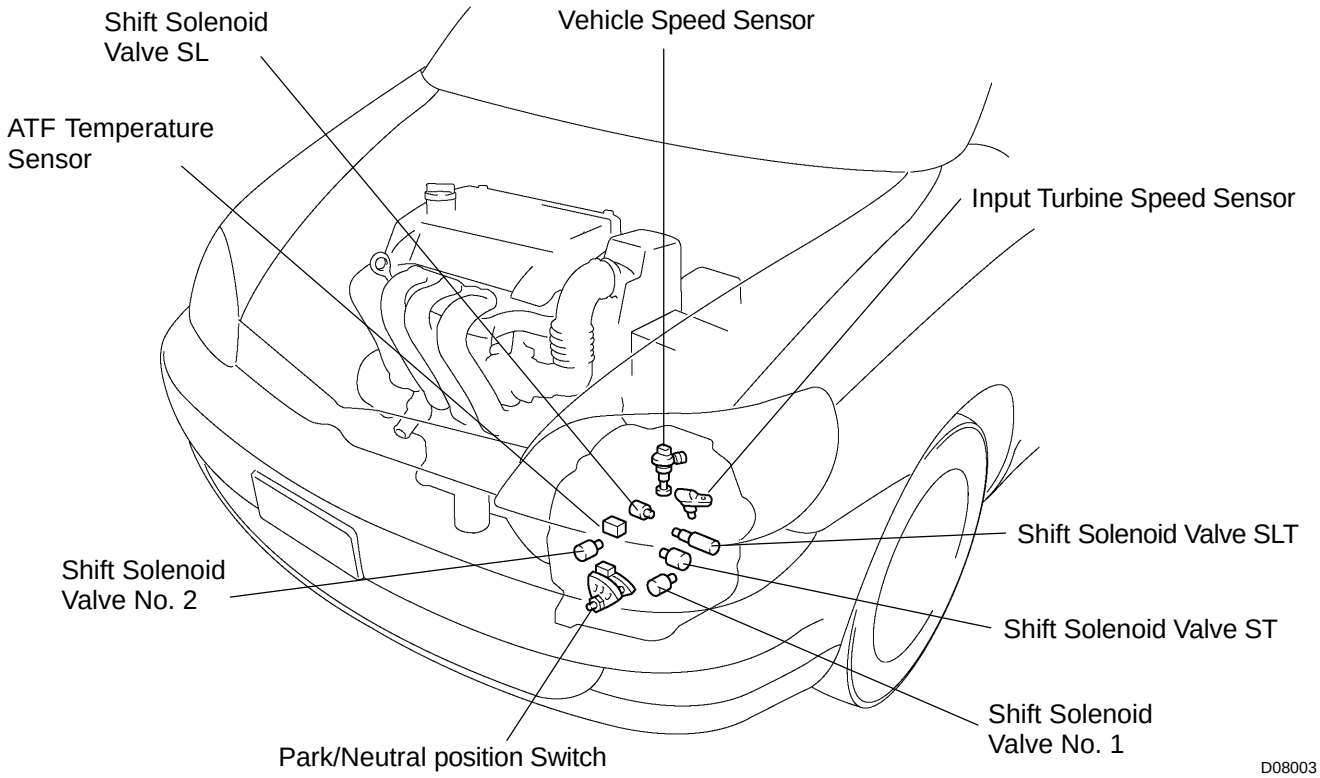

N

D08003

DI6US-02

PRE-CHECK

1. DIAGNOSIS SYSTEM

(a) Description

- When troubleshooting OBD II vehicles, the only difference from the usual troubleshooting procedure is that you connect to the vehicle an OBD II scan tool complying with SAE J1987 or TOYOTA hand-held tester, and read off various data output from the vehicle's ECM.

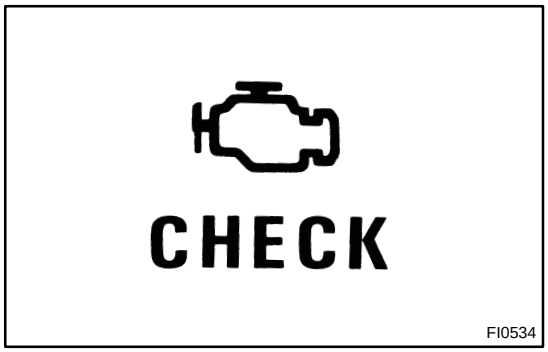

- OBD II regulations require that the vehicle's on-board computer lights up the Malfunction Indicator Lamp (MIL) on the instrument panel when the computer detects a malfunction in the computer itself or in drive system components which affect vehicle emissions. In addition to the MIL lighting up when a malfunction is detected, the applicable DTCs prescribed by SAE J2012 are recorded in the ECM memory (See page DI-14).

If the malfunction only occurs in 3-trips, the MIL goes off but the DTCs remain recorded in the ECM memory.

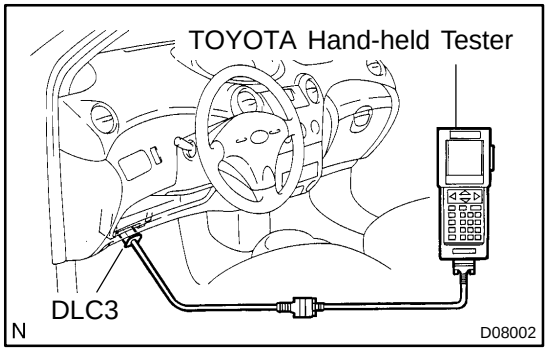

- To check the DTCs, connect an OBD II scan tool or TOYOTA hand-held tester to DLC3 on the vehicle. The OBD II scan tool or TOYOTA hand-held tester also enables you to erase the DTCs and check freeze frame data and various forms of engine data (For instruction book).
- DTCs include SAE controlled codes and Manufacturer controlled codes.
  SAE controlled codes must be set as prescribed by the SAE, while Manufacturer controlled codes can be set freely by the manufacturer within the prescribed limits (See DTC chart on page DI-160).

- The diagnosis system operates in normal mode during normal vehicle use, and also has a check mode for technicians to simulate malfunction symptoms and perform troubleshooting. Most DTCs use 2- trip detection logic (*) to prevent erroneous detection. By switching the ECM to check mode when troubleshooting, the technician can cause the MIL to light up and for a malfunction that is only detected once or momentarily (TOYOTA hand-held tester) (See page DI-149).
- *2-trip detection logic:
  When a logic malfunction is first detected, the malfunction is temporarily stored in the ECM memory.

If the same malfunction is detected again during the 2nd test drive, this 2nd detection causes the MIL to light up .

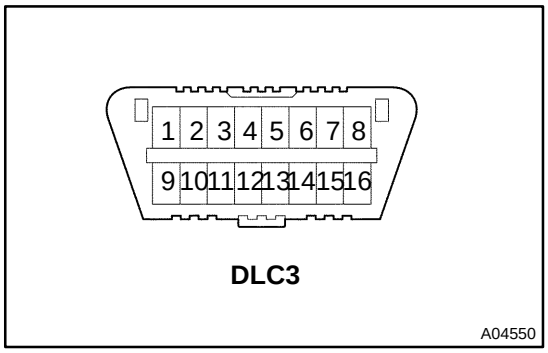

DLC3

(b) Inspect the DLC3.
The vehicle's ECM uses ISO 9141-2 for communication. The terminal arrangement of DLC3 complies with SAE J1962 and matches the ISO 9141-2 format.

Tester connection	Condition	Specified condition
7 (Bus ⊕ Line) - 5 (Signal ground)	During communication	Pulse generation
4 (Chassis Ground) - Body	Always	1 Ω or less
5 (Signal Ground) - Body	Always	1 Ω or less
16 (B^+) - Body	Always	9 - 14 V

HINT:
If your display shows "UNABLE TO CONNECT TO VEHICLE" when you have connected the cable of OBD II scan tool or TOYOTA hand-held tester to DLC3, turned the ignition switch ON and operated the scan tool, there is a problem on the vehicle side or tool side.

- If communication is normal when the tool is connected to another vehicle, inspect DLC3 on the original vehicle.
- If communication is still not possible when the tool is connected connected to another vehicle, the problem is probably in the tool itself, so consult the Service Department listed in the tool's instruction manual.

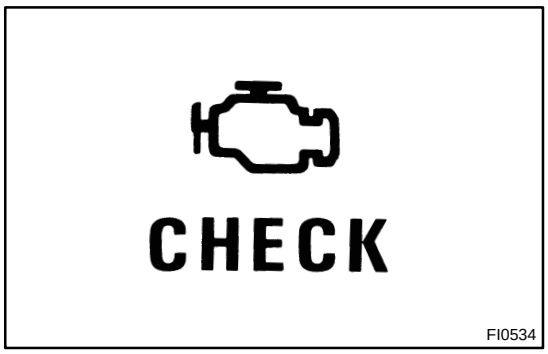

2. INSPECT DIAGNOSIS (NORMAL MODE)

(a) Check the MIL.

(1) The MIL comes on when the ignition switch is turned ON and the engine is not running.

HINT:

If the MIL does not light up, troubleshoot the combination meter (See page BE-2).

(2) When the engine is started, the MIL should go off. If the lamp remains on, the diagnosis system has detected a malfunction or abnormality in the system.

(b) Check the DTC.

NOTICE:

TOYOTA hand-held tester only: When the diagnostic system is switched from normal mode to check mode, it erases all DTCs and freeze frame data recorded in normal mode. So before switching modes, always check the DTCs and freeze frame data, and note them down.

(1) Prepare an OBD II scan tool (complying with SAE J1978) or TOYOTA hand-held tester.

(2) Connect the OBD II scan tool or TOYOTA hand-held tester to DLC3 at the lower of the instrument panel.

(3) Turn the ignition switch ON and turn the OBD II scan tool or TOYOTA hand-held tester switch ON.

(4) Use the OBD II scan tool or TOYOTA hand-held tester to check the DTCs and freeze frame data and note them down (For operating instructions, see the OBD II scan tool's instruction book).

(5) See page DI-160 to confirm the details of the DTCs.

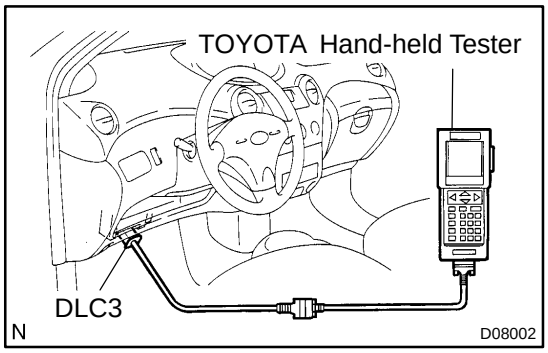

NOTICE:

When simulating symptoms with an OBD II scan tool (excluding TOYOTA hand-held tester) to check the DTCs, use normal mode. For codes on the DTCs chart subject to "2-trip detection logic", turn the ignition switch OFF after the symptoms have been simulated the 1st time. Then repeat the simulation process again. When the program has DTCs are recorded in the ECM.

3. INSPECT DIAGNOSIS (CHECK MODE)

HINT:

TOYOTA hand- held tester only: Compared to the normal mode, the check mode has high sensing ability to detect malfunctions. Furthermore, the same diagnostic items which are detected in Normal mode can also be detected in Check mode.

(a) Check the DTC.

(1) Check the initial conditions.

- Battery positive voltage 11 V or more.
- Throttle valve fully closed.
- Transaxle in P position.
- Air conditioning switched off.

(2) Turn the ignition switch OFF.

(3) Prepare a TOYOTA hand-held tester.

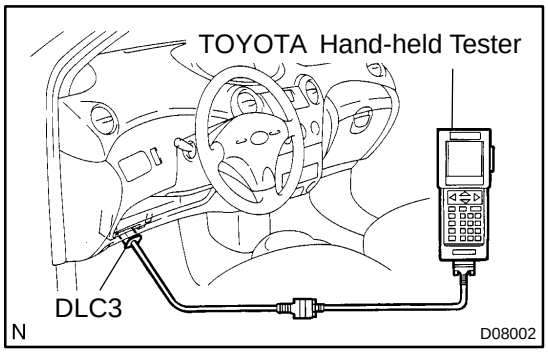

(4) Connect the TOYOTA hand-held tester to DLC3 at the lower of the instrument panel.

(5) Turn the ignition switch ON and switch the TOYOTA hand-held tester ON.

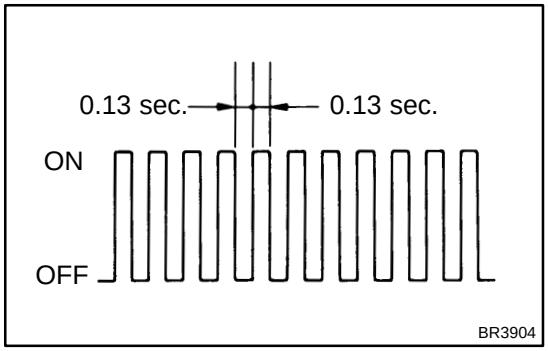

(6) Switch the TOYOTA hand-held tester from Normal mode to Check mode (Check that the MIL flashes).

(7) Start the engine (MIL goes out after the engine starts).

(8) Simulate the conditions of the malfunction described by the customer.

NOTICE:

Leave the ignition switch ON until you have checked the DTCs, etc.

(9) After simulating the malfunction conditions, use the TOYOTA hand-held tester diagnosis selector to check the DTCs and freeze frame data, etc.

HINT:

Take care not to turn the ignition switch OFF, as turning it off the diagnosis system from Check mode to Normal mode, so all DTCs, etc. are erased.

(10) After checking the DTC, inspect the applicable circuit.

(b) Clear the DTC.
The following operation will erase the DTC and freeze frame data. Operating an OBD II scan tool (complying with SAE J1978) or TOYOTA hand-held tester to erase the codes (See the OBD II scan tool's instruction book for operating instructions.).

NOTICE:
If the TOYOTA hand-held tester switches the ECM from Normal mode to Check mode or vice-versa, of if the ignition switch is turned from ON to ACC or OFF during chick mode, the DTCs and freeze frame data will be erased.

4. PROBLEM SYMPTOM CONFIRMATION

Taking into consideration the results of the customer problem analysis, try to reproduce the symptoms of the trouble. If the problem is that the transaxle does not up-shift, down-shift, or the shift point is too high or too low, conduct the following road test to confirm the automatic shift schedule and simulate the problem symptoms.

5. ROAD TEST

NOTICE:

Perform the test at normal operating ATF temperature 50 - 80 ˚C (122 - 176 ˚F).

(a) D position test
Shift into the D position and fully depress the accelerator pedal and check the following points.
(1) Check up-shift operation.
Check to see that 1 → 2, 2 → 3 and 3 → O/D up-shift takes place, and that the shift points conform to the automatic shift schedule (See page SS-30).

HINT:

- O/D Gear Up-shift Prohibition Control (1. Coolant temp. is 60 ˚C (140 ˚F) or less. 2. If there is a 10 km/h (6 mph) difference between the set cruise control speed and vehicle speed.)
- O/D Gear Lock-up Prohibition Control (1. Brake pedal is depressed. 2. Coolant temp. is 60 ˚C (140 ˚F) or less.)

(2) Check for shift shock and slip.
Check for shock and slip at the 1 → 2, 2 → 3 and 3 → O/D up-shifts.
(3) Check for abnormal noises and vibration.
Drive in the D position lock-up or O/D gear and check for abnormal noises and vibration.

HINT:

The check for the cause of abnormal noises and vibration must be done very thoroughly as it could also be due to loss of balance in the differential torque converter clutch, etc.

(4) Check kick-down operation.
While running in the D position, 2nd, 3rd and O/D gears, check to see that the possible kick-down vehicle speed limits for 2 → 1, 3 → 2 and O/D → 3 kick-downs conform to those indicated on the automatic shift schedule (See page SS-30).
(5) Check abnormal shock and slip at kick-down.
(6) Check the lock-up mechanism.
- Drive in D position, O/D gear, at a steady speed (lock-up ON) of about 60 km/h (37 mph).
- Lightly depress the accelerator pedal and check that the engine speed does not change abruptly.

If there is a big jump in engine speed, there is no lock-up.

(b) 2 position test

Shift into the 2 position and fully depress the accelerator pedal and check the following points.

(1) Check up-shift operation.

Check to see that the 1 → 2 up-shift takes place and that the shift point conforms to the automatic shift schedule (See page SS-30).

HINT:

There is no O/D up-shift and lock-up in the 2 position.

(2) Check engine braking.

While running in the 2 position and 2nd gear, release the accelerator pedal and check the engine braking effect.

(3) Check for abnormal noises during acceleration and deceleration, and for shock at up-shift and down-shift.

(c) L position test

Shift into the L position and fully depress the accelerator pedal and check the following points.

(1) Check no up-shift.

While running in the L position, check that there is no up-shift to 2nd gear.

(2) Check engine braking.

While running in the L position, release the accelerator pedal and check the engine braking effect.

(3) Check for abnormal noises during acceleration and deceleration.

(d) R position test

Shift into the R position and fully depress the accelerator pedal and check for slipping.

CAUTION:

Before conducting this test ensure that the test area is free from people and obstruction.

(e) P position test

Stop the vehicle on a grade (more than 5˚) and after shifting into the P position, release the parking brake. Then, check to see that the parking lock pawl holds the vehicle in place.

6. BASIC INSPECTION

(a) Check the fluid level.

HINT:

- Drive the vehicle so that the engine and transaxle are at normal operating temperature.
  Fluid temp.: 70 - 80 ˚C (158 - 176 ˚F)
- Only use the COOL range on the dipstick as a rough reference when the fluid is replaced or the engine does not run.

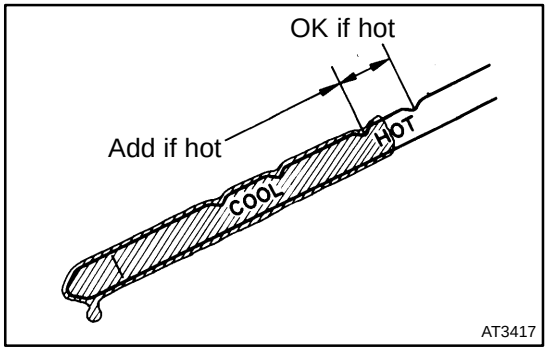

(1) Park the vehicle on a level surface and set the parking brake.

(2) With the engine idling and the brake pedal depressed, shift the shift lever into all positions from P to L position and return to P position.

(3) Pull out the dipstick and wipe it clean.

(4) Push it back fully into the pipe.

(5) Pull it out and check that the fluid level is in the HOT range.

If the level is at the low side, add new fluid.

Fluid type: ATF Type T-IV
Capacity: 2.9 liters (3.1 US qts, 2.6 lmp. qts)

NOTICE:
Do not overfill.

(b) Check the fluid condition.

If the fluid smells burnt or is black, replace it.

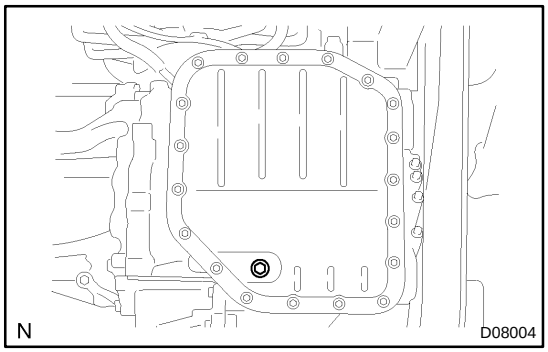

(c) Replace the ATF.
(1) Remove the drain plug and drain the fluid.
(2) Reinstall the drain plug securely.

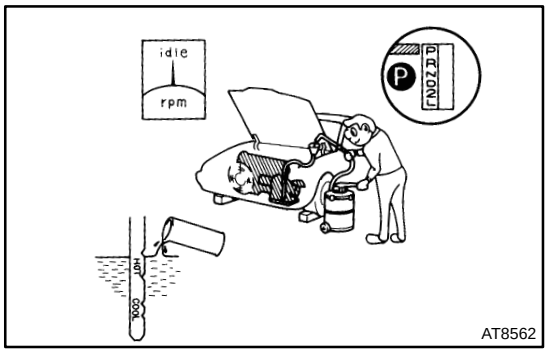

(3) With the engine OFF add new fluid through the oil filler pipe.

Fluid type: ATF Type T-IV
Capacity: 2.9 liters (3.1 US qts, 2.6 lmp. qts)

(4) Start the engine and shift the shift lever into all positions from P to L position and then shift into P position.

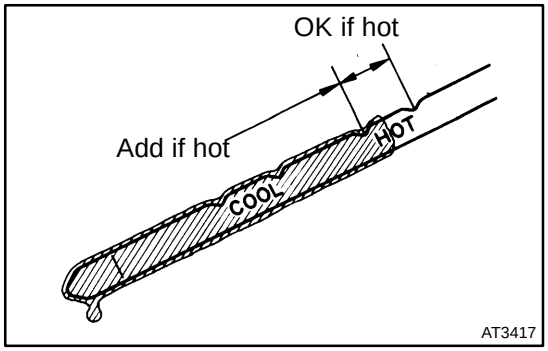

(5) With the engine idling, check the fluid level. Add fluid up to the COOL level on the dipstick.
(6) Check the fluid level at the normal operating temperature, 70 - 80 °C (158 - 176 °F), and add as necessary.

NOTICE:
Do not overfill.

(d) Check the fluid leaks.

Check for leaks in the transaxle.

If there are leaks, it is necessary to repair or replace O-rings, gaskets, oil seals, plugs or other parts.

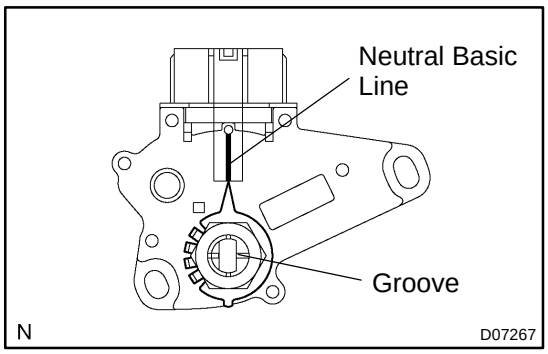

(e) Inspect and adjust the park/neutral position.
Check that the engine can be started with the shift lever only in the N or P position, but not in other positions.

If it is not as stated above, carry out the following adjustment procedures.

(1) Loosen the park/neutral position switch bolt and set the shift lever to the N position.
(2) Align the groove and neutral basic line.
(3) Hold in position and tighten the bolt.

Torque: 5.4 N·m (55 kgf·cm, 48 in·lbf)

For continuity inspection of the park/neutral position switch, see page DI-189 .

(f) Check the idle speed.
Idle speed: 600 ± 50 rpm
(In N position and air conditioner OFF)

7. MECHANICAL SYSTEM TESTS

(a) Measure the stall speed.
The object of this test is to check the overall performance of the transaxle and engine by measuring the stall speeds in the D and R positions.

NOTICE:

- **Do the test at normal operating fluid temperature 50 - 80 ˚C (122 - 176 ˚F).**
- **Do not continuously run this test longer than 10 seconds.**
- **To ensure safety, conduct this test in a wide, clear level area which provides good traction.**
- **The stall test should always be carried out in pairs. One technician should observe the conditions of wheels or wheel stoppers outside the vehicle while the other is doing the test.**

(1) Chock the 4 wheels.
(2) Connect an OBD II scan tool or TOYOTA hand-held tester to DLC3.
(3) Fully apply the parking brake.
(4) Keep your left foot pressed firmly on the brake pedal.
(5) Start the engine.
(6) Shift into the D position. Press all the way down on the accelerator pedal with your right foot. Quickly read the stall speed at this time.

Stall speed: 2,330 ± 200 rpm

(7) Do the same test in R position.

Stall speed: 2,330 ± 200 rpm

Evaluation:

Problem	Possible cause
(a) Stall speed low in D and R positions	• Engine output may be insufficient • Stator one-way clutch is operating properly HINT: If more than 600 rpm below the specified value, the torque converter clutch could be faulty.
(b) Stall speed high in D position	• Line pressure too low • Forward clutch slipping • No.2 one-way clutch not operating properly
(c) Stall speed high in R position	• Line pressure too low • Reverse clutch slipping • 1st & reverse brake slipping
(d) Stall speed high in D and R positions	• Line pressure too low • Improper fluid level

(b) Measure the time lag.

When the shift lever is shifted while the engine is idling, there will be a certain time lapse or lag before the shock can be felt. This is used for checking the condition of the No. 2 one-way clutch, reverse clutch, forward clutch, and 1st & reverse brake.

NOTICE:

- **Do the test at normal operating fluid temperature 50 - 80 ˚C (122 - 176 ˚F).**
- **Be sure to allow 1 minute interval between tests.**
- **Take 3 measurements and take the average value.**

(1) Connect an OBD II scan tool or TOYOTA hand-held tester to DLC3.

(2) Fully apply the parking brake.

(3) Start the engine and check idle speed.

Idle speed: 700 ± 50 rpm (In N position and air conditioner OFF)

(4) Shift the shift lever from N to D position. Using a stop watch, measure the time from when the lever is shifted until the shock is felt.

Time lag: N → D Less than 1.2 seconds

(5) In the same manner, measure the time lag for N → R.

Time lag: N → R Less than 1.5 seconds

Evaluation (If N → D time or N → R time lag is longer than specified):

Problem	Possible cause
N → D time lag is longer	• Line pressure too low • Forward clutch worn • No. 2 one-way clutch not operating
N → R time lag is longer	• Line pressure too low • Reverse clutch worn • 1st & reverse brake worn

8. HYDRAULIC TEST

Measure the line pressure.

NOTICE:

- **Do the test at normal operation fluid temperature 50 - 80 ˚C (122 - 176 ˚F)**
- **The line pressure test should always be carried out in pairs. One technician should observe the conditions of wheels or wheel stoppers outside the vehicle while the other is doing the test.**
- **Be careful to prevent SST's hose from interfering with the exhaust pipe.**

(1) Warm up the ATF.

(2) Remove the test plug on the transaxle case front left side and connect SST (See page AX-26 for the location to connect SST).

SST 09992-00095 (09992-00231, 09992-00271)

(3) Fully apply the parking brake and chock the 4 wheels.

(4) Connect an OBD II scan tool or TOYOTA hand-held tester to DLC3.

(5) Start the engine and check idling speed.

(6) Keep your left foot pressed firmly on the brake pedal and shift into D position.

(7) Measure the line pressure when the engine is idling.

(8) Depress the accelerator pedal all the way down. Quickly read the highest line pressure when engine speed reaches stall speed.

(9) In the same manner, do the test in R position.

Specified line pressure:

Condition	D position kPa (kgf/cm^2, psi)	R position kPa (kgf/cm^2, psi)
Idling	372 - 407 (3.8 - 4.2, 55 - 60)	541 - 636 (5.5 - 6.5, 78 - 92)
Stall	1,107 - 1,225 (11.3 - 12.5, 161 - 178)	1,695 - 1,813 (17.3 - 18.5, 246 - 263)

Evaluation:

Problem	Possible cause
If the measured values at all position are higher	• Shift solenoid valve SLT • Regulator valve defective
If the measured values at all position are lower	• Shift solenoid valve SLT • Regulator valve defective • Oil pump defective
If pressure is low in the D position only	• D position circuit fluid leakage • Forward clutch defective
If pressure is low in the R position only	• R position circuit fluid leakage • Reverse clutch defective • 1st & reverse brake defective

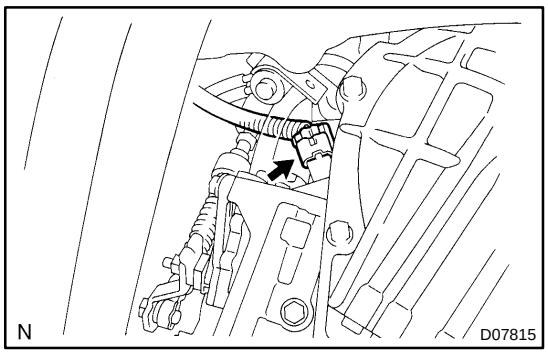

9. MANUAL SHIFTING TEST

HINT:

With this test, it can be determined whether the trouble is within the electrical circuit or is a mechanical problem in the transaxle.

(a) Disconnect the solenoid wire.

(b) Inspect the manual driving operation.

Check that the shift and gear positions correspond with the table below.

While driving, shift through the L, 2 and D positions. Check that the gear change corresponds to the shift position.

Shift Position	Gear Position
D	3rd
2	3rd
L	3rd
R	Reverse
P	Pawl Lock

HINT:

If the L, 2 and D position gear positions are difficult to positions are difficult to distinguish, do the following read test.

If any abnormality is found in the above test, the problem is in the transaxle itself.

(c) Connect the solenoid wire.

(d) Cancel out DTC (See page DI-149).

DI6UQ-01

PROBLEM SYMPTOMS TABLE

HINT:

If a normal code is displayed during the DTC check but the trouble still occurs, check the circuits for each symptom in the order given in the charts on the following pages and proceed to the page given for trouble-shooting.

The Matrix Chart is divided into 3 chapters.

Chapter 1: Electronic circuit matrix chart

Chapter 2: On-vehicle repair matrix chart

Chapter 3: Off-vehicle repair matrix chart

If the instruction ”Proceed to next circuit inspection shown on matrix chart” is given in the flow chart for each circuit, proceed to the circuit with the next highest number in the table to continue the check.

If the trouble still occurs even though there are no abnormalities in any of the other circuits, then check and replace the ECM.

Chapter 1: Electronic Circuit Matrix Chart

Symptom	Suspect Area	See page
No up-shift (A particular gear, from 1st to 3rd gear, is not up-shifted)	ECM	-
No up-shift (3rd → O/D)	2. O/D main switch and O/D OFF indicator light circuit 3. ECM	DI-196 -
No down-shift (A particular gear, from 1st to 3rd gear, is not down-shifted)	ECM	-
No down-shift (O/D → 3rd)	1. O/D main switch and O/D OFF indicator light circuit 2. ECM	DI-196 -
No lock-up	ECM	-
No lock-up OFF	ECM	-
Shift point too high or too low	ECM	-
Up-shift to O/D from 3rd while O/D main switch is OFF	ECM	-
Up-shift to O/D from 3rd while engine is cold	ECM	-
No kick-down	ECM	-
Engine stalls when starting off or stopping	ECM	-

Chapter 2: On-vehicle Repair
(★: U340E, U341E AUTOMATIC TRANSAXLE Repair Manual Pub. No. RM735U)

Symptom	Suspect Area	See page
Vehicle does not move in any forward position and reverse position	1. Manual valve 2. Primary regulator valve 3. Secondary regulator valve 4. Off-vehicle repair matrix chart	★ ★ ★ -
Vehicle does not move in R position	1. Manual valve 2. Off-vehicle repair matrix chart	★ -
No up-shift (1st → 2nd)	1. 1-2 shift valve 2. Off-vehicle repair matrix chart	★ -
No up-shift (2nd → 3rd)	1. 2-3 shift valve 2. Off-vehicle repair matrix chart	★ -
No up-shift (3rd → O/D)	1. 3-4 shift valve 2. Off-vehicle repair matrix chart	★ -
No down-shift (O/D → 3rd)	3-4 shift valve	★
No down-shift (3rd → 2nd)	2-3 shift valve	★
No down-shift (2nd → 1st)	1-2 shift valve	★
No lock-up or No lock-up off	1. Lock-up relay valve 2. Lock-up control valve 3. Solenoid relay valve 4. Solenoid modulator valve 5. Off-vehicle repair matrix chart	★ ★ ★ ★ -
Harsh engagement (N → D)	1. C_1 accumulator 2. Accumulator control valve 3. Off-vehicle repair matrix chart	★ ★ -
Harsh engagement (N → R)	1. C_3 accumulator 2. Accumulator control valve 3. Reverse control valve 4. Off-vehicle repair matrix chart	★ ★ ★ -
Harsh engagement (Lock-up)	1. Lock-up relay valve 2. Accumulator control valve 3. Lock-up control valve 4. Off-vehicle repair matrix chart	★ ★ ★ -
Harsh engagement (1st → 2nd)	1. B_2 accumulator 2. Accumulator control valve	★ ★
Harsh engagement (2nd → 3rd)	1. C_2 accumulator 2. Accumulator control valve	★ ★
Harsh engagement (3rd → O/D)	1. B_1 accumulator 2. Accumulator control valve 3. 3-4 shift timing valve	★ ★ ★
Harsh engagement (O/D → 3)	1. 4-3 shift timing valve 2. 4-3 shift timing valve	★ ★
Harsh engagement (D, 2, L position)	Coat relay valve	★
Slip or shudder (Forward and reverse)	1. Oil strainer 2. Off-vehicle repair matrix chart	AX-9 -
No engine braking (1st: L position)	1. Reverse control valve 2. Off-vehicle repair matrix chart	★ -
No engine braking (2nd: 2 position)	3-4 shift valve	★

No kick-down	1. 1-2 shift valve 2. 2-3 shift valve 3. 3-4 shift valve	★ ★ ★
Poor acceleration	SLT damper	★

Chapter 3: Off-vehicle Repair
(★: U340E, U341E AUTOMATIC TRANSAXLE Repair Manual Pub. No. RM735U)

Symptom	Suspect Area	See page
Vehicle does not move in any forward position and reverse position	1. Planetary gear unit 2. Forward clutch 3. One-way clutch No. 2 4. Reverse Clutch 5. 1st and reverse brake	★ ★ ★ ★ ★
Vehicle does not move in R position	1. Planetary gear unit 2. Reverse Clutch 3. 1st and reverse brake	★ ★ ★
No up-shift (1st → 2nd)	1. 2nd brake 2. One-way clutch No. 1	★ ★
No up-shift (2nd → 3rd)	Direct clutch	★
No up-shift (3rd → O/D)	O/D and 2nd brake	★
No lock-up or No lock-up off	Torque converter clutch	AX-34
Harsh engagement (N → D)	1. Forward clutch 2. One-way clutch No. 2	★ ★
Harsh engagement (N → R)	1. Reverse clutch 2. 1st and reverse brake	★ ★
Harsh engagement (Lock-up)	Torque converter clutch	AX-34
Harsh engagement (1st → 2nd)	1. 2nd brake 2. One-way clutch No. 1	★ ★
Harsh engagement (2nd → 3rd)	Direct clutch	★
Harsh engagement (3rd → O/D)	O/D and 2nd brake	★
Slip or shudder (Forward position)	1. Torque converter clutch 2. Forward clutch 3. Direct clutch 4. O/D and 2nd brake 5. 2nd brake 6. One-way clutch No. 1 7. One-way clutch No. 2	AX-34 ★ ★ ★ ★ ★ ★
Slip or shudder (Reverse position)	1. Reverse clutch 2. 1st and reverse brake	★ ★
Slip or shudder (1st)	One-way clutch No. 2	★
Slip or shudder (2nd)	1. 2nd brake 2. One-way clutch No. 1	★ ★
Slip or shudder (3rd)	Direct clutch	★
Slip or shudder (O/D)	O/D and 2nd brake	★
No engine braking (1st: L position)	1st and reverse brake	★
No engine braking (2nd: 2 position)	O/D and 2nd brake	★
Poor acceleration (All position)	Torque converter clutch	AX-34
Large shift shock or engine stalls when starting off or stopping	Torque converter clutch	AX-34

DI6UD-03

TERMINALS OF ECM

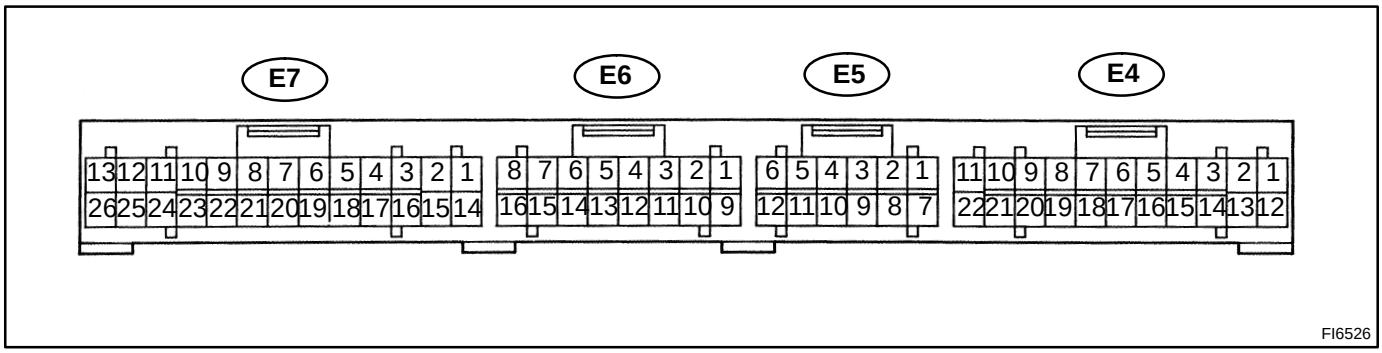

Symbols (Terminals No.)	Wiring Color	Condition	STD Voltage (V)
S1 (E5-3) ↔ E1 (E7-14)	W-G ↔ BR	IG ON	10 - 14
		1st or 2nd gear	10 - 14
		3rd or O/D gear	Below 1
S2 (E5-9) ↔ E1 (E7-14)	W-R ↔ BR	IG ON	Below 1
		1st or 2nd gear	10 - 14
		3rd or O/D gear	Below 1
SL (E5-6) ↔ E1 (E7-14)	G ↔ BR	IG ON	Below 1
		Vehicle driving under lock-up position	10 - 14
NT^+ (E5-5) ↔ NT^- (E5-11)	R ↔ B	Engine is running	Pulse signal is output Below 1 ↔ 4 - 5
SLT^+ (E5-1) ↔ SLT^- (E5-7)	W-L ↔ W	IG ON	10 - 14
ODLP (E5-4) ↔ E1 (E7-14)	G-O ↔ BR	O/D main switch ON	7.5 - 14
		O/D main switch OFF	Below 1
L (E4-19) ↔ E1 (E7-14)	G-W ↔ BR	IG ON and Shift lever L position	10 - 14
		IG ON and Shift lever other than L position	Below 1
2 (E4-18) ↔ E1 (E7-14)	G ↔ BR	IG ON and Shift lever 2 position	10 - 14
		IG ON and Shift lever other than 2 position	Below 1
R (E4-17) ↔ E1 (E7-14)	R-Y ↔ BR	IG ON and Shift lever R position	10 - 14
		IG ON and Shift lever other than R position	Below 1
D (E7-5) ↔ E1 (E7-14)	R-Y ↔ BR	IG ON and Shift lever D position	10 - 14
		IG ON and Shift lever other than D position	Below 1
NSW (E4-22) ↔ E1 (E7-14)	B ↔ BR	IG ON and Shift lever N position	10 - 14
		IG ON and Shift lever other than N position	Below 1
OIL (E5-10) ↔ E2 (E6-9)	Y ↔ BR	IG ON and ATF temperature 110 ˚C (230 ˚F)	Below 1
ST (E5-2) ↔ E1 (E7-14)	B-W ↔ BR	IG ON	Below 1
		IG ON and R gear	10 - 14
SPD (E4-9) ↔ E1 (E7-14)	V-W ↔ BR	IG ON and rotate driving wheel slowly	Pulse generation
ODMS (E5-12) ↔ E1 (E7-14)	G-O ↔ BR	IG ON	Below 1
		IG ON and Press continuously O/D main switch	10 - 14

DI6VL-04

DTC	P1349	VVT System Malfunction

CIRCUIT DESCRIPTION

The VVT system constantly adjusts intake valve timing based upon operating conditions. The ECM controls the Oil Control Valve (OCV) with a variable duty cycle. The Oil Control Valve then supplies oil to the advance or retard side of the VVT Controller. The oil applied to the VVT Controller will cause the intake cam to advance or retard depending on the position of the Oil Control Valve. The ECM verifies that the desired camshaft angle has been achieved by monitoring the camshaft position sensor.

DTC No.	DTC Detecting Condition	Trouble Area
P1349	Condition (a) or (b) continues for after the engine is warmed up and engine speed at 400 ~ 4,000 rpm : (a) Valve timing does not change from of current valve timing (b) Current valve timing is fixed.	• Valve timing • Oil control valve • VVT controller assembly • ECM

WIRING DIAGRAM

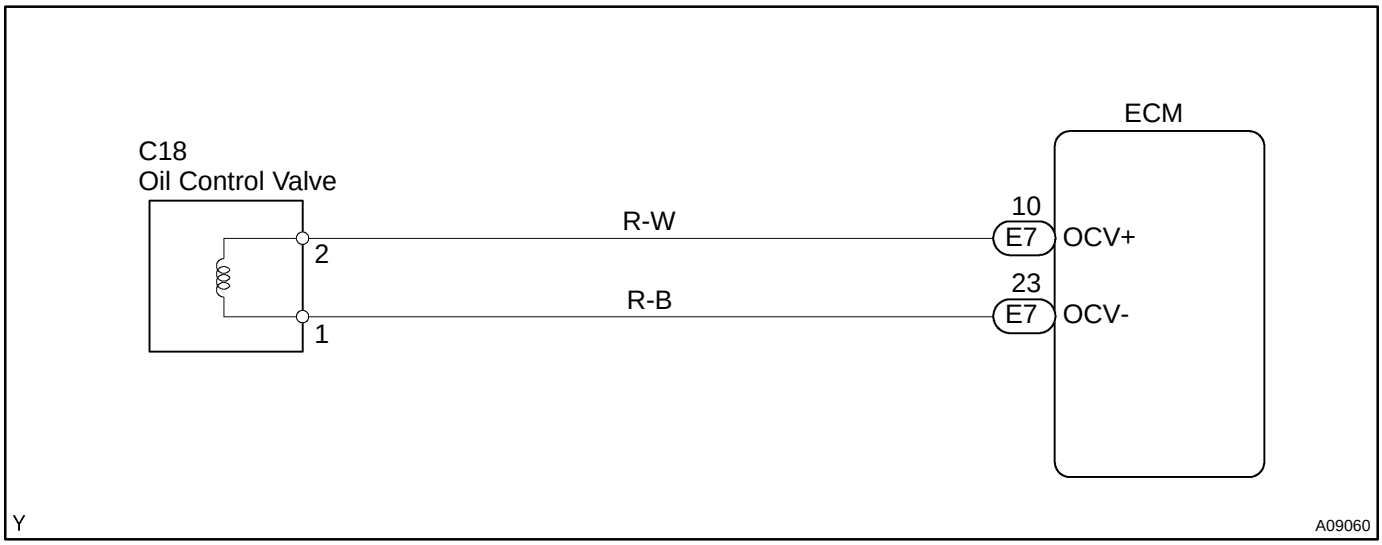

INSPECTION PROCEDURE

HINT:

- If DTC P1349 is displayed, check left bank VVT system circuit.
- Read freeze frame data using TOYOTA hand-held tester or OBD II scan tool. Because freeze frame records the engine conditions when the malfunction is detected, when troubleshooting it is useful for determining whether the vehicle was running or stopped, the engine warmed up or not, the air-fuel ratio lean or rich, etc. at the time of the malfunction.

TOYOTA hand-held tester

1	**Check valve timing (See page EM-20).**

NG → **Repair valve timing.**

OK

2	**Check operation of OCV.**

PREPARATION:

(a) Start the engine and warmed it up.

(b) Connect the TOYOTA hand-held tester and select VVT from ACTIVE TEST menu.

CHECK:

Check the engine speed when operate the OCV by the TOYOTA hand-held tester.

OK:

OCV is OFF: Normal engine speed

OCV is ON: Rough idle or engine stall

OK → **VVT system is OK.***

*: DTC P1349 is also output after the foreign object is caught in some part of the system in the engine oil and the system returns to normal in a short time. As ECM controls so that foreign objects are ejected, there is no problem about VVT. There is also no problem since the oil filter should get the foreign object in the engine oil.

NG

3	**Check voltage between terminals OCV+ and OCV- of ECM connector.**

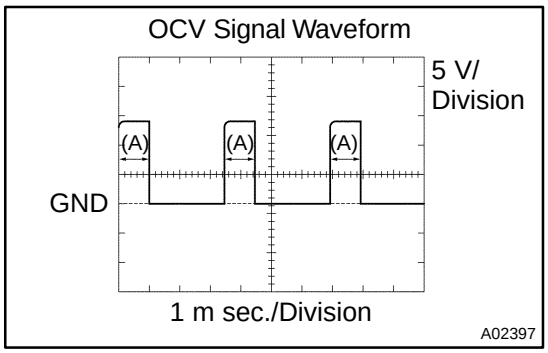

Reference: INSPECTION USING OSCILLOSCOPE

Turn the ignition switch ON, check waveform between terminals OCV+ and OCV- of the ECM connector.

HINT:

- The correct waveform is as shown.
- The waveform frequency (A) is lengthened as the engine speed becomes higher.

NG → **Check and replace ECM (See page IN-29).**

OK

4	**Check VVT controller assembly (See page EM-32).**

NG → **Replace VVT controller assembly, and then go to step 5.**

OK

5	**Check oil control valve (See page SF-45).**

NG → **Replace oil control valve, and then go to step 6.**

OK

6	**Check blockage of oil control valve, oil check valve and oil pipe No.1.**

NG → **Repair or replace.**

OK

7	**Check whether or not DTC P1349 is stored.**

PREPARATION:

(a) Clear the DTC (See page DI-3).

(b) Perform simulation test.

CHECK:

Check whether or not DTC P1349 is stored (See page DI-3).

OK:

DTC P1349 is not stored

OK → **VVT system is OK.***

*: DTC P1349 is also output after the foreign object is caught in some part of the system in the engine oil and the system returns to normal in a short time. As ECM controls so that foreign objects are ejected, there is no problem about VVT. There is also no problem since the oil filter should get the foreign object in the engine oil.

NG

Replace ECM (See page IN-29).

OBD II scan tool (excluding TOYOTA hand-held tester)

1	**Check valve timing (See page EM-20).**

NG → **Repair valve timing.**

OK

2	Check operation of OCV.

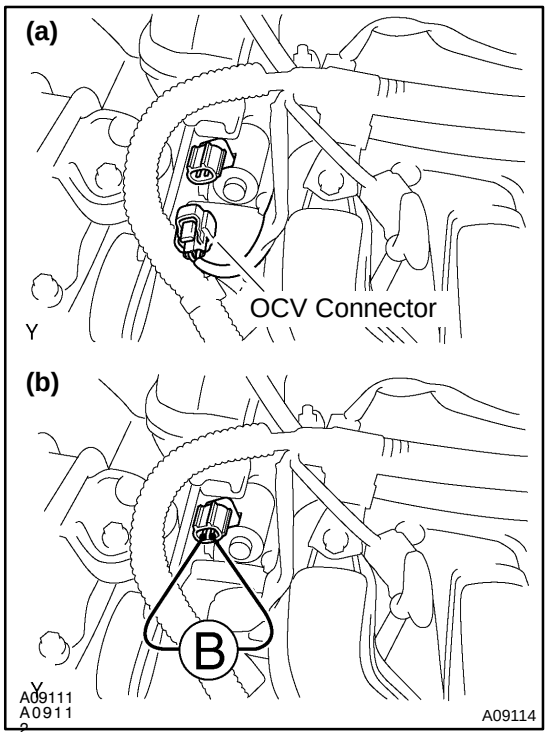

PREPARATION:

Start the engine.

CHECK:

(a) Check the engine speed when disconnect the OCV connector.

(b) Check the engine speed when apply battery positive voltage between terminals of OCV.

RESULT:

Result	Check (a)	Check (b)
1	Normal engine speed	Rough idle or engine stall
2	Except 1	

2	Go to step 4.

1

3	**Check voltage between terminals OCV+ and OCV- of ECM connector.**

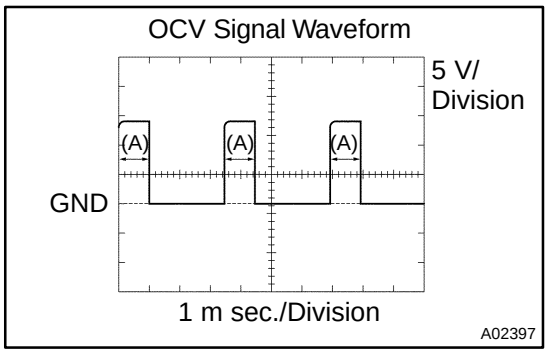

Reference: INSPECTION USING OSCILLOSCOPE

Turn the ignition switch ON, check waveform between terminals OCV+ and OCV- of the ECM connector.

HINT:

- The correct waveform is as shown.
- The waveform frequency (A) is lengthened as the engine speed becomes higher.

OK	**VVT system is OK.***

*: DTC P1349 is also output after the foreign object is caught in some part of the system in the engine oil and the system returns to normal in a short time. As ECM controls so that foreign objects are ejected, there is no problem about VVT. There is also no problem since the oil filter should get the foreign object in the engine oil.

NG

Check and replace ECM (See page IN-29).

4	**Check VVT controller assembly (See page EM-32).**

NG	**Replace VVT controller assembly, and then go to step 5.**

OK

5	**Check oil control valve (See page SF-45).**

NG	**Replace oil control valve, and then go to step 6.**

OK

6	**Check blockage of oil control valve, oil check valve and oil pipe No.1.**

NG → **Repair or replace.**

OK

7	**Check whether or not DTC P1349 is stored.**

PREPARATION:

(a) Clear the DTC (See page DI-3).

(b) Perform simulation test.

CHECK:

Check whether or not DTC P1349 is stored (See page DI-3).

OK:

DTC P1349 is not stored

OK → **VVT system is OK.***

*: DTC P1349 is also output after the foreign object is caught in some part of the system in the engine oil and the system returns to normal in a short time. As ECM controls so that foreign objects are ejected, there is no problem about VVT. There is also no problem since the oil filter should get the foreign object in the engine oil.

NG

Check and replace ECM (See page IN-29).

DI6VI-04

DTC	P1300	Igniter Circuit Malfunction (No.1)

DTC	P1305	Igniter Circuit Malfunction (No.2)

DTC	P1310	Igniter Circuit Malfunction (No.3)

DTC	P1315	Igniter Circuit Malfunction (No.4)

CIRCUIT DESCRIPTION

A DIS (Direct Ignition System) has been adopted. The DIS improves the ignition timing accuracy, reduces high-voltage loss, and enhances the the overall reliability of the ignition system by eliminating the distributor. The DIS is a 1-cylinder ignition system which ignites one cylinder with one ignition coil. In the 1-cylinder ignition system, the one spark plug is connected to the end of the secondary winding. High voltage generated in the secondary winding is applied directly to the spark plug. The spark of the spark plug pass from the center elecrtode to the ground electrode.

The ECM determines ignition timing and outputs the ignition signals (IGT) for each cylinder. Based on IGT signals, the power transistors in the igniter cuts off the current to the primary coil in the ignition coil is supplied to the spark plug that are connected to the end of the secondary coil. At the same time, the igniter also sends an ignition confirmation signal (IGF) as a fail-safe measure to the ECM.

DTC No.	DTC Detecting Condition	Trouble Area
P1300 P1305 P1310 P1315	No IGF signal to ECM while engine is running	• Ignition system • Open or short in IGF1 and IGT1 - 4 circuit from ignition coil with igniter • No.1 - No.4 ignition coil with igniter • ECM

WIRING DIAGRAM

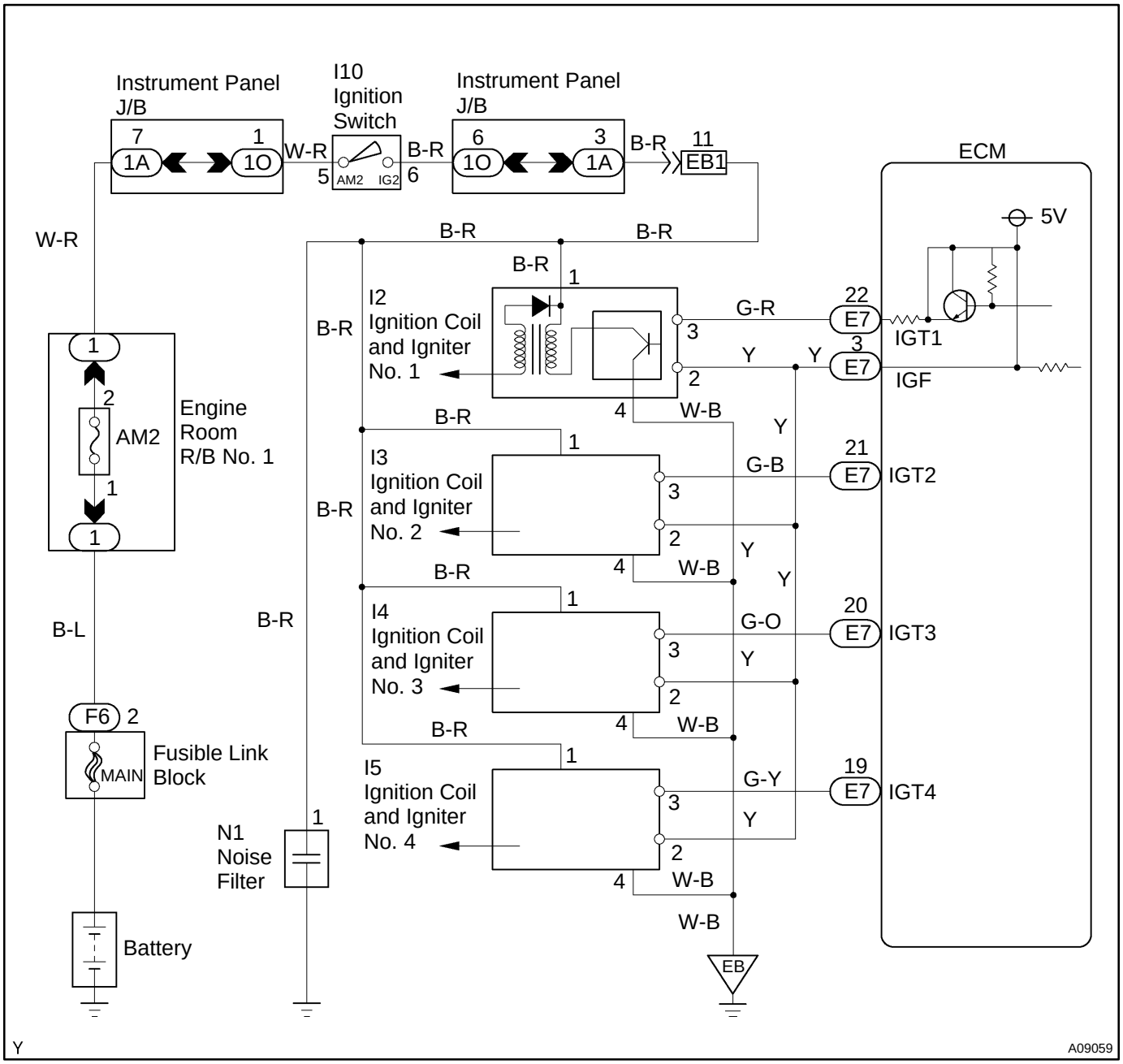

INSPECTION PROCEDURE

HINT:

- If DTC P1300 is displayed, check No.1 ignition coil with igniter circuit.
- If DTC P1305 is displayed, check No.2 ignition coil with igniter circuit.
- If DTC P1310 is displayed, check No.3 ignition coil with igniter circuit.
- If DTC P1315 is displayed, check No.4 ignition coil with igniter circuit.
- Read freeze frame data using TOYOTA hand-held tester or OBD II scan tool. Because freeze frame records the engine conditions when the malfunction is detected, when troubleshooting it is useful for determining whether the vehicle was running or stopped, the engine warmed up or not, the air-fuel ratio lean or rich, etc. at the time of the malfunction.

1	**Check spark plug and spark (See page DI-63).**

NG → **Go to step 4.**

OK

2	**Check for open and short in harness and connector in IGF and IGT signal circuit between ECM and ignition coil with igniter (See page IN-29).**

NG → **Repair or replace harness or connector.**

OK

3	**Disconnect ignition coil with igniter connector and check voltage between terminals IGF of ECM connector and body ground.**

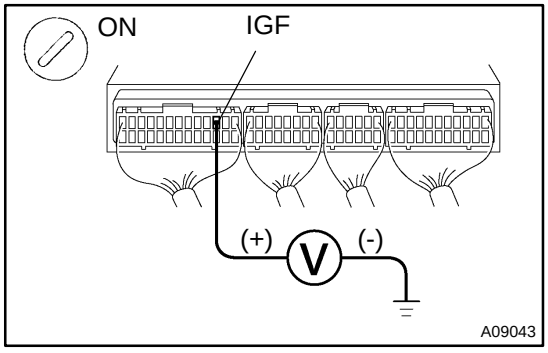

PREPARATION:

(a) Remove the connector cover from the ECM.
(b) Disconnect the ignition coil with igniter connector.
(c) Turn the ignition switch ON.

CHECK:

Measure voltage between terminals IGF of the ECM connector and body ground.

OK:

Voltage: 4.5 - 5.5 V

OK → **Replace ignition coil with igniter.**

NG

Check and replace ECM (See page IN-29).

4	**Check for open and short in harness and connector in IGT signal circuit between ECM and ignition coil with igniter (See page IN-29).**

NG → **Repair or replace harness or connector.**

OK

5	**Check voltage between terminals IGT1 - 4 of ECM connector and body ground.**

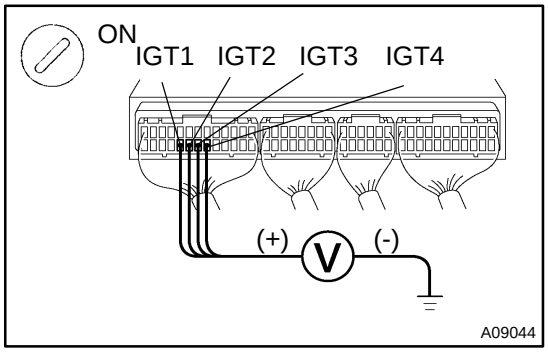

PREPARATION:
Remove the connector cover from the ECM.
CHECK:
Measure voltage between terminals IGT1 - 4 of the ECM connector and body ground when engine is cranked.
OK:
Voltage: More than 0.1 V and less than 4.5 V

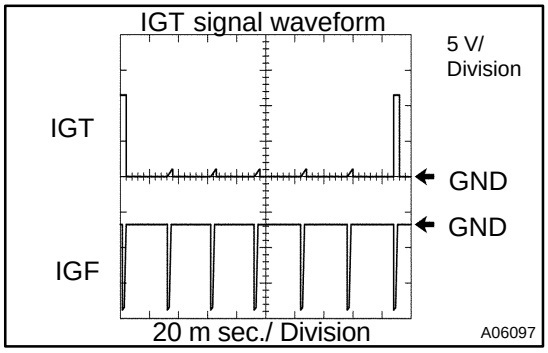

Reference: INSPECTION USING OSCILLOSCOPE
During cranking or idling, check waveform between terminals IGT1 - 4 and E1 of the ECM connector.
HINT:
Correct waveform appears as sohwn, with rectangle waves.

NG → **Check and replace ECM (See page IN-29).**

OK

6	**Disconnect ignition coil with igniter connector and check voltage between terminals IGT1 - 4 of ECM connector and body ground.**

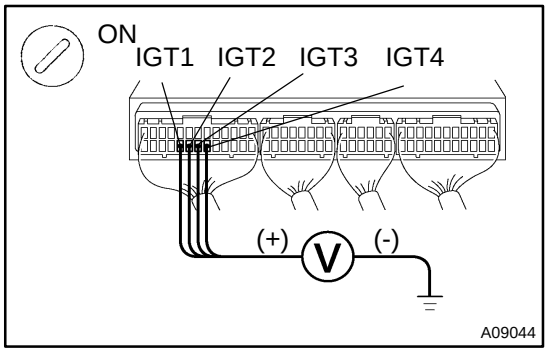

PREPARATION:

(a) Remove the connector cover from the ECM.

(b) Disconnect the ignition coil with igniter connector.

CHECK:

Measure voltage between terminals IGT1 - 4 of the ECM connector and body ground when engine is cranked.

OK:

Voltage: More than 0.1 V and less than 4.5 V

NG → **Check and replace ECM (See page IN-29).**

OK

7	**Check ignition coil with igniter power source circuit.**

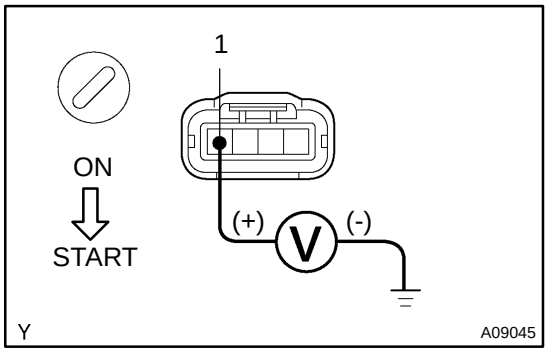

PREPARATION:

Disconnect the ignition coil with igniter connector.

CHECK:

Measure voltage between terminal 1 of ignition coil with igniter connector and body ground, when ignition switch is turned to "ON" and "START" position.

OK:

Voltage: 9 - 14 V

NG → **Repair ignition coil with igniter power source-circuit.**

OK

8	**Check for open and short in harness and connector between ignition switch and ignition coil with igniter (See page IN-29).**

NG → **Repair or replace harness or connector.**

OK

9	Check EFI main relay (Marking: EFI) (See page SF-47).

NG → Replace EFI main relay (marking: EFI).

OK →

Replace ignition coil with igniter.

DI6VJ-02

DTC	P1345	VVT Sensor/Camshaft Position Sensor Circuit Malfunction

CIRCUIT DESCRIPTION

VVT sensor (VVT signal) consist of a signal plate and pickup coil.
The VVT signal plate has 1 tooth on its outer circumference and is mounted on the intake camshafts.
When the camshafts rotate, the protrusion on the signal plate and the air gap on the pickup coil change, causing fluctuations in the magnetic field and generating an electromotive force in the pickup coil.
The actual camshaft angle is detected by the VVT sensor and it provides feedback to the ECM to control the intake valve timing in response to during condition.

DTC No.	DTC Detecting Condition	Trouble Area
P13450	No VVT sensor signal to ECM during cranking at 4 sec. or more	• Open or short in VVT sensor circuit • VVT sensor • ECM
	No VVT sensor signal to ECM with 5 sec. or more engine speed 600 rpm or more	
	While the crankshaft rotates twice, VVT sensor signal will be input to ECM 5 times	

WIRING DIAGRAM

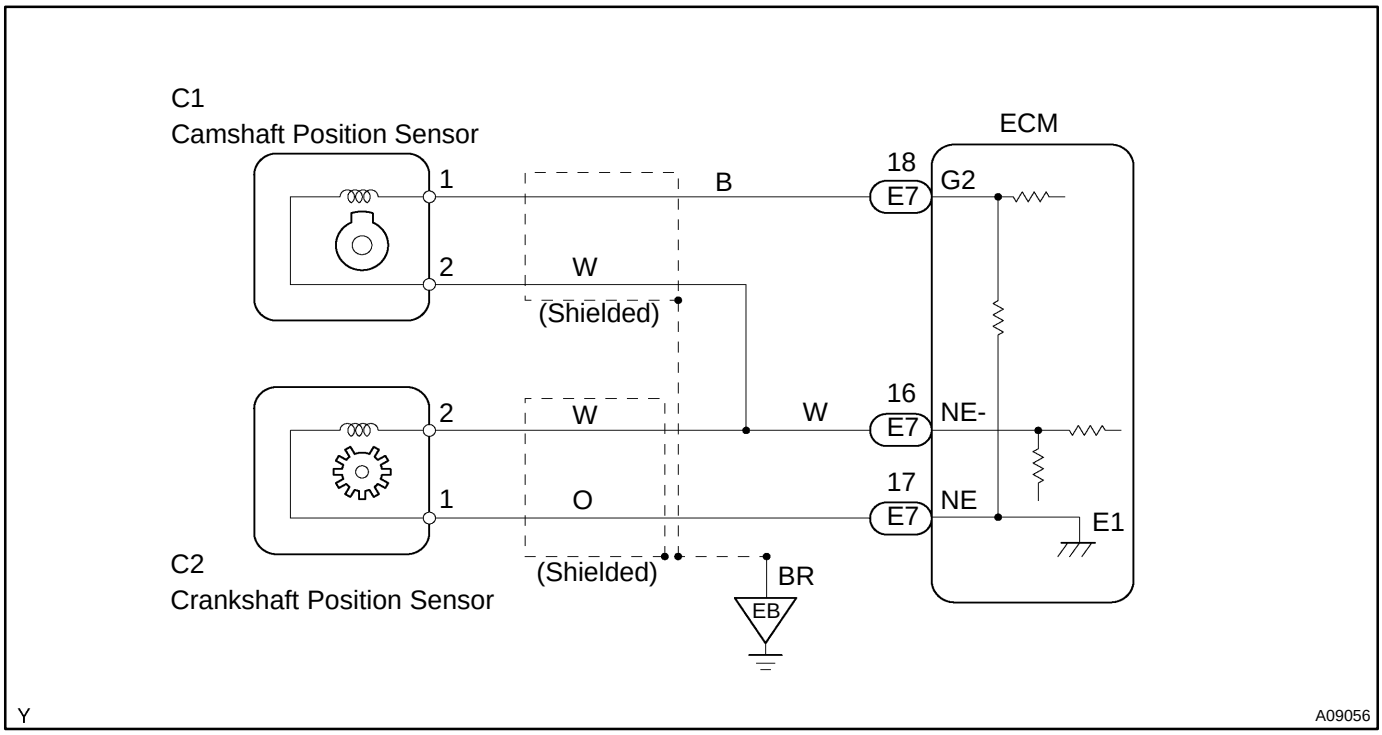

INSPECTION PROCEDURE

HINT:

Read freeze frame data using TOYOTA hand-held tester or OBD II scan tool. Because freeze frame records the engine conditions when the malfunction is detected. When troubleshooting, it is useful for determining whether the vehicle was running or stopped, the engine was warmed up or not, the air-fuel ratio was lean or rich, etc. at the time of the malfunction.

1	**Check resistance of VVT sensor (See page IG-1).**

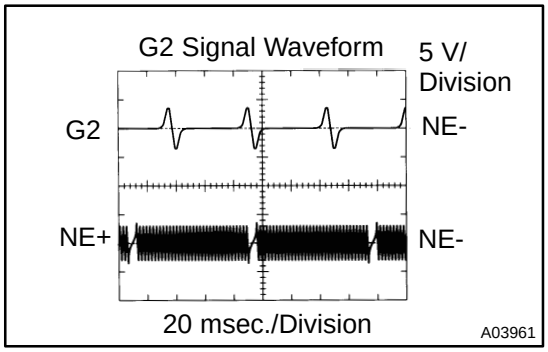

Reference: INSPECTION USING OSCILLOSCOPE

During cranking or idling, check between terminals G2 and NE-, and NE+ and NE- of the ECM connector.

HINT:

- The correct waveform is as shown.
- The waveform frequency is shortened as the engine speed becomes higher.

NG → **Replace VVT sensor.**

OK

2	**Check for open and short in harness and connector between ECM and VVT sensor (See page IN-29).**

NG → **Repair or replace harness or connector.**

OK

3	**Inspect sensor installation.**

NG → **Tighten sensor.**

OK

Check and replace ECM (See page IN-29).

DI6VK-01

DTC	P1346	VVT Sensor (Camshaft Position Sensor) Circuit Range/Performance Problem

CIRCUIT DESCRIPTION

Refer to DTC P1345 (VVT Sensor (Camshaft Position Sensor) Circuit Malfunction) on page DI-1 19.

DTC No.	Detection Item	Trouble Area
P1346	Deviation in crankshaft position sensor signal and VVT sensor (bank 1) signal (2 trip detection logic)	• Mechanical system malfunction (Skipping teeth of timing belt, belt stretched) • ECM

WIRING DIAGRAM

Refer to DTC P1345 (VVT Sensor (Camshaft Position Sensor) Circuit Malfunction) on page DI-1 19 for the WIRING DIAGRAM.

INSPECTION PROCEDURE

HINT:

Read freeze frame data using TOYOTA hand-held tester or OBD II scan tool. Because freeze frame records the engine conditions when the malfunction is detected, when troubleshooting it is useful for determining whether the vehicle was running or stopped, the engine warmed up or not, the air-fuel ratio lean or rich, etc. at the time of the malfunction.

1	**Check valve timing (Check for loose and jumping teeth of timing chain) (See page EM-15).**

NG → **Adjust valve timing (Repair or replace timing chain).**

OK

Check and replace ECM (See page IN-29).

DTC	P1520	Stop Light Switch Signal Malfunction (Only for A/T)

CIRCUIT DESCRIPTION

This signal is used to detect when the brakes have been applied. The STP signal voltage is the same as the voltage supplied to the stop lights.
The STP signal is used mainly to control the fuel cut-off engine speed (The fuel cut-off engine speed is reduced slightly when the vehicle is braking.).

DTC No.	DTC Detecting Condition	Trouble Area
P1520	The stop light switch does not turn off even once the vehicle is driven (2 trip detection logic)	• Short in stop light switch signal circuit • Stop light switch • ECM

WIRING DIAGRAM

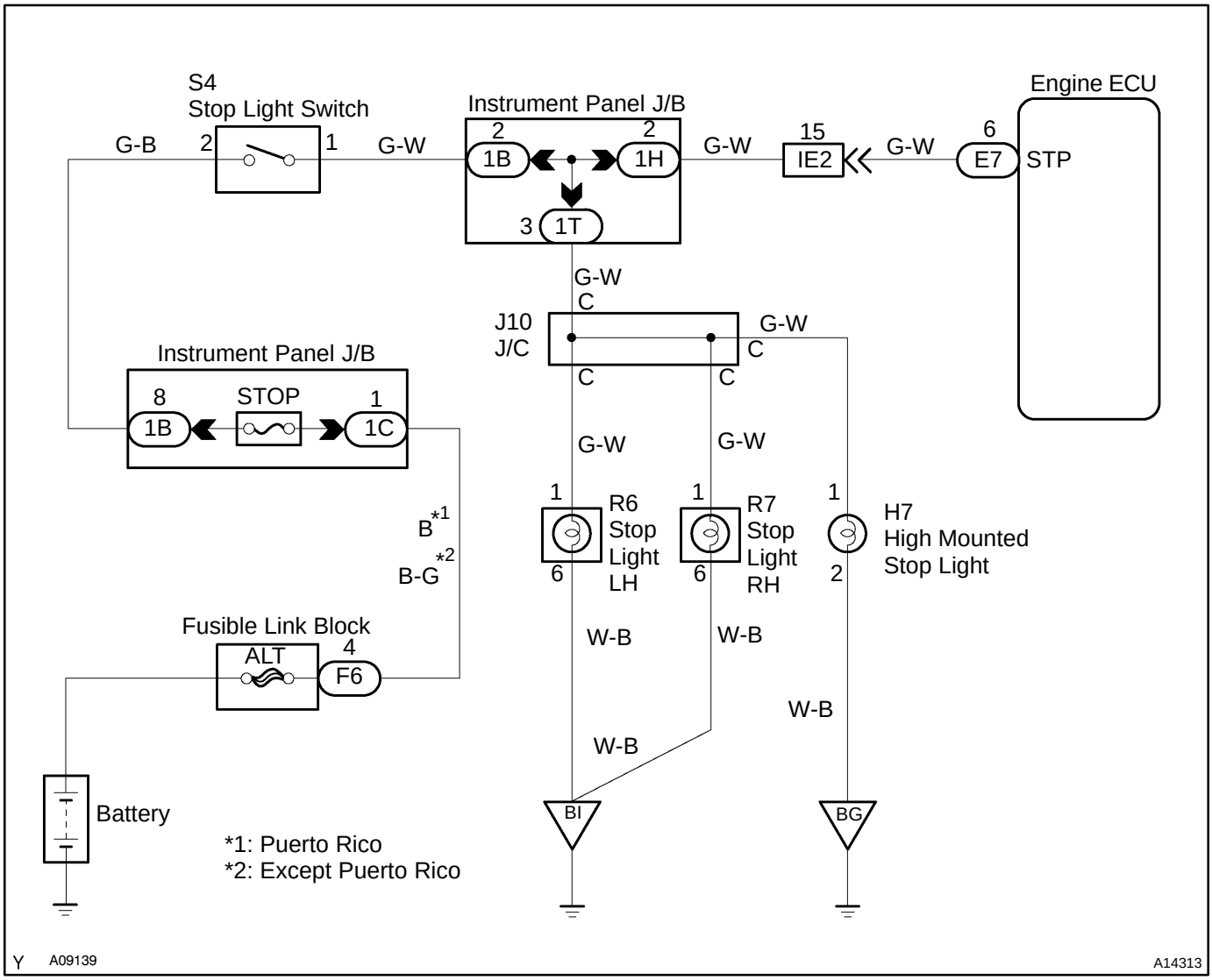

INSPECTION PROCEDURE

HINT:
Read freeze frame data using TOYOTA hand-held tester or OBD II scan tool. Because freeze frame records the engine conditions when the malfunction is detected, when troubleshooting it is useful for determining whether the vehicle was running or stopped, the engine warmed up or not, the air-fuel ratio lean or rich, etc. at the time of the malfunction.

1	**Check operation of stop light.**

PREPARATION:
Check if the stop lights go on and off normally when the brake pedal is operated and released.

NG → **Check and repair stop light circuit (See page BE-37).**

OK ↓

2	**Check STP signal.**

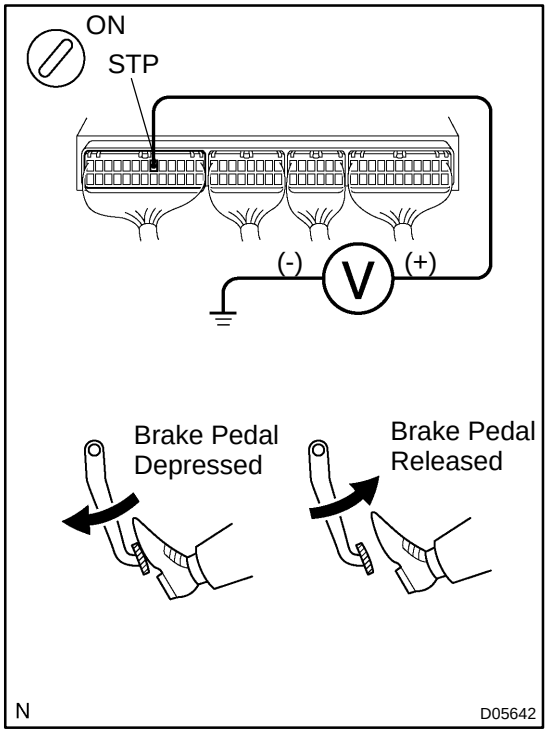

When using TOYOTA hand-held tester:

PREPARATION:

(a) Connect the to the DLC3.

(b) Turn the ignition switch ON and TOYOTA hand-held tester main switch ON.

CHECK:

Read the STP signal on the TOYOTA hand-held tester.

OK:

Brake pedal is depressed: STP ... ON
Brake pedal is released: STP ... OFF

When not using TOYOTA hand-held tester:

PREPARATION:

(a) Remove the connector cover from the ECM.

(b) Turn the ignition switch ON.

CHECK:

Check voltage between terminal STP of ECM and body ground.

OK:

Brake pedal	Voltage
Depressed	7.5 - 14 V
Released	Below 1.5 V

OK → **Check for intermittent problems (See page DI-3).**

NG ↓

3	**Check harness and connector between ECM and stop light switch (See page IN-29).**

NG → **Repair or replace harness or connector.**

OK

Check and replace ECM (See page IN-29).

DI6VN-04

DTC	P1600	ECM BATT Malfunction

CIRCUIT DESCRIPTION

Battery positive voltage is supplied to terminal BATT of the ECM even when the ignition switch is OFF for use by the DTC memory and air-fuel ratio adaptive control value memory, etc.

DTC No.	DTC Detecting Condition	Trouble Area
P1600	Open in back up power source circuit	• Open in back up power source circuit • ECM

HINT:
If DTC P1600 appear, the ECM does not store another DTC.

WIRING DIAGRAM

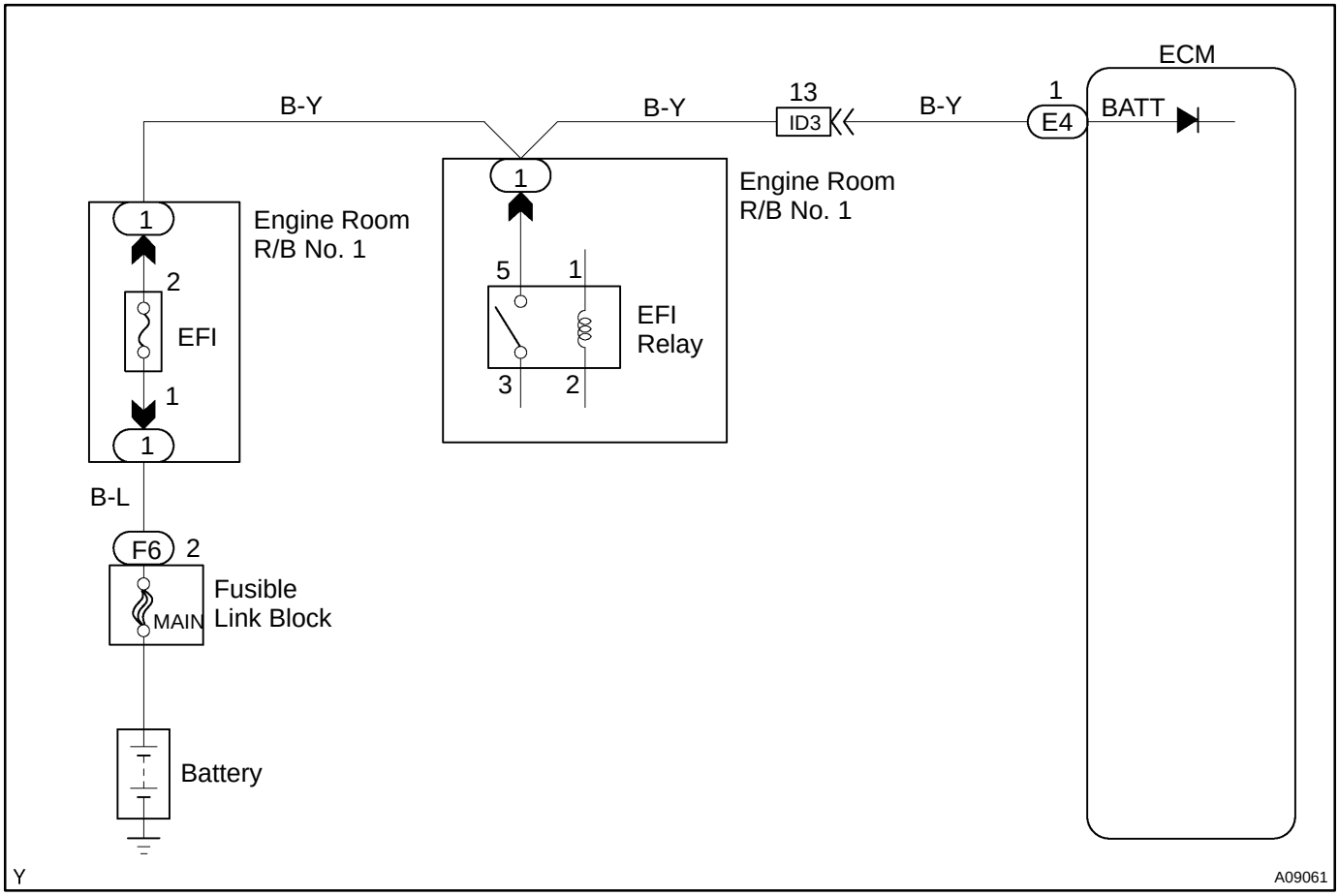

INSPECTION PROCEDURE

HINT:
Read freeze frame data using TOYOTA hand-held tester or OBD II scan tool. Because freeze frame records the engine conditions when the malfunction is detected, when troubleshooting it is useful for determining whether the vehicle was running or stopped, the engine warmed up or not, the air-fuel ratio lean or rich, etc. at the time of the malfunction.

1	Check voltage between terminal BATT of ECM connector and body ground.

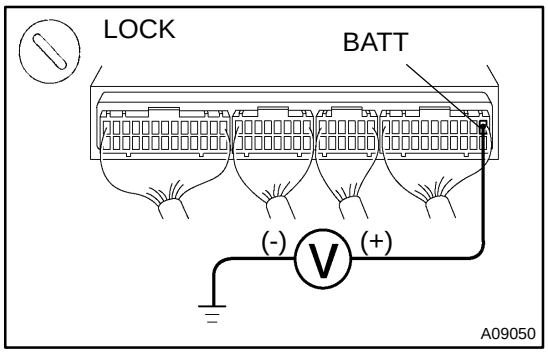

PREPARATION:
Remove the connector cover from the ECM.
CHECK:
Measure voltage between terminal BATT of the ECM connector and body ground.
OK:
Voltage 9 - 14 V

OK	Check and replace ECM (See page IN-29).

NG

2	Check EFI fuse.

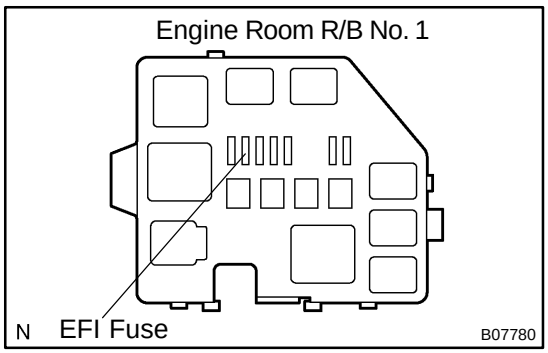

PREPARATION:
Remove the EFI fuse from the engine room J/B.
CHECK:
Check continuity of EFI fuse.
OK:
Continuity

NG	Check for short in all the harness and components connected to EFI fuse.

OK

Check and repair harness or connector between battery and EFI fuse and ECM (See page IN-29).

DI6VO-04

DTC	P1656	OCV Circuit Malfunction

CIRCUIT DESCRIPTION

Refer to DTC P1349 (VVT System Malfunction) on page DI-122 .

DTC No.	DTC Detecting Condition	Trouble Area
P1656 P1663	Open or short in oil control valve circuit	• Open or short in oil control valve circuit • Oil control valve • ECM

WIRING DIAGRAM

Refer to DTC P1349 (VVT System Malfunction) on page DI-122 for the WIRING DIAGRAM.

INSPECTION PROCEDURE

HINT:

Read freeze frame data using TOYOTA hand-held tester or OBD II scan tool. Because freeze frame records the engine conditions when the malfunction is detected, when troubleshooting it is useful for determining whether the vehicle was running or stopped, the engine warmed up or not, the air-fuel ratio lean or rich, etc. at the time of the malfunction.

TOYOTA hand-held tester

1	**Check OCV circuit.**

PREPARATION:

(a) Start the engine and warmed it up.

(b) Connect the TOYOTA hand-held tester and select VVT from ACTIVE TEST menu.

CHECK:

Check the engine speed when operate the OCV by the TOYOTA hand-held tester.

OK:

VVT system is OFF (OCV is OFF): Normal engine speed

VVT system is ON (OCV is ON): Rough idle or engine stalled

OK → **Check for intermittent problems (See page DI-3).**

NG

2	**Check operation of OCV.**

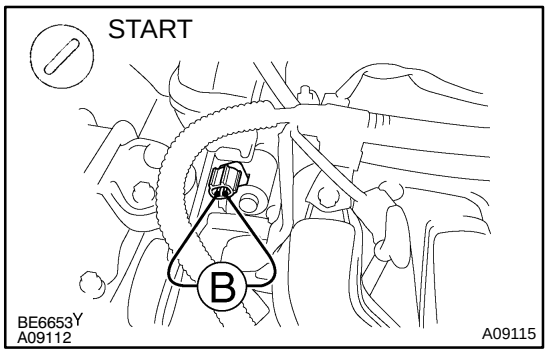

PREPARATION:

(a) Start the engine and warmed it up.
(b) Disconnect the OCV connector.
(c) Apply battery positive voltage between terminals of the OCV.

CHECK:

Check the engine speed.

OK:

Rough idle or engine stalled.

NG → **Replace OCV.**

OK

3	**Check voltage between terminals OCV+ and OCV- of ECM connector (See page DI-122).**

NG → **Check and replace ECM (See page IN-29).**

OK

4	**Check for open and short in harness and connector between OCV and ECM (See page IN-29).**

NG → **Repair or replace.**

OK

Check for intermitent problems (See page DI-3).

OBD II scan tool (excluding TOYOTA hand-held tester)

1	**Check operation of OCV.**

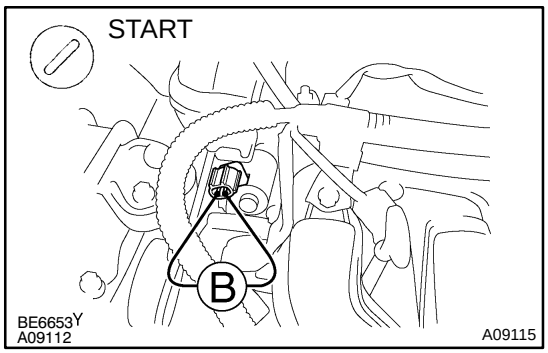

PREPARATION:

(a) Start the engine and warmed it up.
(b) Disconnect the OCV connector.
(c) Apply battery positive voltage between terminals of the OCV.

CHECK:

Check the engine speed.

OK:

Rough idle or engine stalled

NG → **Replace OCV.**

OK ↓

2	**Check voltage between terminals OCV+ and OCV- of ECM connector (See page DI-122).**

NG → **Check and replace ECM (See page IN-29).**

OK ↓

3	**Check for open and short in harness and connector between OCV and ECM (See page IN-29).**

NG → **Repair or replace.**

OK ↓

Check for intermitent problems (See page DI-3).

DI6VP-01

DTC	P1780	Park/Neutral Position Switch Malfunction (Only for A/T)

CIRCUIT DESCRIPTION

The park/neutral position switch goes on when the shift lever is in the N or P shift position. When it goes on terminal NSW of the ECM is grounded to body ground via the starter relay thus the terminal NSW voltage becomes 0V. When the shift lever is in the D, 2, L, or R position, the park/neutral position switch goes off, so the voltage of ECM. Terminal NSW becomes battery positive voltage, the voltage of the ECM internal power source.
If the shift lever is moved from the N position to the D position, this signal is used for air-fuel ratio correction and for idle speed control (estimated control), etc.

DTC No.	DTC Detecting Condition	Trouble Area
P1780	2 or more switches are ON simultaneously for ”N”, ”2”, ”L”and ”R” position (2 trip detection logic)	• Short in park/neutral position switch circuit • Park/neutral position switch • ECM
	When driving under conditions (a) and (b) for 30 sec. or more the park/neutral position switch is ON (N position): (2 trip detection logic) (a) Vehicle speed: 80 km/h (50 mph) or more (b) Engine speed: 2,000 ~ 5,000 rpm	

HINT:
After confirming DTC P1780, use the TOYOTA hand-held tester to confirm the PNP switch signal from ”CURRENT DATA”.

WIRING DIAGRAM

Refer to DTC P1780 on page DI-189 for the WIRING DIAGRAM.

INSPECTION PROCEDURE

HINT:
Read freeze frame data using TOYOTA hand-held tester or OBD II scan tool. Because freeze frame records the engine conditions when the malfunction is detected, when troubleshooting it is useful for determining whether the vehicle was running or stopped, the engine warmed up or not, the air-fuel ratio lean or rich, etc. at the time of the malfunction.
Refer to DTC P1780 on DI-189 for the INSPECTION PROCEDURE.

DI6UV-05

CIRCUIT INSPECTION

DTC	P0100	Mass Air Flow Circuit Malfunction

CIRCUIT DESCRIPTION

The mass air flow meter uses a platinum hot wire. The hot wire air flow meter consists of a platinum hot wire, thermistor and a control circuit installed in a plastic housing. The hot wire air flow meter works on the principle that the hot wire and thermistor located in the intake air bypass of the housing detect any changes in the intake air temp.

The hot wire is maintained at the set temp. by controlling the current flow through the hot wire. This current flow is then measured as the output voltage of the air flow meter.

The circuit is constructed so that the platinum hot wire and thermistor provide a bridge circuit,with the power transistor controlled so that the potential of A and B remains equal to maintain the set temp.

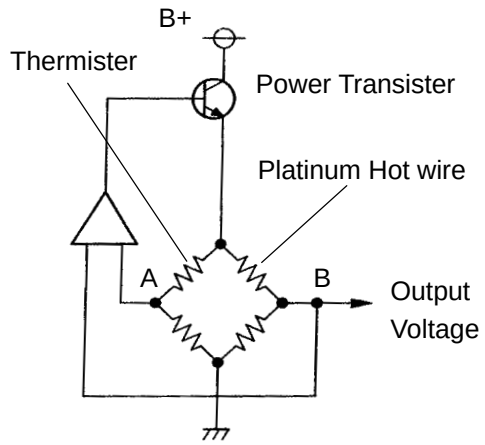

FI6929
S05741

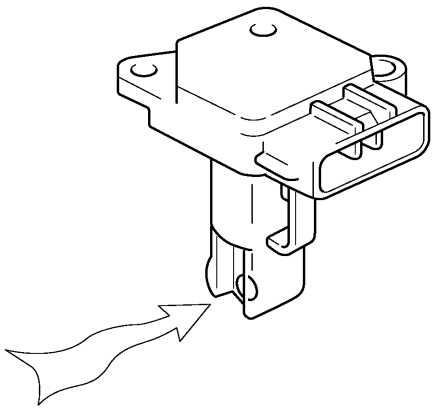

A06106

DTC No.	DTC Detecting Condition	Trouble Area
P0100	Open or short in mass air flow meter circuit with more than 3 sec. engine speed 4,000 rpm or less	• Open or short in mass air flow meter circuit • Mass air flow meter • ECM

If the ECM detects DTC ”P0100” it operates the fail-safe function, keeping the ignition timing and injection volume constant and making it possible to drive the vehicle.

HINT:

After confirming DTC P0100 use the OBD II scan tool or TOYOTA hand-held tester to confirm the mass air flow ratio from ”CURRENT DATA”.

Mass Air Flow Value (gm/sec.)	Malfunction
0.0	• Mass air flow meter power source circuit open • VG circuit open or short
271.0 or more	• E2G circuit open

WIRING DIAGRAM

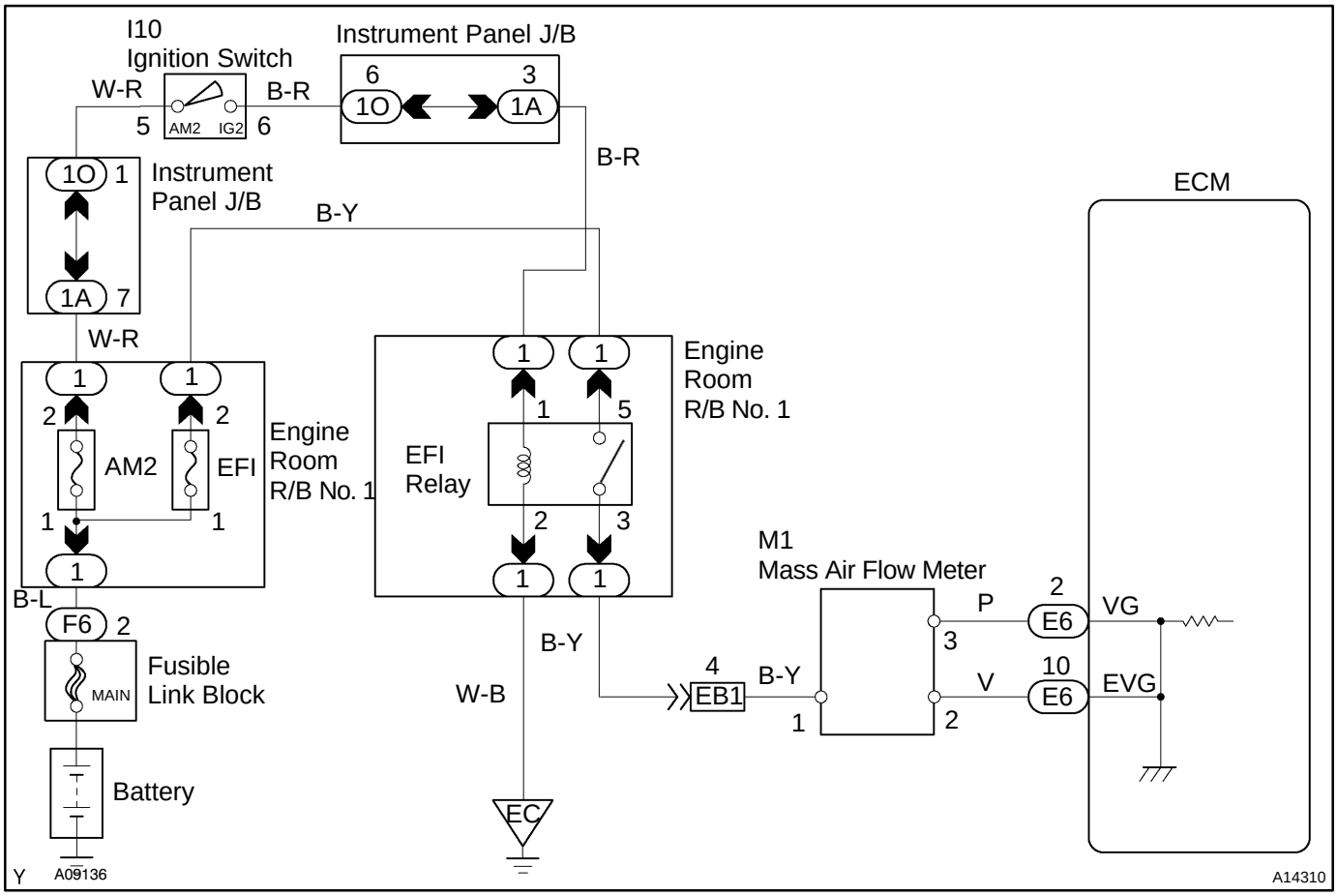

INSPECTION PROCEDURE

HINT:

Read freeze frame data using TOYOTA hand-held tester or OBD II scan tool. Because freeze frame records the engine conditions when the malfunction is detected, when troubleshooting it is useful for determining whether the vehicle was running or stopped, the engine warmed up or not, the air-fuel ratio lean or rich, etc. at the time of the malfunction.

1	**Connect OBD II scan tool or TOYOTA hand-held tester, and read value of mass air flow rate.**

PREPARATION:

(a) Connect the OBD II scan tool or TOYOTA hand-held tester to the DLC3.
(b) Turn ignition switch ON and push the OBD II scan tool or TOYOTA hand-held tester main switch ON.
(c) Start the engine.

CHECK:

Read mass air flow rate on the OBD II scan tool or TOYOTA hand-held tester.

RESULT:

	Type I	Type II
Mass air flow rate (gm/sec.)	0.0	271.0 or more

Type I → **Go to step 2.**

Type II → **Go to step 5.**

2	**Check voltage of mass air flow meter power source.**

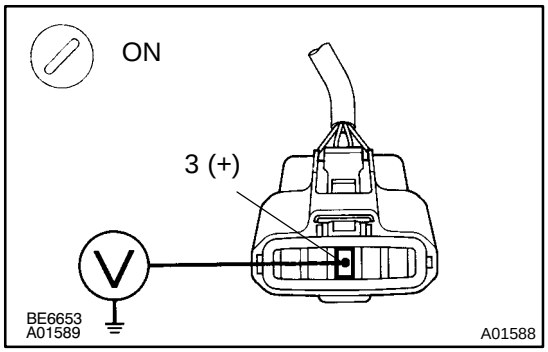

PREPARATION:

(a) Disconnect the mass air flow meter connector.

(b) Turn ignition switch ON.

CHECK:

Measure voltage between terminal 4 of mass air flow meter connector and body ground.

OK:

Voltage: 9 - 14 V

NG → **Check for open in harness and connector between EFI main relay (Marking: EFI) and mass air flow meter (See page IN-29).**

OK

3	**Check voltage between terminal VG of ECM connector and body ground.**

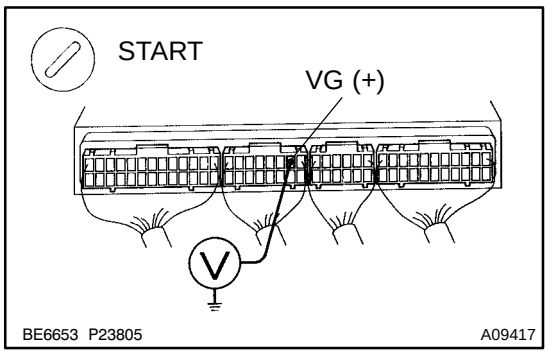

PREPARATION:

(a) Remove the connector cover from the ECM.

(b) Start the engine.

CHECK:

Measure voltage between terminal VG of ECM and body ground while engine is idling.

OK:

Voltage:

1.1 - 1.5 V (P or N position and A/C switch OFF)

OK → **Check and replace ECM (See page IN-29).**

NG

4	**Check for open and short in harness and connector between mass air flow meter and ECM (See page IN-29).**

NG → **Repair or replace harness or connector.**

OK

Replace mass air flow meter.

5	**Check continuity between terminal EVG of ECM connector and body ground.**

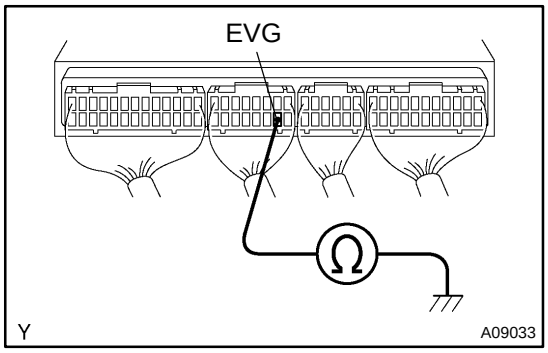

PREPARATION:
Remove the connector cover from the ECM.
CHECK:
Check continuity between terminal EVG of ECM connector and body ground.
OK:
Continuity (1 Ω or less)

NG → **Check and replace ECM (See page IN-29).**

OK

6	**Check for open in harness and connector between mass air flow meter and ECM (See page IN-29).**

NG → **Repair or replace harness or connector.**

OK

Replace mass air flow meter.

DI6UW-04

DTC	P0101	Mass Air Flow Circuit Range/Performance Problem

CIRCUIT DESCRIPTION

Refer to DTC P0100 (Mass Air Flow Circuit Malfunction) on page DI-22 .

DTC No.	DTC Detecting Condition	Trouble Area
P0101	Conditions (a), (b) and (c) continue 10 sec. or more with engine speed 900 rpm or less: (2 trip detection logic) (a) Throttle valve fully closed (b) Mass air flow meter output > 2.2 V (c) THW > 70°C	• Mass air flow meter
	Conditions (a) and (b) continue 10 sec. or more with engine speed 1,500 rpm or more: (2 trip detection logic) (a) VTA ≧ 0.63 V (b) Mass air flow meter output < 1.06 V	

WIRING DIAGRAM

Refer to DTC P0100 (Mass Air Flow Circuit Malfunction) on page DI-22 for the WIRING DIAGRAM.

INSPECTION PROCEDURE

HINT:

Read freeze frame data using TOYOTA hand-held tester or OBD II scan tool. Because freeze frame records the engine conditions when the malfunction is detected, when troubleshooting it is useful for determining whether the vehicle was running or stopped, the engine warmed up or not, the air-fuel ratio lean or rich, etc. at the time of the malfunction.

1	Are there any other codes (besides DTC P0101) being output?

NO → Replace mass air flow meter.

YES

Go to relevant DTC chart (See page DI-14).

DI6UX-04

DTC	P0110	Intake Air Temp. Circuit Malfunction

CIRCUIT DESCRIPTION

(fig.1)

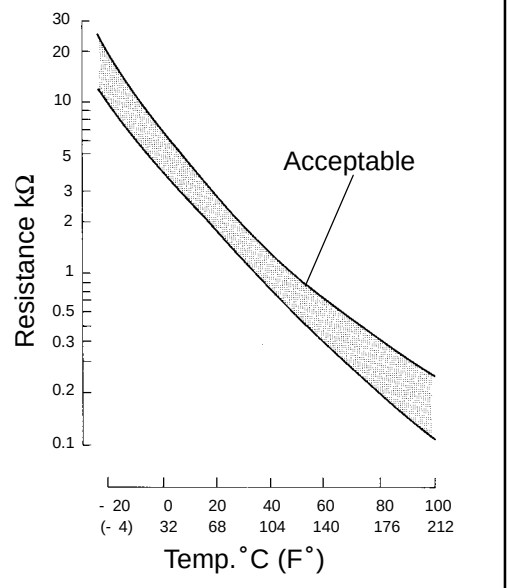

The intake air temp. sensor is built into the mass air flow meter and senses the intake air temperature.

A thermistor built in the sensor changes the resistance value according to the intake air temperature, the lower the intake air temperature, the greater the thermistor resistance value, and the higher the intake air temperature, the lower the thermistor resistance value (See fig.1).

The air intake temperature sensor is connected to the ECM (See below). The 5V power source voltage in the ECM is applied to the intake air temp. sensor from the terminal THA via a resistor R.

That is, the resistor R and the intake air temp. sensor are connected in series. When the resistance value of the intake air temp. sensor changes in accordance with changes in the intake air temperature, the potential at terminal THA also changes. Based on this signal, the ECM increases the fuel injection volume to improve driveability during cold engine operation.

If the ECM detects the DTC "P0110", it operates the fail safe function in which the intake air temperature is assumed to be 20˚C (68˚F).

DTC No.	DTC Detecting Condition	Trouble Area
P0110	Open or short in intake air temp. sensor circuit	• Open or short in intake air temp. sensor circuit • Intake air temp. sensor (built into mass air flow meter) • ECM

HINT:

After confirming DTC P0110, use the OBD II scan tool or TOYOTA hand-held tester to confirm the intake air temperature from CURRENT DATA.

Temperature Displayed	Malfunction
-40 ˚C (-40˚F)	Open circuit
140˚C (284˚F) or more	Short circuit

WIRING DIAGRAM

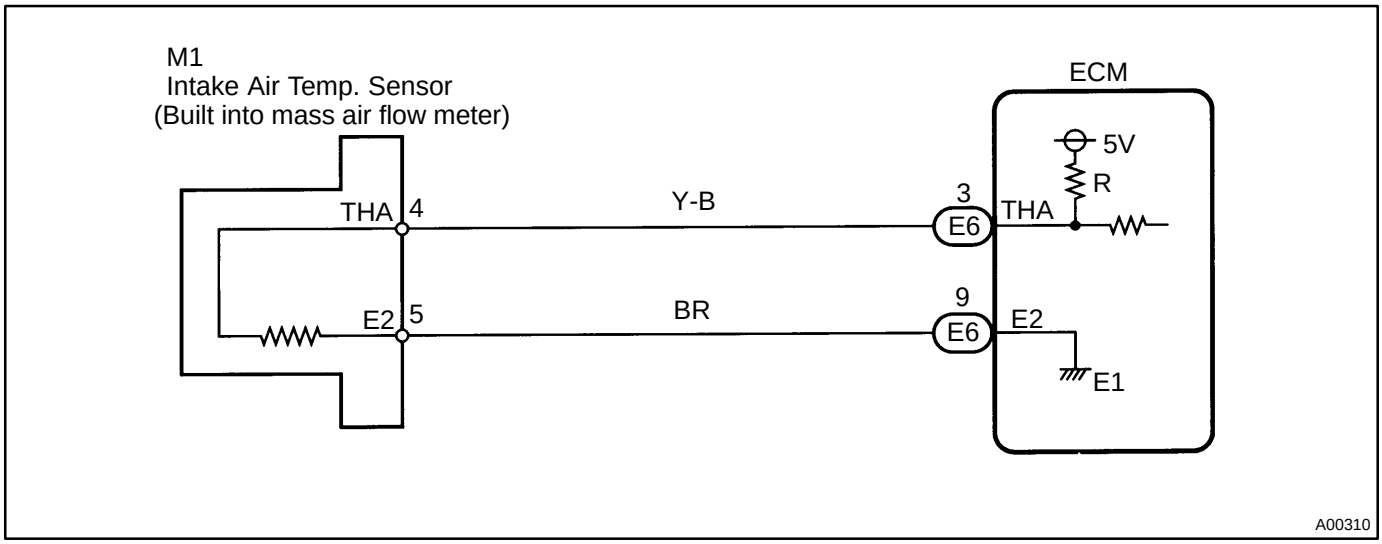

INSPECTION PROCEDURE

HINT:

- If DTC P0110 (Intake Air Temp. Circuit Malfunction), P0115 (Engine Coolant Temp. Circuit Malfunction) and P0120 (Throttle/Pedal Position Sensor/Switch ”A” Circuit Malfunction) are output simultaneously, E2 (sensor ground) may be open.
- Read freeze frame data using TOYOTA hand-held tester or OBD II scan tool. Because freeze frame records the engine conditions when the malfunction is detected, when troubleshooting it is useful for determining whether the vehicle was running or stopped, the engine warmed up or not, the air-fuel ratio lean or rich, etc. at the time of the malfunction.

1	**Connect OBD II scan tool or TOYOTA hand-held tester, and read value of intake air temperature.**

PREPARATION:

(a) Connect the OBD II scan tool or TOYOTA hand-held tester to DLC3.

(b) Turn the ignition switch ON and push the OBD II scan tool or TOYOTA hand-held tester main switch ON.

CHECK:

Read temperature value on the OBD II scan tool or TOYOTA hand-held tester.

OK:

Same as actual air intake temperature.

HINT:

- If there is open circuit, OBD II scan tool or TOYOTA hand-held tester indicates - 40˚C (- 40˚F).
- If there is short circuit, OBD II scan tool or TOYOTA hand−held tester indicates 140˚C (284˚F) or more.

NG	**-40˚C (-40˚F) ....Go to step 2.** **140˚C (284˚F) or more ....Go to step 4.**

OK

Check for intermittent problems
(See page DI-3).

2	**Check for open in harness or ECM.**

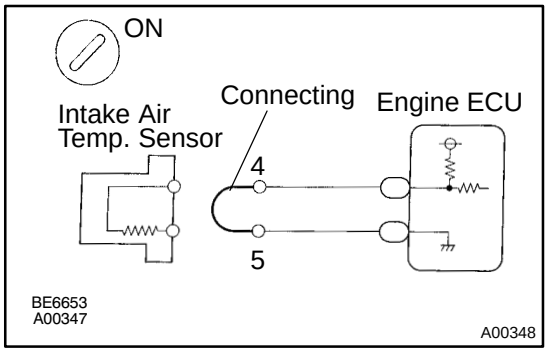

PREPARATION:

(a) Disconnect the intake temp. sensor connector.

(b) Connect sensor wire harness terminals together.

(c) Turn the ignition switch ON.

CHECK:

Read temp. value on the OBD II scan tool or TOYOTA hand-held tester.

OK:

Temp. value: 140˚C (284˚F) or more

OK	**Confirm good connection at sensor. If OK, replace intake air temp. sensor.**

NG

3	Check for open in harness or ECM.

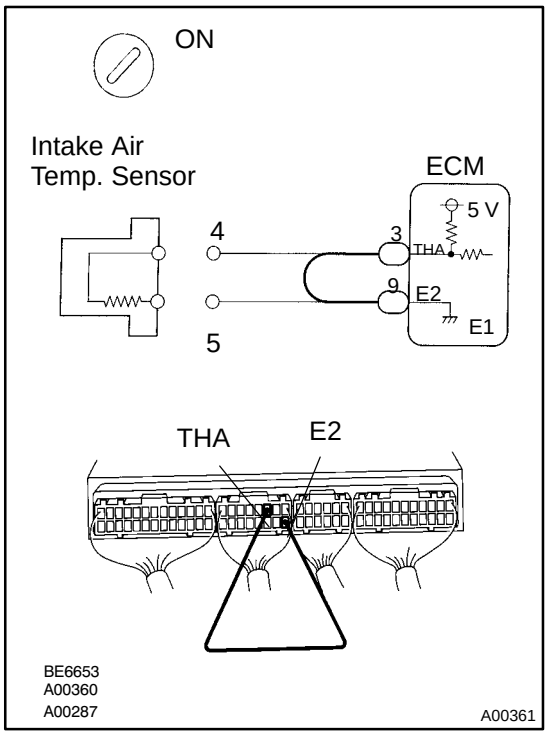

PREPARATION:

(a) Remove the connector cover from the ECM.

(b) Connect between terminals THA and E2 of the ECM connector.

HINT:

In take air temp. sensor connector is disconnected.

Before checking, do a visual and contact pressure check for the ECM connector (See page IN-29).

(c) Turn the ignition switch ON.

CHECK:

Read temperature value on the OBD II scan tool or TOYOTA hand-held tester.

OK:

Temperature value: 140˚C (284˚F) or more

OK	Open in harness between terminals E2 or THA, repair or replace harness.

NG

Confirm good connection at ECM. If OK, check and replace ECM (See page IN-29).

4	Check for short in harness and ECM.

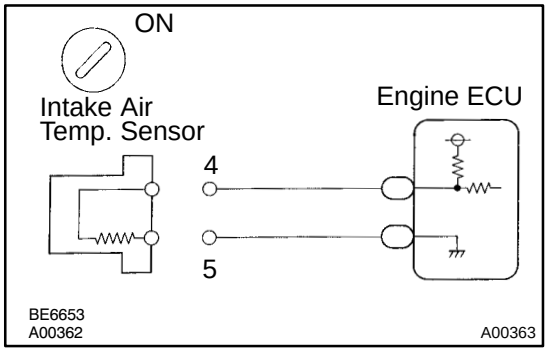

PREPARATION:

(a) Disconnect the mass air flow meter connector.

(b) Turn the ignition switch ON.

CHECK:

Read temperature value on the OBD II scan tool or TOYOTA hand-held tester.

OK:

Temperature value: -40˚C (-40˚F)

OK	Replace mass air flow meter.

NG

5	Check for short in harness or ECM.

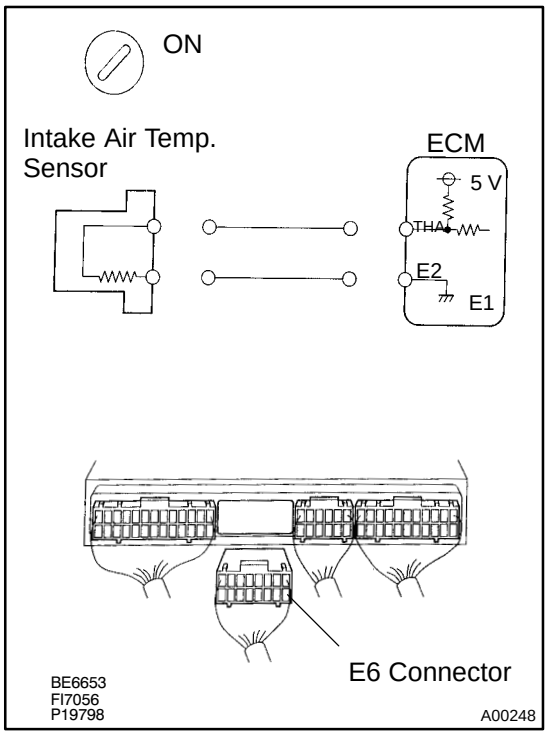

PREPARATION:

(a) Remove the connector cover from the ECM.

(b) Disconnect the E6 connector of the ECM.

HINT:

Intake air temp. sensor connector is disconnected.

(c) Turn the ignition switch ON.

CHECK:

Read temperature value on the OBD II scan tool or TOYOTA hand-held tester.

OK:

Temperature value: -40˚C (-40˚F)

OK → **Repair or replace harness or connector.**

NG

Check and replace ECM (See page IN-29).

DI6UY-04

DTC	P0115	Engine Coolant Temp. Circuit Malfunction

CIRCUIT DESCRIPTION

A thermistor built into the engine coolant temp. sensor changes the resistance value according to the engine coolant temp.
The structure of the sensor and connection to the ECM is the same as in the intake air temp. circuit malfunction shown on page DI-27 .
If the ECM detects the DTC P0115, it operates fail safe function in which the engine coolant temperature is assumed to be 80˚C (176˚F).

DTC No.	Detection Item	Trouble Area
P0115	Open or short in engine coolant temp. sensor circuit	• Open or short in engine coolant temp. sensor circuit • Engine coolant temp. sensor • ECM

HINT:
After confirming DTC P0115, use the OBD II scan tool or TOYOTA hand-held tester to confirm the engine coolant temp. from ”CURRENT DATA”.

Temp. Displayed	Malfunction
-40 ˚C (-40˚F)	Open circuit
140˚C (284˚F) or more	Short circuit

WIRING DIAGRAM

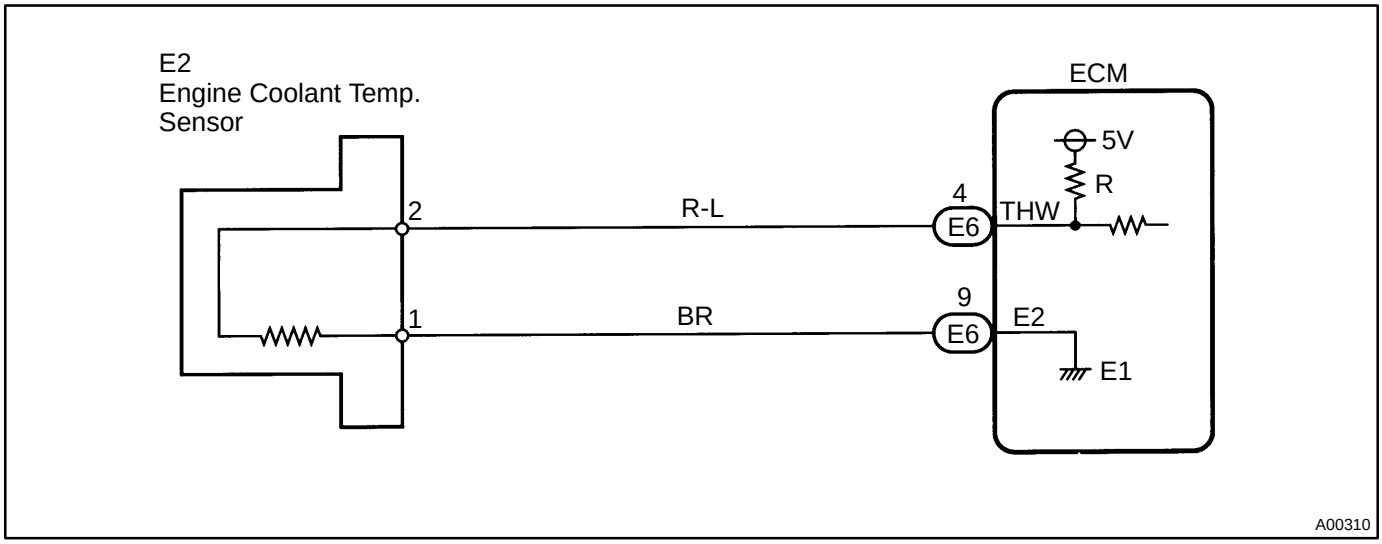

INSPECTION PROCEDURE

HINT:

- If DTC P0110 (Intake Air Temp. Circuit Malfunction), P0115 (Engine Coolant Temp. Circuit Malfunction), P0120 (Throttle/Pedal Position Sensor/Switch "A" Circuit Malfunction) are output simultaneously, E2 (sensor ground) may be open.
- Read freeze frame data using TOYOTA hand-held tester or OBD II scan tool. Because freeze frame records the engine conditions when the malfunction is detected, when troubleshooting it is useful for determining whether the vehicle was running or stopped, the engine warmed up or not, the air-fuel ratio lean or rich, etc. at the time of the malfunction.

1	**Connect OBD II scan tool or TOYOTA hand-held tester, and read value of engine coolant temperature.**

PREPARATION:

(a) Connect the OBD II scan tool or TOYOTA hand-held tester to the DLC3.

(b) Turn the ignition switch ON and push the OBD II scan tool or TOYOTA hand-held tester main switch ON.

CHECK:

Read temperature value on the OBD II scan tool or TOYOTA hand-held tester.

OK:

Same as actual engine coolant temperature

HINT:

- If there is open circuit, OBD II scan tool or TOYOTA hand-held tester indicates -40˚C (-40˚F).
- If there is open circuit, OBD II scan tool or TOYOTA hand−held tester indicates 140˚C (284˚F) or more.

NG → **-40˚C (-40˚F) ... Go to step 2.**
140˚C (284˚F) or more ... Go to step 4.

OK

Check for intermittent problems (See page DI-3).

2	Check for open in harness or ECM.

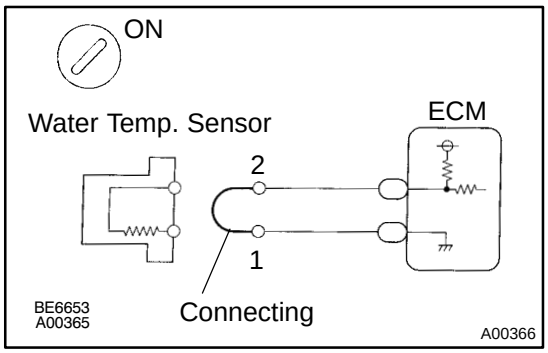

PREPARATION:

(a) Disconnect the engine coolant temp. sensor connector.
(b) Connect the sensor wire harness terminals together.
(c) Turn the ignition switch ON.

CHECK:

Read temperature value on the OBD II scan tool or TOYOTA hand-held tester.

OK:

Temperature value: 140˚C (284˚F) or more

OK	Confirm good connection at sensor. If OK, replace engine coolant temp. sensor.

NG

3	Check for open in harness or ECM.

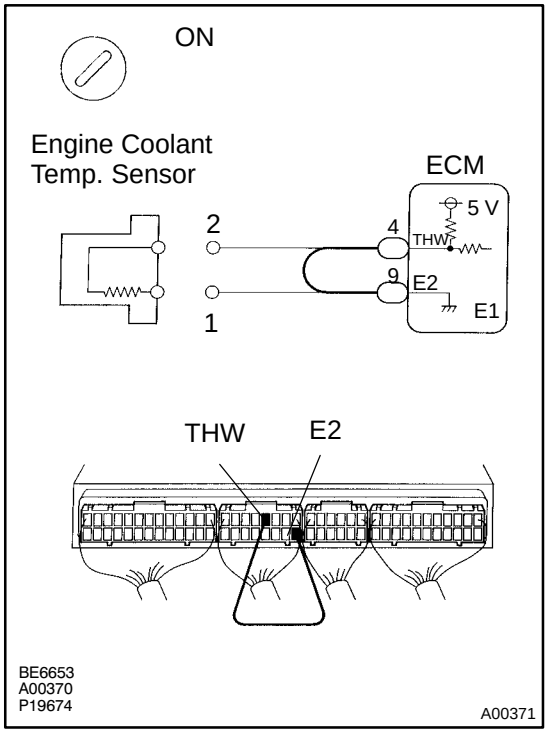

PREPARATION:

(a) Remove the connector cover from the ECM.
(b) Connect between terminals THW and E2 of the ECM connector.

HINT:

Engine coolant temp. sensor connector is disconnected. Before checking, do a visual and contact pressure check for the ECM connector (See page IN-29).

(c) Turn the ignition switch ON.

CHECK:

Read temperature value on the OBD II scan tool or TOYOTA hand-held tester.

OK:

Temperature value: 140˚C (284˚F) or more

OK	Open in harness between terminals E2 or THW, repair or replace harness.

NG

Confirm good connection at ECM. If OK, check and replace ECM (See page IN-29).

4	Check for short in harness and ECM.

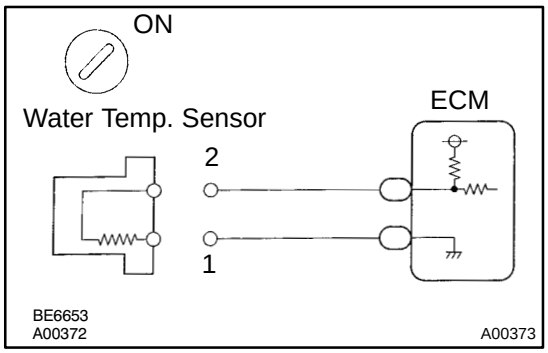

PREPARATION:
(a) Disconnect the engine coolant temp. sensor connector.
(b) Turn the ignition switch ON.
CHECK:
Read temperature value on the OBD II scan tool or TOYOTA hand-held tester.
OK:
Temperature value: - 40˚C (- 40˚F)

OK	Replace engine coolant temp. sensor.

NG

5	Check for short in harness or ECM.

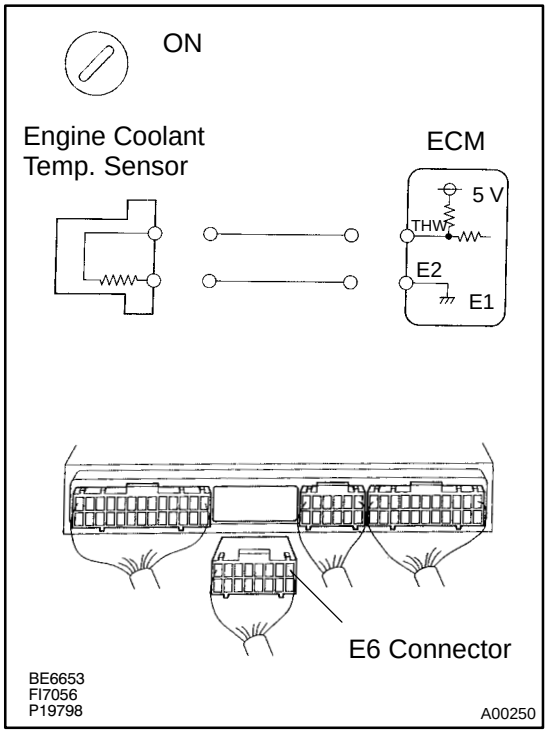

PREPARATION:
(a) Remove the connector cover from the ECM.
(b) Disconnect the E6 connector of the ECM.
HINT:
Engine coolant temp. sensor connector is disconnected.
(c) Turn the ignition switch ON.
CHECK:
Read temperature value on the OBD II scan tool or TOYOTA hand-held tester.
OK:
Temperature value: -40˚C (-40˚F)

OK	Repair or replace harness or connector.

NG

Check and replace ECM (See page IN-29).

DI6UZ-01

DTC	P0116	Engine Coolant Temp. Circuit Range/ Performance Problem

CIRCUIT DESCRIPTION

Refer to DTC P0115 (Engine Coolant Temp. Circuit Malfunction) on page DI−32.

DTC No.	DTC Detecting Condition	Trouble Area
P0116	When the engine starts, the water temp. is -7˚C (20˚F) or less. And, 20 min. or more after the engine starts, the engine temp. sensor value is 20˚C (68˚F) or less (2 trip detection logic)	• Engine coolant temp. sensor • Cooling system
	When the engine starts, the water temp. is between -7˚C (20˚F) and 10˚C (50˚F) And, 5 min. or more after the engine starts, the engine coolant temp. sensor value is 20˚C (68˚F) or less (2 trip detection logic)	

INSPECTION PROCEDURE

HINT:

- If DTC P0115 (Engine Coolant Temp. Circuit Malfunction) and P0116 (Engine Coolant Temp. Circuit Range/Performance Problem) are output simultaneously, engine coolant temp. sensor circuit may be open. Perform troubleshooting of DTC P0115 first.
- Read freeze frame data using TOYOTA hand-held tester or OBD II scan tool. Because freeze frame records the engine conditions when the malfunction is detected, when troubleshooting it is useful for determining whether the vehicle was running or stopped, the engine warmed up or not, the air-fuel ratio lean or rich, etc. at the time of the malfunction.

1	Are there any other codes (besides DTC P0116) being output?

YES → Go to relevant DTC chart.

NO

2	Check thermostat (See page CO-7).

NG → Replace thermostat.

OK

Replace engine coolant temp. sensor.

DI6V0-02

DTC	P0120	Throttle Position Sensor/Switch "A" Circuit Malfunction

CIRCUIT DESCRIPTION

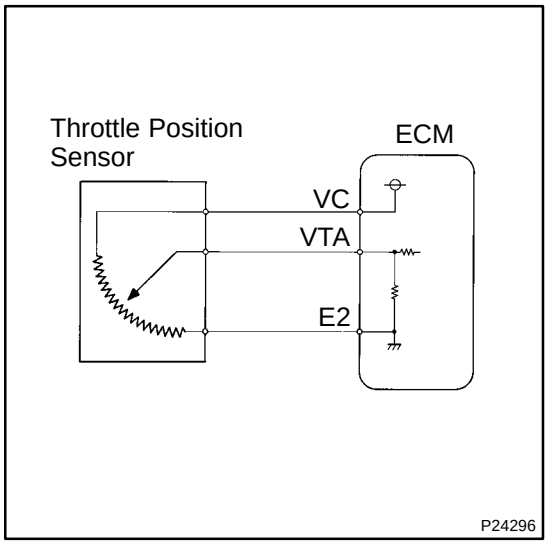

The throttle position sensor is mounted in the throttle body and detects the throttle valve opening angle. When the throttle valve is fully closed, a voltage of approximately 0.3 - 0.8 V is applied to terminal VTA of the ECM. The voltage applied to the terminals VTA of the ECM increases in proportion to the opening angle of the throttle valve and becomes approximately 3.2 - 4.9 V when the throttle valve is fully opened. The ECM judges the vehicle driving conditions from this signal input from terminal VTA, and uses it as one of the conditions for deciding the air-fuel ratio correction, power increase correction and fuel-cut control etc.

DTC No.	DTC Detecting Condition	Trouble Area
P0120	Condition (a) or (b) continues with more than 5 sec.: (a) VTA < 0.1 V (b) VTA > 4.9 V	• Open or short in throttle position sensor circuit • Throttle position sensor • ECM

HINT:

After confirming DTC P0120, use the OBD II scan tool or TOYOTA hand-held tester to confirm the throttle valve opening percentage.

Throttle valve opening position expressed as percentage		Trouble Area
Throttle valve fully closed	Throttle valve fully open	
0 %	0 %	VC line open VTA line open or short
Approx. 100 %	Approx. 100 %	E2 line open

WIRING DIAGRAM

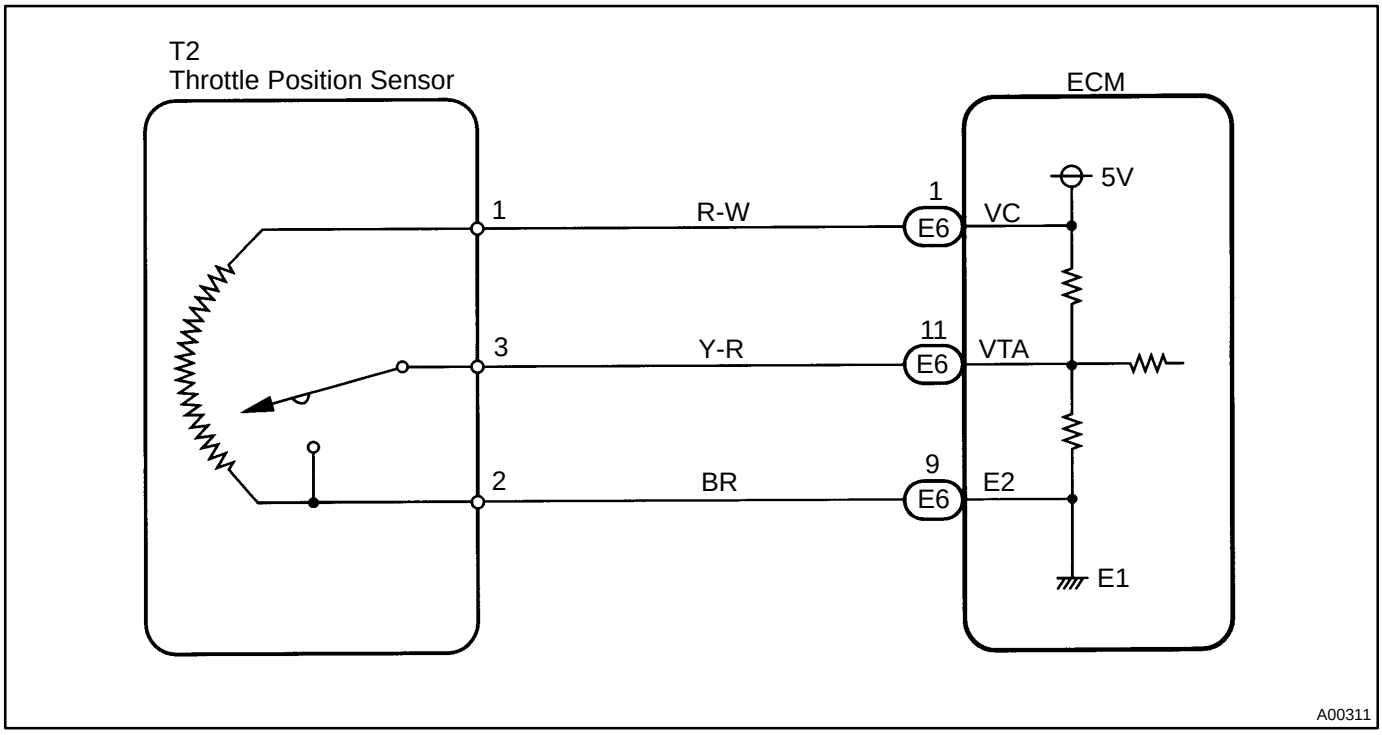

INSPECTION PROCEDURE

HINT:

- If DTC P0110 (Intake Air Temp. Circuit Malfunction), P0115 (Engine Coolant Temp. Circuit Malfunction), P0120 (Throttle/Pedal Position Sensor/Switch ”A” Circuit Malfunction) are output simultaneously, E2 (sensor ground) may be open.
- Read freeze frame data using TOYOTA hand-held tester or OBD II scan tool. Because freeze frame records the engine conditions when the malfunction is detected, when troubleshooting it is useful for determining whether the vehicle was running or stopped, the engine warmed up or not, the air-fuel ratio lean or rich, etc. at the time of the malfunction.

1	**Connect the OBD II scan tool or TOYOTA hand-held tester, read the throttle valve opening percentage.**

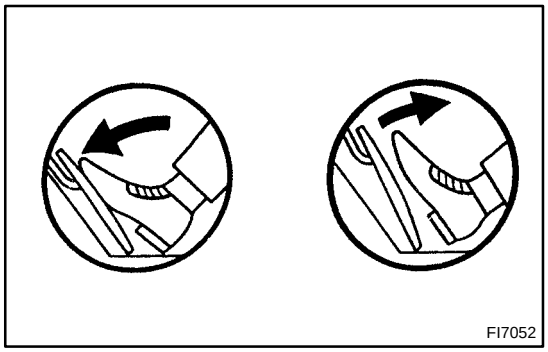

PREPARATION:

(a) Connect the OBD II scan tool or TOYOTA hand-held tester to DLC3.

(b) Turn the ignition switch ON and push the OBD II scan tool or TOYOTA hand-held tester main switch ON.

CHECK:

Read the throttle valve opening percentage.

OK:

Throttle valve	Throttle valve opening position expressed as percentage
Fully open	Approx. 70 %
Fully closed	Approx. 10 %

OK → **Check for intermittent problems (See page DI-3).**

NG

2	**Check voltage between terminal VC of throttle position sensor connector and body ground.**

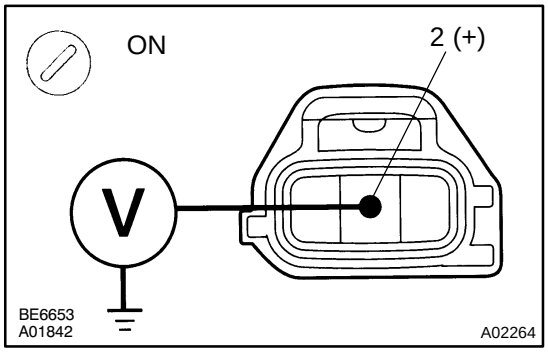

PREPARATION:

(a) Disconnect the throttle position sensor connector.

(b) Turn the ignition switch ON.

CHECK:

Measure voltage between terminal 2 of the throttle position connector and body ground.

OK:

Voltage: 4.5 - 5.5 V

NG → **Go to step 5.**

OK

3	Check throttle position sensor (See page SF-32).

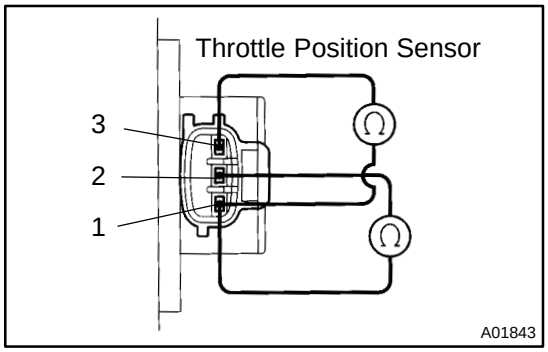

PREPARATION:
Disconnect the throttle position sensor connector.
CHECK:
Measure resistance between terminals 1, 3 and 2 of the throttle position sensor.
OK:

Terminals	Throttle valve	Resistance kΩ
1 - 2	—	2.5 - 5.9
1 - 3	Fully closed	0.2 - 5.7
	Fully open	2.0 - 10.2

NG → **Replace throttle position sensor.**

OK

4	Check voltage between terminals VTA and E2 of ECM connector.

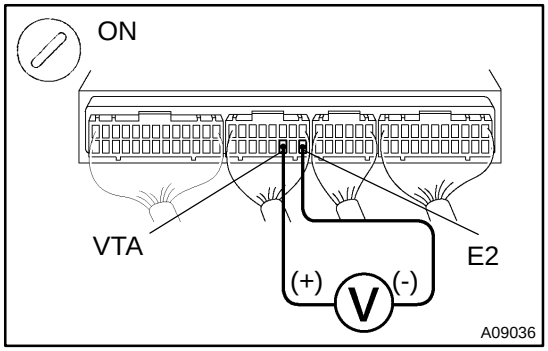

PREPARATION:
(a) Remove the connector cover from the ECM.
(b) Turn the ignition switch ON.
CHECK:
Measure voltage between terminals VTA and E2 of the ECM connector.
OK:

Throttle valve	Voltage
Fully closed	0.3 - 1.0 V
Fully open	3.2 - 4.9 V

NG → **Check for open and short in harness and connector between ECM and throttle position sensor (VTA or E2 line) (See page IN-29).**

OK

Check and replace ECM (See page IN-29).

5	Check voltage between terminals VC and E2 of ECM connector.

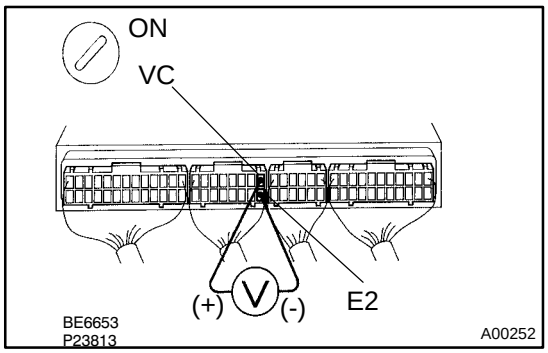

PREPARATION:

(a) Remove the connector cover from the ECM.

(b) Turn ignition switch ON.

CHECK:

Measure voltage between terminals VC and E2 of the ECM connector.

OK:

Voltage: 4.5 - 5.5 V

NG → **Check and replace ECM (See page IN-29).**

OK

Check for open in harness and connector between ECM and sensor (VC line) (See page IN-29).

DI6V1-04

DTC	P0121	Throttle/Pedal Position Sensor/Switch ”A” Circuit Range/Performance Problem

CIRCUIT DESCRIPTION

Refer to DTC P0120 (Throttle/Pedal Position Sensor/Switch ”A” Circuit Malfunction) on page DI−37.

DTC No.	Detection Item	Trouble Area
P0121	After the vehicle speed has been exceeded 30 km/h (19 mph) even once, the output value of the throttle position sensor is out of the applicable range while the vehicle speed between 30 km/h (19 mph) and 0 km/h (0 mph). (2 trip detection logic)	• Throttle position sensor • ECM

INSPECTION PROCEDURE

HINT:
Read freeze frame data using TOYOTA hand-held tester or OBD II scan tool. Because freeze frame records the engine conditions when the malfunction is detected, when troubleshooting it is useful for determining whether the vehicle was running or stopped, the engine warmed up or not, the air-fuel ratio lean or rich, etc. at the time of the malfunction.

1	**Are there any other codes (besides DTC P0121) being output?**

YES → **Go to relevant DTC chart (See page DI-14).**

NO

Replace throttle position sensor.

DTC	P0125	Insufficient Temp. for Closed Loop Fuel Control

CIRCUIT DESCRIPTION

To obtain a high purification rate for the CO, HC and NOx components of the exhaust gas, a three-way catalytic converter is used, but for the most efficient use of the three-way catalytic converter, the air-fuel ratio must be precisely controlled so that it is always close to the stoichiometric air-fuel ratio.
The oxygen sensor has the characteristic whereby its output voltage changes suddenly in the vicinity of the stoichiometric air-fuel ratio. This is used to detect the oxygen concentration in the exhaust gas and provide feedback to the computer for control of the air-fuel ratio.
When the air-fuel ratio becomes LEAN, the oxygen concentration in the exhaust increases and the oxygen sensor informs the ECM of the LEAN condition (small electromotive force: < 0.45 V).
When the air-fuel ratio is RICHER than the stoichiometric air-fuel ratio the oxygen concentration in the exhaust gas in reduced and the oxygen sensor informs the ECM of the RICH condition (large electromotive force: > 0.45V).
The ECM judges by the electromotive force from the oxygen sensor whether the air-fuel ratio is RICH or LEAN and controls the injection time accordingly. However, if malfunction of the oxygen sensor causes output of abnormal electromotive force, the ECM is unable to perform accurate air-fuel ratio control.
The oxygen sensors include a heater which heats the zirconia element. The heater is controlled by the ECM. When the intake air volume is low (the temp. of the exhaust gas is low) current flows to the heater to heat the sensor for accurate oxygen concentration detection.

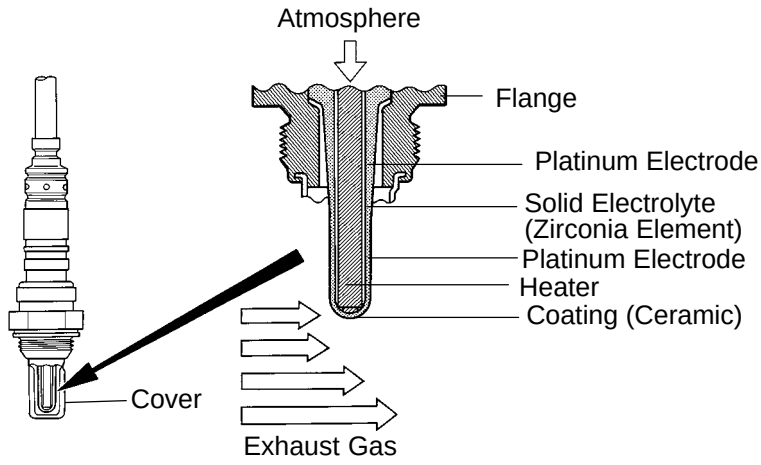

P21242 FI7210

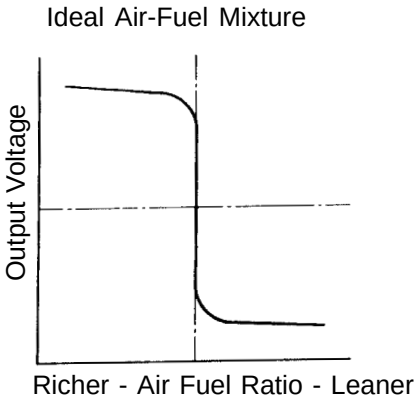

A04485

DTC No.	DTC Detecting Condition	Trouble Area
P0125	After the engine is warmed up, oxygen sensor (bank 1 sensor 1) output does not indicate RICH (≧ 0.45 V) even once when conditions (a), (b), and (c) continue for at least 1.5 min. (a) Engine speed: 1,500 rpm or more (b) Vehicle speed: 40 - 100 km/h (25 - 62 mph) (c) Throttle valve does not fully closed	• Fuel system • Air induction system • Injector • Ignition system • Gas leakage on exhaust system • Open or short in heated oxygen sensor (bank 1 sensor 1) circuit • Heated oxygen sensor (bank 1 sensor 1) • ECM • PCV piping

HINT:
After confirming DTC P0125, use the OBD II scan tool or TOYOTA hand−held tester to confirm voltage output of oxygen sensor (bank 1 sensor 1) from "CURRENT DATA".
If voltage output of oxygen sensor (bank 1 sensor 1) is less than 0.1 V, oxygen sensor (bank 1 sensor 1) circuit may be open or short.

WIRING DIAGRAM

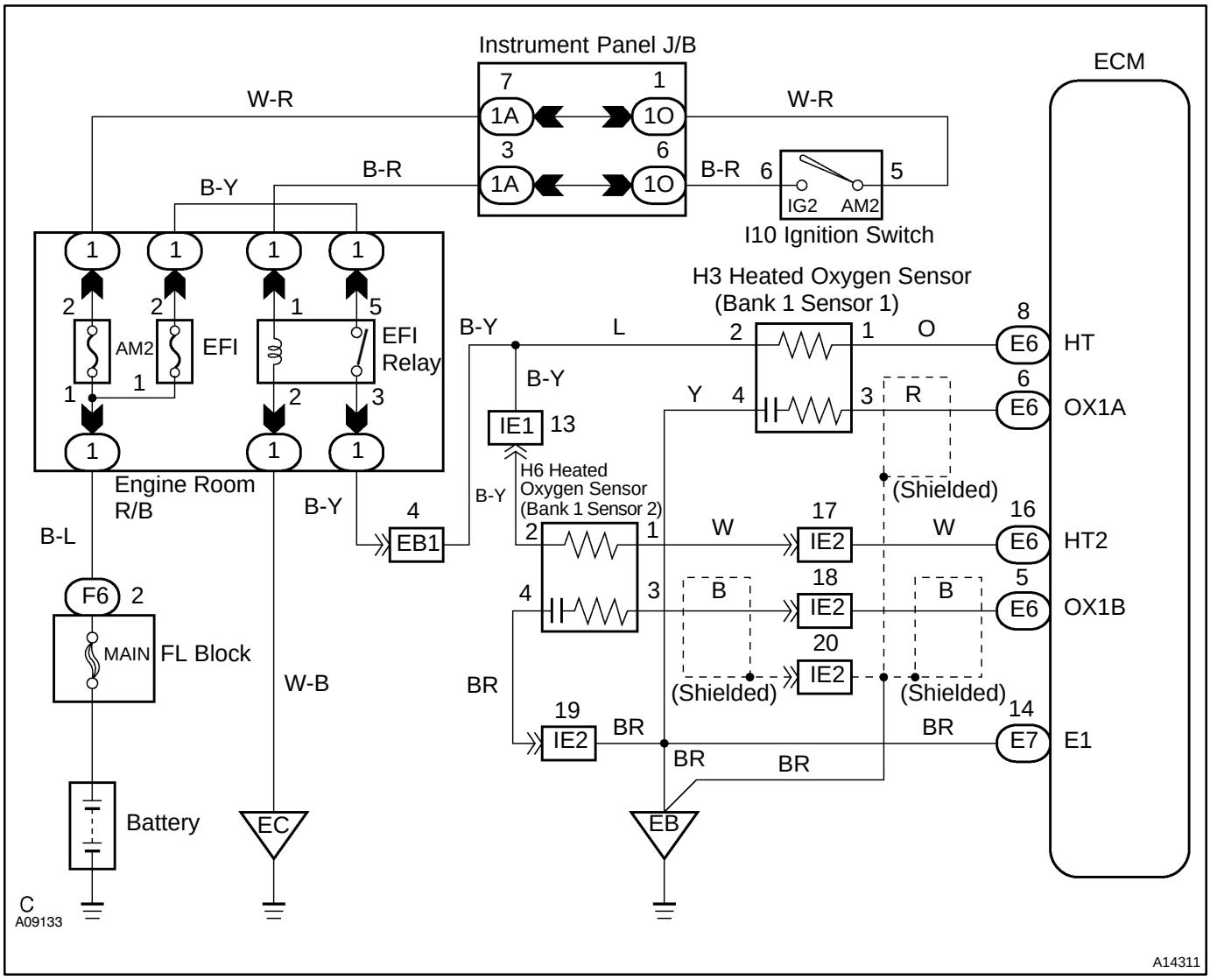

INSPECTION PROCEDURE

HINT:

- If the vehicle run out of fuel, the air-fuel ratio is LEAN and DTC P0125 will be recorded . The MIL then comes on.
- Read freeze frame data using TOYOTA hand-held tester or OBD II scan tool. Because freeze frame records the engine conditions when the malfunction is detected, when troubleshooting it is useful for determining whether the vehicle was running or stopped, the engine warmed up or not, the air-fuel ratio lean or rich, etc at the time of the malfunction.

1	**Are there any other codes (besides DTC P0125) being output ?**

YES → **Go to relevant DTC chart (See page DI-14).**

NO

2	**Check connection of PCV piping.**

NG → **Repair or replace PCV pipng.**

OK

3	**Connect the OBD II scan tool or TOYOTA hand-held tester and read value for voltage output of oxygen sensor (bank 1 sensor 1).**

PREPARATION:

(a) Connect the OBD II scan tool or TOYOTA hand-held tester to the DLC3.

(b) Warm up engine to normal operating temp (above 75˚C).

CHECK:

Read voltage output of the oxygen sensor (bank 1 sensor 1) when engine is suddenly raced.

HINT:

Perform quick racing to 4,000 rpm 3 times using accelerator pedal.

OK:

Both oxygen sensor (bank 1 sensor 1) output a RICH signal (0.45 V or more) at least once.

OK → **Go to step 10.**

NG

4	Check for open and short in harness and connector between ECM and oxygen sensor (bank 1 sensor 1) (See page IN-29).

NG → Repair or replace harness or connector.

OK ↓

5	Check whether misfire is occurred or not by monitoring DTC and data list.

NG → Perform troubleshooting for misfire (See page DI-63).

OK ↓

6	Check air induction system (See page SF-1).

NG → Repair or replace induction system.

OK ↓

7	Check fuel pressure (See page SF-6).

NG → Check and repair fuel pump, fuel pipe line and filter (See page SF-1).

OK ↓

8	Check injector injection (See page SF-21).

NG → Replace injector.

OK ↓

9	Check gas leakade on exhaust system.

NG → Repair or replace.

OK

Replace oxygen sensor (bank 1 sensor 1).

10	Perform confirmation driving pattern (See page DI-48).

Go

11	Is there DTC P0125 being output again?

YES → Check and replace ECM (See page IN-29).

NO

12	Did vehicle runs out of fuel in the past?

NO → Check for intermittent problems.

YES

DTC P0125 is caused by running out of fuel.

DTC	P0130	Oxygen Sensor Circuit Malfunction (Bank 1 Sensor 1)

CIRCUIT DESCRIPTION

Refer to DTC P0125 (Insufficient Coolant Temp. for Closed Loop Fuel Control) on page DI-43 .

DTC No.	DTC Detecting Condition	Trouble Area
P0130	Voltage output of oxygen sensor remains at 0.4 V or more, or 0.55 V or less, during idling after the engine is warmed up (2 trip detection logic)	• Open or short in heated oxygen sensor circuit • Heated oxygen sensor • Air induction system • Fuel pressure • Injector • ECM

HINT:
Sensor 1 refers to the sensor closer to the engine body.
The oxygen sensor's output voltage and the short−term fuel trim value can be read using the OBD II scan tool or TOYOTA hand−held tester.

WIRING DIAGRAM

Refer to DTC P0125 (Insufficient Coolant Temp. for Closed Loop Fuel Control) on page DI-43 for the WIRING DIAGRAM.

CONFIRMATION DRIVING PATTERN

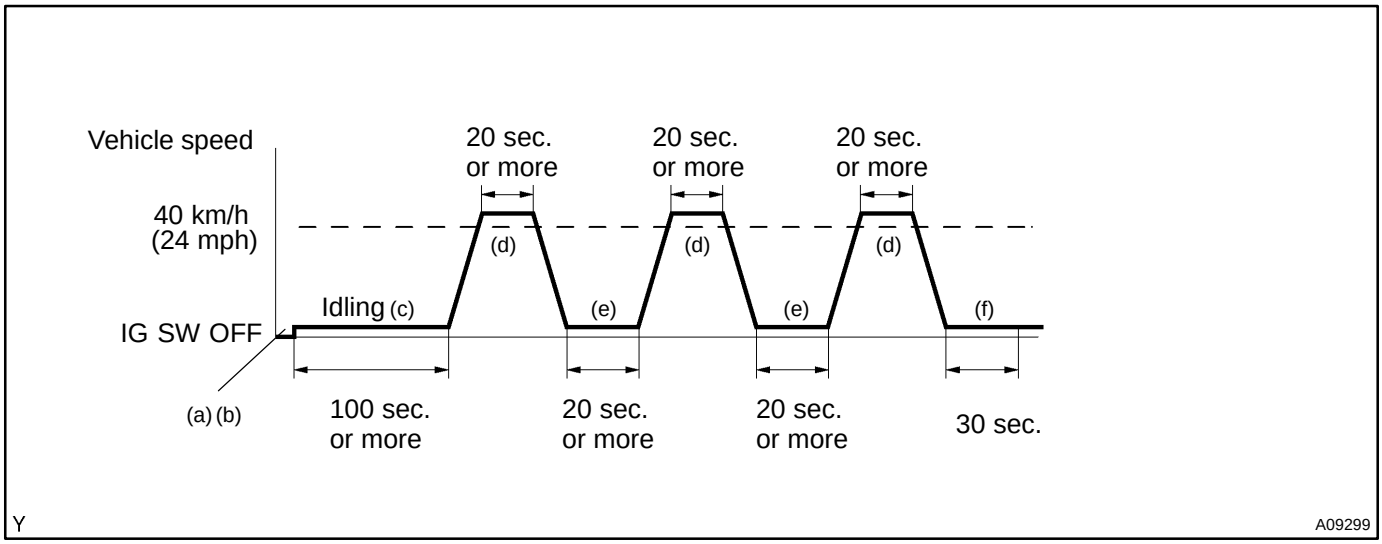

(a) Connect the TOYOTA hand-held tester to the DLC3.
(b) Switch the TOYOTA hand-held tester from normal mode to check mode (See page DI-3).
(c) Start the engine and let the engine idle for 100 sec. or more.
(d) Drive the vehicle at 40 km/h (24 mph) or more for 20 sec. or more.
(e) Let the engine idle for 20 sec. or more.
(f) Let the engine idle for 30 sec.

HINT:
If a malfunction exists, the MIL will light up during step (f).

NOTICE:
If the conditions in this test are not strictly followed, detection of the malfunction will not be possible.
If you do not have a TOYOTA hand-held tester, turn the ignition switch OFF after performing steps (c) to (f), then perform steps (c) to (f) again.

INSPECTION PROCEDURE

HINT:
Read freeze frame data using TOYOTA hand-held tester or OBD II scan tool. Because freeze frame records the engine conditions when the malfunction is detected, when troubleshooting it is useful for determining whether the vehicle was running or stopped, the engine warmed up or not, the air-fuel ratio lean or rich, etc. at the time of the malfunction.

1	**Are there any other codes (besides DTC P0130) being output?**

YES → **Go to relevant DTC chart (See page DI-14).**

NO

2	**Check the output voltage of oxygen sensor during idling.**

PREPARATION:

Warm up the oxygen sensor the engine at 2,500 rpm for approx. 90 sec.

CHECK:

Use the OBD II scan tool or TOYOTA hand-held tester read the output voltage of the oxygen sensor during idling.

OK:

Oxygen sensor output voltage:

Alternates repeatedly between less than 0.4 V and more than 0.55 V (See the Following table).

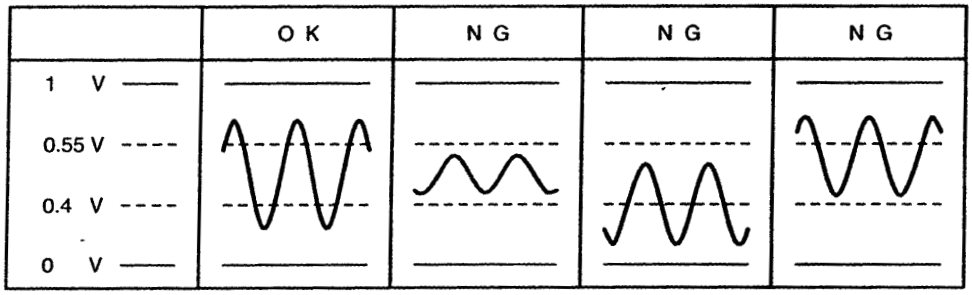

P18349

OK → **Perform confirmation driving pattern (See page DI-48).**

NG

3	**Check for open and short in harness and connector between ECM and oxygen sensor (bank 1 sensor 1) (See page IN-19).**

NG → **Repair or replace harness or connector.**

OK

4	**Check air induction system (See page SF-1).**

NG → **Repair or replace induction system.**

OK

5	Check fuel pressure (See page SF-6).

NG → Check and repair fuel pump, fuel pipe line and filter (See page SF-1).

OK

6	Check injector injection (See page SF-21).

NG → Replace injector.

OK

Replace oxygen sensor (bank 1 sensor 1).

7	Perform confirmation driving pattern (See page DI-48).

Go

8	Are there DTC P0130 being output again?

YES → Check for intermittent problems (See page DI-3).

NO

Check and replace ECM (See apge IN-29).

DTC	P0133	Oxygen Sensor Circuit Slow Responce (Bank 1 Sensor 1)

CIRCUIT DESCRIPTION

Refer to DTC P0125 (Insufficient Coolant Temp. for Closed Loop Fuel Control) on page DI-43 .

DTC No.	DTC Detecting Condition	Trouble Area
P0133	Response time for the oxygen sensor's voltage output to-change from rich to lean, or from lean to rich, is 1 sec. or more during idling after the engine is warmed up (2 trip detection logic)	• Open or short in heated oxygen sensor circuit • Heated oxygen sensor • Air induction system • Fuel pressure • Injector • ECM

HINT:
Sensor 1 refers to the sensor closer to the engine body.

INSPECTION PROCEDURE

HINT:
Read freeze frame data using TOYOTA hand-held tester or OBD II scantool. Because freeze frame records the engine conditions when the malfunction is detected, when troubleshooting it is useful for determining whether the vehicle was running or stopped, the engine warmed up or not, the air-fuel ratio lean or rich, etc. at the time of the malfunction.

1	**Are there any other codes (besides DTC P0133) being output?**

YES → **Go to relevant DTC chart (See page DI-14).**

NO

2	**Check the output voltage of oxygen sensor during idling.**

PREPARATION:

Warm up the oxygen sensor the engine at 2,500 rpm for approx. 90 sec.

CHECK:

Use the OBD II scan tool or TOYOTA hand-held tester read the output voltage of the oxygen sensor during idling.

OK:

Oxygen sensor output voltage:

Alternates repeatedly between less than 0.4 V and more than 0.55 V (See the Following table).

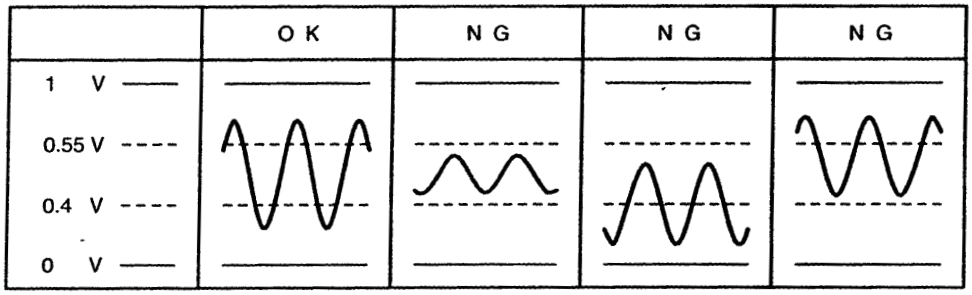

P18349

OK → **Perform confirmation driving pattern (See page DI-48).**

NG

3	**Check for open and short in harness and connector between ECM and oxygen sensor (bank 1 sensor 1) (See page IN-19).**

NG → **Repair or replace harness or connector.**

OK

4	**Check air induction system (See page SF-1).**

NG → **Repair or replace induction system.**

OK

5	Check fuel pressure (See page SF-6).

NG → Check and repair fuel pump, fuel pipe line and filter (See page SF-1).

OK ↓

6	Check injector injection (See page SF-21).

NG → Replace injector.

OK ↓

Replace oxygen sensor (bank 1 sensor 1).

7	Perform confirmation driving pattern (See page DI-48).

Go ↓

8	Are there DTC P0133 being output again?

YES → Check for intermittent problems (See page DI-3).

NO ↓

Check and replace ECM (See page IN-29).

DTC	P0135	Heated Oxygen Sensor Heater Circuit Malfunction (Bank1 Sensor1)

DTC	P0141	Heated Oxygen Sensor Heated Circuit Malfunction (Bank1 Sensor2)

CIRCUIT DESCRIPTION

Refer to DTC P0125 (Insufficient Coolant Temp. for Closed Loop Fuel Control) on page DI-43 .

DTC No.	DTC Detecting Condition	Trouble Area
P0135 P0141	When the heater operates, heater current exceeds 2 A (2 trip detection logic)	• Open or short in heater circuit of heated oxygen sensor • Heated oxygen sensor heater • ECM
	Heater current of 0.2 A or less when the heater operates (2 trip detection logic)	

HINT:

- Bank 1 refers to the bank that includes cylinder No.1.
- Sensor 1 refers to the sensor closer to the engine body.
- Sensor 2 refers to the sensor farther away from the engine body.

WIRING DIAGRAM

Refer to DTC P0125 on page DI-43 for the WIRING DIAGRAM.

INSPECTION PROCEDURE

HINT:

Read freeze frame data using TOYOTA hand-held tester or OBD II scan tool. Because freeze frame records the engine conditions when the malfunction is detected, when troubleshooting it is useful for determining whether the vehicle was running or stopped, the engine warmed up or not, the air-fuel ratio lean or rich, etc. at the time of the malfunction.

1	**Check voltage between terminals HT, HT2 of ECM connectors and body ground.**

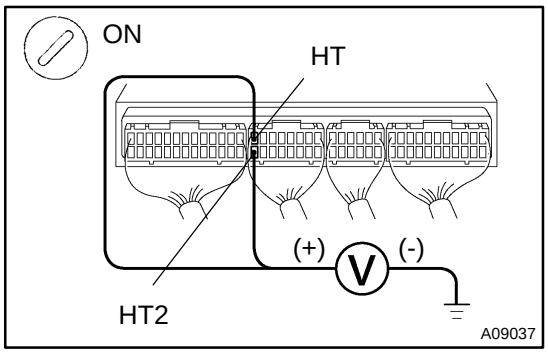

PREPARATION:

(a) Remove the connector cover from the ECM.

(b) Turn the ignition switch ON.

CHECK:

Measure voltage between terminals HT, HT2 of ECM connectors and body ground.

HINT:

- Connect terminal HT to bank 1 sensor 1.
- Connect terminal HT2 to bank 1 sensor 2.

OK:

Voltage: 9 - 14 V

OK	**Check and replace ECM (See page IN-29).**

NG

2	**Check resistance of heated oxygen sensor heater (See page SF-60).**

NG	**Replace heated oxygen sensor.**

OK

Check and repair harness or connector between EFI main relay (Marking: EFI), heated oxygen sensor and ECM (See page IN-29).

DTC	P0136	Oxygen Sensor Circuit Malfunction (Bank 1 Sensor 2)

CIRCUIT DESCRIPTION

Refer to DTC P0125 (Insufficient Coolant Temp. for Closed Loop Fuel Control) on page DI-43 .

DTC No.	DTC Detecting Condition	Trouble Area
P0136	Voltage output of the heated oxygen sensor remains at 0.40 V or more, or 0.50 V or less when the vehicle is driven at 40 km/h (25 mph) or more after the engine is warmed up. (2 trip detection logic).	• Open or short in heated oxygen sensor circuit • Heated oxygen sensor

HINT:
Sensor 2 refers to the sensor farther away from the engine body.

WIRING DIAGRAM

Refer to DTC P0125 (Insufficient Coolant Temp. for Closed Loop Fuel Control) on page DI-43 for the WIRING DIAGRAM.

CONFIRMATION DRIVING PATTERN

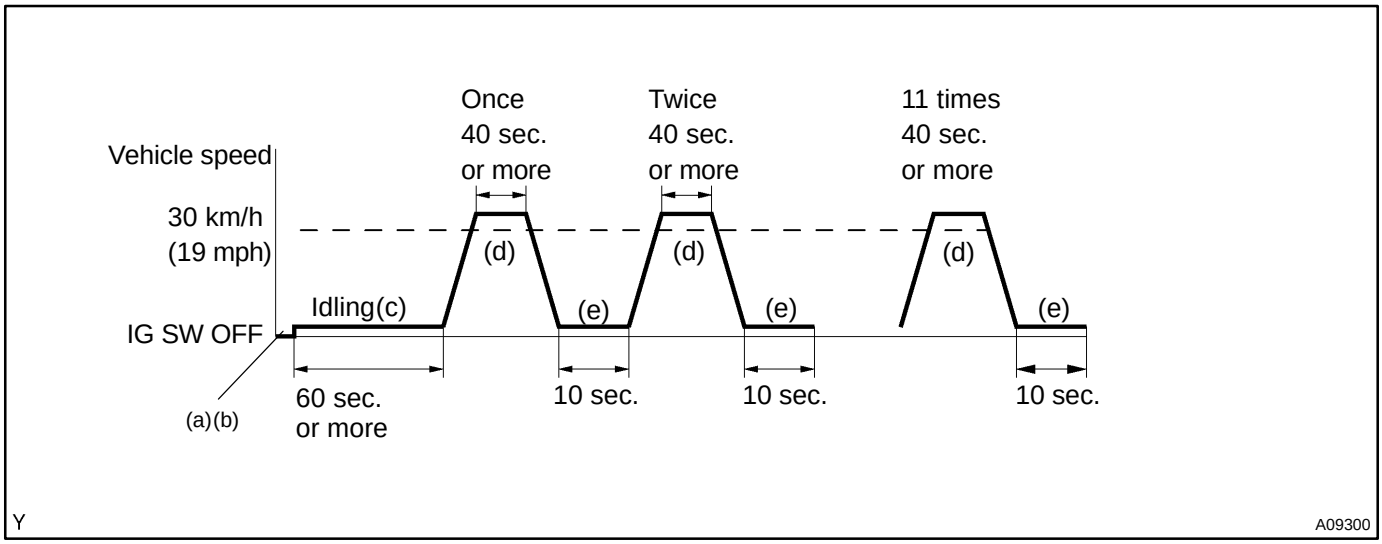

(a) Connect the hand-held tester to the DLC3.
(b) Switch the hand-held tester from the Normal Mode to the Check (Test) Mode (See page DI-3).
(c) Start the engine and let the engine idle for 60 seconds or more.
(d) Drive the vehicle at 30 km/h (18 mph) or more for 40 seconds or more.
(e) Let the engine idle for 10 seconds or more.
(f) Preform steps (d) to (e) 11 times.

HINT:
If a malfunction exists, the CHK ENG (MIL) will be indicated on the multi information display during step (f).

NOTICE:
If the conditions in this test are not strictly followed, detection of the malfunction will not be possible.
If you do not have a hand-held tester, turn the ignition switch OFF after performing steps (c) to (f), then perform steps (c) to (f) again.

INSPECTION PROCEDURE

HINT:
Read freeze frame data using TOYOTA hand-held tester or OBD II scan tool. Because freeze frame records the engine conditions when the malfunction is detected, when troubleshooting it is useful for determining whether the vehicle was running or stopped, the engine warmed up or not, the air-fuel ratio lean or rich, etc. at the time of the malfunction.

1	**Are there any other codes (besides DTC P0136) being output?**

YES → **Go to relevant DTC chart.**

NO

2	**Check for open and short in harness and connector between ECM and oxygen sensor (See page IN-29).**

NG → **Repair or replace harness or connector.**

OK

3	**Check output voltage of oxygen sensor.**

PREPARATION:
(a) Connect the OBD II scan tool or TOYOTA hand-held tester to the DLC3.
(b) Warm up the engine to normal operating temp.
CHECK:
Read voltage output of oxygen sensor when engine suddenly raced.
HINT:
Perform quick racing to 4,000 rpm 3 min. using accelerator pedal.
OK:
Oxygen sensor output voltage: Alternates from 0.40 V or less to 0.50 V or more.

OK → **Check that each connector is properly connected.**

NG

Replace oxygen sensor.

DI6V7-04

DTC	P0171	System too Lean (Fuel Trim)

CIRCUIT DESCRIPTION

Fuel trim refers to the feedback compensation value compared against the basic injection time. Fuel trim includes short-term fuel trim and long-term fuel trim.
Short-term fuel trim is the short-term fuel compensation used to maintain the air-fuel ratio at its ideal theoretical value. The signal from the oxygen sensor indicates whether the air-fuel ratio is RICH or LEAN compared to the ideal theoretical value, triggering a reduction in fuel volume if the air-fuel ratio is rich, and an increase in fuel volume if it is lean.
Long-term fuel trim is overall fuel compensation carried out long-term to compensate for continual deviation of the short-term fuel trim from the central value due to individual engine differences, wear over time and changes in the usage environment.
If both the short-term fuel trim and long-term fuel trim are LEAN or RICH beyond a certain value, it is detected as a malfunction and the MIL lights up.

DTC No.	DTC Detecting Condition	Trouble Area
P0171	When the air-fuel ratio feedback is stable after engine warming up, the fuel trim is considerably in error on the RICH side (2 trip detection logic)	• Air induction system • Injector blockage • Mass air flow meter • Engine coolant temp. sensor • Fuel pressure • Gas leakage on exhaust system • Open or short in heated oxygen sensor (bank 1 sensor 1) circuit • Heated oxygen sensor (bank 1 sensor 1) • PCV piping

HINT:

- If the vehicle runs out of fuel, the air-fuel ratio is LEAN and DTC P0171 is recorded. The MIL then comes on.
- If the total of the short-term fuel trim value and long-term fuel trim value is within ± 38 %, the system is functioning normally.
- The oxygen sensor output voltage and the short-term fuel trim value can be read using the OBD II scan tool or TOYOTA hand-held tester.

INSPECTION PROCEDURE

HINT:
Read freeze frame data using TOYOTA hand-held tester or OBD II scan tool. Because freeze frame records the engine conditions when the malfunction is detected, when troubleshooting it is useful for determining whether the vehicle was running or stopped, the engine warmed up or not, the air-fuel ratio lean or rich, etc. at the time of the malfunction.

1	**Check air induction system (See page SF-1).**

NG → **Repair or replace.**

OK

2	Check connection of PCV piping.

NG → Repair or replace PCV piping.

OK

3	Check injector injection (See page SF-21).

NG → Replace injector.

OK

4	Check mass air flow meter and engine coolant temp. sensor (See page SF-30 , SF-54).

NG → Repair or replace.

OK

5	Check for spark and ignition (See page IG-1).

NG → Repair or replace.

OK

6	Check fuel pressure (See page SF-6).

NG → Check and repair fuel pump, pressure regulator, fuel pipe line and filter.

OK

7	**Check gas leakade on exhaust system.**

NG → **Repair or replace.**

OK

8	**Check the output voltage of oxygen sensor during idling.**

PREPARATION:

Warm up the oxygen sensor the engine at 2,500 rpm for approx. 90 sec.

CHECK:

Use the OBD II scan tool or TOYOTA hand-held tester read the output voltage of the oxygen sensor during idling.

OK:

Oxygen sensor output voltage:

Alternates repeatedly between less than 0.4 V and more than 0.55 V (See the following table).

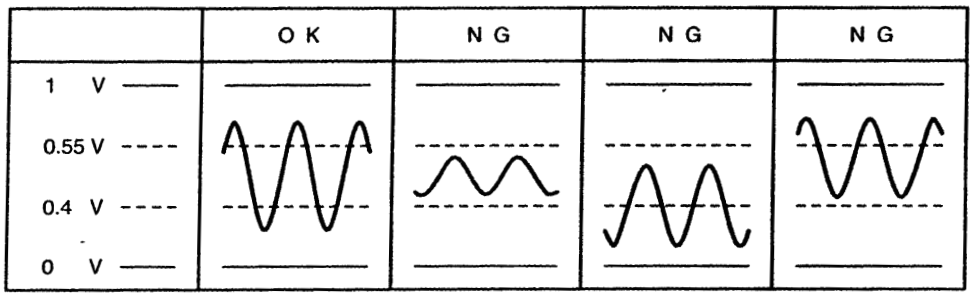

OK → **Go to step 10.**

NG

9	Check for open and short in harness and connector between ECM and oxygen sensor (See page IN-19).

NG → Repair or replace harness or connector.

OK

Replace oxygen sensor.

10	Perform confirmation driving pattern (See page DI-48).

GO

11	Is there DTC P0171 being output again?

YES → Check and replace ECM (See page IN-29).

NO

12	Did vehicle runs out of fuel in the past?

NO → Check for intermittent problems.

YES

DTC P0171 or P0172 is caused by running out of fuel.

DI6V8-05

DTC	P0300	Random/Multiple Cylinder Misfire Detected

DTC	P0301	Cylinder 1 Misfire Detected

DTC	P0302	Cylinder 2 Misfire Detected

DTC	P0303	Cylinder 3 Misfire Detected

DTC	P0304	Cylinder 4 Misfire Detected

CIRCUIT DESCRIPTION

Misfire: The ECM uses the crankshaft position sensor and camshaft position sensor to monitor changes in the crankshaft rotation for each cylinder.
The ECM counts the number of times the engine speed change rate indicates that misfire has occurred. And when the misfire rate equals or exceeds the count indicating that the engine condition has deteriorated, the MIL lights up.
If the misfire rate is high enough and the driving conditions will cause catalyst overheating, the MIL blinks when misfiring occurs.

DTC No.	DTC Detecting Condition	Trouble Area
P0300 P0301 P0302 P0303 P0304	Misfiring of random cylinders is detected during any particular 200 or 1,000 revolutions For any particular 200 revolutions for the engine, misfiring is detected which can cause catalyst overheating (This causes MIL to blink)	• Open or short in engine wire • Connector connection • Vacuum hose connection • Ignition system • Injector • Fuel pressure • Manifold absolute pressure sensor • Engine coolant temp. sensor • Compression pressure • Valve clearance • Valve timing • ECM • PCV piping

HINT:
When the 2 or more codes for a misfiring cylinder are recorded repeatedly but no random misfire code is recorded, it indicates that the misfires were detected and recorded at different times.

WIRING DIAGRAM

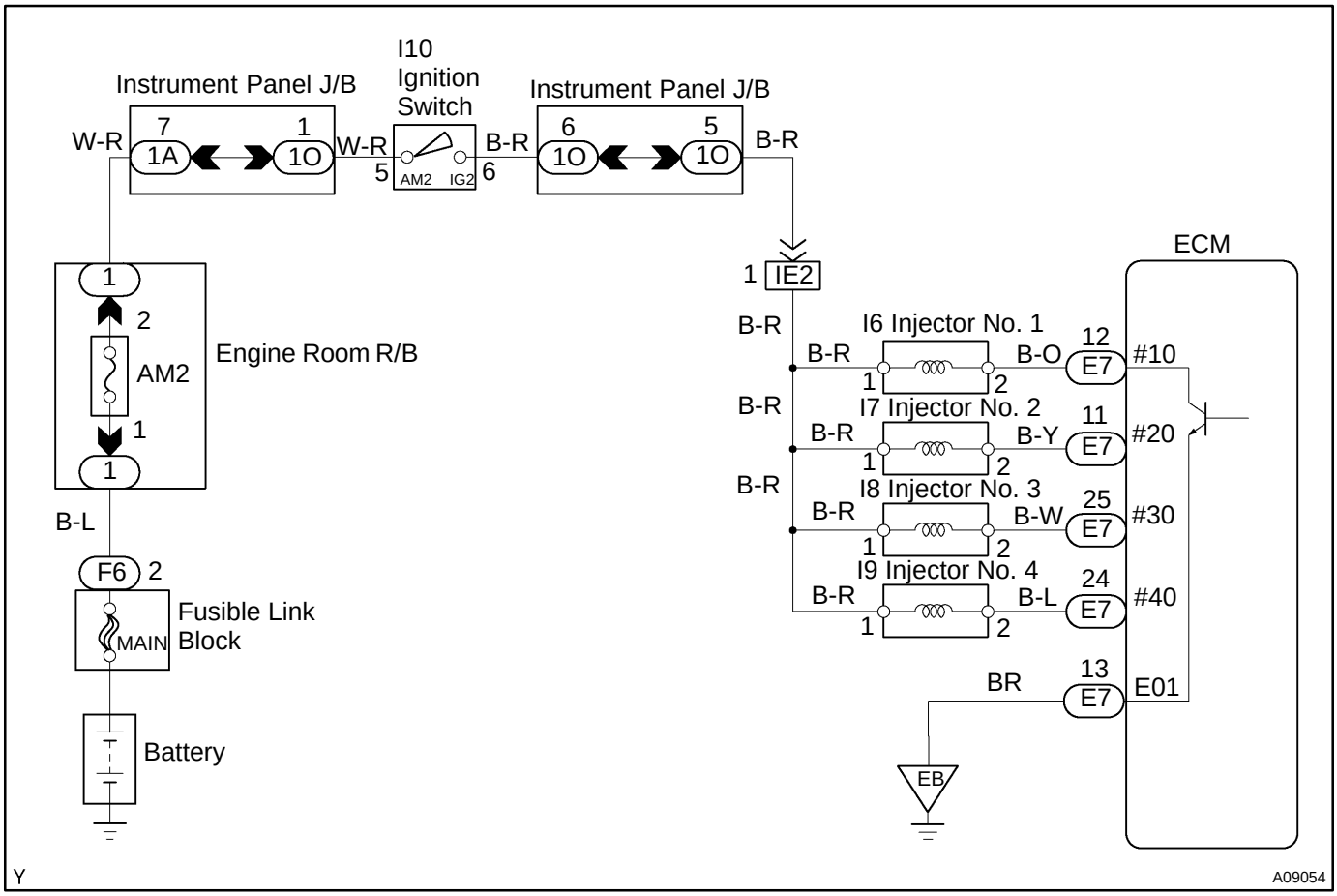

CONFIRMATION DRIVING PATTERN

(1) Connect the TOYOTA hand-held tester or OBD II scan tool.
(2) Record DTC and the freeze frame data.
(3) Use the TOYOTA hand-held tester to set to Check Mode. (See page DI-3)
(4) Drive the vehicle several times with the engine speed, load and its surrounding range shown with ENGINE SPD, CALC LOAD in the freeze frame data or MISFIRE RPM, MISFIRE LOAD in the data list. If you have no TOYOTA hand-held tester, turn the ignition switch OFF after the symptom is simulated the first time. Then repeat the simulation process again.

HINT:
In order to memorize DTC of misfire, it is necessary to drive around MISFIRE RPM, MISFIRE LOAD in the data list for the following period of time.

Engine Speed	Time
Idling	3 minutes 30 seconds or more
1000 rpm	3 minutes or more
2000 rpm	1 minute 30 seconds or more
3000 rpm	1 minute or more

(5) Check whether there is misfire or not by monitoring DTC and the freeze frame data. After that, record them.
(6) Turn ignition switch OFF and wait at least 5 seconds.

INSPECTION PROCEDURE

HINT:

- If is the case that DTC besides misfire is memorized simultaneously, first perform the troubleshooting for them.
- Read freeze frame data using TOYOTA hand-held tester or OBD II scan tool. Because freeze frame data records the engine conditions when the malfunction is detected, when troubleshooting it is useful for determining whether the vehicle was running or stopped, the engine warmed up or not, the air-fuel ratio lean or rich, etc. at the time of the malfunction.
- When the vehicle is brought to the workshop and the misfire is not occurred, misfire can be confirmed by reproducing the condition or freeze frame data. Also, after finishing the repair, confirm that there is no misfire. (See the confirmation driving pattern)
- When either of SHORT FT #1, LONG FT #1, SHORT FT #2 or LONG FT #2 in the freeze frame data is besides the range of ±20%, there is a possibility that the air-fuel ratio is inclining either to ”rich” (-20% or less) or ”lean” (+20% or more).
- When COOLANT TEMP in the freeze frame data is less than 80˚C (176˚F), there is a possibility or misfire only during warming up.
- In the case that misfire cannot be reproduced, the reason may be because of the driving with lack or fuel, the use of improper fuel, a stain of ignition plug, and etc.

1	**Check wire harness, connector and vacuum hose in engine room.**

CHECK:

(a) Check the connection conditions of wire harness and connector.

(b) Check the disconnection, piping and break of vacuum hose.

NG → **Repair or replace, then confirm that there is no misfire. (See the confirmation driving pattern)**

OK

2	**Check connection of PCV piping.**

NG → **Repair or replace PCV piping.**

OK

3	Check spark plug and spark of misfiring cylinder.

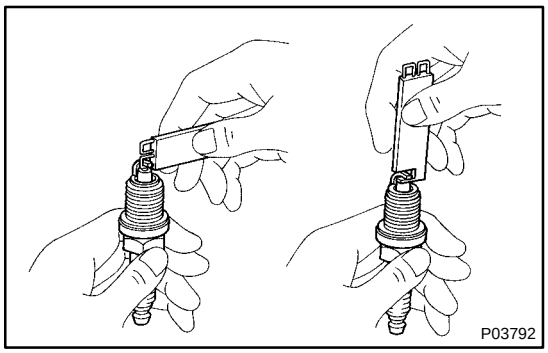

PREPARATION:
Remove the spark plug (See page IG-1).
CHECK:
(a) Check for carbon deposits on electrode.
(b) Check electrode gap.
OK:
(a) No large carbon deposit present.
Not wet with gasoline or oil.
(b) Electrode gap: 1.1 mm (0.043 in.)
PREPARATION:
(a) Install the spark plug to ignition coil and connect the ignition coil connector to ignition coil.
(b) Disconnect the injector connector.
(c) Ground spark plug.
CHECK:
Check if spark occurs while engine is being cracked.
NOTICE:
To prevent excess fuel being injected from the injectors during this test, don't crank the engine for more than 5 - 10 seconds at a time.
OK:
Spark jumps across electrode gap.

NG	Replace or check ignition system (See page IG-1).

OK

4	Check voltage of ECM terminal for injector of failed cylinder.

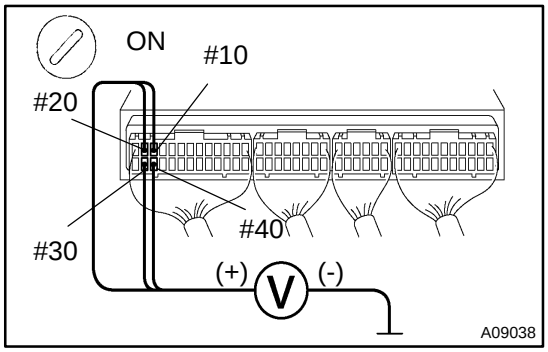

PREPARATION:
(a) Remove the connector cover from the ECM.
(b) Turn the ignition switch ON.
CHECK:
Measure voltage between applicable terminal of the ECM connector and body ground.
OK:
Voltage: 9 - 14 V

Reference: INSPECTION USING OSCILLOSCOPE
INJECTOR SIGNAL WAVEFORM
With the engine idling, measure between terminals #10 ~ #40 and E01 of the ECM connector.

HINT:
The correct waveforms are shown.

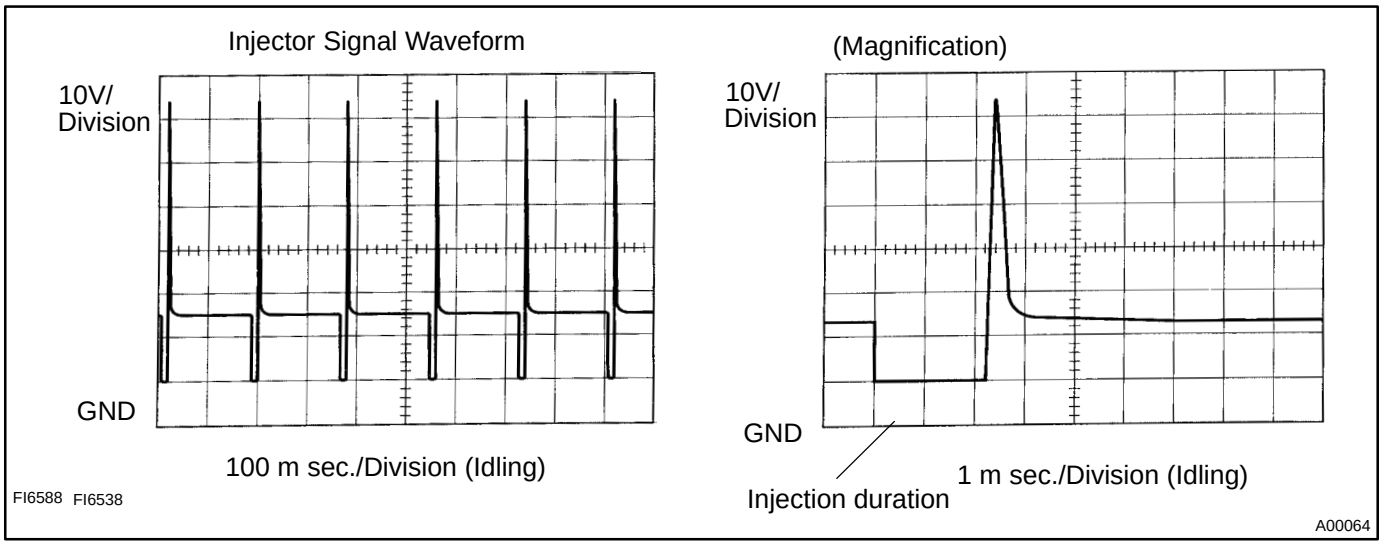

OK	Go to step 6.

NG

5	Check resistance of injector of misfiring cylinder (See page SF-18).

NG	Replace injector.

OK

Check for open and short in harness and connector between injector and ECM (See page IN-29).

6	Check fuel pressure (See page SF-6).

NG	Check and repair fuel pump, pressure regulator, fuel pipe line and filter.

OK

7	Check injector injection (See page SF-21).

NG → Replace injector.

OK

8	Check mass air flow merer and engine coolant temp. sensor (See page SF-30 , SF-54).

NG → Repair or replace.

OK

Check compression pressure, valve clearance and valve timing (See page EM-3 , EM-5 , EM-20).

DI6V9-04

DTC	P0325	Knock Sensor 1 Circuit Malfunction

CIRCUIT DESCRIPTION

The knock sensor is fitted to the cylinder block to detect engine knocking. This sensor contains a piezoelectric element which generates a voltage when it becomes deformed, which occurs when the cylinder block vibrates due to knocking. If engine knocking occurs, ignition timing is retarded to suppress it.

DTC No.	DTC Detecting Condition	Trouble Area
P0325	No knock sensor 1 signal to ECM with engine speed, 2,000 rpm or more	• Open or short in knock sensor 1 circuit • Knock sensor 1 (looseness) • ECM

HINT:
If the ECM detects above diagnosis conditions, it operates the fail safe function in which the corrective retard angle value is set to the maximum value.

WIRING DIAGRAM

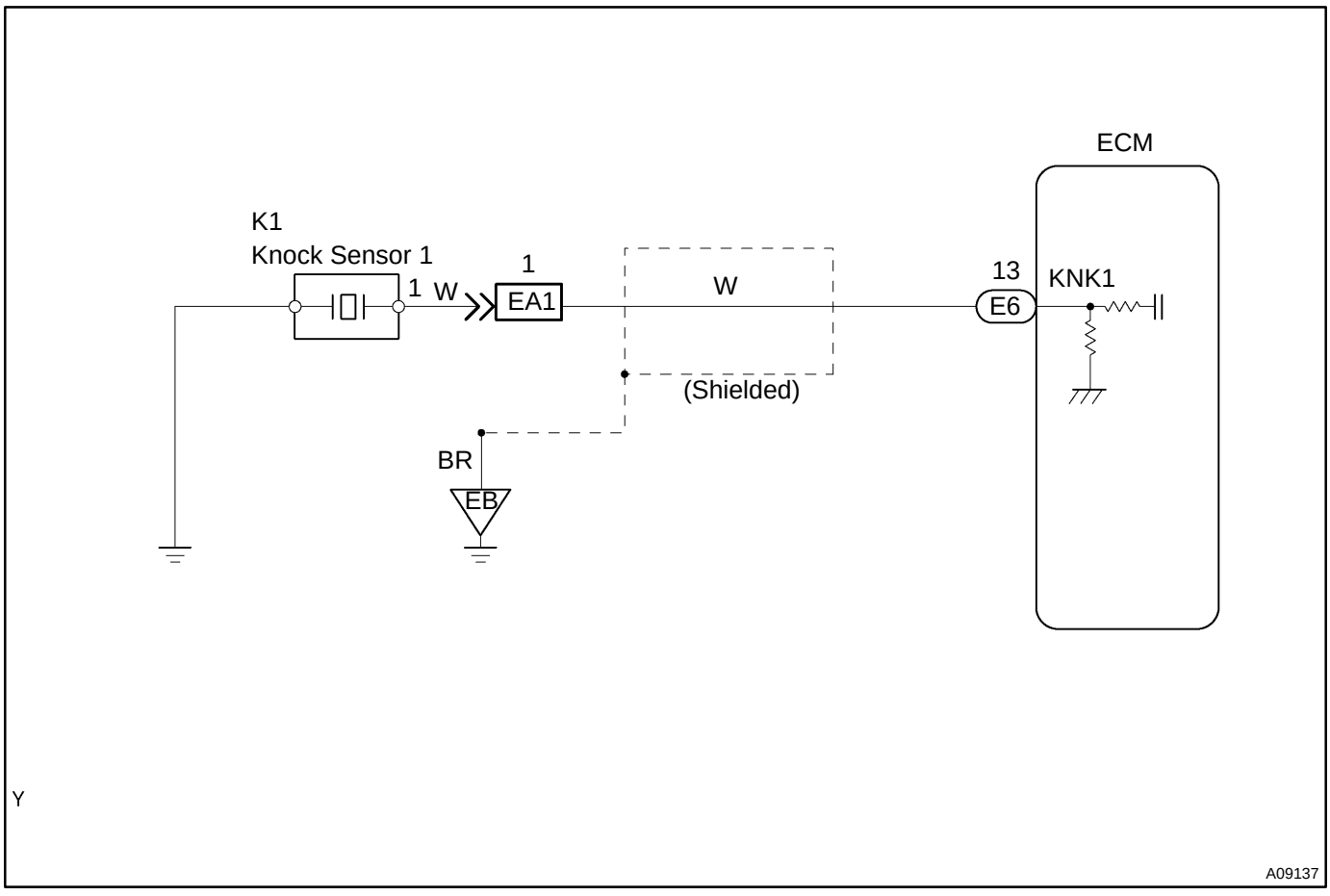

INSPECTION PROCEDURE

HINT:
Read freeze frame data using TOYOTA hand-held tester or OBD II scan tool. Because freeze frame records the engine conditions when the malfunction is detected, when troubleshooting it is useful for determining whether the vehicle was running or stopped, the engine warmed up or not, the air-fuel ratio lean or rich, etc. at the time of the malfunction.

1	**Check continuity between terminal KNK1 of ECM connector and body ground.**

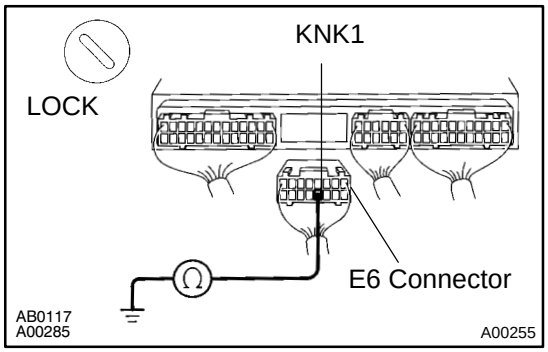

PREPARATION:
(a) Remove the connector cover from the ECM.
(b) Disconnect the E6 connector of the ECM.

CHECK:
Measure resistance between terminal KNK1 of the ECM connector and body ground.

OK:
Resistance: 1 MΩ or higher

OK → **Go to step 3.**

NG

2	**Check knock sensor 1 (See page SF-58).**

NG → **Replace knock sensor 1.**

OK

3	**Check for open and short in harness and connector between ECM and knock sensor 1 (See page IN-29).**

NG → **Repair or replace harness or connector.**

OK

4	**Does malfunction disappear when a good knock sensor 1 is installed?**

YES → **Replace knock sensor 1.**

NO

Check and replace ECM (See page IN-29).

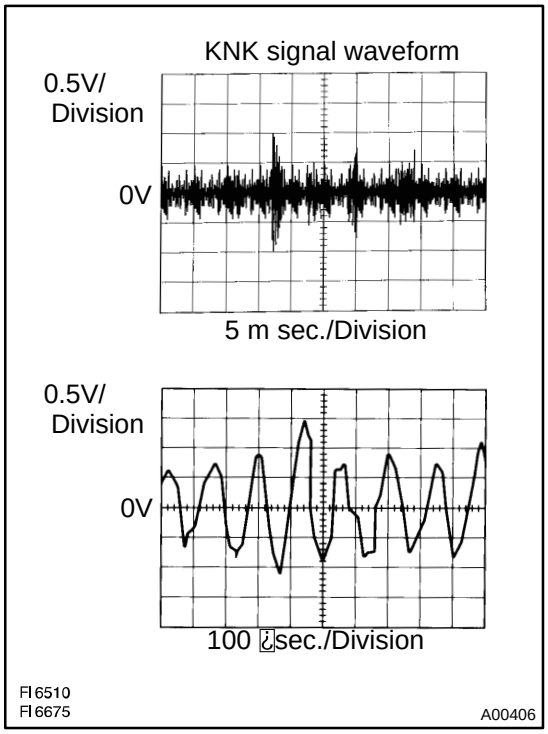

Reference: INSPECTION USING OSCILLOSCOPE

- With the engine racing (4,000 rpm) measure between terminal KNK of the ECM connector and body ground.

HINT:
The correct waveforms are as shown.

- Spread the time on the horizontal axis, and confirm that period of the wave is 132 µ sec.
  (Normal mode vibration frequency of knock sensor: 7.6 kHz)

HINT:
If normal mode vibration frequency is not 7.6 kHz the sensor is malfunctioning.

DI6VA-04

DTC	P0335	Crankshaft Position Sensor ”A” Circuit Malfunction

CIRCUIT DESCRIPTION

Crankshaft position sensor (NE signal) consist of a signal plate and pick up coil.
The NE signal plate has 34 teeth and is mounted on the crankshaft. The NE signal sensor generates 34 signals of every engine revolution. The ECM detects the standard crankshaft angle based on the G2 signals, and the actual crankshaft angle the engine speed by the NE signals.

DTC No.	DTC Detecting Condition	Trouble Area
P0335	No crankshaft position sensor signal to ECM during cranking. (2 trip detection logic)	• Open or short in crankshaft position sensor circuit. • Crankshaft position sensor • Signal plate (Timing belt guide) • Crankshaft timing pulley • ECM
	No crankshaft position sensor signal to ECM with engine speed 600 rpm or more (2 trip detection logic)	

WIRING DIAGRAM

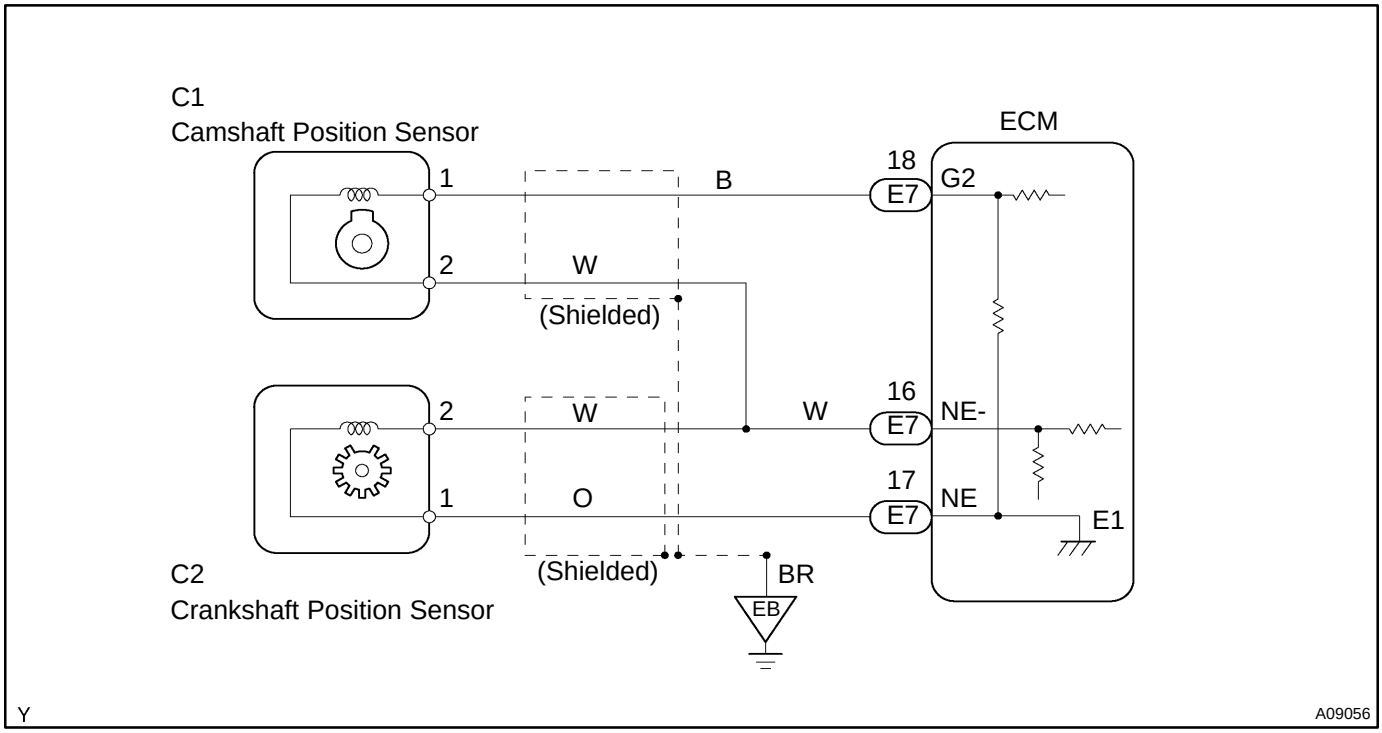

INSPECTION PROCEDURE

HINT:

- Perform troubleshooting of DTC 335 1st. If notrouble is found, troubleshoot the following mechanical system.
- Read freeze frame data using TOYOTA hand-held tester or OBD II scan tool. Because freeze frame records the engine conditions when the malfunction is detected, when troubleshooting it is useful for determining whether the vehicle was running or stopped, the engine warmed up or not, the air-fuel ratio lean or rich, etc. at the time of the malfunction.

1	**Check resistance of crankshaft position sensor (See page IG-1).**

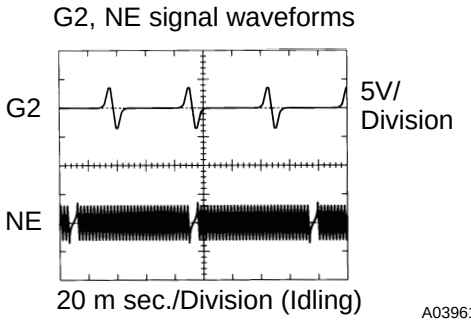

Reference: INSPECTION USING OSCILLOSCOPE
During cranking or idling, check between terminals G2 and NE-, NE and NE- of the ECM
HINT:
The correct waveforms are as shown.

NG → **Replace crankshaft position sensor.**

OK

2	**Check for open and short in harness and connector between ECM and crankshaft position sensor (See page IN-29).**

NG → **Repair or replace harness or connector.**

OK

3	**Inspect crankshaft position sensor installation and teeth of crankshaft timing pulley (See page IG-1 1, EM-13).**

NG → **Tighten the sensor.**
Replace crankshaft timing pulley.

OK

Check and replace ECM (See page IN-29).

DI6VB-01

DTC	P0340	Camshaft Position Sensor Circuit Malfunction

CIRCUIT DESCRIPTION

Camshaft position sensor (G22 signal) consist of signal plate and pick up coil.
The G22 signal plate has one tooth on its outer circumference and is mounted on the exhaust camshaft. When the camshafts rotate, the protrusion on the signal plate and the air gap on the pick up coil change, causing fluctuations in the magnetic field and generating an electromotive force in the pick up coil.
The NE signal plate has 34 teeth and is mounted on the crankshaft. The NE signal sensor generates 34 signals for every engine revolution. The ECM detects the standard crankshaft angle based on the G22 signals and the actual crankshaft angle and the engine speed by the NE signals.

DTC No.	DTC Detecting Condition	Trouble Area
P0340	No camshaft position sensor signal to ECM during cranking. (2 trip detection logic)	• Open or short in camshaft position sensor circuit • Camshaft position sensor • Camshaft timing pulley • ECM
	No camshaft position sensor signal to ECM with engine speed 600 rpm or more	

WIRING DIAGRAM

Refer to DTC P0335 (Crankshaft Position Sensor ”A” Circuit Malfunction) on page DI-72 for the WIRING DIAGRAM.

INSPECTION PROCEDURE

HINT:
Read freeze frame data using TOYOTA hand-held tester or OBD II scan tool. Because freeze frame records the engine conditions when the malfunction is detected, when troubleshooting it is useful for determining whether the vehicle was running or stopped, the engine warmed up or not, the air-fuel ratio lean or rich, etc. at the time of the malfunction.

1	**Check resistance of camshaft position sensor (Signal generator) (See page IG-1).**

Reference: INSPECTION USING OSCILLOSCOPE
Refer to DTC P0335 (Crankshaft Position Sensor ”A” Circuit Malfunction) on page DI-72 for the INSPECTION USING OSCILLOSCOPE.

NG → **Replace camshaft position sensor.**

OK

2	Check for open and short in harness and connector between ECM and camshaft position sensor (See page IN-29).

NG → Repair or replace harness or connector.

OK

3	Inspect sensor installation and tooth of camshaft timing pulley (See page EM-15).

NG → Tighten the sensor.
Replace camshaft timing pulley.

OK

Check and replace ECM (See page IN-29).

DI6VC-04

DTC	P0420	Catalyst System Efficiency Below Threshold

CIRCUIT DESCRIPTION

The ECM compares the waveform of the oxygen sensor located before the catalyst with the waveform of the oxygen sensor located behind the catalyst to determine whether or not catalyst performance has deteriorated.
Air-fuel ratio feedback compensation keeps the waveform of the oxygen sensor before the catalyst repeatedly changing back and forth from rich to lean.
If the catalyst is functioning normally, the waveform of the oxygen sensor behind the catalyst switches back and forth between rich and lean much more slowly than the waveform of the oxygen sensor before the catalyst.
But when both waveforms change at a similar rate, it indicates that catalyst performance has deteriorated.

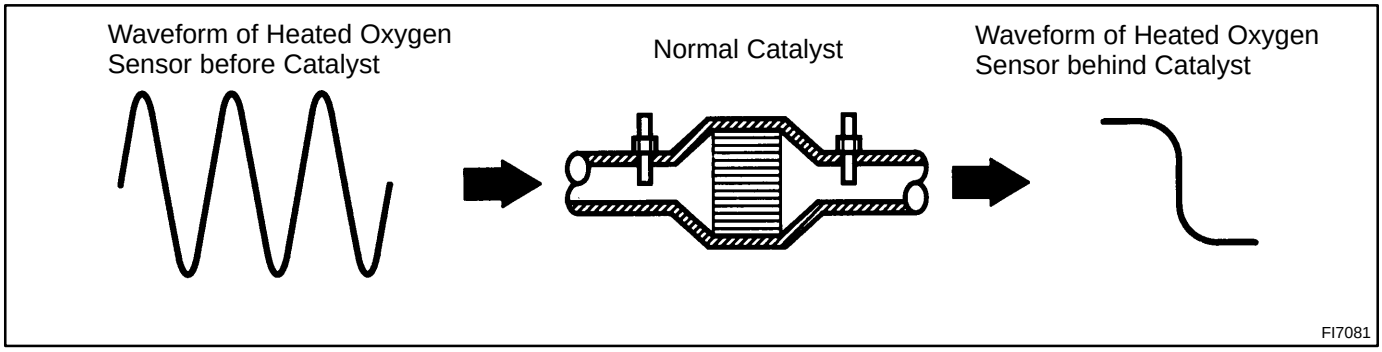

DTC No.	DTC Detecting Condition	Trouble Area
P0420	After the engine and the catalyst are warmed up, and while the vehicle is driven within the set vehicle and engine speed range, the waveforms of the oxygen sensors (bank 1 sensor 1 and bank 1 sensor 2) have the same amplitude (2 trip detection logic)	• Gas leakage on exhaust system • Open or short in heated oxygen sensor circuit • Heated oxygen sensor • Three-way catalytic converter

CONFIRMATION ENGINE RACING PATTERN

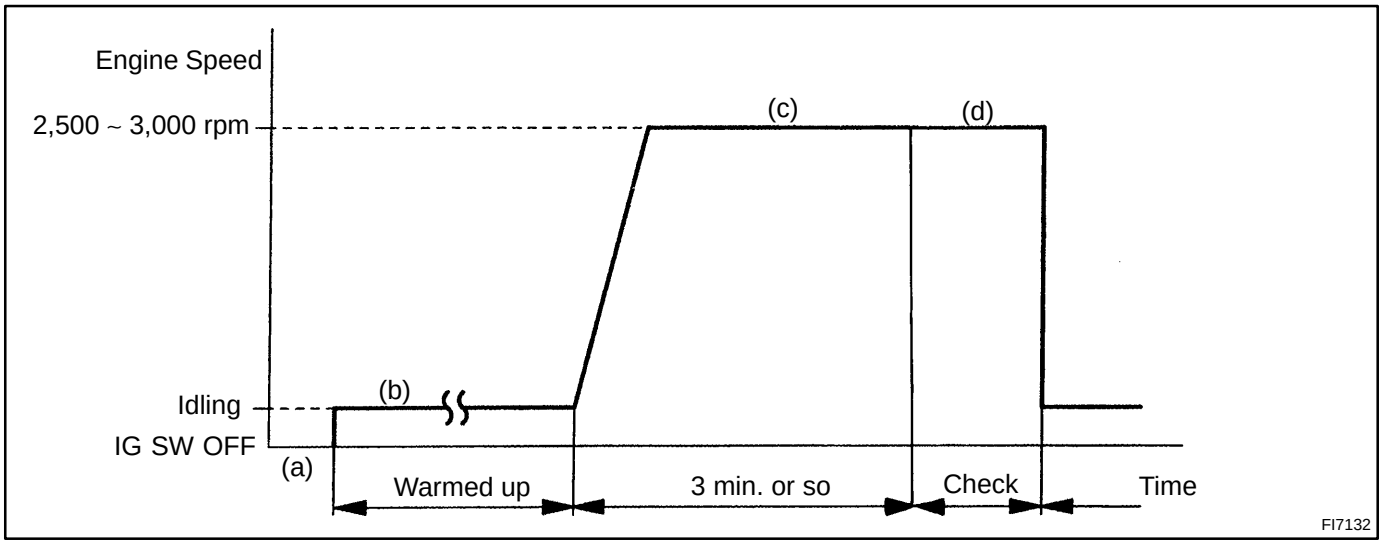

(a) Connect the TOYOTA hand-held tester to the DLC3, or connect the probe of the oscilloscope between terminals OX1, OX2 and E1 of the ECM connector.
(b) Start engine and warm it up with all accessories switched OFF until water temp. is stable.
(c) Race the engine at 2,500 - 3,000 rpm for about 3 min.
(d) After confirming that the waveforms of the oxygen sensor, bank 1 sensor 1 (OX1), oscillate around 0.5 V during feedback to the ECM, check the waveform of the oxygen sensor, bank 1 sensor 2 (OX2).

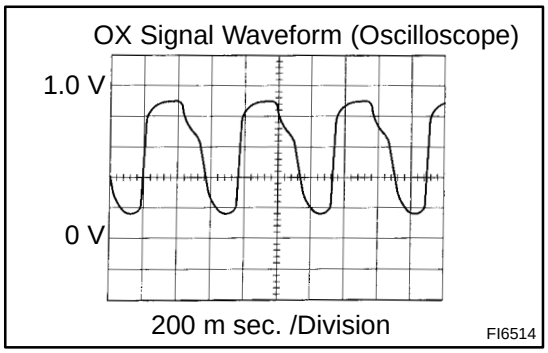

HINT:

- If there is a malfunction in the system, the waveform of the oxygen sensor, bank 1 sensor 2 (OX2), is almost the same as that of the oxygen sensor, bank 1 sensor 1 (OX1), on the left.
- There are some cases where, even though a malfunction exists, the MIL may either light up or not light up.

INSPECTION PROCEDURE

HINT:
Read freeze frame data using TOYOTA hand-held tester or OBD II scan tool. Because freeze frame records the engine conditions when the malfunction is detected, when troubleshooting it is useful for determining whether the vehicle was running or stopped, the engine warmed up or not, the air-fuel ratio lean or rich, etc. at the time of the malfunction.

1	**Are there any other codes (besides DTC P0420) being output?**

YES	**Go to relevant DTC chart (See page DI-14).**

NO

2	Check gas leakade on exhaust system.

NG → Repair or replace exhaust system.

OK

3	Check oxygen sensor (bank 1 sensor 1) (See page DI-48).

NG → Repair or replace oxygen sensor (bank 1 sensor 1).

OK

4	Check oxygen sensor (bank 1 sensor 2) (See page DI-57).

NG → Repair or replace oxygen sensor (bank 1 sensor 2).

OK

Replace three-way catalytic converter.

DI6VD-02

DTC	P0440	Evaporative Emission Control System Malfunction

CIRCUIT DESCRIPTION

The vapor pressure sensor, VSV for canister closed valve (CCV) and VSV for pressure switching valve are used to detect abnormalities in the evaporative emission control system.
The ECM decides whether there is an abnormality in the evaporative emission control system based on the vapor pressure sensor signal.
DTC P0440 or P0442 is recorded by the ECM when evaporative emissions leak from the components within the dotted line in Fig. 1 below, or when the vapor pressure sensor malfunctions.

Fig. 1

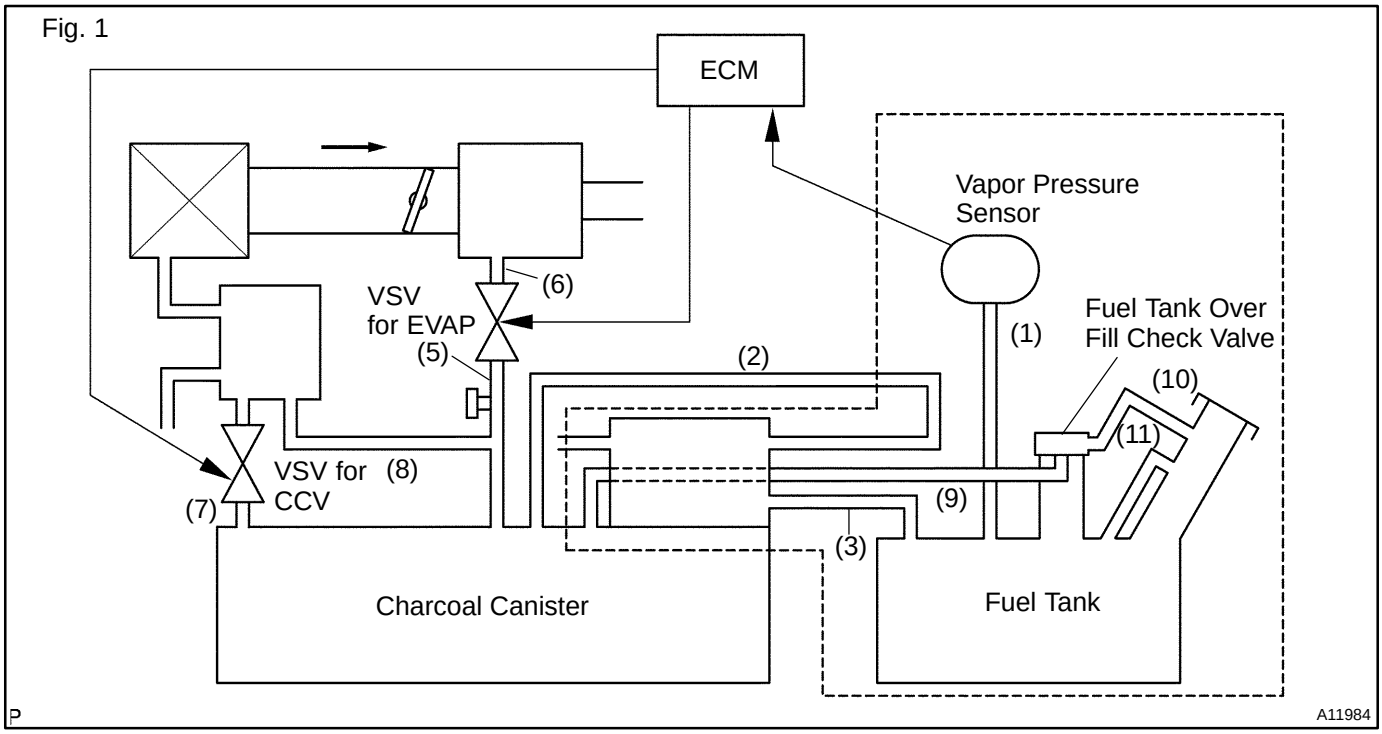

DTC No.	DTC Detecting Condition	Trouble Area
P0440	Fuel tank pressure is atmospheric pressure after vehicle is driven for 20 min. (2 trip detection logic)	• Hose or tube cracked, hole, damaged or loose seal ((3) in Fig. 1) • Fuel tank cap incorrectly installed • Fuel tank cap cracked or damaged • Vacuum hose cracked, holed, blocked, damaged or disconnected ((2) in Fig. 1) • Fuel tank cracked, holed or damaged • Charcoal canister cracked, holed or damaged • Open or short in vapor pressure sensor circuit • Vapor pressure sensor • Fuel tank over fill check valve cracked or damaged • ECM

WIRING DIAGRAM

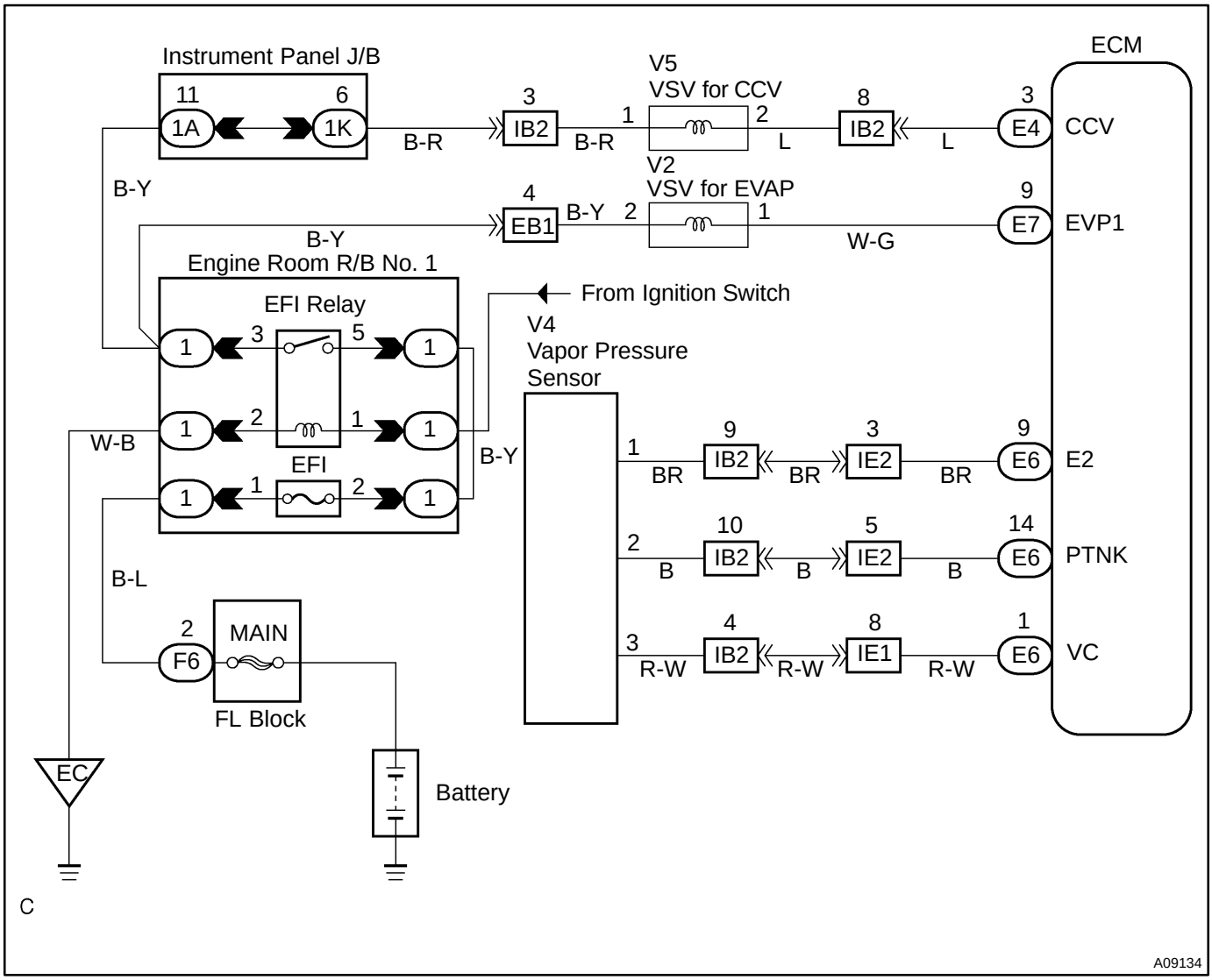

INSPECTION PROCEDURE

HINT:

- If DTC P0441, P0446, P0450 or P0451 is output after DTC P0440 or P0442, first troubleshoot DTC P0441, P0446, P0450 or P0451. If no malfunction is detected, troubleshoot DTC P0440 or P0442 next.
- Ask the customer whether, after the MIL came on, the customer found the fuel tank cap loose and tightened it. Also ask the customer whether the fuel tank cap was loose when refuelling. If the fuel tank cap was not loose, it was the cause of the DTC. If the fuel tank cap was not loose or if the customer was not sure if it was loose, troubleshoot according to the following procedure.
- Read freeze frame data using TOYOTA hand-held tester or OBD II scan tool. Because freeze frame records the engine conditions when the malfunction is detected. When troubleshooting, it is useful for determining whether the vehicle was running or stopped, the engine was warmed up or not, the air-fuel ratio was lean or rich, etc. at the time of the malfunction.
- When the ENGINE RUN TIME in the freeze frame data is less than 200 seconds, carefully check the VSV for EVAP, charcoal canister and vapor pressure sensor.

1	**Check whether hose close to fuel tank have been modified, and check whether there are signs of any accident near fuel tank or charcoal canister.**

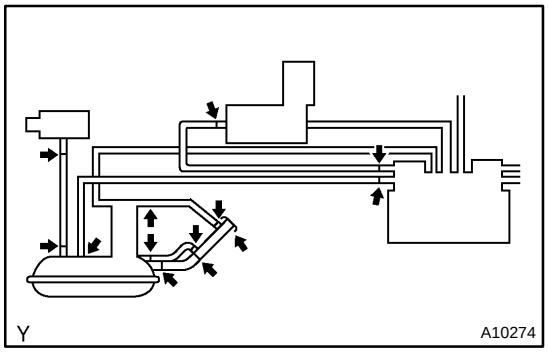

CHECK:

Check for cracks, deformation and loose connection of the following parts:

- Fuel tank
- Charcoal canister
- Fuel tank filler pipe
- Hoses and tubes around fuel tank and charcoal canister

NG → **Repair or replace.**

OK

2	**Check that fuel tank cap is TOYOTA genuine parts.**

NG → **Replace to TOYOTA genuine parts.**

OK

3	**Check that fuel tank cap is correctly installed.**

NG → **Correctly install fuel tank cap.**

OK

4	**Check fuel tank cap (See page EC-5).**

NG → **Replace fuel tank cap.**

OK

5	**Check filler neck for damage.**

PREPARATION:
Remove the fuel tank cap.
CHECK:
Visually inspect the filler neck for damage.

NG → **Replace filler pipe.**

OK

6	**Check vacuum hoses between vapor pressure sensor and fuel tank, and charcoal canister and VSV for pressure switching valve and VSV for pressure switching valve and charcoal canister.**

CHECK:
(a) Check that the vacuum hose is connected correctly.
(b) Check the vacuum hose for looseness and disconnection.
(c) Check the vacuum hose for cracks, hole and damage.

NG → **Repair or replace.**

OK

7	**Check hose and tube between fuel tank and charcoal canister.**

CHECK:
(a) Check for proper connection of the fuel tank and fuel evap pipe (See page EC-5), fuel evap pipe and fuel tube under the floor, fuel tube under the floor and charcoal canister.
(b) Check the hose and tube for cracks, hole and damage.

NG → **Repair or replace.**

OK

8	**Check charcoal canister for cracks, hole and damage (See page EC-5).**

NG → **Replace charcoal canister.**

OK

9	**Check voltage between terminals VC and E2 of ECM connector.**

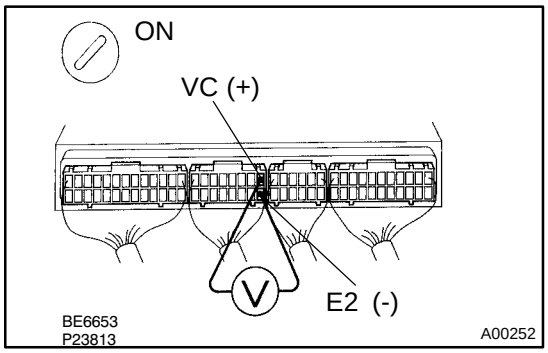

CHECK:

(a) Remove the connector cover from the ECM.

(b) Turn the ignition switch ON.

CHECK:

Measure the voltage between terminals VC and E2 of the ECM connector.

OK:

Voltage: 4.5 - 5.5 V

NG → **Check and replace ECM (See page IN-29).**

OK

10	**Check voltage between terminals PTNK and E2 of ECM connectors.**

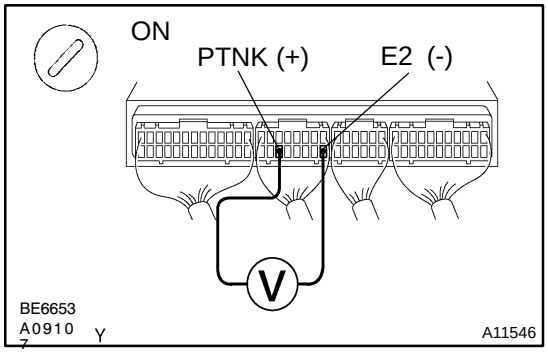

PREPARATION:

(a) Remove the connector cover from the ECM.

(b) Remove the fuel tank cap.

(c) Turn the ignition switch ON.

CHECK:

Measure the voltage between terminals PTNK and E2 of the ECM connectors.

OK:

Voltage: 3.0 - 3.6 V

OK → **Go to step 12.**

NG

11	Check for open and short in harness and connector between vapor pressure sensor and ECM (See page IN-29).

NG → Repair or replace harness or connector.

OK →

Replace vapor pressure sensor.

12	Check fuel tank and fuel tank over fill check valve for cracks and damage.

NG → Replace fuel tank or fuel tank over fill check valve.

OK →

It is likely that vehicle user did not properly close fuel tank cap. Please explain to customer how to properly install fuel tank cap.

DI6VE-02

DTC	P0441	Evaporative Emission Control System Incorrect Purge Flow

DTC	P0446	Evaporative Emission Control System Vent Control Malfunction

CIRCUIT DESCRIPTION

The vapor pressure sensor, VSV for canister closed valve (CCV), VSV for pressure switching valve are used to detect abnormalities in the evaporative emission control system.

The ECM decides whether there is an abnormality in the evaporative emission control system based on the vapor pressure sensor signal.

DTCs P0441 and P0446 are recorded by the ECM when evaporative emissions leak from the components within the dotted line in Fig. 1 below, or when there is a malfunction in either the VSV for EVAP, the VSV for pressure switching valve, or in the vapor pressure sensor itself.

Fig. 1

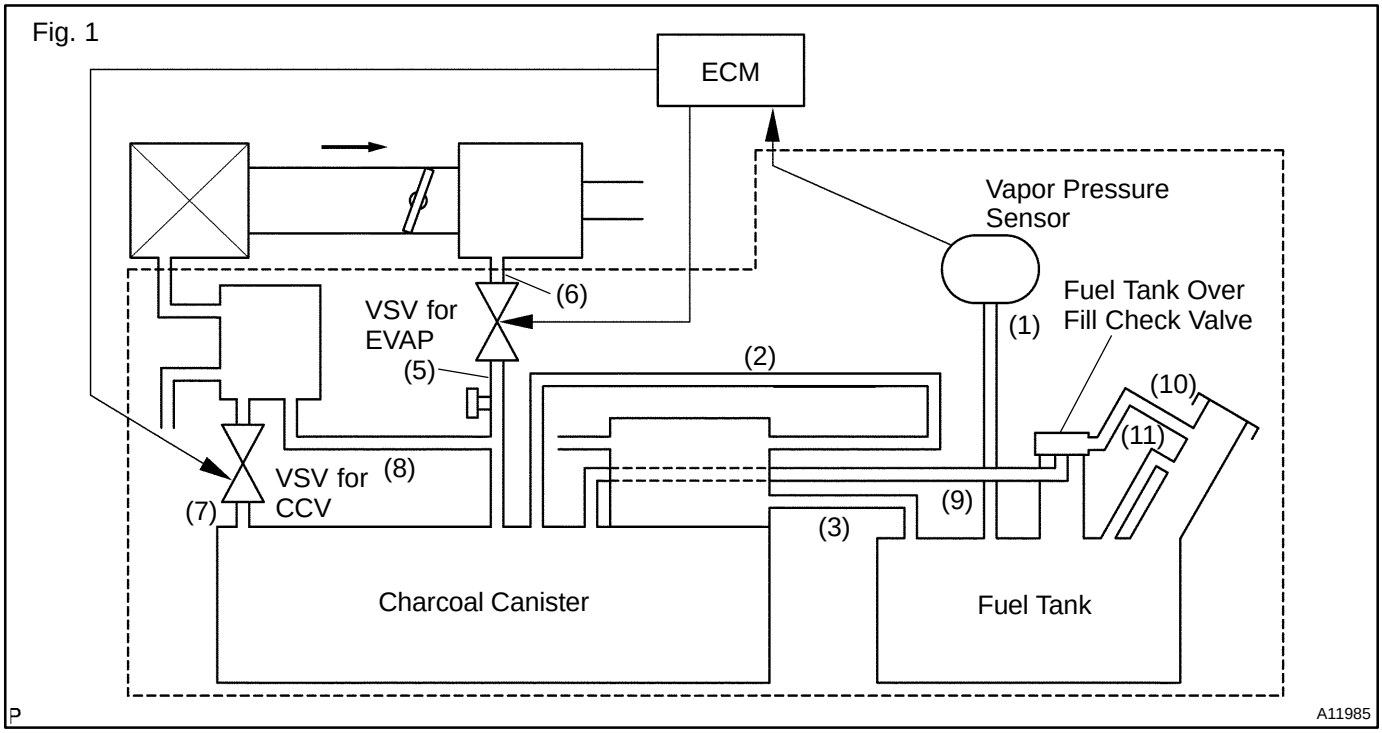

DTC No.	DTC Detecting Condition	Trouble Area
P0441	Pressure in charcoal canister does not drop during purge control (2 trip detection logic)	• Open or short in vapor pressure sensor circuit • Vapor pressure sensor • Open or short in VSV circuit for EVAP • VSV for EVAP • Open or short in VSV circuit for vapor pressure sensor • VSV for vapor pressure sensor • Charcoal canister cracked, hole or damaged • Fuel tank over fill check valve cracked or damaged • ECM
	During purge cut-off, pressure in charcoal canister is very low compared with atmospheric pressure (2 trip detection logic)	
P0446	When VSV for pressure switching valve is OFF, ECM judges that there is no continuity between vapor pressure sensor vapor pressure sensor and charcoal canister (2 trip detection logic)	
	When VSV for pressure switching valve is OFF, ECM judges that there is no continuity between vapor pressure sensor and fuel tank (2 trip detection logic)	
	After purge cut off operates, pressure in charcoal canister is maintained at atmospheric pressure (2 trip detection logic)	

WIRING DIAGRAM

Refer to DTC P0440 on page DI-80 .

INSPECTION PROCEDURE

HINT:

- If DTC P0441, P0446, P0450 or P0451 is output after DTC P0440,first troubleshoot DTC P0441, P0446, P0450 or P0451. If no malfunction is detected, troubleshoot DTC P0440 next.
- Read freeze frame data using TOYOTA hand-held tester or OBD II scan tool. Because freeze frame records the engine conditions when the malfunction is detected. When troubleshooting, it is useful for determining whether the vehicle was running or stopped, the engine was warmed up or not, the air-fuel ratio was lean or rich, etc. at the time of the malfunction.
- When the ENGINE RUN TIME in the freeze frame data is less than 200 seconds, carefully check the VSV for EVAP, charcoal canister and vapor pressure sensor.

TOYOTA hand-held tester:

1	**Check whether hose close to fuel tank have been modified, and check whether there are signs of any accident near fuel tank or charcoal canister (See page DI-80).**

NG → **Repair or replace.**

OK

2	**Check that fuel tank cap is TOYOTA genuine parts.**

NG → **Replace to TOYOTA genuine parts.**

OK

3	Check that fuel tank cap is correctly installed.

NG → Correctly install fuel tank cap.

OK

4	Check fuel tank cap (See page EC-5).

NG → Replace fuel tank cap.

OK

5	Check filler neck for damage.

NG → Replace filler pipe.

OK

6	Check vacuum hoses between vapor pressure sensor and fuel tank, and charcoal canister and VSV for pressure switching valve and VSV for pressure switching valve and charcoal canister (See page DI-80).

NG → Repair or connect VSV or sensor connector.

OK

7	Check hose and tube between fuel tank and charcoal canister (See page DI-80).

NG → Repair or replace.

OK

8	**Check VSV connector for EVAP, VSV connector for CCV, VSV connector for pressure switching valve and vapor pressure sensor connector for looseness and disconnection.**

NG → **Repair or connect VSV or sensor connector.**

OK

9	**Check vacuum hoses ((8), (9), (10) and (11) in Fig. 1 in circuit description).**

CHECK:

(a) Check that the vacuum hose is connected correctly.
(b) Check the vacuum hose for looseness and disconnection.
(c) Check the vacuum hose for cracks, hole, damage and blockage.

NG → **Repair or replace.**

OK

10	**Check voltage between terminals VC and E2 of ECM connector (See page DI-80).**

NG → **Check and replace ECM (See page IN-29).**

OK

11	**Check voltage between terminals PTNK and E2 of ECM connectors (See page DI-80).**

OK → **Go to step 13.**

NG

12	**Check for open and short in harness and connector between vapor pressure sensor and ECM (See page IN-29).**

NG → **Repair or replace harness or connector.**

OK

Replace vapor pressure sensor.

13	**Check purge flow.**

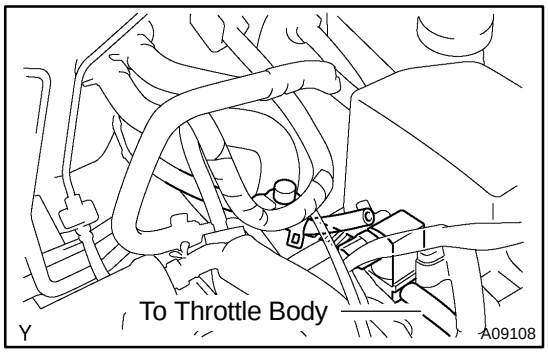

PREPARATION:

(a) Connect the TOYOTA hand-held tester to the DLC3.
(b) Select the ACTIVE TEST mode on the TOYOTA hand-held tester.
(c) Disconnect the vacuum hose from the VSV for the EVAP from the charcoal canister.
(d) Start the engine.

CHECK:

When the VSV for the EVAP is operated by the TOYOTA hand-held tester, check whether the disconnected hose applies suction to your finger.

OK:

VSV is ON:
Disconnected hose applies suction to your finger.
VSV is OFF:
Disconnected hose applies no suction to your finger.

OK → **Go to step 16.**

NG

14	**Check vacuum hose between intake manifold and VSV for EVAP, and VSV for EVAP and charcoal canister.**

CHECK:

(a) Check that the vacuum hose is connected correctly.
(b) Check the vacuum hose for looseness and disconnection.
(c) Check the vacuum hose for cracks, hole, damage and blockage.

NG → **Repair or replace.**

OK

15	**Check operation of VSV for EVAP (See page SF-50).**

OK → **Go to step 16.**

NG

Replace VSV and charcoal canister,and then clean the vacuum hose between throttle body and VSV for EVAP, and VSV for EVAP and charcoal canister.

16	**Check for open and short in harness and connector between EFI main relay (Marking: EFI) and VSV for EVAP, and VSV for EVAP and ECM (See page IN-29).**

NG → **Repair or replace harness or connector.**

OK

Check and replace ECM (See page IN-29).

17	Check VSV for CCV.

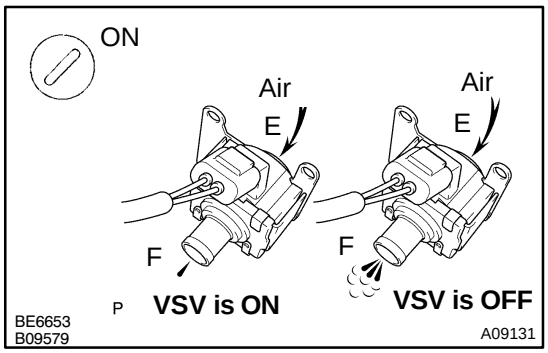

PREPARATION:

(a) Connect the TOYOTA hand-held tester to the DLC3.
(b) Diconnect the vacuum hose for the VSV for the CCV from the charcoal canister.
(c) Turn the ignition switch ON and push the TOYOTA hand-held tester main switch ON.
(d) Select the ACTIVE TEST mode on the TOYOTA hand-held tester.

CHECK:

Check the VSV operation when it is operated by the TOYOTA hand-held tester.

OK:

VSV is ON:
Air does not flow from port E to port F.
VSV is OFF:
Air from port E flows out through port F.

OK	Go to step 21.

NG

18	Check vacuum hose between VSV for CCV and charcoal canister.

CHECK:

(a) Check that the vacuum hose is connected correctly.
(b) Check the vacuum hose for looseness and disconnection.
(c) Check the vacuum hose for cracks, hole damage and blockage.

NG	Repair or replace.

OK

19	Check operation of VSV for CCV.

OK	Go to step 20.

NG

Replace VSV and charcoal canister, and then clean vacuum hose between charcoal canister and VSV for CCV.

20	**Check for open and short in harness and connector between EFI main relay (Marking: EFI) and VSV for CCV, and VSV for CCV and ECM (See page IN-29).**

NG → **Repair or replace harness or connector.**

OK

Check and replace ECM (See page IN-29).

21	**Check fuel tank.**

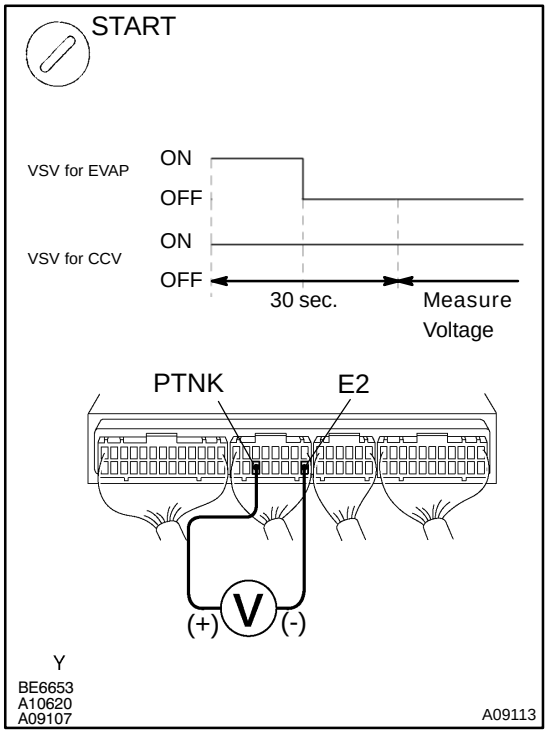

PREPARATION:

(a) Remove the connector cover from the ECM.
(b) Connect the TOYOTA hand-held tester to the DLC3.
(c) Select the ACTIVE TEST mode on the TOYOTA hand-held tester.
(d) Start the engine.
(e) The VSV for the CCV is ON by the TOYOTA hand-held tester.
(f) The VSV for the EVAP is OFF, and the VSV for the pressure switching valve is ON by the TOYOTA hand-held tester and remains on for 30 sec.

CHECK:

Measure the voltage between terminals PTNK and E2 of the ECM connectors after switching the VSV for the EVAP from OFF to ON, and the VSV for the pressure switching valve from ON to OFF.

OK:

Voltage: 2.5 V or less

NG → **Replace fuel tank.**

OK

22	Check charcoal canister.

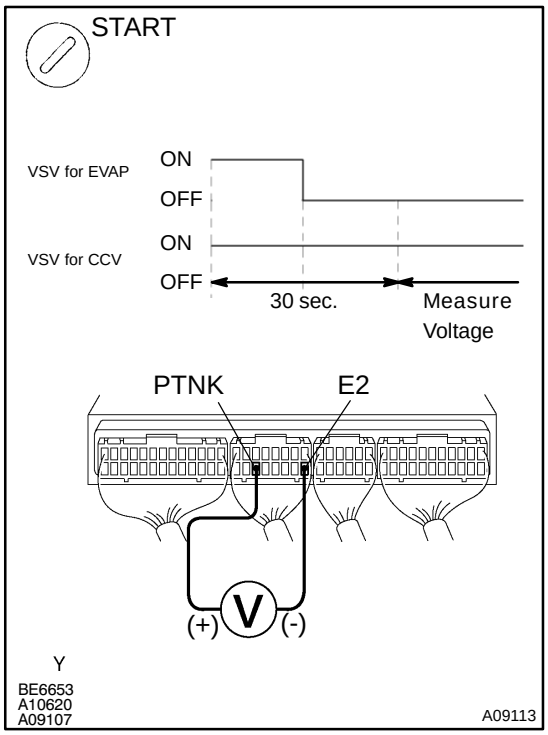

PREPARATION:

(a) Remove the connector cover from the ECM.
(b) Connect the TOYOTA hand-held tester to the DLC3.
(c) Select the ACTIVE TEST mode on the TOYOTA hand-held tester.
(d) Start the engine.
(e) The VSV for the CCV and the VSV for the pressure switching valve are ON by the TOYOTA hand-held tester.
(f) The VSV for the EVAP is OFF by the TOYOTA hand-held tester and remains on for 30 sec.

CHECK:

Measure the voltage between terminals PTNK and E2 of the ECM connectors after switching the VSV for the EVAP from OFF to ON.

OK:

Voltage: 2.5 V or less

NG → **Replace charcoal canister.**

OK

23	Remove chacoal canister and check it (See page EC-5).

NG → **Replace charcoal canister.**

OK

24	Check fuel tank over fill check valve (See page EC-5).

NG → **Replace fuel tank over fill check valve or fuel tank.**

OK

Check and replace ECM (See page IN-29).

OBD II scan tool (excluding TOYOTA hand-held tester):

1	Check whether hose close to fuel tank have been modified, and check whether there are signs of any accident near fuel tank or charcoal canister (See page DI-80).

NG → Repair or replace.

OK

2	Check that fuel tank cap is TOYOTA genuine parts.

NG → Replace to TOYOTA genuine parts.

OK

3	Check that fuel tank cap is correctly installed.

NG → Correctly install fuel tank cap.

OK

4	Check fuel tank cap (See page EC-5).

NG → Replace fuel tank cap.

OK

5	**Check filler neck for damage.**

NG → **Replace filler pipe.**

OK ↓

6	**Check VSV connector for EVAP, VSV connector for CCV, VSV connector for pressure switching valve and vapor pressure sensor connector for looseness and disconnection.**

NG → **Repair or connect VSV or sensor connector.**

OK ↓

7	**Check vacuum hoses ((8), (9) , (10) and (11) in Fig. 1 in circuit description).**

CHECK:

(a) Check that the vacuum hose is connected correctly.
(b) Check the vacuum hose for looseness and disconnection.
(c) Check the vacuum hose for cracks, hole damage and blockage.

NG → **Repair or replace vacuum hoses.**

OK ↓

8	**Check voltage between terminals VC and E2 of ECM connector (See page DI-80).**

NG → **Check and replace ECM (See page IN-29).**

OK ↓

9	**Check voltage between terminals PTNK and E2 of ECM connectors (See page DI-80).**

OK → **Go to step 11.**

NG

10	**Check for open and short in harness and connector between vapor pressure sensor and ECM (See page IN-29).**

NG → **Repair or replace harness or connector.**

OK

Replace vapor pressure sensor.

11	**Check VSV for EVAP.**

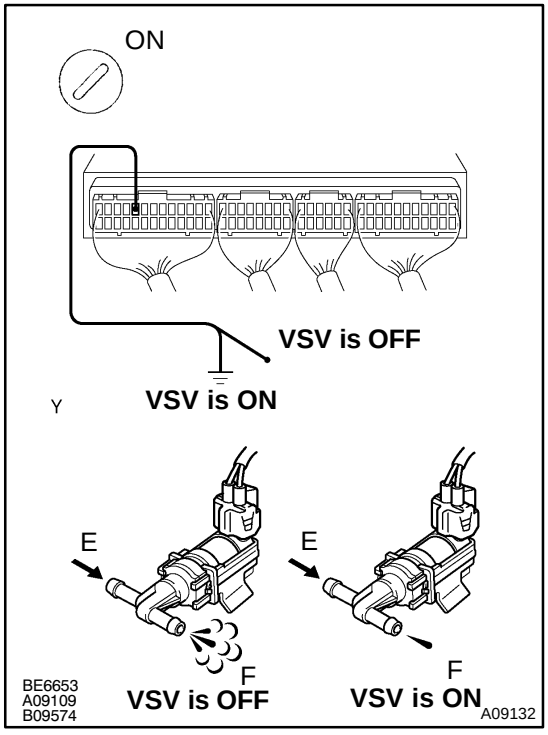

PREPARATION:

(a) Remove the connector cover from the ECM.

(b) Turn the ignition switch ON.

CHECK:

Check VSV function.

(1) Connect between terminal EVP1 of the ECM connector and body ground (VSV ON).

(2) Disconnect between terminal EVP1 of the ECM connector and body ground (VSV OFF).

OK:

(1) VSV is ON:
Air from port E fows out through port F.
(2) VSV is OFF:
Air does not flow from port E to port F.

OK → **Go to step 14.**

NG

12	Check operation of VSV for EVAP (See page SF-50).

NG → Go to step 13.

NG

Replace VSV and clean vacuum hoses between throttle body and VSV for EVAP, and VSV for EVAP and charcoal canister, and then check charcoal canister.

13	Check for open and short in harness and connector between EFI main relay (Marking: EFI) and VSV for EVAP, and VSV for EVAP and ECM (See page IN-29).

NG → Repair or replace harness or connector.

OK

Check and replace ECM (See page IN-29).

14	Check VSV for CCV.

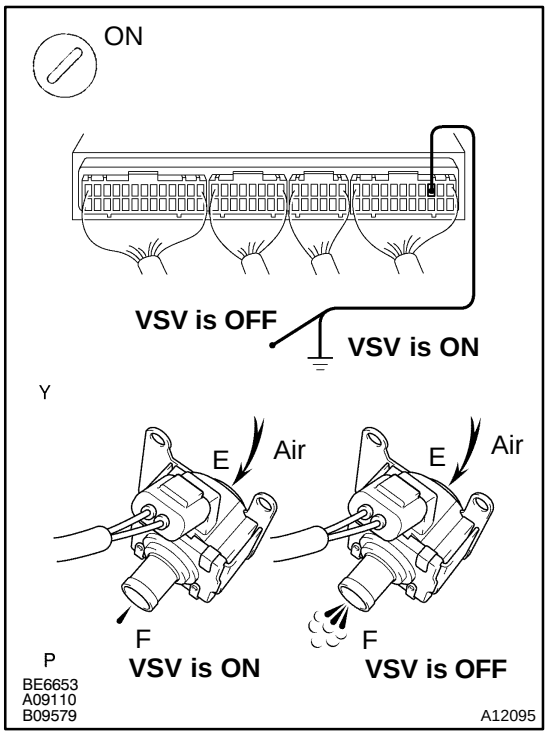

PREPARATION:

(a) Remove the connector cover from the ECM.

(b) Turn the ignition switch ON.

CHECK:

Check the VSV function.

(1) Connect between terminal CCV of the ECM connector and body ground (VSV ON).

(2) Disconnect between terminal CCV of the ECM connector and body ground (VSV OFF).

OK:

VSV is ON:
Air does not flow from port E to port F.
VSV is OFF:
Air from port E flows out through port F.

OK	Go to step 17.

NG

15	Check operation of VSV for CCV (See page SF-52).

OK	Go to step 16.

NG

Replace VSV and charcoal canister, and then clean vacuum hoses between charcoal canister and VSV for CCV.

16	Check for open and short in harness and connector between EFI main relay (Marking: EFI) and VSV for CCV, and VSV for CCV and ECM (See page IN-29).

NG → Repair or replace harness or connector.

OK

Check and replace ECM (See page IN-29).

17	Check fuel tank over fill check valve (See page EC-5).

NG → Replace fuel tank over fill check valve or fuel tank.

OK

Check and replace charcoal canister (See page EC-5).

DI6VF-02

DTC	P0450	Evaporative Emission Control System Pressure Sensor Malfunction

DTC	P0451	Evaporative Emission Control System Pressure Sensor Range/Performance

CIRCUIT DESCRIPTION

The vapor pressure sensor, VSV for canister closed valve (CCV) and VSV for pressure switching valve are used to detect abnormalities in the evaporative emission control system.
The ECM decides whether there is an abnormality in the evaporative emission control system based on the vapor pressure sensor signal.
DTC P0450 or P0451 is recorded by the ECM when the vapor pressure sensor malfunction.

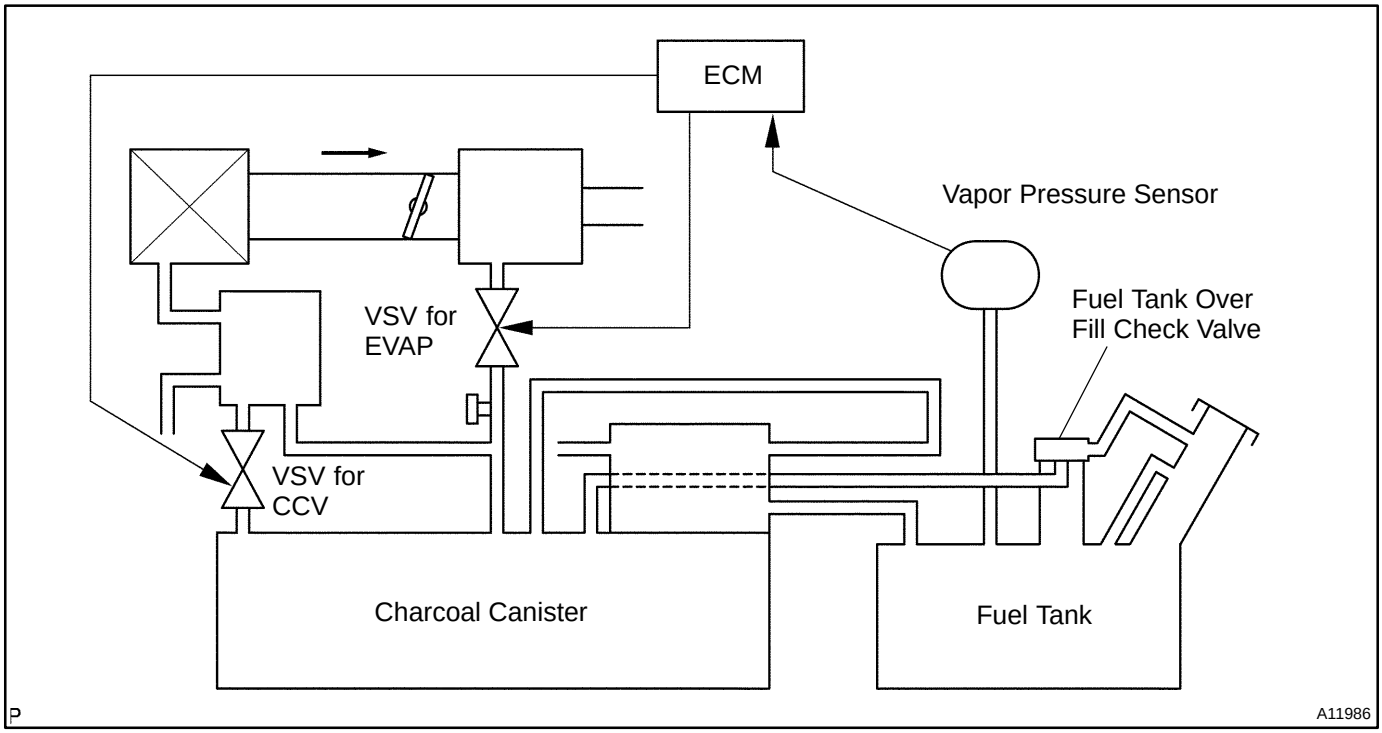

DTC No.	DTC Detecting Condition	Trouble Area
P0450	10 seconds or less after engine starting condition (a) or (b) continues for 7 seconds or more: (2 trip detection logic) (a) Vapor pressure sensor value < -4.0 kPa (-30 mmHg, -1.2 in.Hg) (b) Vapor pressure sensor value ≧ 2.0 kPa (15 mmHg, 0.6 in.Hg)	• Open or short in vapor pressure sensor circuit • Vapor pressure sensor • ECM
P0451	Vapor pressure sensor output extremely changes under conditions of (a) or (b): (2 trip detection logic) (a) Vehicle speed: 0 km/h (0mph),Engine speed: Idling and VSV for pressure switching valve is OFF (b) High vaver pressure senser	

WIRING DIAGRAM

Refer to DTC P0440 on page DI-80 .

INSPECTION PROCEDURE

HINT:

- If DTC P0441, P0446, P0450 or P0451 is output after DTC P0440, first trouble shoot DTC P0441, P0446 P0450 or P0451. If no malfunction is detected, troubleshoot DTC P0440 next.
- Read freeze frame data using TOYOTA hand-held tester or OBD II scan tool. Because freeze frame records the engine conditions when the malfunction is detected. When troubleshooting, it is useful for determining whether the vehicle was running or stopped, the engine was warmed up or not, the air-fuel ratio was lean or rich, etc. at the time of the malfunction.
- When the ENGINE RUN TIME in the freeze frame data is less than 200 seconds, carefully check the VSV for EVAP, charcoal canister and vapor pressure sensor.

1	**Check voltage between terminals VC and E2 of ECM connector (See page DI-80).**

NG → **Check and replace ECM (See page IN-29).**

OK

2	**Check voltage between terminals PTNK and E2 of ECM connectors (See page DI-80).**

OK → **Check and replace ECM (See page IN-29).**

NG

3	**Check for open and short in harness and connector between vapor pressure sensor and ECM (See page IN-29).**

NG → **Repair or replace harness or connector.**

OK

Replace vapor pressure sensor.

DI6VG-04

DTC	P0500	Vehicle Speed Sensor Malfunction

CIRCUIT DESCRIPTION

The No.1 vehicle speed sensor outputs a 4-pulse signal for every revolution of the rotor shaft, which is rotated by the transmission output shaft via the driven gear. After this signal is converted into a more precise rectangular waveform by the waveform shaping circuit inside the combination meter, it is then transmitted to the ECM. The ECM determines the vehicle speed based on the frequency of these pluse signals.

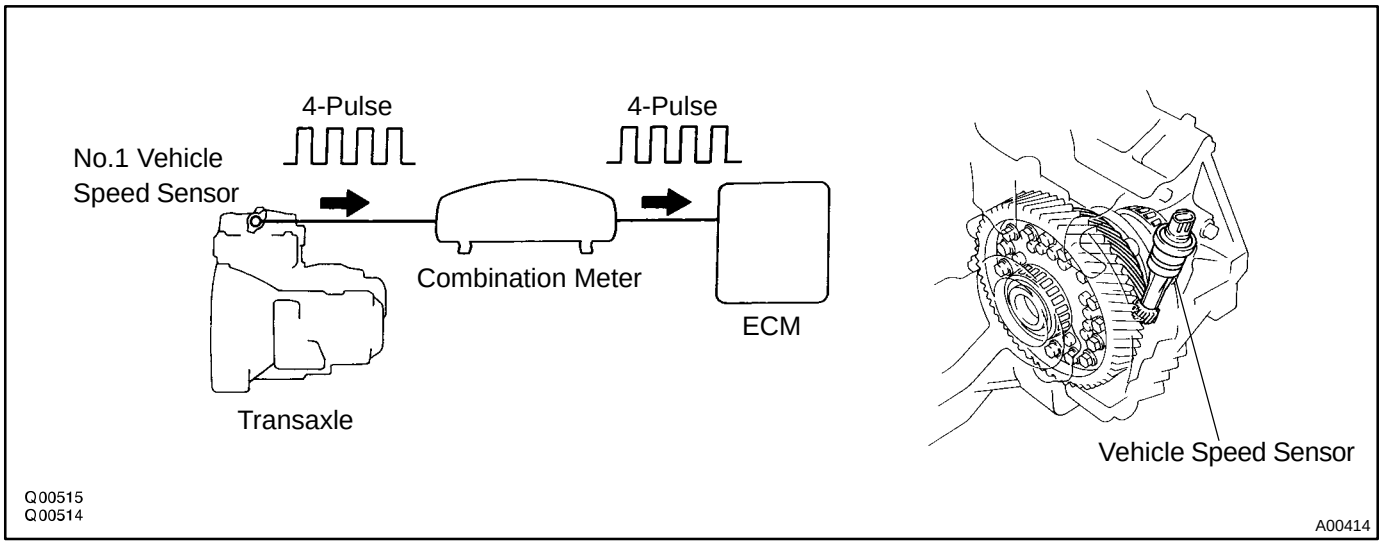

DTC No.	DTC Detecting Condition	Trouble Area
P0500	During vehicle is being driven, no vehicle speed sensor signal to ECM (2 trip detection logic)	• Combination meter • Open or short in vehicle speed sensor circuit • Vehicle speed sensor • ECM

WIRING DIAGRAM

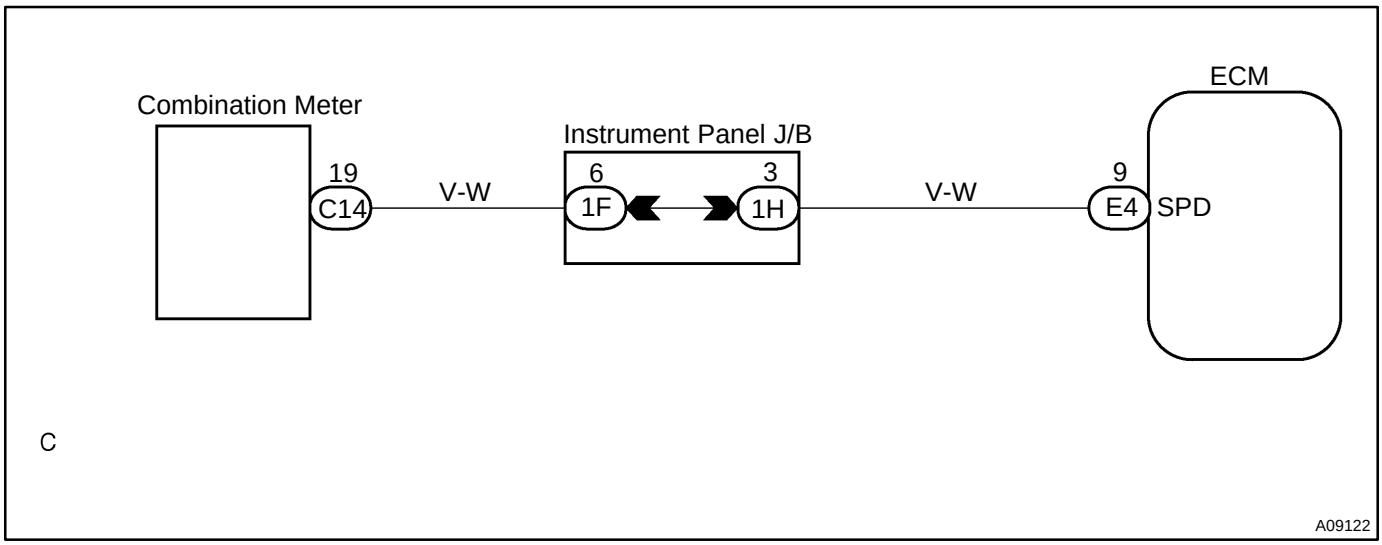

INSPECTION PROCEDURE

HINT:
Read freeze frame data using TOYOTA hand-held tester or OBD II scan tool. Because freeze frame records the engine conditions when the malfunction is detected, when troubleshooting it is useful for determining whether the vehicle was running or stopped, the engine warmed up or not, the air-fuel ratio lean or rich, etc. at the time of the malfunction.

1	**Check operation of speedometer.**

CHECK:
Drive the vehicle and check if the operation of the speedmeter in the combination meter is normal.
HINT:
The vehicle speed sensor is operating normally if the speedometer display is normal.

NG → **Check speedometer circuit. See combination meter troubleshooting. (See page BE-2).**

OK

2	Check voltage between terminal SPD of ECM connector and body ground.

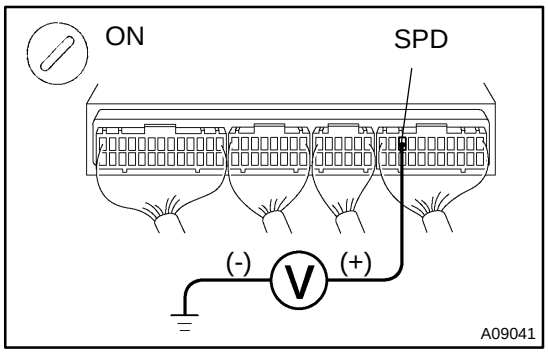

PREPARATION:

(a) Remove the connector cover from the ECM.
(b) Shift the shift lever to neutral.
(c) Jack up one of the front wheels.
(d) Turn the ignition switch ON.

CHECK:

Measure voltage between terminal SPD of ECM connector and body ground when the wheel is turned slowly.

OK:

Voltage is generated intermittently.

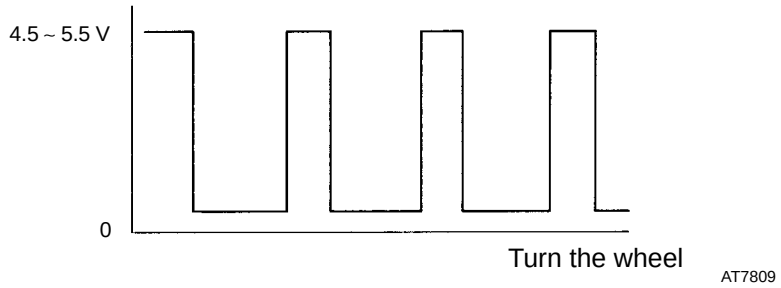

NG → **Check and repair harness and connector between combination meter and ECM.**

OK

Check and replace ECM (See page IN-29).

DI6VH-02

DTC	P0505	Idle Control System Malfunction

CIRCUIT DESCRIPTION

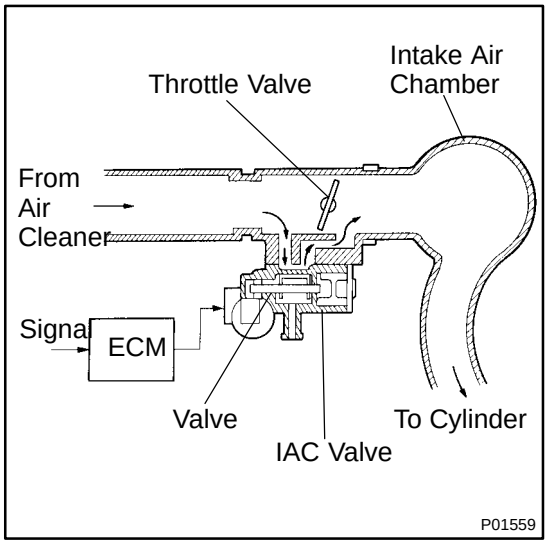

The rotary solenoid type IAC valve is located on the throttle body and intake air bypassing the throttle valve is directed to the IAC valve through a passage.
In this way the intake air volume bypassing the throttle valve is regulated, controlling the engine speed.
The ECM operates only the IAC valve to perform idle-up and provide feedback for the target idling speed.

DTC No.	DTC Detecting Condition	Trouble AreaTrouble Area
P0505	Idle speed continues to vary greatly from the target speed (2 trip detection logic)	• IAC valve is stuck or closed • Open or short in IAC valve circuit • Open or short in A/C switch circuit • Air induction system • ECM • PCV piping

WIRING DIAGRAM

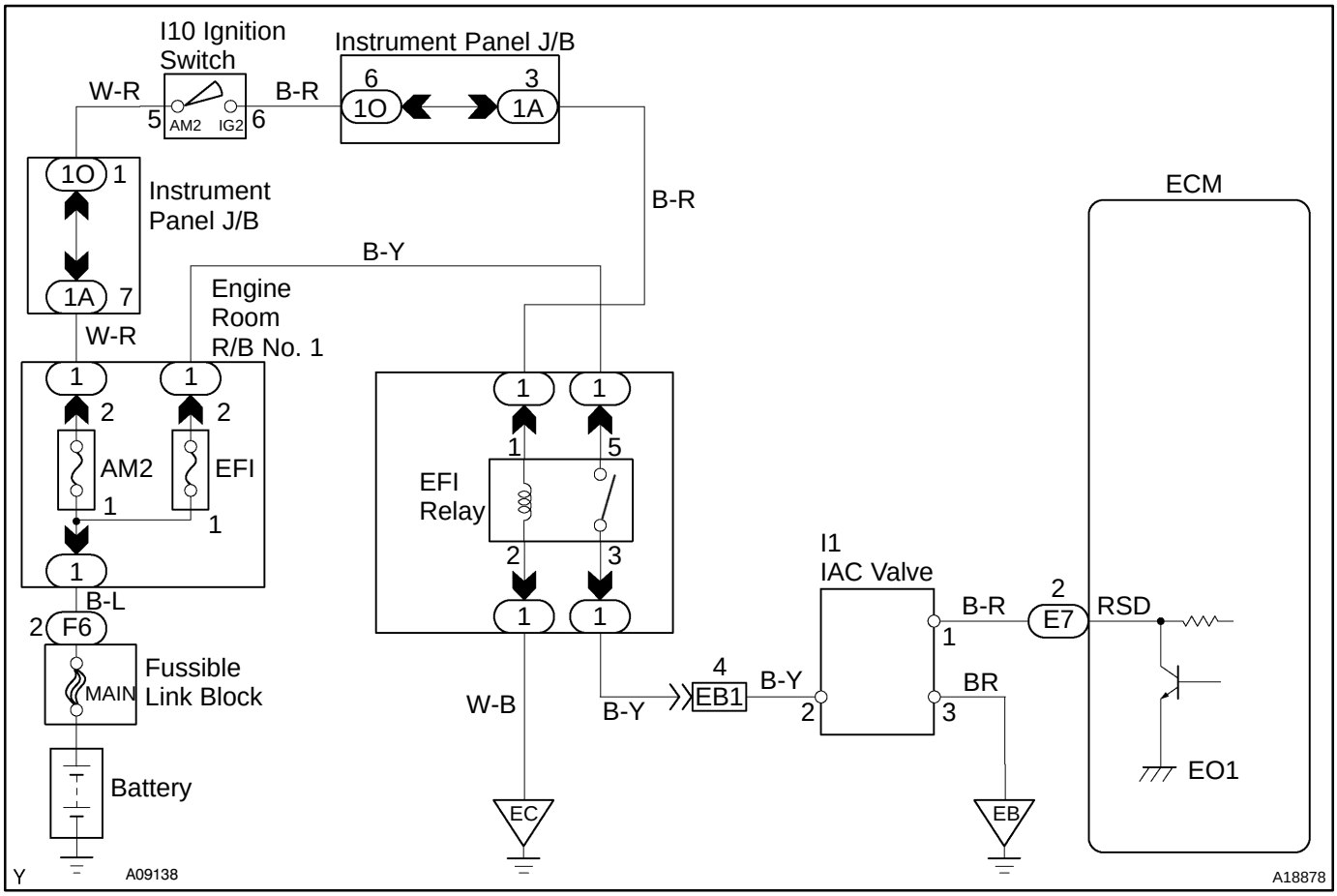

INSPECTION PROCEDURE

HINT:
Read freeze frame data using TOYOTA hand-held tester or OBD II scan tool. Because freeze frame records the engine conditions when the malfunction is detected, when troubleshooting it is useful for determining whether the vehicle was running or stopped, the engine warmed up or not, the air-fuel ratio lean or rich, etc. at the time of the malfunction.

1	**Check engine idle speed.**

PREPARATION:
(a) Warm up engine to normal operating temperature.
(b) Switch off all accessories.
(c) Switch off alr conditioning.
(d) Shift transmission into ”N” or neutral position.
(e) Connect the TOYOTA hand-held tester to DLC3 on the vehicle.
(f) Select ACTIVE TEST mode on the TOYOTA hand-held tester.

CHECK:
Make note of the engine RPM before, and 5 seconds after the TOYOTA hand-held tester active test is turned ON.

OK:
Difference of engine speed: More than 100 rpm.

OK → **Go to step 7.**

NG

2	**Check connection of PCV piping.**

NG → **Repair or replace PCV piping.**

OK

3	**Check voltage between terminals RSD of ECM connector and body ground.**

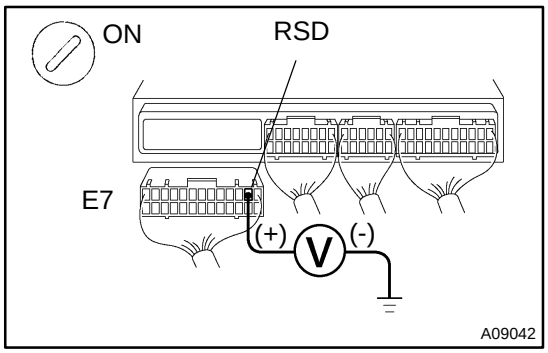

PREPARATION:

(a) Remove the connector cover from the ECM.
(b) Disconnect the E7 connector of ECM.
(c) Turn the ignition switch ON.

CHECK:

Measure voltage between terminals RSD of the ECM connector and body ground,

OK:

Voltage: 9 - 14 V

OK	**Go to step 5.**

NG

4	**Check IAC valve (See page SF-37).**

NG	**Replace IAC valve.**

OK

Check for open and short in harness and connector between engine room J/B No.2 and IAC valve and ECM (See page IN-29).

5	**Check operation of the IAC valve (See page SF-37).**

NG	**Repair or replace IAC valve.**

OK

6	Check the blockage of IAC valve and the passage to bypass the throttle valve.

NG → Repair or replace IAC valve.

OK →

Check and replace ECM (See page IN-29).

7	Check for A/C signal circuit (See page AC-88).

NG → Repair or replace.

OK →

Check air induction system
(See page SF-1).

DTC	P0550	Power Steering Pressure Sensor Circuit Malfunction

CIRCUIT DESCRIPTION

ECM controls the idle speed the most appropriate according to the signal from the power steering pressure sensor.

DTC No.	DTC Detecting Condition	Trouble Area
P0550	Condition (a) or (b) continues with more than 0.5 secs.: (a) PNP < 0.28 V (b) PNP > 4.9 V	• Open in power steering pressure sensor circuit • Power steering oil pressure sensor • ECM

WIRING DIAGRAM

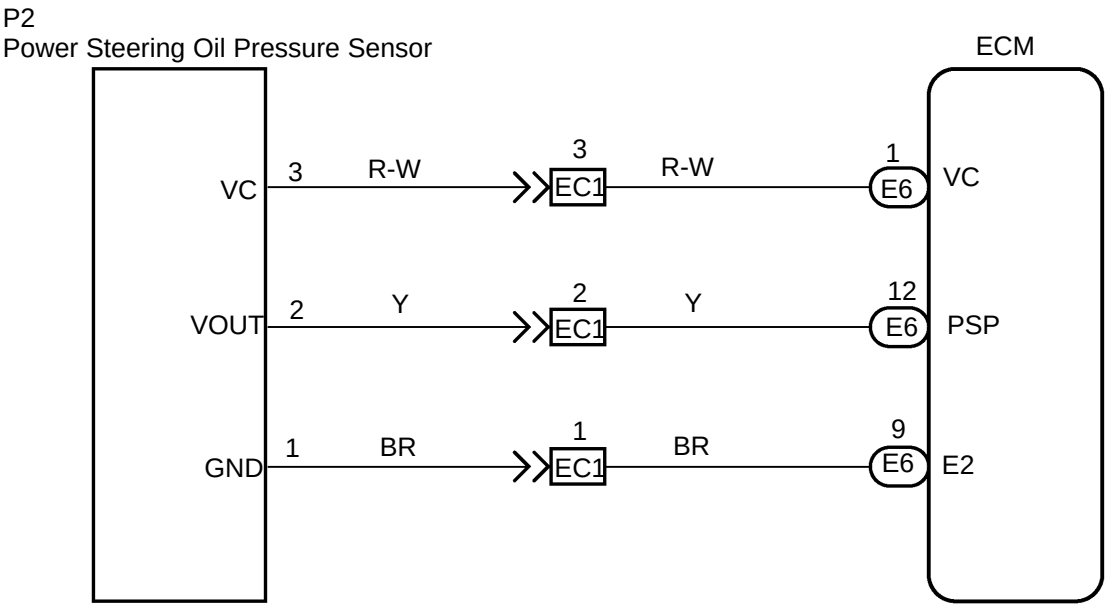

I05144

INSPECTION PROCEDURE

1	**Check power steering oil pressure sensor.**

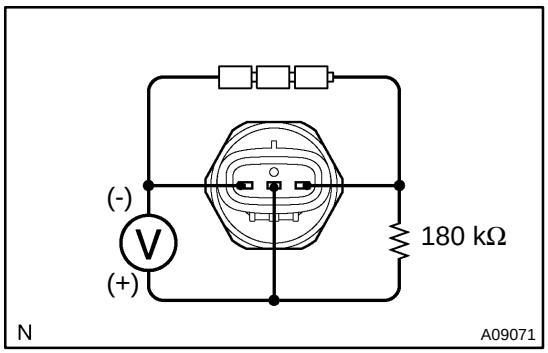

PREPARATION:

(a) Connect the 3 dry batteries of 1.5 V in series.

(b) Connect the wire harness as shown in the illustration.

CHECK:

Measure voltage between terminals Vout and GND.

OK:

Power steering fluid pressure	Voltage (V)
0 kPa (0 kgf/cm^2, 0 psi)	Approx. 0.45
3,500 kPa (36 kgf/cm^2, 512 psi)	Approx. 2.25
7,000 kPa (71 kgf/cm^2, 1,010 psi)	Approx. 4.05

NG → **Replace power steering oil pressure sensor.**

OK

2	**Check for open in harness and connector between ECM and power steering oil pressure sensor (See page IN-29).**

NG → **Repair or replace harness or connector.**

OK

Check and replace ECM(See page IN-29).

DI00G-02

CUSTOMER PROBLEM ANALYSIS CHECK

ENGINE CONTROL SYSTEM Check Sheet

Inspector's Name _____

Customer's Name		Model and Model Year	
Driver's Name		Frame No.	
Data Vehicle Brought in		Engine Model	
License No.		Odometer Reading	miles km

Problem Symptoms	☐ Engine does not Start	☐ Engine does not crank ☐ No initial combustion ☐ No complete combustion
	☐ Difficult to Start	☐ Engine cranks slowly ☐ Other _____
	☐ Poor Idling	☐ Incorrect first idle ☐ Idling rpm is abnormal ☐ High (rpm) ☐ Low (rpm) ☐ Rough idling ☐ Other _____
	☐ Poor Drivability	☐ Hesitation ☐ Back fire ☐ Muffler explosion (after-fire) ☐ Surging ☐ Knocking ☐ Other _____
	☐ Engine Stall	☐ Soon after starting ☐ After accelerator pedal depressed ☐ After accelerator pedal released ☐ During A/C operation ☐ Shifting from N to D ☐ Other _____
	☐ Others	

Data Problem Occurred		
Problem Frequency		☐ Constant ☐ Sometimes (times per day/month) ☐ Once only ☐ Other _____
Condition When Problem Occurs	Weather	☐ Fine ☐ Cloudy ☐ Rainy ☐ Snowy ☐ Various/Other _____
	Outdoor Temperature	☐ Hot ☐ Warm ☐ Cool ☐ Cold (approx. ____˚F/____˚C)
	Place	☐ Highway ☐ Suburbs ☐ Inner city ☐ Uphill ☐ Downhill ☐ Rough road ☐ Other _____
	Engine Temperature	☐ Cold ☐ Warming up ☐ After warming up ☐ Any temperature ☐ Other _____
	Engine Operation	☐ Starting ☐ Just after starting (min.) ☐ Idling ☐ Racing ☐ Driving ☐ Constant speed ☐ Acceleration ☐ Deceleration ☐ A/C switch ON/OFF ☐ Other _____

Condition of MIL		☐ Remains on ☐ Sometimes lights up ☐ Does not light up
DTC Inspection	Normal Mode (Pre-check)	☐ Normal ☐ Malfunction code(s) (code) ☐ Freeze frame data ( )
	Check Mode	☐ Normal ☐ Malfunction code(s) (code) ☐ Freeze frame data ( )

DI6UT-04

DIAGNOSTIC TROUBLE CODE CHART

HINT:

Parameters listed in the chart may not be exactly the same as your reading due to the type of instrument or other factors.

If a malfunction code is displayed during the DTC check in check mode, check the circuit for that code listed in the table below. For details of each code, turn to the page referred to under the ”See page ” for the respective ”DTC No.” in the DTC chart.

SAE CONTROLLED:

DTC No.	Detection Item	Trouble Area	MIL*1	Memory
P0100 (DI-22)	Mass Air Flow Circuit Malfunction	• Open or short in mass air flow meter circuit • Mass air flow meter • ECM	○	○
P0101 (DI-26)	Mass Air Flow Circuit Range/Performance Problem	• Mass air flow meter	○	○
P0110 (DI-27)	Intake Air Temp. Circuit Malfunction	• Open or short in intake air temp. sensor circuit • Intake air temp. sensor (built into mass air flow meter) • ECM	○	○
P0115 (DI-32)	Engine Coolant Temp. Circuit Malfunction	• Open or short in engine coolant temp. sensor circuit • Engine coolant temp. sensor • ECM	○	○
P0116 (DI-36)	Engine Coolant Temp. Circuit Range/Performance Problem	• Cooling system • Engine coolant temp. sensor	○	○
P0120 (DI-37)	Throttle/Pedal Position Sensor/Switch ”A” Circuit Malfunction	• Open or short in throttle position sensor circuit • Throttle position sensor • ECM	○	○
P0121 (DI-42)	Throttle/Pedal Position Sensor/Switch ”A” Circuit Range/Performance Problem	• Throttle position sensor • ECM	○	○
P0125 (DI-43)	Insufficient Coolant Temp. for Closed Loop Fuel Control	• Open or short in heated oxygen sensor (bank 1 sensor 1) circuit • Heated oxygen sensor (bank 1 sensor 1) • Air induction system • Fuel pressure • Injector • Gas leakage on exhaust system • ECM • PCV piping	○	○
P0130 (DI-48)	Heated Oxygen Sensor Circuit Malfunction (Bank 1 Sensor 1) (Except Calif.)	• Open or short in heated oxygen sensor circuit • Heated oxygen sensor • Air induction system • EGR system • Fuel pressure • Injector • ECM	○	○
P0133 (DI-52)	Oxygen Sensor Circuit Slow Response (Bank 1 Sensor 1)	• Open or short in heated oxygen sensor circuit • Heated oxygen sensor • Air induction system • EGR system • Fuel pressure • Injector • ECM	○	○

P0135 (DI-55)	Oxygen Sensor Heater Circuit Malfunction (Bank 1 Sensor 1)	• Open or short in heater circuit of heated oxygen sensor • Heated oxygen sensor heater • ECM	○	○
P0136 (DI-57)	Oxygen Sensor Circuit Malfunction (Bank 1 Sensor 2)	• Open or short in heated oxygen sensor circuit • Heated oxygen sensor	○	○
P0141 (DI-55)	Oxygen Sensor Heater Circuit Malfunction (Bank 1 Sensor 2)	• Same as DTC No. P0135	○	○
P0171 (DI-59)	System too Lean (Fuel Trim)	• Air induction system • Injector blockage • Mass air flow meter • Engine coolant temp. sensor • Fuel pressure • Gas leakage on exhaust system • Open or short in heated oxygen sensor (bank 1 sensor 1) circuit • Heated oxygen sensor (bank 1 sensor 1) • PCV piping	○	○
P0300 (DI-63)	Random/Multiple Cylinder Misfire Detected	• Open or short in engine wire • Connector connection • Vacuum hose connection • Ignition system • Injector • Fuel pressure • EGR system • Manifold absolute pressure sensor • Engine coolant temp. sensor • Compression pressure • Valve clearance • Valve timing • ECM • PCV piping	○	○
P0301 (DI-63)	Cylinder 1 Misfire Detected	• Open or short in engine wire • Connector connection • Vacuum hose connection • Ignition system • Injector • Fuel pressure • EGR system • Manifold absolute pressure sensor • Engine coolant temp. sensor • Compression pressure • Valve clearance • Valve timing • ECM • PCV piping	○	○
P0302 (DI-63)	Cylinder 2 Misfire Detected			
P0303 (DI-63)	Cylinder 3 Misfire Detected			
P0304 (DI-63)	Cylinder 4 Misfire Detected			
P0325 (DI-69)	Knock Sensor 1 Circuit Malfunction (Bank 1)	• Open or short in knock sensor 1 circuit • Knock sensor 1 (looseness) • ECM	○	○
P0335 (DI-72)	Crankshaft Position Sensor "A" Circuit Malfunction	• Open or short in crankshaft position sensor circuit • Crankshaft position sensor • Signal plate (Timing belt guide) • Crankshaft timing pulley • ECM	○	○

P0340 (DI-75)	Camshaft Position Sensor Circuit Malfunction	• Open or short in camshaft position sensor circuit • Camshaft position sensor • Camkshaft timing pulley • ECM	○	○
P0420 (DI-77)	Catalyst System Efficiency Below Threshold (Bank 1)	• Gas leakage on exhaust system • Open or short in heated oxygen sensor circuit • Heated oxygen sensor • Three-way catalytic converter	○	○
P0440 (DI-80)	Evaporative Emission Control System Malfunction	• Hose or tube cracked, hole, damaged or loose seal • Fuel tank cap incorrectly installed • Fuel tank cap cracked or damaged • Vacuum hose cracked, hole, blocked,damaged or disconnected • Fuel tank cracked, hole or damaged • Charcoal canister cracked, hole or damaged • Open or short in vapor pressure sensor circuit • Vapor pressure sensor • Fuel tank over fill check valve cracked or damaged • ECM	○	○
P0441 (DI-86)	Evaporative Emission Control System Incorrect Purge Flow	• Vacuum hose cracked, hole, blocked damaged or disconnected • Open or short in vapor pressure sensor circuit • Vapor pressure sensor • Open or short in VSV circuit for EVAP • VSV for EVAP • Open or short in VSV circuit for vapor pressure sensor • VSV for vapor pressure sensor • Charcoal canister cracked, hole or damaged • Fuel tank over fill check valve cracked or damaged • ECM	○	○
P0446 (DI-86)	Evaporative Emission Control System Vent Control Malfunction			
P0450 (DI-101)	Evaporative Emission Control System Pressure Sensor Malfunction	• Open or short in vapor pressure sensor circuit • Vapor pressure sensor • ECM	○	○
P0451 (DI-101)	Evaporative Emission Control System Pressure Sensor Range/ Performance			
P0500 (DI-103)	Vehicle Speed Sensor Malfunction	• Combination meter • Open or short in vehicle speed sensor circuit • Vehicle speed sensor • ECM	○	○
P0505 (DI-106)	Idle Control System Malfunction	• Open or short in IAC valve circuit • IAC valve is stuck or closed • Open or short in A/C switch circuit • Air induction system • ECM • PCV piping	○	○
P0550 (DI-111)	Power Steering Pressure Sensor Circuit Malfunction	• PS pressure sensor • ECM	○	○

*1: ○ · · · MIL lights up

MANUFACTURER CONTROLLED:

DTC No. (See Page)	Detection Item	Trouble Area	MIL*1	Memory
P1300 (DI-113)	Igniter Circuit Malfunction (No.1)	• Ignition system • Open or short in IGF1 and IGT1 circuit from No.1 ignition coil with igniter to ECM • No.1 ignition coil with igniter • ECM	○	○
P1305 (DI-113)	Igniter Circuit Malfunction (No.2)	• Ignition system • Open or short in IGF2 and IGT2 circuit from No.2 ignition coil with igniter to ECM • No.2 ignition coil with igniter • ECM	○	○
P1310 (DI-113)	Igniter Circuit Malfunction (No.3)	• Ignition system • Open or short in IGF2 and IGT3 circuit from No.3 ignition coil with igniter to ECM • No.3 ignition coil with igniter • ECM	○	○
P1315 (DI-113)	Igniter Circuit Malfunction (No.4)	• Ignition system • Open or short in IGF1 and IGT4 circuit from No.4 ignition coil with igniter to ECM • No.4 ignition coil with igniter • ECM	○	○
P1345 (DI-119)	VVT Sensor/Camshaft Position Sensor Circuit Malfunction (Bank 1)	• Open or short in VVT sensor circuit • VVT sensor • ECM	○	○
P1346 (DI-121)	VVT Sensor/Camshaft Position Sensor Circuit Range/Performance Problem (Bank 1)	• Mechanical system (Jumping teeth of timing belt, belt stretched) • ECM	○	○
P1349 (DI-122)	VVT System Malfunction (Bank 1)	• Valve timing • OCV • VVT controller assembly • ECM	○	○
P1520 (DI-129)	Stop Light Switch Signal Malfunction	• Short in stop light switch signal circuit • Stop light switch • ECM	○	○
P1600 (DI-132)	ECM BATT Malfunction	• Open in back up power source circuit • ECM	○	○
P1656 (DI-134)	OCV Circuit Malfunction (for VVT-i)	• Open or short in OCV circuit • OCV for VVT-i • ECM	○	○
P1780*2 (DI-137)	Park/Neutral Position Switch Malfunction	• Short in park/neutral position switch circuit • Park/neutral position switch • ECM	○	○

*1: ○ ・・・ MIL lights up

*2: A/T only

DI6VQ-02

ECM Power Source Circuit

CIRCUIT DESCRIPTION

When the ignition switch is turned ON, battery positive voltage is applied to the coil, closing the contacts of the EFI relay (Making: EFI) and supplying power to the terminal +B of the ECM.

WIRING DIAGRAM

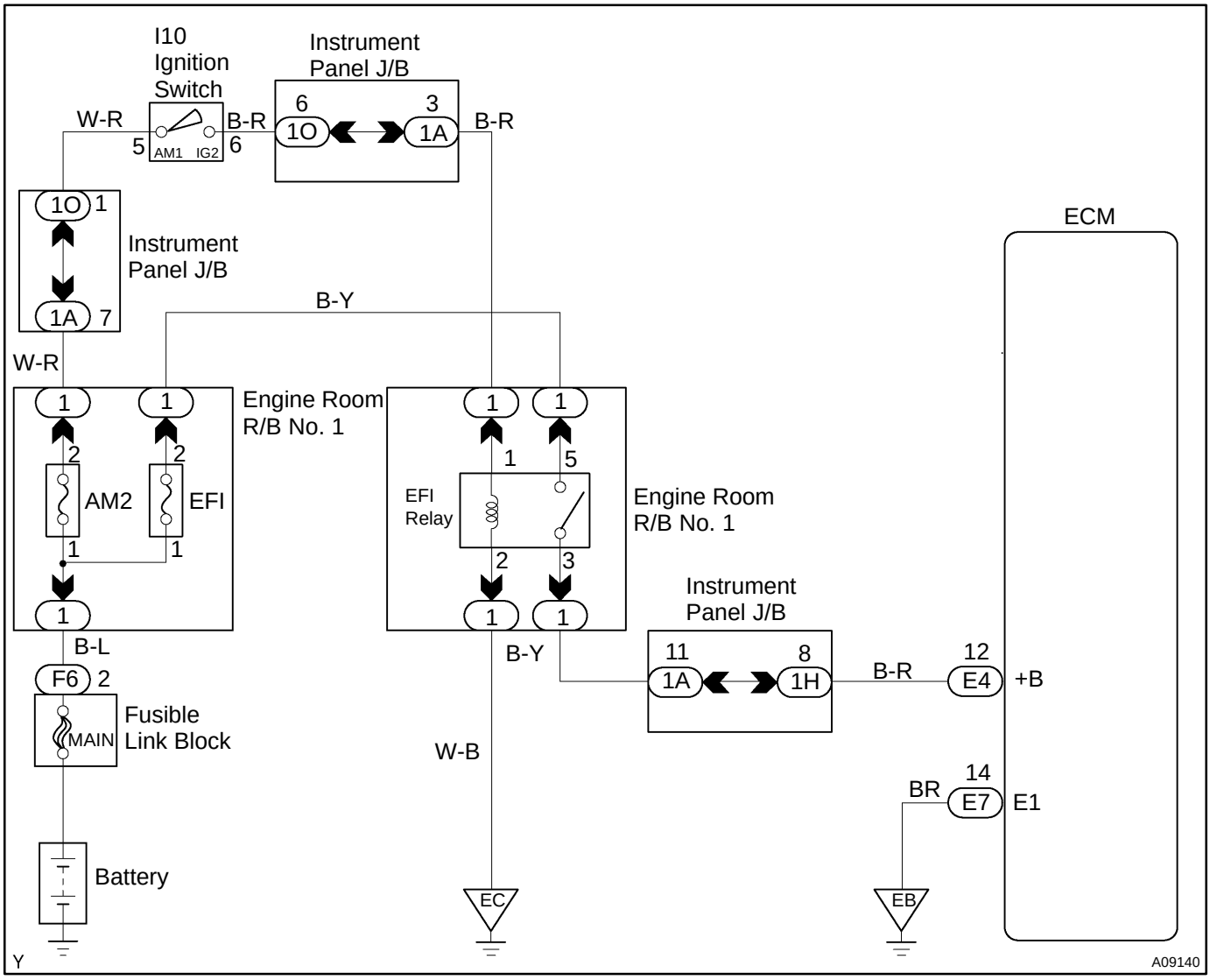

INSPECTION PROCEDURE

1	**Check voltage between terminals + B and E1 of ECM connector.**

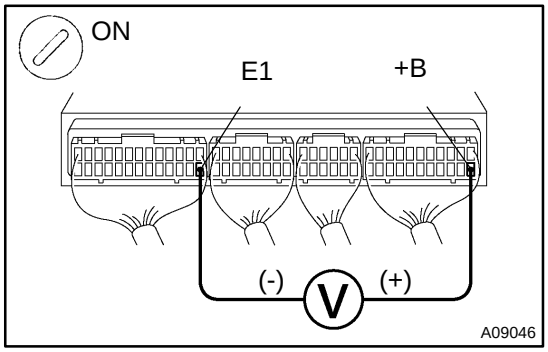

PREPARATION:

(a) Remove the connector cover from the ECM.

(b) Turn the ignition switch ON.

CHECK:

Measure voltage between terminals + B and E1 of the ECM connector.

OK:

Voltage: 9 - 14 V

OK → **Proceed to next circuit inspection shown on Problem symptoms table (See page DI-21).**

NG

2	**Check for open in harness and connector between terminal E1 of ECM and body ground (See page IN-29).**

NG → **Repair or replace harness or connector.**

OK

3	**Check EFI relay (Marking: EFI) (See page SF-47).**

NG → **Replace EFI relay.**

OK

4	**Check EFI fuse.**

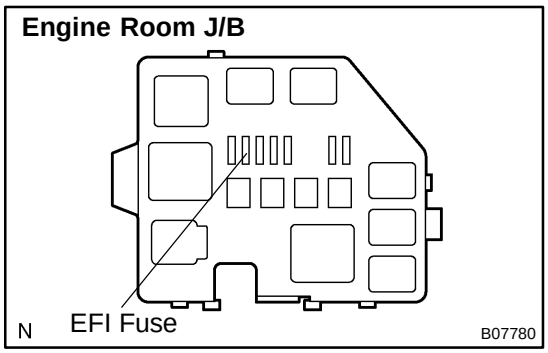

PREPARATION:
Remove IGN fuse from engine room J/B.
CHECK:
Check continuity of EFI No. 1 fuse.
OK:
Continuity

NG → **Check for short in all the harness and components connected to EFI fuse.**

OK →

5	**Check for open in harness and connector between EFI relay (Marking: EFI) and battery, EFI relay (Marking: EFI) and ECM (See page IN-29).**

NG → **Repair or replace harness or connector.**

OK →

6	**Check ignition switch (See page BE-15).**

NG → **Replace ignition switch.**

OK →

Check for open in harness and connector between IG switch and EFI relay and body ground (See page IN-29).

DI6VR-02

Fuel Pump Control Circuit

CIRCUIT DESCRIPTION

In the diagram below, when the engine is cranked, current flows from terminal ST of the ignition switch to the starter relay coil and also current flows to terminal STA of ECM (STA signal).
When the STA signal and NE signal are input to the ECM, Tr is turned ON, current flows to coil of the circuit opening relay, the relay switches on, power is supplied to the fuel pump and the fuel pump operates.
While the NE signal is generated (engine running), the ECM keeps Tr ON (circuit opening relay ON) and the fuel pump also keeps operating.

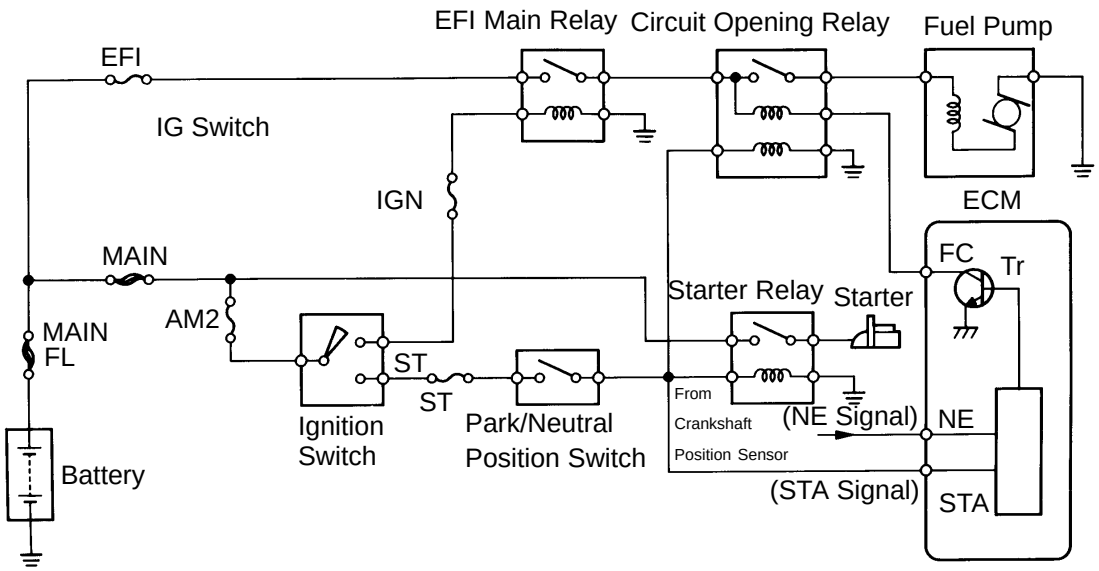

FI7241

WIRING DIAGRAM

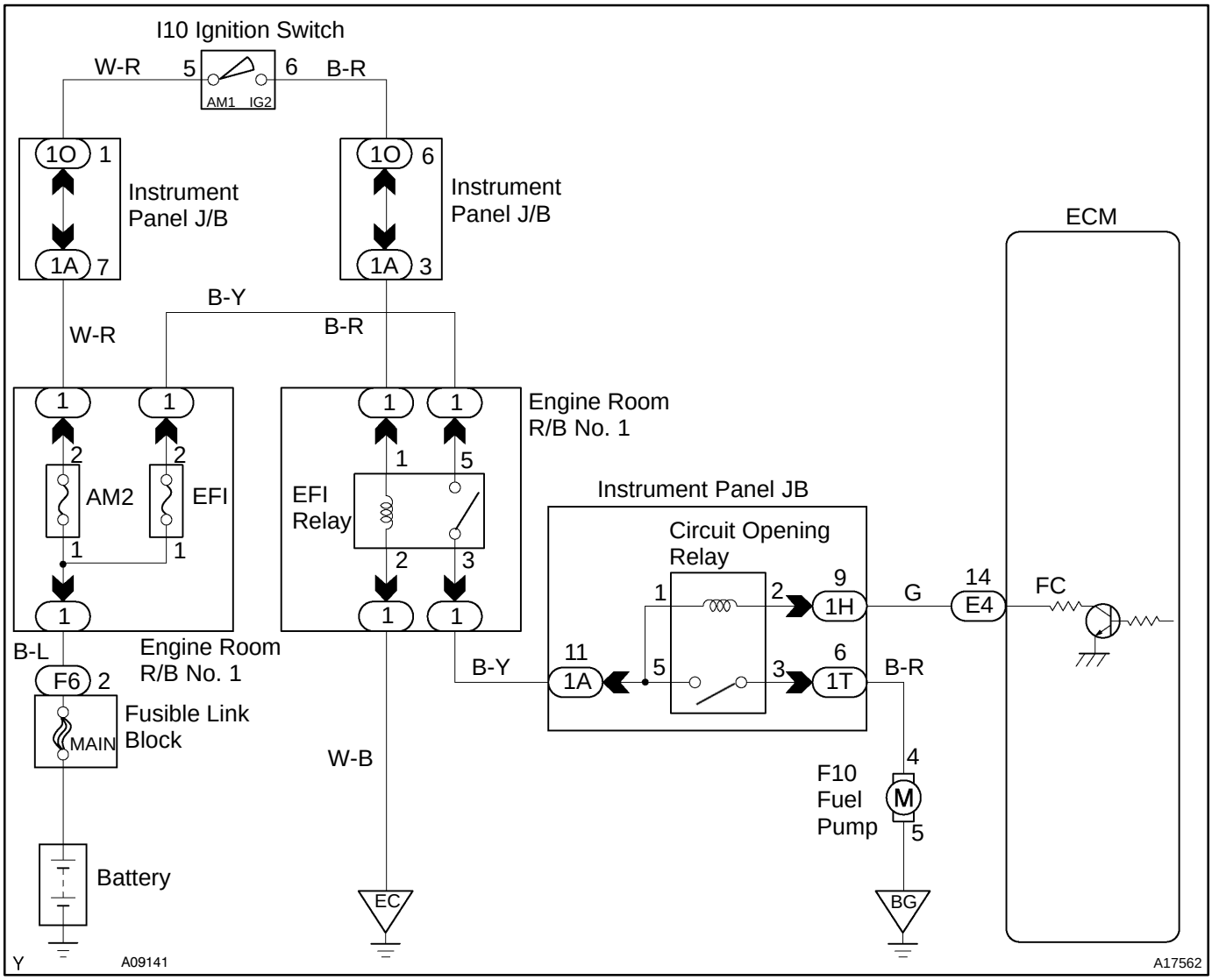

INSPECTION PROCEDURE

TOYOTA hand-held tester:

1	Connect the TOYOTA hand-held tester and check operation of fuel pump (See page DI-3).

OK → Proceed to next circuit inspection shown on problem symptoms table (See page DI-21).

NG

2	Check for ECM power source circuit (See page DI-138).

NG → Repair or replace.

OK

3	Check circuit opening relay (Marking: CIR OPN) (See page SF-48).

NG → Replace circuit opening relay.

OK

4	**Check voltage between terminal FC of ECM and body ground.**

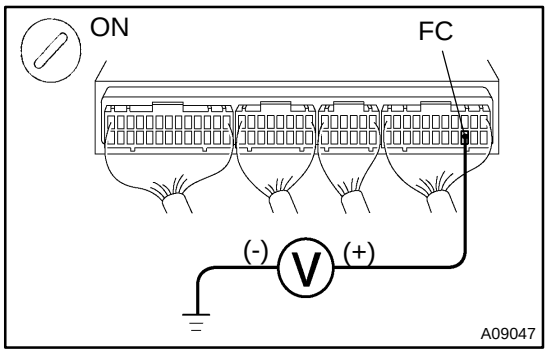

PREPARATION:

(a) Remove the connector cover from the ECM.

(b) Turn the ignition switch ON.

CHECK:

Measure voltage between terminal FC of the ECM and body ground.

OK:

Voltage 9 - 14 V

NG → **Check for open in harness and connector between EFI main relay and circuit opening relay and ECM (See page IN-29).**

OK

5	**Check fuel pump (See page SF-6).**

NG → **Repair or replace fuel pump.**

OK

6	**Check for open in harness and connector between circuit opening relay (Marking: CIR OPN) and fuel pump and body ground (See page IN-29).**

NG → **Repair or replace harness or connector.**

OK

Check and replace ECM (See page IN-29).

OBD II scan tool (excluding TOYOTA hand-held tester):

1	**Check operation of fuel pump.**

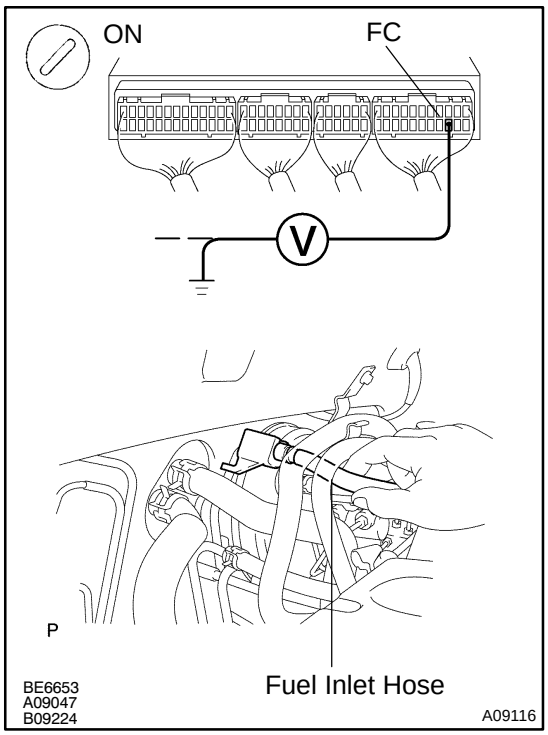

PREPARATION:

(a) Remove the connector cover from the ECM.

(b) Turn the ignition switch ON.

CHECK:

(a) Connect between terminal FC of the ECM connector and body ground.

(b) Check for fuel pressure in the fuel inlet hose when it is pinched off.

OK:

There is pressure in fuel inlet hose.

HINT:

At this time, you will hear a fuel return flowing noise.

OK	**Proceed to next circuit inspection shown on problem symptoms table (See page DI-21).**

NG

2	**Check for ECM power source circuit (See page DI-138).**

NG	**Repair or replace.**

OK

3	**Check circuit opening relay (Marking: CIR OPN) (See page SF-48).**

NG	**Replace circuit opening relay.**

OK

4	Check voltage between terminal FC of ECM and body ground (See page DI-141).

NG → Check for open in harness and connector between EFI main relay and circuit opening relay and ECM (See page IN-29).

OK

5	Check fuel pump (See page SF-6).

NG → Repair or replace fuel pump.

OK

6	Check for open in harness and connector between circuit opening relay (Marking: CIR OPN) and fuel pump and body ground (See page IN-29).

NG → Repair or replace harness or connector.

OK

Check and replace ECM (See page IN-29).

ENGINE

DI00F-23

HOW TO PROCEED WITH TROUBLESHOOTING

Troubleshoot in accordance with the procedure on the following page.

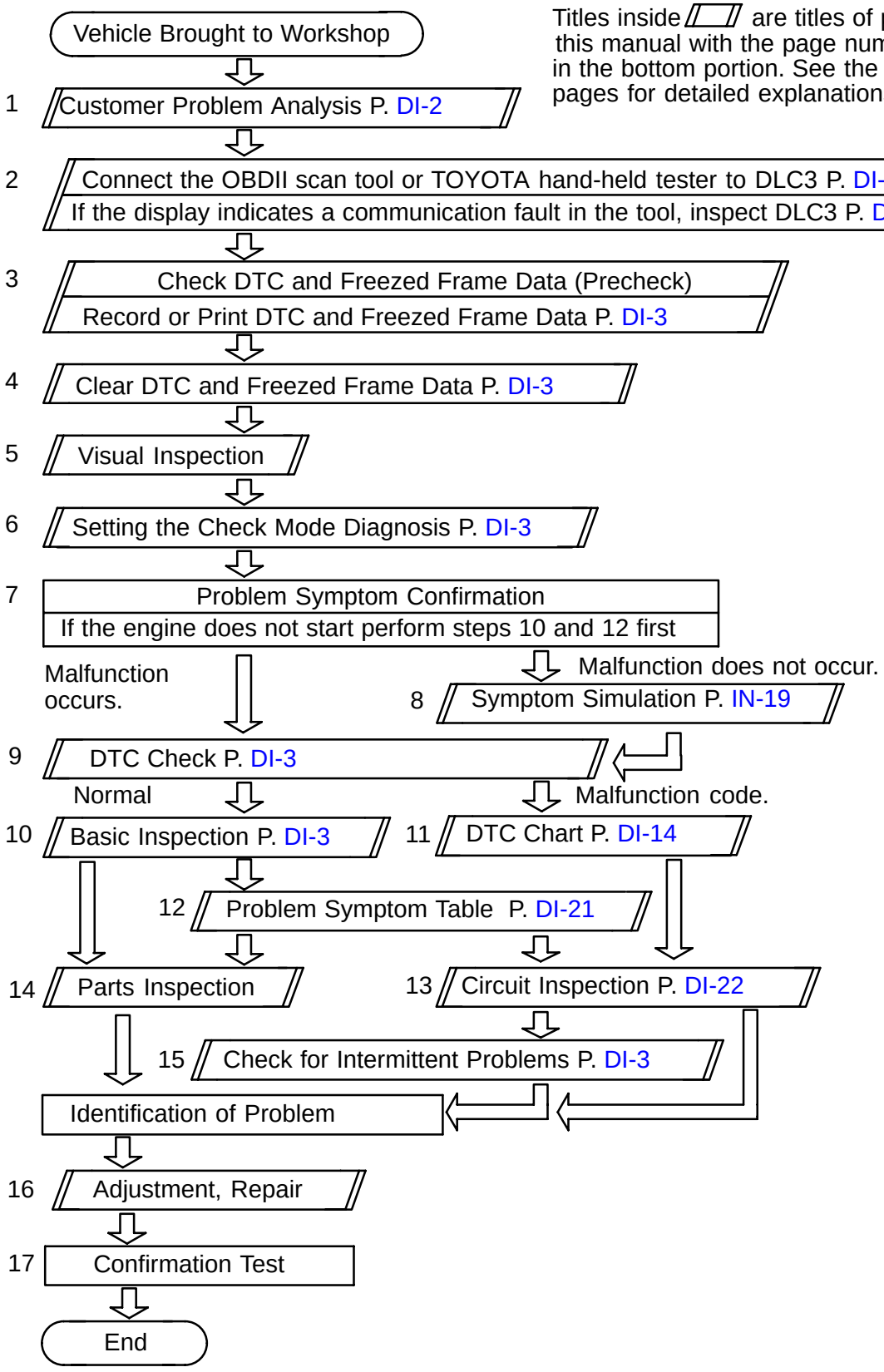

Titles inside ▱ are titles of pages in this manual with the page number indicated in the bottom portion. See the indicated pages for detailed explanations.

DI1E2-10

PARTS LOCATION

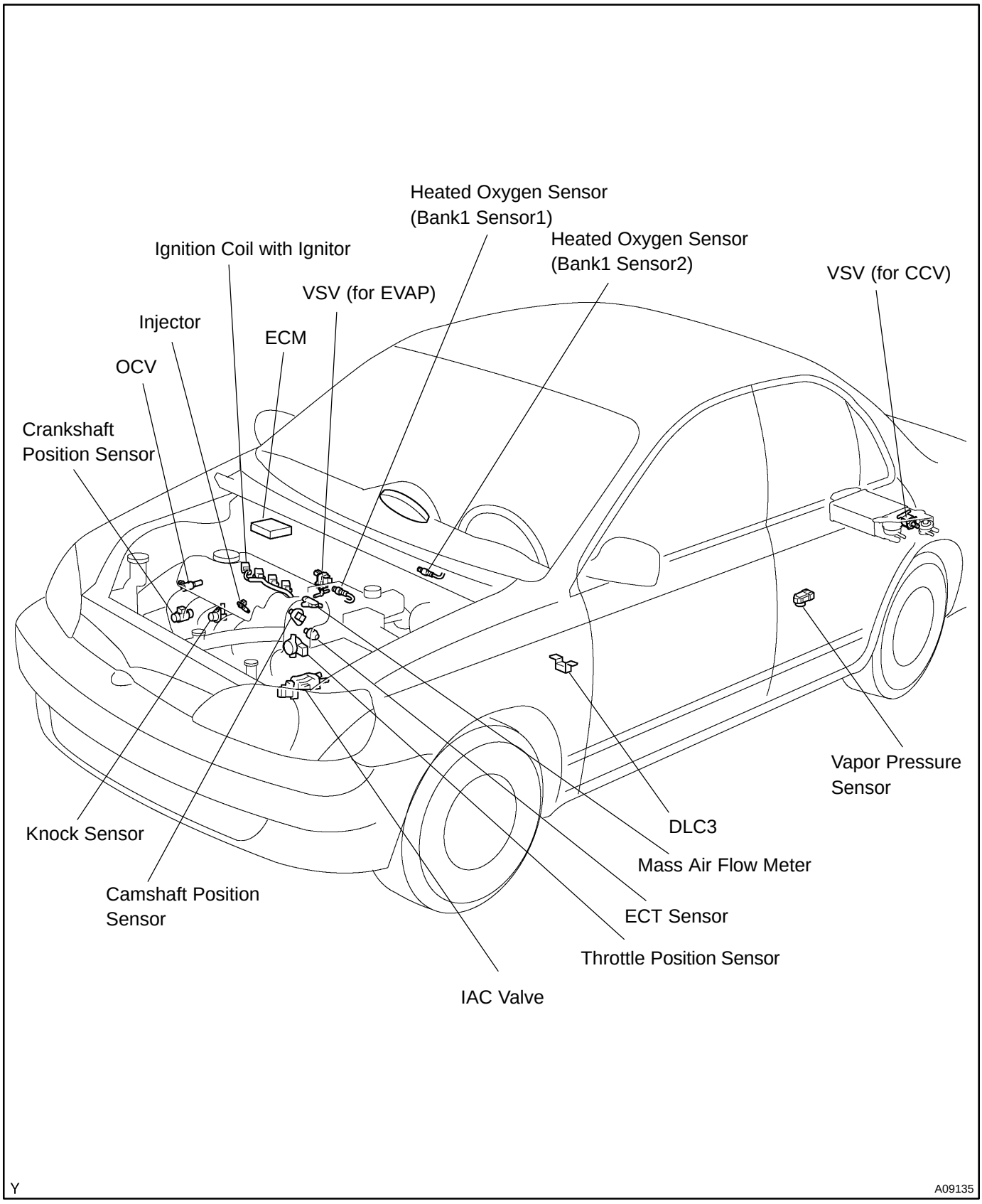

DI00H-21

PRE-CHECK

1. DIAGNOSIS SYSTEM

(a) Description

- When troubleshooting OBDII vehicles, the only difference from the usual troubleshooting procedure is that you connect to the vehicle the OBDII scan tool complying with SAE J1978 or TOYOTA hand-held tester, and read off various data output from the vehicle's ECM.

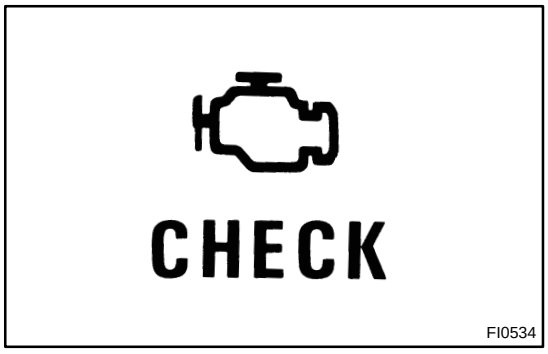

- OBDII regulations require that the vehicle's on-board computer lights up the Malfunction Indicator Lamp (MIL) on the instrument panel when the computer detects a malfunction in the emission control system/components or in the powertrain control components which affect vehicle emissions, or a malfunction in the computer. In addition to the MIL lighting up when a malfunction is detected, the applicable Diagnostic Trouble Code (DTC) prescribed by SAE J2012 are recorded in the ECM memory (See page DI-14).

If the malfunction does not reoccur in 3 consecutive trips, the MIL goes off automatically but the DTCs remain recorded in the ECM memory.

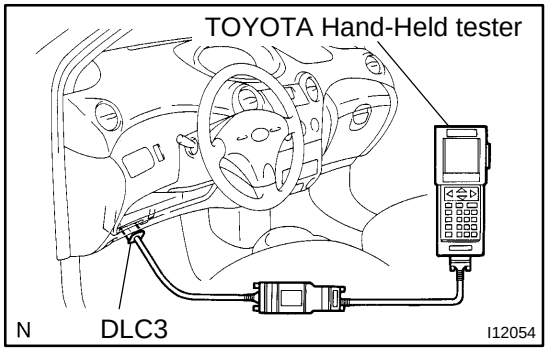

- To check the DTCs, connect the TOYOTA hand-held tester or OBDII scan tool to Data Link Connector 3 (DLC3) on the vehicle. The TOYOTA hand-held tester or OBDII scan tool also enables you to erase the DTCs and check freezed frame data and various forms of engine data. (For operating instructions, see the OBDII scan tool's instruction book.)
- DTCs include SAE controlled codes and manufacturer controlled codes. SAE controlled codes must be set as prescribed by the SAE, while manufacturer controlled codes can be set freely by the manufacturer within the prescribed limits (See DTC chart on page DI-14).

- The diagnosis system operates in normal mode during normal vehicle use. It also has a check mode for technicians to simulate malfunction symptoms and troubleshoot. Most DTCs use 2 trip detection logic* to prevent erroneous detection, and ensure thorough malfunction detection. By switching the ECM to check mode when troubleshooting, the technician can cause the MIL to light up for a malfunction that is only detected once or momentarily (TOYOTA hand-held tester only). (See step 2)
- *2 trip detection logic:
  When a malfunction is first detected, the malfunction is temporarily stored in the ECM memory (1st trip).

If the same malfunction is first detected again during the second drive test, this second detection causes the MIL to light up (2nd trip) (However, the IG switch must be turned OFF between the 1st trip and the 2nd trip.).

- Freeze frame data:
  Freeze frame data records the engine condition when a misfire (DTC P0300 - P0304) or fuel trim malfunction (DTC P0171) or other malfunction (first malfunction only), is detected.
- Because freeze frame data records the engine conditions (fuel system, calculated load, engine coolant temperature, fuel trim,engine speed, vehicle speed, etc.) when the malfunction is detected, when troubleshooting it is useful for determining whether the vehicle was running or stopped, the engine warmed up or not, the air-fuel ratio lean or rich, etc. at the time of the malfunction.

Priorities for troubleshooting:

If troubleshooting priorities for multiple DTCs are given in the applicable DTC chart, these should be followed.

If no instructions are given troubleshoot DTCs according to the following priorities.

(1) DTCs other than fuel trim malfunction (DTC P0171, P0172), and misfire (DTC P0300 - P0304).
(2) Fuel trim malfunction (DTC P0171).
(3) Misfire (DTC P0300 - P0304).

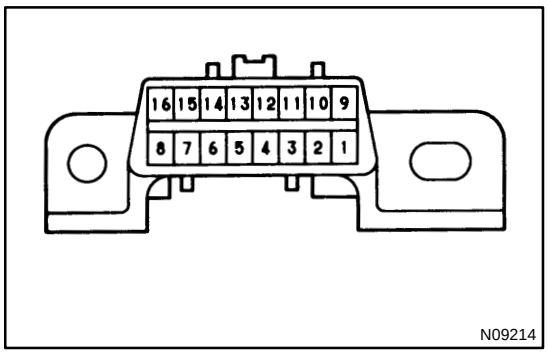

(b) Check the DLC3.
The vehicle's ECM uses ISO 9141-2 for communication. The terminal arrangement of DLC3 complies with SAE J1962 and matches the ISO 9141-2 format.

Terminal No.	Connection / Voltage or Resistance	Condition
7	Bus ⊕ Line / Pulse generation	During transmission
4	Chassis Ground / ↔ Body Ground 1 Ω or less	Always
5	Signal Ground / ↔ Body Ground 1 Ω or less	Always
16	Battery Positive / ↔ Body Ground 9 - 14 V	Always

HINT:
If your display shows "UNABLE TO CONNECT TO VEHICLE" when you have connected the cable of the TOYOTA hand-held tester or OBDII scan tool to DLC3, turned the ignition switch ON and operated the scan tool, there is a problem on the vehicle side or tool side.

- If communication is normal when the tool is connected to another vehicle, inspect DLC3 on the original vehicle.
- If communication is still not possible when the tool is connected to another vehicle, the problem is probably in the tool itself, so consult the Service Department listed in the tool's instruction manual.

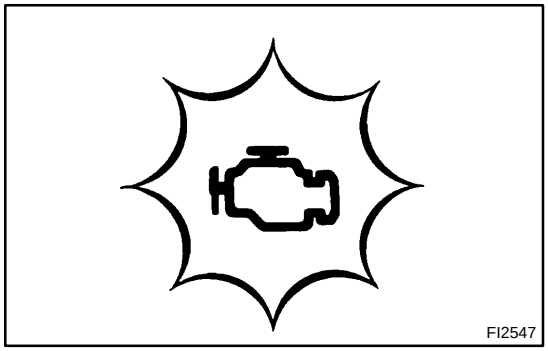

2. INSPECT DIAGNOSIS (Normal Mode)

(a) Check the MIL
(1) The MIL comes on when the ignition switch is turned ON and the engine is not running.

HINT:
If the MIL does not light up, troubleshoot the combination meter (See page BE-47).

(2) When the engine started, the MIL should go off. If the lamp remains on, the diagnosis system has detected a malfunction or abnormality in the system.

(b) Check the DTC.

NOTICE:

- **If there is no DTC in the normal mode, check the 1st trip DTC using Continuous Test Result function (Mode 7 for SAE J1979) or the TOYOTA hand-held tester or OBDII scan tool.**

- **TOYOTA hand-held tester only:**
  When the diagnosis system is switched from normal mode to check mode, it erases all DTCs and freezed frame data recorded in normal mode. So before switching modes, always check the DTCs and freezed frame data, and note them down.
  (1) Prepare the TOYOTA hand-held tester or OBDII scan tool (complying with SAE J1978).
  (2) Connect the TOYOTA hand-held tester or OBDII scan tool to DLC3 under the instrument panel lower pad.
  (3) Turn the ignition switch ON and turn the TOYOTA hand-held tester or OBDII scan tool switch ON.
  (4) Use the TOYOTA hand-held tester or OBDII scan tool to check the DTCs and freezed frame data; note them down. (For operating instructions, see the OBDII scan tool's instruction book.)
  (5) See step 4 to confirm the details of the DTCs.

NOTICE:

- **When simulating symptoms with an OBDII scan tool (excluding TOYOTA hand-held tester) to check the DTCs, use normal mode. For code on the DTC chart subject to "2 trip detection logic", perform the following either action.**
- **Turn the ignition switch OFF after the symptom is simulated the first time. Then repeat the simulation process again. When the problem has been simulated twice, the MIL lights up and the DTCs are recorded in the ECM.**
- **Check the 1st trip DTC using Mode 7 (Continuous Test Results) for SAE J1979.**

(c) Clear the DTC.
The DTCs and freezed frame data will be erased by either action.
  (1) Operating the TOYOTA hand-held tester or OBDII scan tool (complying with SAE J1978) to erase the codes. (See the OBDII scan tool's instruction book for operating instructions.)
  (2) Disconnecting the battery terminals or EFI fuse.

NOTICE:
If the TOYOTA hand-held tester switches the ECM from the normal mode to the check mode or vice-versa, or if the ignition switch is turned from ON to ACC or OFF during check mode, the DTCs and freezed frame data will be erased.

3. INSPECT DIAGNOSIS (Check Mode)

HINT:

TOYOTA hand-held tester only:

Compared to the normal mode, the check mode has an increased sensitivity to detect malfunctions.

Furthermore, the same diagnostic items which are detected in the normal mode can also be detected in the check mode.

Check the DTC.

(1) Initial conditions:
- Battery positive voltage 11 V or more.
- Throttle valve fully closed.
- Transmission in ”P” or ”N” position.
- A/C switched OFF.

(2) Turn the ignition switch OFF.

(3) Prepare the TOYOTA hand-held tester.

(4) Connect the TOYOTA hand-held tester to DLC3 under the instrument panel lower pad.

(5) Turn the ignition switch ON and switch the TOYOTA hand-held tester ON.

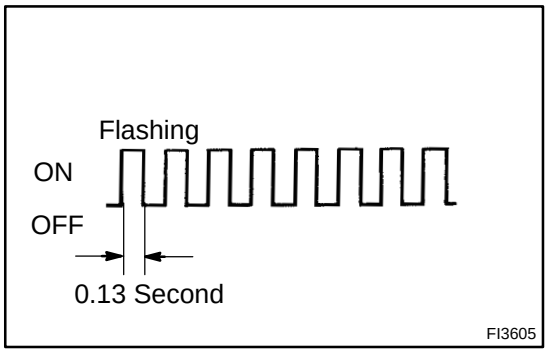

(6) Switch the TOYOTA hand-held tester normal mode to check mode (Check that the MIL flashes.).

NOTICE:

If the TOYOTA hand-held tester switches the ECM from the normal mode to the check mode or vice-versa, or if the ignition switch is turned from ON to ACC or LOCK during check mode, the DTCs and freezed frame data will be erased.

(7) Switch the engine. (The MIL goes out after the engine start.)

(8) Simulate the conditions of the malfunction described by the customer.

NOTICE:

Leave the ignition switch ON until you have checked the DTC, etc.

(9) After simulating the malfunction conditions, use the TOYOTA hand-held tester diagnosis selector to check the DTCs and freezed frame data, etc.

HINT:

Take care not to turn the ignition switch OFF. Turning the ignition switch OFF switches the diagnosis system from check mode to normal mode. so all DTCs, etc. are erased.

(10) After checking the DTC, inspect the applicable circuit.

4. FAIL-SAFE CHART

If any of the following codes is recorded, the ECM enters fail-safe mode.

DTC No.	Fail-Safe Operation	Fail-Safe Deactivation Conditions
P0100	Ignition timing fixed at 5˚ BTDC	Returned to normal condition
P0110	Intake air temp. is fixed at 20˚C (68˚F)	Returned to normal condition

P0115	Engine coolant temp. is fixed at 80˚C (176˚F)	Returned to normal condition
P0120	VTA is fixed at 0˚	The following condition must be repeated at least 2 times consecutively 0.1 V ≦ VTA ≦ 0.95 V
P0135 P0141	The heater circuit in which an abnormality is detected is turned off	Ignition switch OFF
P0325	Max. timing retardation	Ignition switch OFF
P1300 P1305 P1310 P1315	Fuel cut	IGF signal is detected for 2 consecutive ignitions

5. CHECK FOR INTERMITTENT PROBLEMS

HINT:

TOYOTA hand-held tester only:

By putting the vehicle's ECM in check mode, 1 trip detection logic is possible instead of 2 trip detection logic and sensitivity to detect open circuits is increased. This makes it easier to detect intermittent problems.

(a) Clear the DTC (See step 3).

(b) Set the check mode (See step 3).

(c) Perform a simulation test (See page IN-19).

(d) Check the connector and terminal (See page IN-29).

(e) Handle the connector (See page IN-29).

6. BASIC INSPECTION

When the malfunction code is not confirmed in the DTC check, troubleshooting should be performed in the order for all possible circuits to be considered as the causes of the problems. In many cases, by carrying out the basic engine check shown in the following flow chart, the location causing the problem can be found quickly and efficiently. Therefore, use of this check is essential in engine troubleshooting.

1	**Is battery positive voltage 11 V or more when engine is stopped?**

NO → **Charge or replace battery.**

YES

2	**Is engine cranked?**

NO → **Proceed to page ST-1 and continue to trouble-shoot.**

YES

3	**Does engine start?**

NO	**Go to step 7.**

YES

4	**Check air filter.**

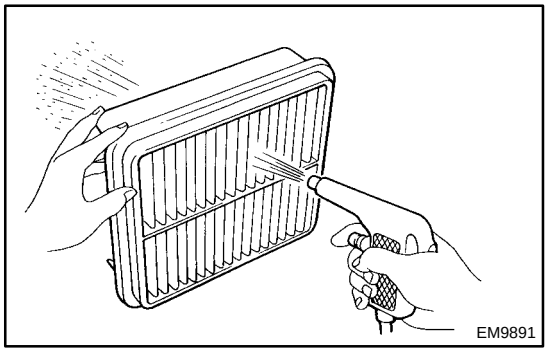

PREPARATION:
Remove the air filter.
CHECK:
Visual check that the air filter is not dirty or excessive oily.
HINT:
If necessary, clean the air filter with compressed air. First blow from inside thoroughly, then blow from outside of the air filter.

NG	**Repair or replace.**

OK

5	**Check engine idle speed.**

PREPARATION:
(a) Warm up engine to normal operating temperature.
(b) Switch off all accessories.
(c) Switch off A/C.
(d) Shift transmission into N position.
(e) Connect the TOYOTA hand-held tester or OBDII scan tool to DLC3 on the vehicle.

CHECK:
Use CURRENT DATA to check the idle speed.

OK:
Idle speed:
M/T 600 - 700 rpm
A/T 650 - 750 rpm

NG	**Proceed to problem symptoms table on page DI-21 .**

OK

6	Check ignition timing.

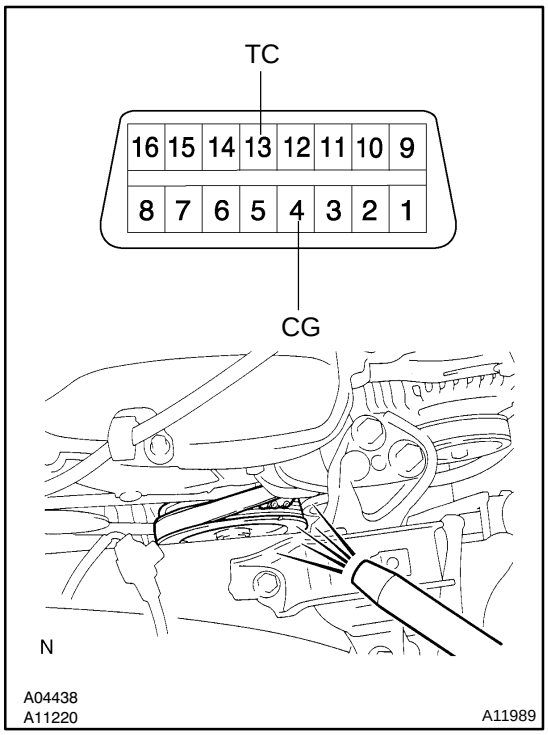

PREPARATION:

(a) Warm up engine to normal operating temperature.
(b) Shift transmission into N position.
(c) Keep the engine speed at idle.
(d) Using SST, connect terminals TE1 and E1 of DLC1.
SST 09843-18020
(e) Using a timing light, connect the tester to the ignition coil connector wire (See page EM-1 1).

CHECK:

Check ignition timing.

OK:

Ignition timing: 8 - 12˚ BTDC at idle

NG → **Proceed to page IG-1 and continue to trouble-shoot.**

OK

Proceed to problem symptoms table on page DI-21 .

7	Check fuel pressure.

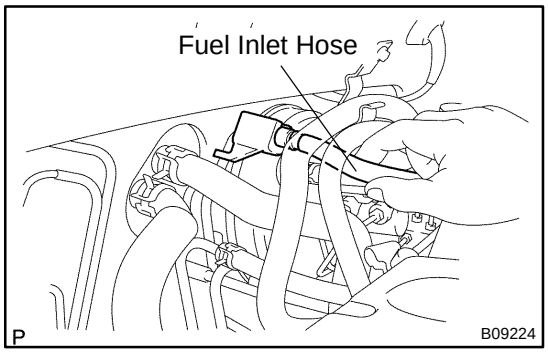

PREPARATION:

(a) Be sure that enough fuel is in the tank.
(b) Connect the TOYOTA hand-held tester to the DLC3.
(c) Turn the ignition switch ON and push the TOYOTA hand-held tester main switch ON.
(d) Use the ACTIVE TEST mode to operate the fuel pump.
(e) Please refer to the TOYOTA hand-held tester operator's manual for further details.
(f) If you have no TOYOTA hand-held tester, connect the positive (+) and negative (-) leads from the battery to the fuel pump connector (See page SF-6).

CHECK:

Check for fuel pressure in the fuel inlet hose when it is pinched off.

HINT:
At this time, you will hear a fuel flowing noise.

NG → **Proceed to page SF-6 and continue to trouble-shoot.**

OK

8	**Check for spark.**

PREPARATION:
(a) Remove the ignition coil (See page IG-5).
(b) Remove the spark plug.
(c) Install the spark plug to ignition coil and connect the ignition coil connector to ignition coil.
(d) Disconnect the injector connector.
(e) Be sure to ground the screw of the spark plug securely.

CHECK:
Check if spark occurs while engine is being cranked.

NOTICE:
- **Do not crash the electrode gap.**
- **To prevent excess fuel being injected from the injectors during this test, don't crank the engine for more than 5 - 10 seconds at a time.**

NG → **Proceed to page IG-1 and continue to trouble-shoot.**

OK

Proceed to problem symptoms table on page DI-21 .

7. ENGINE OPERATING CONDITION

NOTICE:

The values given below for "Normal Condition" are representative values, so a vehicle may still be normal even if its value varies from those listed here. So do not decide whether a part is faulty or not solely according to the "Normal Condition" here.

(a) CARB mandated signals.

TOYOTA hand-held tester display	Measurement Item	Normal Condition*
FUEL SYS #1	Fuel System Bank 1 OPEN: Air-fuel ratio feedback stopped CLOSED: Air-fuel ratio feedback operating	Idling after warming up: CLOSED
CALC LOAD	Calculator Load: Current intake air volume as a proportion of max. intake air volume	Idling: 10.0 - 30.0 % Racing without load (2,500rpm): 10.0 - 30.0 %
COOLANT TEMP.	Engine Coolant Temp. Sensor Value	After warming up: 80 - 95˚C (176 - 203˚F)
SHORT FT #1	Short-term Fuel Trim Bank 1	0 ± 20%
LONG FT #1	Long-term Fuel Trim Bank 1	0 ± 20%
ENGINE SPD	Engine Speed	Idling: MT 600 - 700 rpm AT 650 - 750 rpm
VEHICLE SPD	Vehicle Speed	Vehicle Stopped: 0 km/h (0 mph)
IGN ADVANCE	Ignition Advance: Ignition Timing of Cylinder No. 1	Idling: BTDC 0 - 14˚
INTAKE AIR	Intake Air Temp. Sensor Value	Equivalent to Ambient Temp.
MAF/AFM	Air Flow Rate Through Mass Flow Meter	Idling: 1.0 - 3.0 gm/sec.Racing without load (2,500 rpm): 3.0 - 8.0 gm/sec.
THROTTLE POS	Voltage Output of Throttle Position Sensor Calculated as a percentage: 0 V → 0%, 5 V → 100%	Throttle Fully Closed: 0 - 5 % Throttle Fully Open: 90 - 100 %
O2S B1, S1	Voltage Output of Heated Oxygen Sensor Bank 1, Sensor 1	Idling: 0.1 - 0.9 V
O2FT B1, S1	Heated Oxygen Sensor Fuel Trim Bank 1, Sensor 1 (Same as SHORT FT #1)	0 ± 20 %
O2S B1, S2	Voltage Output of Heated Oxygen Sensor Bank 1, Sensor 2	Driving at 50 km/h (31 mph): 0.1 - 0.9 V

*: If no conditions are specifically stated for "Idling", it means the shift lever is at N or P position, the A/C switch is OFF and all accessory switches are OFF.

(b) TOYOTA Enhanced Signals.

TOYOTA hand-held tester display	Measurement Item	Normal Condition*
MISFIRE RPM	Engine RPM for first misfire range	Misfire 0: 0 rpm
MISFIRE LOAD	Engine load for first misfire range	Misfire 0: 0 g/r
INJECTOR	Fuel injection time for cylinder No.1	Idling: 1.0 - 3.0 ms
IAC DUTY RATIO	Intake Air Control Valve Duty Ratio Opening ratio rotary solenoid type IAC valve	Idling: 20 - 40 %
STARTER SIG	Starter Signal	Cranking: ON
A/C SIG	A/C Switch Signal	A/C ON: ON
PNP SIG	Park/Neutral Position Switch Signal	P or N position: ON
STOP LIGHT SW	Stop Light Switch Signal	Stop light switch ON: ON
FC IDL	Fuel Cut Idle: Fuel cut when throttle valve fully closed, during deceleration	Fuel cut operating: ON
FC TAU	Fuel Cut TAU: Fuel cut during very light load	Fuel cut operating: ON

CYL#1, CYL#2, CYL#3, CYL#4	Abnormal revolution variation for each cylinder	0 %
IGNITION	Total number of ignition for every 1,000 revolutions	0 - 2,000
FUEL PUMP	Fuel Pump Signal	Idling: ON
EVAP (PURGE) VSV	EVAP VSV Signal	VSV operating: ON
VAPOR PRESS VSV	Vapor Pressure VSV Signal	VSV operating: ON
TOTAL FT B1	Total Fuel Trim Bank 1: Average value for fuel trim system of bank 1	Idling: 0.8 - 1.2 V
O2 LR B1, S1 *	Heated Oxygen Sensor Lean Rich Bank 1, Sensor 1 Response time for oxygen sensor output to switch from lean to rich	Idling after warmed up: 0 - 1,000 msec.
O2 RL B1, S1 *	Heated Oxygen Sensor Rich Lean Bank 1, Sensor 1 Response time for oxygen sensor output to switch from rich to lean	Idling after warmed up: 0 - 1,000 msec.

*: If no conditions are specifically stated for ”Idling”, it means the shift lever is at N or P position, the A/C switch is OFF and all accessory switches are OFF.

DI00L-13

PROBLEM SYMPTOMS TABLE

Symptom	Suspect Area	See page
Does not start (Engine does not crank)	6. Starter 7. Starter relay	ST-1 ST-19
Does not start (No initial combustion)	1. ECM power source circuit 2. Fuel pump control circuit	DI-138 DI-141
Does not start (No complete combustion)	1. Fuel pump control circuit	DI-141
Difficult to start (Engine cranks normally)	1. Starter signal circuit 2. Fuel pump control circuit 3. Compression	- DI-141 EM-3
Difficult to start (Cold engine)	1. Starter signal circuit 2. Fuel pump control circuit	- DI-141
Difficult to start (Hot engine)	1. Starter signal circuit 2. Fuel pump control circuit	- DI-141
Poor idling (High engine idle speed)	1. A/C switch circuit 2. ECM power source circuit	AC-75 DI-138
Poor idling (Low engine idle speed)	1. A/C switch circuit 2. Fuel pump control circuit	AC-75 DI-141
Poor idling (Rough idling)	1. Compression 2. Fuel pump control circuit	EM-3 DI-141
Poor idling (Hunting)	1. ECM power source circuit 2. Fuel pump control circuit	DI-138 DI-141
Poor driveability (Hesitation/Poor acceleration)	1. Fuel pump control circuit 2. A/T faulty 3. A/C cut control circuit	DI-141 DI-163 -
Poor driveability (Surging)	1. Fuel pump control circuit	DI-141
Engine stall (Soon after starting)	1. Fuel pump control circuit	DI-141
Engine stall (During A/C operation)	1. A/C switch circuit	AC-75
Unable to refuel/ Difficult to refuel	1. ORVR system	EC-5

DI6UU-03

TERMINALS OF ECM

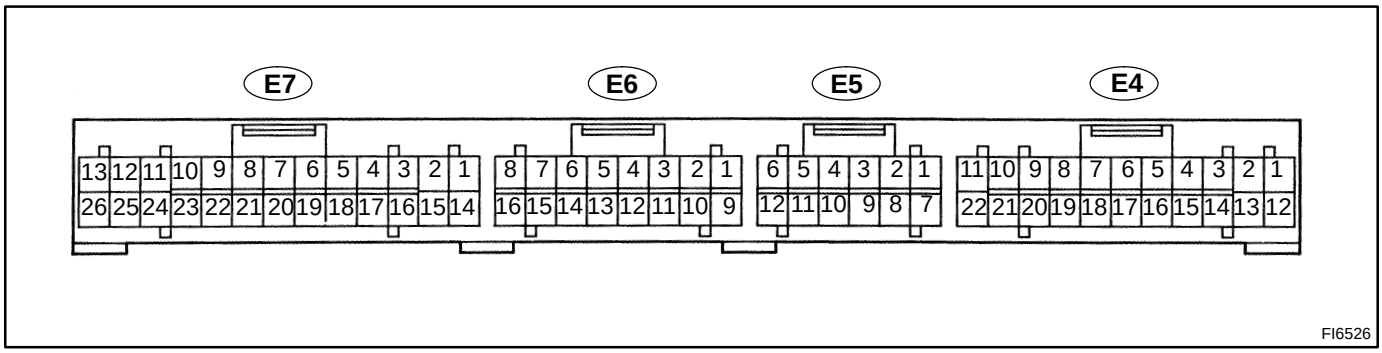

Symbols (Terminal No.)	Wiring Color	Condition	STD Voltage (V)
BATT (E4 - 1) - E1 (E7 - 14)	B-Y ↔ BR	Always	9 - 14
+B (E4 - 12) - E1 (E7 - 14)	B-R ↔ BR	IG switch ON	9 - 14
VC (E6 - 1) - E2 (E6 - 9)	R-W ↔ BR	IG switch ON	4.5 - 5.5
VTA (E6 - 11) - E2 (E6 - 9)	Y-R ↔ BR	IG switch ON Throttle valve fully closed	0.3 - 1.0
		IG switch ON Throttle valve fully open	3.2 - 4.9
VG (E6 - 2) - E2 (E6 - 9)	P ↔ BR	Idling, A/C switch OFF, Shift position in N or P position	1.1 - 1.5
THA (E6 - 3) - E2 (E6 - 9)	Y-B ↔ BR	Idling, Intake air temp. 20˚C (68˚F)	0.5 - 3.4
THW (E6 - 4) - E2 (E6 - 9)	R-L ↔ BR	Idling, Engine coolant temp. 80˚C (176˚F)	0.2 - 1.0
STA (E4 - 11) - E1 (E7 - 14)	B ↔ BR	Cranking	6.0 or more
#10 (E7 - 12) - E01 (E7 - 13)	B-O ↔ BR	IG switch ON	9 - 14
		Idling	Pulse generation (See page DI-63)
#20 (E7 - 11) - E01 (E7 - 13)	B-Y ↔ BR	IG switch ON	9 - 14
		Idling	Pulse generation (See page DI-63)
#30 (E7 - 25) - E01 (E7 - 13)	B-W ↔ BR	IG switch ON	9 - 14
		Idling	Pulse generation (See page DI-63)
#40 (E7 - 24) - E01 (E7 - 13)	B-L ↔ BR	IG switch ON	9 - 14
		Idling	Pulse generation (See page DI-63)
IGT1 (E7 - 22) - E1 (E7 - 14)	G-R ↔ BR	Idling	Pulse generation (See page DI-113)
IGT2 (E7 - 21) - E1 (E7 - 14)	G-B ↔ BR	Idling	Pulse generation (See page DI-113)
IGT3 (E7 - 20) - E1 (E7 - 14)	G-O ↔ BR	Idling	Pulse generation (See page DI-113)
IGT4 (E7 - 19) - E1 (E7 - 14)	G-Y ↔ BR	Idling	Pulse generation (See page DI-113)
IGF (E7 - 3) - E1 (E7 - 14)	Y ↔ BR	IG switch ON	4.5 - 5.5
		Idling	Pulse generation (See page DI-113)
G2 (E7 - 18) - NE⊖ (E7 - 16)	B ↔ W	Idling	Pulse generation (See page DI-72)

NE (E7 - 17) - NE- (E7 - 16)	O ↔ W	Idling	Pulse generation (See page DI-72)
FC (E4 - 14) - E01 (E7 - 13)	G ↔ BR	IG switch ON	9 - 14
EVP1 (E7 - 9) - E1 (E7 - 14)	W-G ↔ BR	IG switch ON	9 - 14
RSD (E7 - 2) - E1 (E7 - 14)	B-R ↔ BR	IG switch ON Disconnect E5 of ECU connector	0 - 3
OX1A (E6 - 6) - E2 (E6 - 9)	R ↔ BR	Maintain engine speed at 2,500 rpm for 2 min. after warming up	Pulse generation (See page DI-43)
OX1B (E6 - 5) - E2 (E6 - 9)	B ↔ BR	Maintain engine speed at 2,500 rpm for 2 min. after warming up	Pulse generation (See page DI-43)
HT (E6 - 8) - E03 (E7 - 1)	O ↔ BR	Idling	Below 3.0
		IG switch ON	9 - 14
HT2 (E6 - 16) - E03 (E7 - 1)	W ↔ BR	Idling	Below 3.0
		IG switch ON	9 - 14
KNK1 (E6 - 13) - E2 (E6 - 9)	W ↔ BR	Idling	Pulse generation (See page DI-69)
* NSW (E4 - 22) - E1 (E7 - 14)	B ↔ BR	IG switch ON Other shift position in P or N position	9 - 14
		IG switch ON Shift position in P or N position	0 - 3.0
SPD (E4 - 9) - E1 (E7 - 14)	V-W ↔ BR	IG switch ON Rotate driving wheel slowly	Pulse generation (See page DI-103)
W (E4 - 5) - E1 (E7 - 14)	Y-R ↔ BR	Idling	9 - 14
		IG switch ON	Below 3.0
ACT (E4 - 21) - E1 (E7 - 14)	B ↔ BR	A/C switch OFF	Below 2.0
		A/C switch ON at idling	9 - 14
AC (E4 - 10) - E1 (E7 - 14)	B-W ↔ BR	A/C switch ON at idling	Below 1.5
		A/C switch OFF	7.5 - 14
STP (E7 - 6) - E1 (E7 - 14)	G-W ↔ BR	IG switch ON, Brake pedal is depressed	7.5 - 14
		IG switch ON, Brake pedal is released	Below 1.5
PSP (E6 - 12) - E2 (E6 - 9)	Y ↔ BR	PS pressure 0 kPa (0 kgf/cm^2, 0 psi)	0.5 V
		PS pressure 3,500 kPa (36 kgf/cm^2, 512 psi)	2.5 V
		PS pressure 7,000 kPa (71 kgf/cm^2, 1,010 psi)	4.5 V
CCV (E4 - 3) - E1 (E7 - 14)	L ↔ BR	IG switch ON	9 - 14
VG (E6 - 2) - EVG (E6 - 10)	P ↔ V	Idling, A/C switch OFF	1.1 - 1.5
OCV+ (E7 - 10) - OCV- (E7 - 23)	R-W ↔ R-B	IG switch ON	Pulse generation (See page DI-122)

*: Only for A/T

DI6PU-04

DTC	B1142/B1143/34	Door Side Airbag Sensor (RH) Malfunction (2-Door only)

CIRCUIT DESCRIPTION

The door side airbag sensor (RH) circuit consists of the airbag sensor assembly and door side airbag sensor (RH).
For details of the function of each component, see OPERATION on page RS-2 .
DTC B1142/B1143/34 is recorded when a malfunction is detected in the door side airbag sensor (RH) circuit.

DTC No.	DTC Detecting Condition	Trouble Area
B1142/B1143/34	• Door side airbag sensor (RH) malfunction	• Door side airbag sensor (RH) • Airbag sensor assembly • Instrument panel wire harness • RH front door wire harness

WIRING DIAGRAM

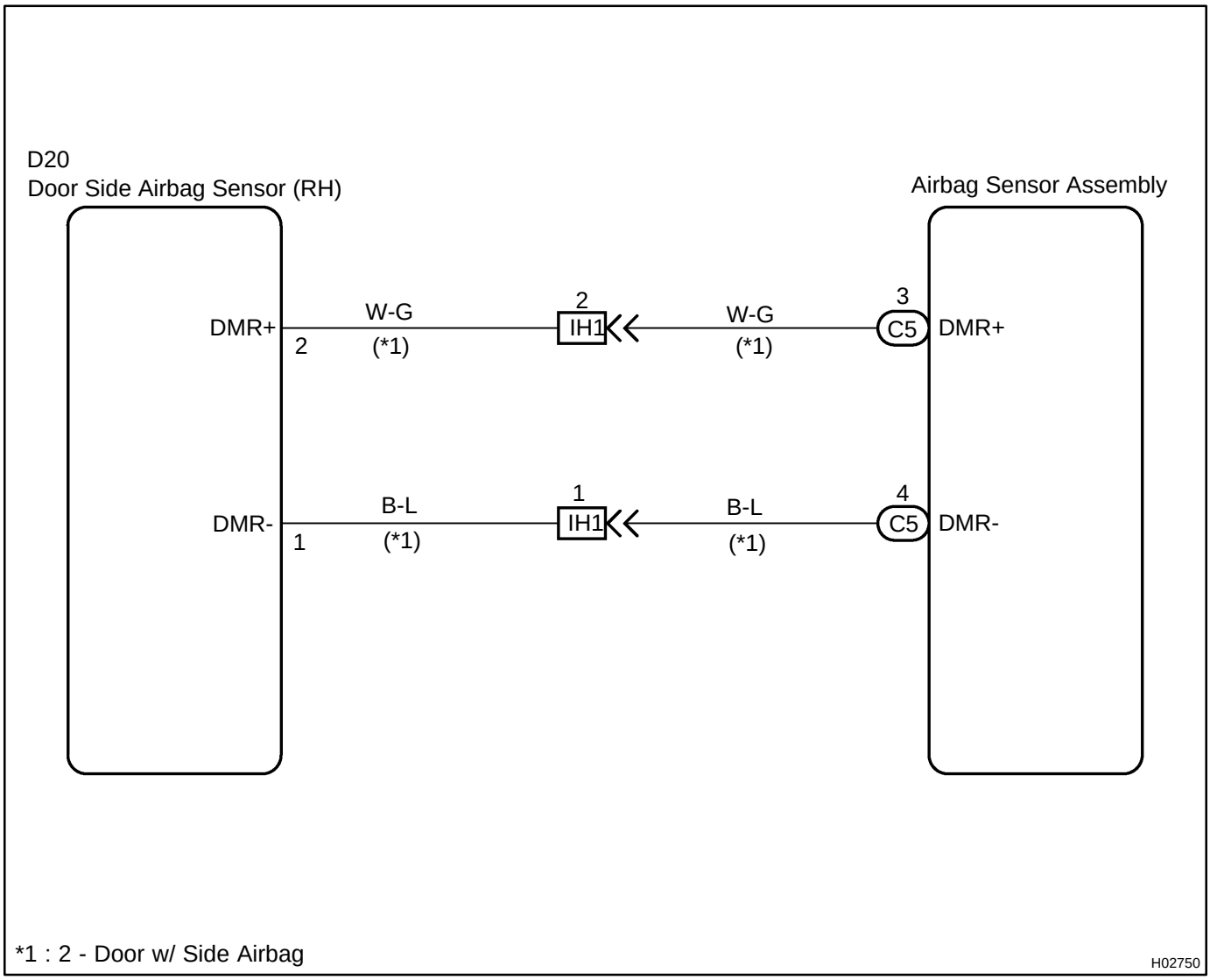

INSPECTION PROCEDURE

1	**Prepare for inspection (See step 1 on page DI-390).**

2	**Check wire harness (to B+).**

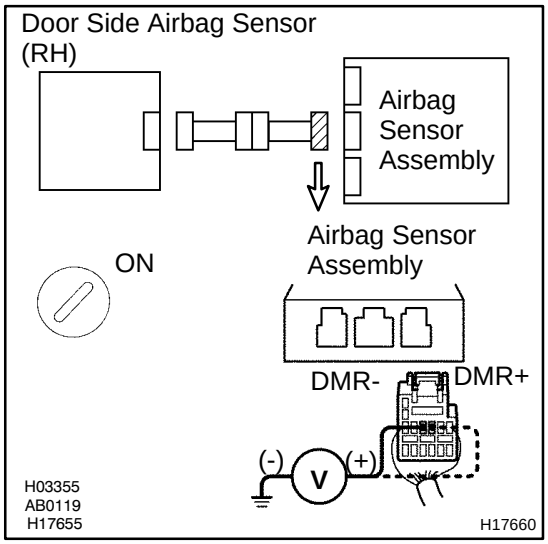

CHECK:

(a) Turn the ignition switch to ON.

(b) For the connector (on the airbag sensor assembly side) between the door side airbag sensor (RH) and the airbag sensor assembly, measure the voltage between body ground and each of DMR+ and DMR-.

OK:

Voltage: Below 1 V

NG → **Go to step 8.**

OK

3	**Check wire harness (to ground).**

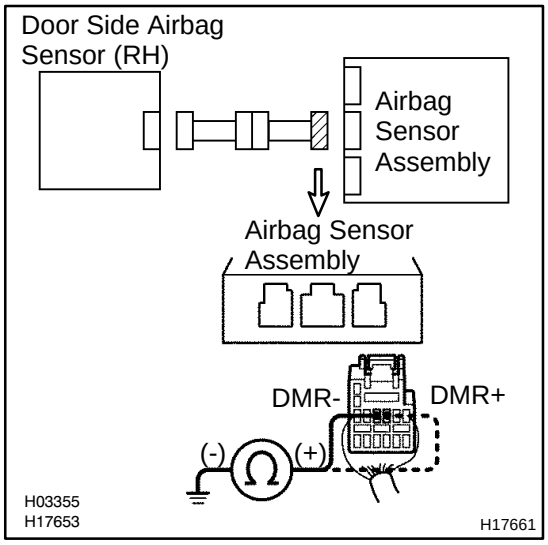

CHECK:

For the connector (on the airbag sensor assembly side) between the door side airbag sensor (RH) and the airbag sensor assembly, measure the resistance between body ground and each of DMR+ and DMR-.

OK:

Resistance: 1 MΩ or Higher

NG → **Go to step 9.**

OK

4	Check wire harness.

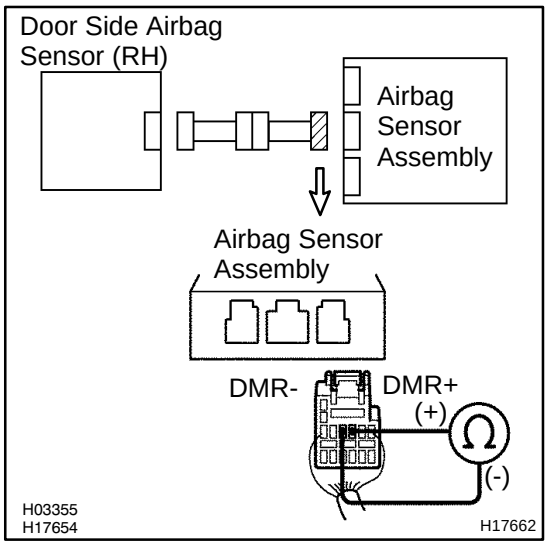

CHECK:

For the connector (on the airbag sensor assembly side) between the door side airbag sensor (RH) and the airbag sensor assembly, measure the resistance between DMR+ and DMR-.

OK:

Resistance: 1 MΩ or Higher

NG → **Go to step 10.**

OK

5	Check wire harness.

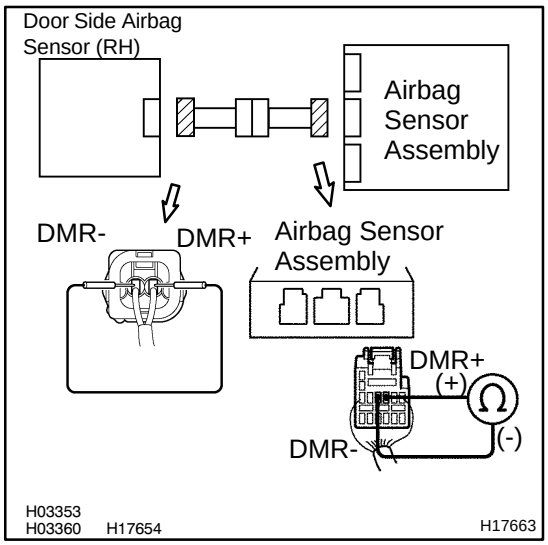

PREPARATION:

Using a service wire, connect DMR+ and DMR- of the connector (on the door side airbag sensor (RH) side) between the airbag sensor assembly and the door side airbag sensor (RH).

CHECK:

For the connector (on the airbag sensor assembly side) between the door side airbag sensor (RH) and the airbag sensor assembly, measure the resistance between DMR+ and DMR-.

OK:

Resistance: Below 1 Ω

NG → **Go to step 11.**

OK

6	**Check door side airbag sensor (RH).**

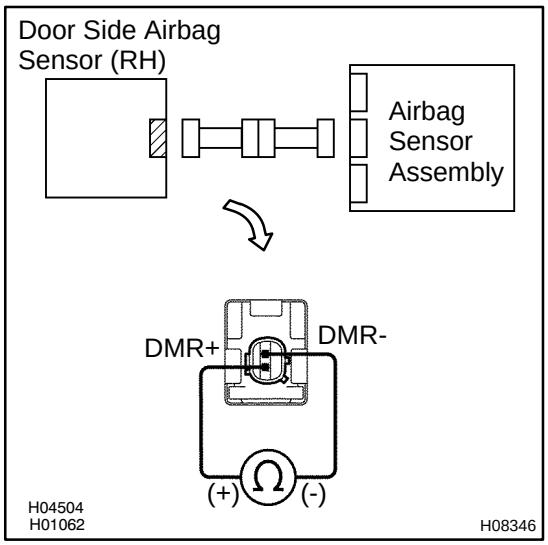

CHECK:

For the connector of the door side airbag sensor (RH), measure the resistance between DMR+ and DMR-.

OK:

Resistance: 300 - 1500 Ω

NG → **Replace door side airbag sensor (RH).**

OK

7	Check airbag sensor assembly.

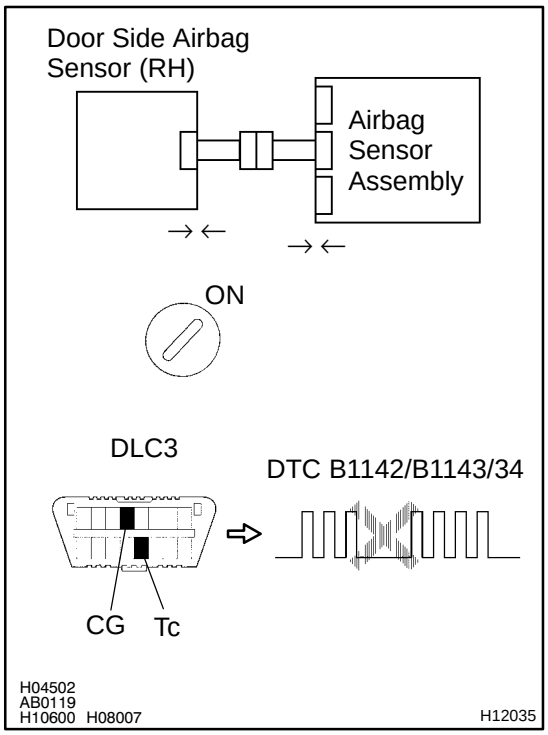

PREPARATION:

(a) Turn the ignition switch to LOCK.
(b) Disconnect negative (-) terminal cable from the battery, and wait at least for 90 seconds.
(c) Connect the door side airbag sensor (RH) connector and airbag sensor assembly connector.
(d) Connect negative (-) terminal cable to the battery, and wait at least for 2 seconds.

CHECK:

(a) Turn the ignition switch to ON, and wait at least for 20 seconds.
(b) Clear the DTC stored in memory (See page DI-239).
(c) Turn the ignition switch to LOCK, and wait at least for 20 seconds.
(d) Turn the ignition switch to ON, and wait at least for 20 seconds.
(e) Check the DTC (See page DI-239).

OK:

DTC 34 is not output.

HINT:
Codes other than code 34 may be output at this time, but they are not relevant to this check.

NG → **Replace airbag sensor assembly.**

OK →

From the results of the above inspection, the malfunctioning part can now be considered normal. To make sure of this, use the simulation method to check.

8	Check RH front door wire harness (to B+).

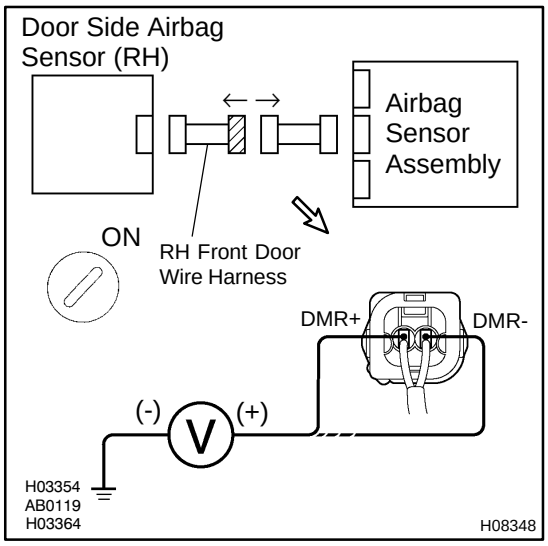

PREPARATION:

Disconnect the RH front door wire harness connector on the airbag sensor assembly side.

CHECK:

(a) Turn the ignition switch to ON.

(b) For the connector (on the RH front door wire harness side) between the airbag sensor assembly and the RH front door wire harness, measure the voltage between body ground and each of DMR+ and DMR-.

OK:

Voltage: Below 1 V

NG	Repair or replace RH front door wire harness.

OK

Repair or replace harness or connector between airbag sensor assembly and RH front door wire harness.

9	Check RH front door wire harness (to ground).

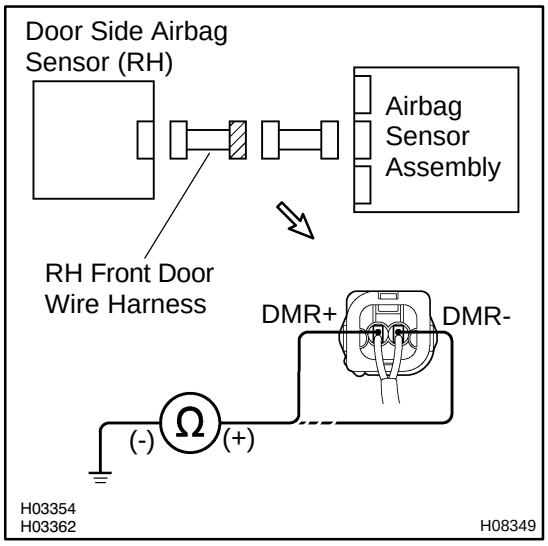

PREPARATION:

Disconnect the RH front door wire harness connector on the airbag sensor assembly side.

CHECK:

For the connector (on the RH front door wire harness side) between the airbag sensor assembly and the RH front door wire harness, measure the resistance between body ground and each of DMR+ and DMR-.

OK:

Resistance: 1 MΩ or Higher

NG	Repair or replace RH front door wire harness.

OK

Repair or replace harness or connector between airbag sensor assembly and RH front door wire harness.

10	Check RH front door wire harness.

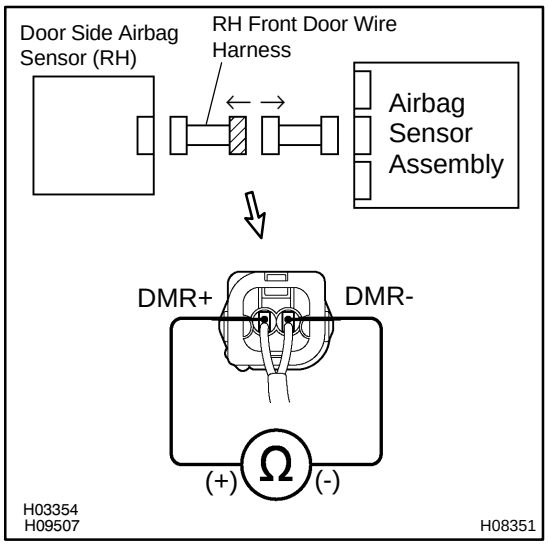

PREPARATION:

Disconnect the RH front door wire harness connector on the airbag sensor assembly side.

CHECK:

For the connector (on the RH front door wire harness side) between the airbag sensor assembly and the RH front door wire harness, measure the resistance between DMR+ and DMR-.

OK:

Resistance: 1 MΩ or Higher

NG → **Repair or replace RH front door wire harness.**

OK

Repair or replace harness or connector between airbag sensor assembly and RH front door wire harness.

11	**Check RH front door wire harness.**

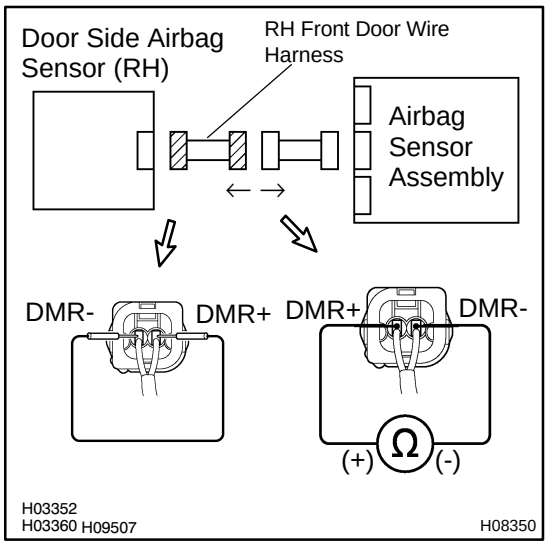

PREPARATION:

(a) Disconnect the RH front door wire harness connector on the airbag sensor assembly side.

(b) Using a service wire, connect DMR+ and DMR- of the connector (on the RH front door wire harness side) between the RH front door wire harness and the door side airbag sensor (RH).

CHECK:

For the connector (on the RH front door wire harness side) between the airbag sensor assembly and the RH front door wire harness, measure the resistance between DMR+ and DMR-.

OK:

Resistance: Below 1 Ω

NG → **Repair or replace RH front door wire harness.**

OK

Repair or replace harness or connector between airbag sensor assembly and RH front door wire harness.

DI6PV-04

DTC	B1144/B1145/35	Door Side Airbag Sensor (LH) Malfunction (2-Door only)

CIRCUIT DESCRIPTION

The door side airbag sensor (LH) circuit consists of the airbag sensor assembly and door side airbag sensor (LH).
For details of the function of each component, see OPERATION on page RS-2 .
DTC B1144/B1145/35 is recorded when malfunction is detected in the door side airbag sensor (LH) circuit.

DTC No.	DTC Detecting Condition	Trouble Area
B1144/B1145/35	• Door side airbag sensor (LH) malfunction	• Door side airbag sensor (LH) • Airbag sensor assembly • Instrument panel wire harness • LH front door wire harness

WIRING DIAGRAM

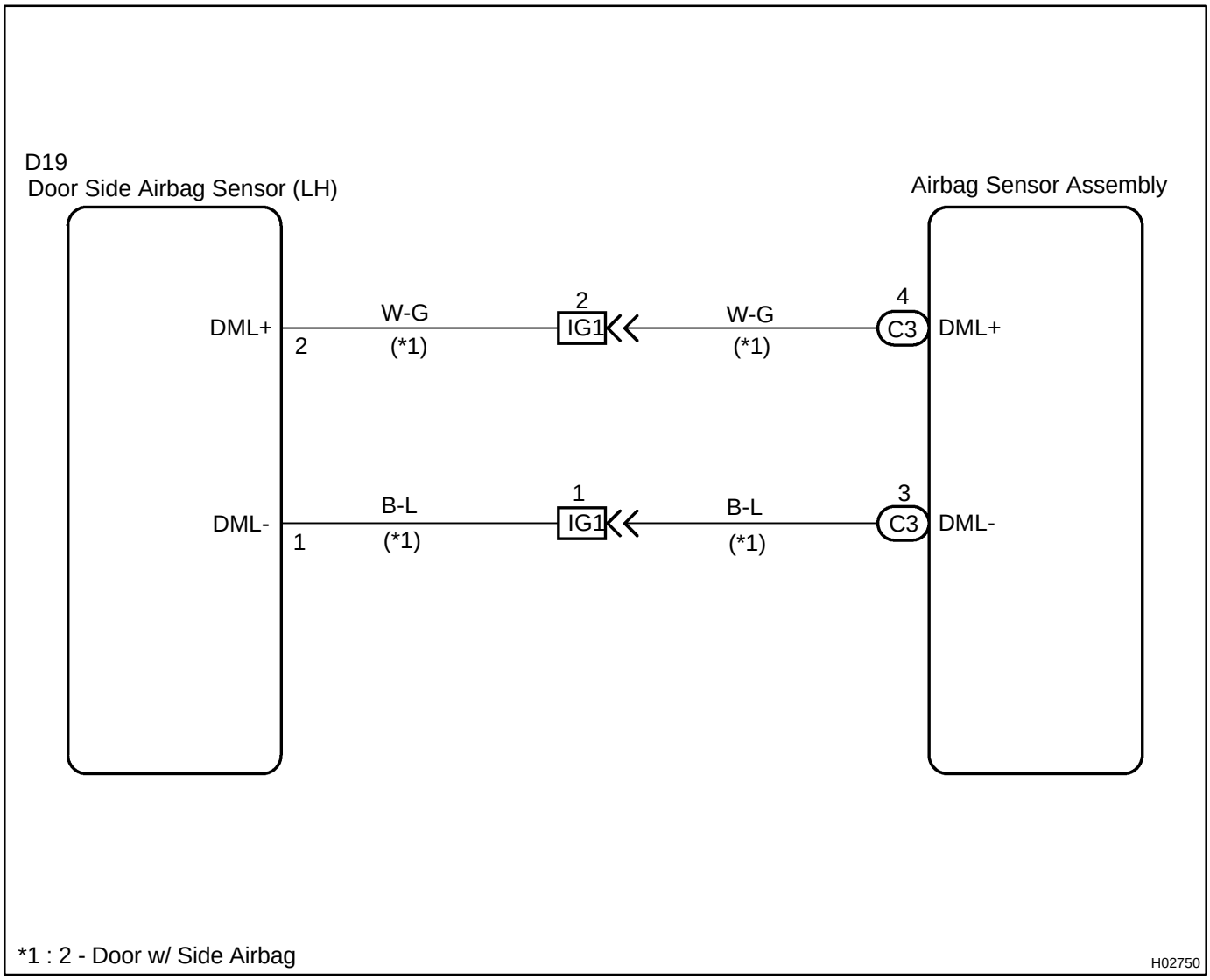

INSPECTION PROCEDURE

1	**Prepare for inspection (See step 1 on page DI-390).**

2	**Check wire harness (to B+).**

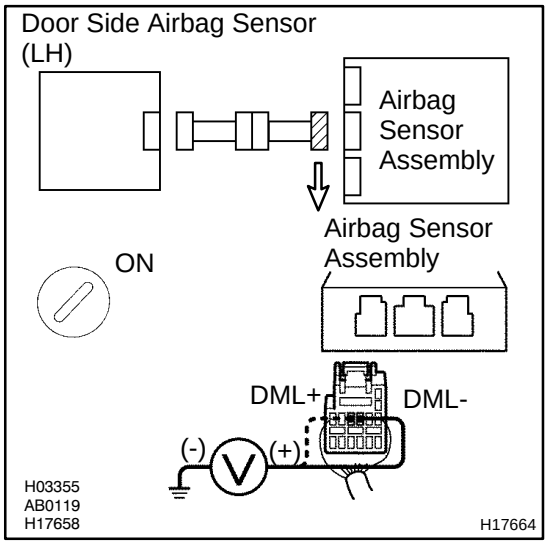

CHECK:

(a) Turn the ignition switch to ON.

(b) For the connector (on the airbag sensor assembly side) between the door side airbag sensor (LH) and the airbag sensor assembly, measure the voltage between body ground and each of DML+ and DML-.

OK:

Voltage: Below 1 V

NG → **Go to step 8.**

OK

3	**Check wire harness (to ground).**

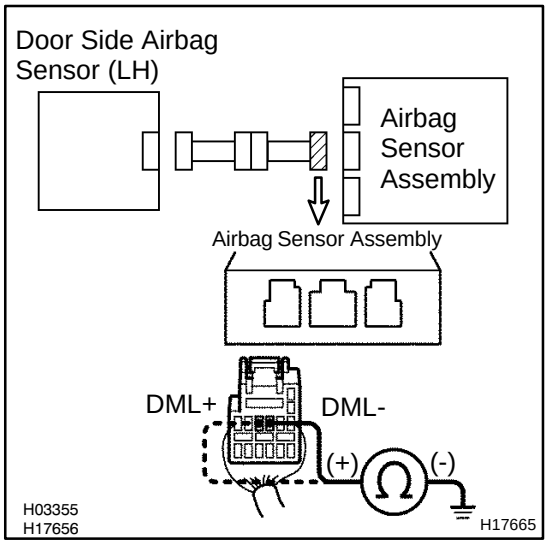

CHECK:

For the connector (on the airbag sensor assembly side) between the door side airbag sensor (LH) and the airbag sensor assembly, measure the resistance between body ground and each of DML+ and DML-.

OK:

Resistance: 1 MΩ or Higher

NG → **Go to step 9.**

OK

4	Check wire harness.

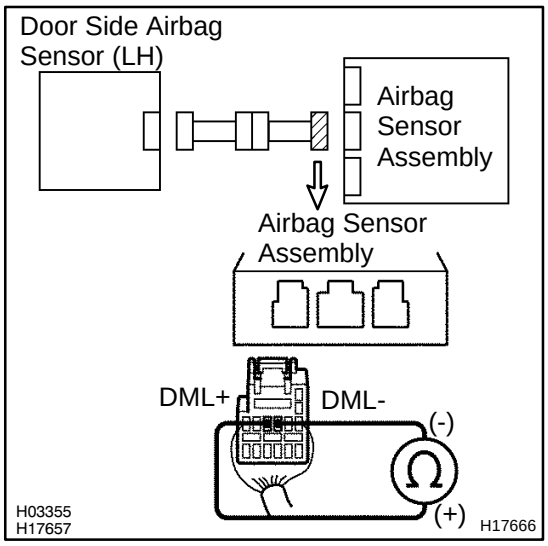

CHECK:

For the connector (on the airbag sensor assembly side) between the door side airbag sensor (LH) and the airbag sensor assembly, measure the resistance between DML+ and DML-.

OK:

Resistance: 1 MΩ or Higher

NG → **Go to step 10.**

OK

5	Check wire harness.

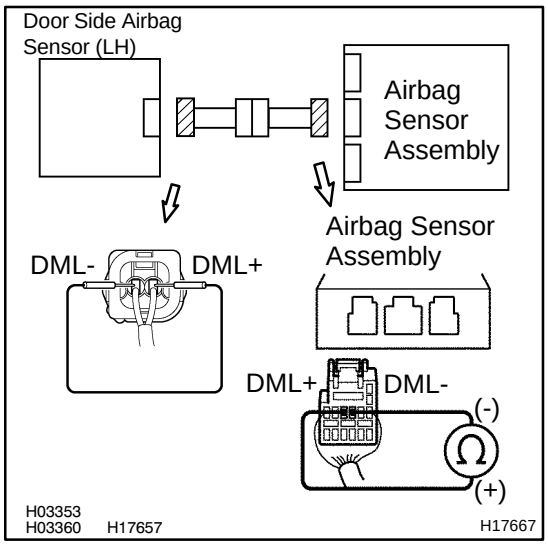

PREPARATION:

Using a service wire, connect DML+ and DML- of the connector (on the door side airbag sensor (LH) side) between the airbag sensor assembly and the door side airbag sensor (LH).

CHECK:

For the connector (on the airbag sensor assembly side) between the door side airbag sensor (LH) and the airbag sensor assembly, measure the resistance between DML+ and DML-.

OK:

Resistance: Below 1 Ω

NG → **Go to step 11.**

OK

6	**Check door side airbag sensor (LH).**

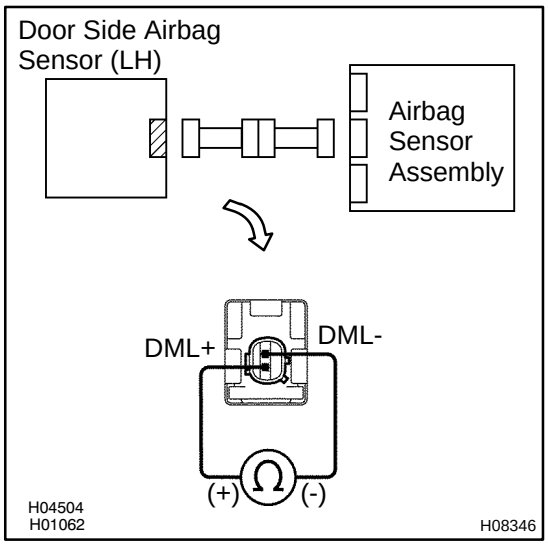

CHECK:

For the connector of the door side airbag sensor (LH), measure the resistance between DML+ and DML-.

OK:

Resistance: 300 - 1500 Ω

NG → **Replace door side airbag sensor (LH).**

OK

7	Check airbag sensor assembly.

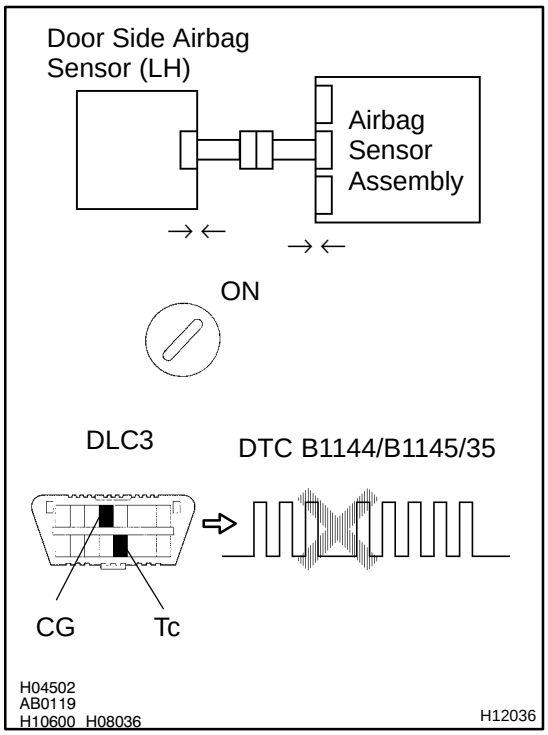

PREPARATION:

(a) Turn the ignition switch to LOCK.
(b) Disconnect negative (-) terminal cable from the battery, and wait at least for 90 seconds.
(c) Connect the door side airbag sensor (LH) connector and airbag sensor assembly connector.
(d) Connect negative (-) terminal cable to the battery, and wait at least for 2 seconds.

CHECK:

(a) Turn the ignition switch to ON, and wait at least for 20 seconds.
(b) Clear the DTC stored in memory (See page DI-239).
(c) Turn the ignition switch to LOCK, and wait at least for 20 seconds.
(d) Turn the ignition switch to ON, and wait at least for 20 seconds.
(e) Check the DTC (See page DI-239).

OK:

DTC 35 is not output.

HINT:
Codes other than code 35 may be output at this time, but they are not relevant to this check.

NG	Replace airbag sensor assembly.

OK

From the results of the above inspection, the malfunctioning part can now be considered normal. To make sure of this, use the simulation method to check.

8	**Check LH front door wire harness (to B+).**

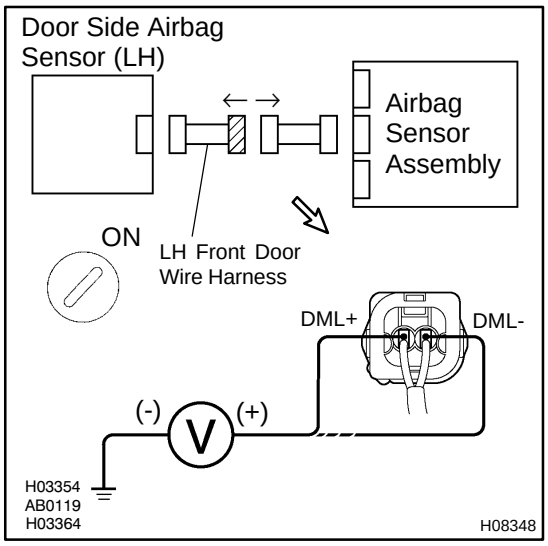

PREPARATION:

Disconnect the LH front door wire harness connector on the airbag sensor assembly side.

CHECK:

(a) Turn the ignition switch to ON.

(b) For the connector (on the LH front door wire harness side) between the airbag sensor assembly and the LH front door wire harness, measure the voltage between body ground and each of DML+ and DML-.

OK:

Voltage: Below 1 V

NG	**Repair or replace LH front door wire harness.**

OK

Repair or replace harness or connector between airbag sensor assembly and LH front door wire harness.

9	**Check LH front door wire harness (to ground).**

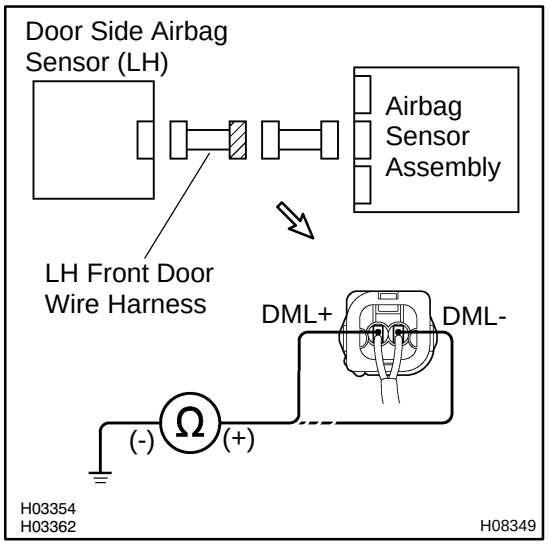

PREPARATION:

Disconnect the LH front door wire harness connector on the airbag sensor assembly side.

CHECK:

For the connector (on the LH front door wire harness side) between the airbag sensor assembly and the LH front door wire harness, measure the resistance between body ground and each of DML+ and DML-.

OK:

Resistance: 1 MΩ or Higher

NG	**Repair or replace LH front door wire harness.**

OK

Repair or replace harness or connector between airbag sensor assembly and LH front door wire harness.

10	Check LH front door wire harness.

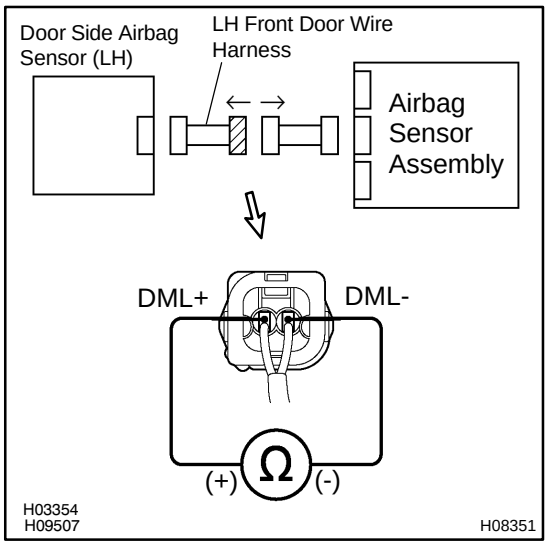

PREPARATION:

Disconnect the LH front door wire harness connector on the airbag sensor assembly side.

CHECK:

For the connector (on the LH front door wire harness side) between the airbag sensor assembly and the LH front door wire harness, measure the resistance between DML+ and DML-.

OK:

Resistance: 1 MΩ or Higher

NG → **Repair or replace LH front door wire harness.**

OK

Repair or replace harness or connector between airbag sensor assembly and LH front door wire harness.

11	**Check LH front door wire harness.**

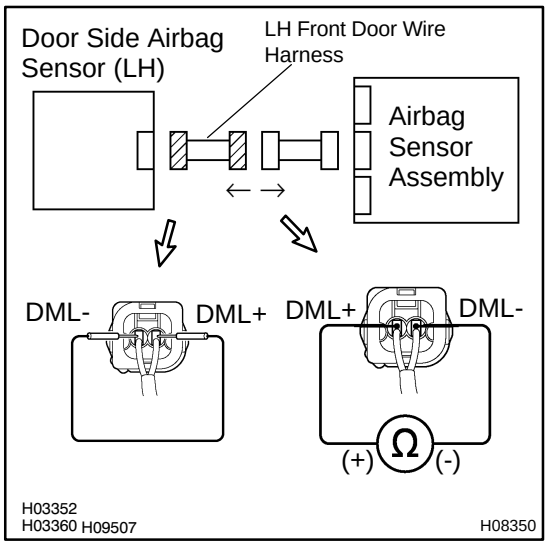

PREPARATION:

(a) Disconnect the LH front door wire harness connector on the airbag sensor assembly side.

(b) Using a service wire, connect DML+ and DML- of the connector (on the LH front door wire harness side) between the LH front door wire harness and the door side airbag sensor (LH).

CHECK:

For the connector (on the LH front door wire harness side) between the airbag sensor assembly and the LH front door wire harness, measure the resistance between DML+ and DML-.

OK:

Resistance: Below 1 Ω

NG → **Repair or replace LH front door wire harness.**

OK

Repair or replace harness or connector between airbag sensor assembly and LH front door wire harness.

DI4LA-26

DTC	B1156/B1157/15	Front Airbag Sensor (RH) Malfunction

CIRCUIT DESCRIPTION

The front airbag sensor (RH) circuit consists of the airbag sensor assembly and front airbag sensor (RH).
For details of the function of each component, see OPERATION on page RS-2 .
DTC B1156/B1157/15 is recorded when a malfunction is detected in the front airbag sensor (RH) circuit.

DTC No.	DTC Detecting Condition	Trouble Area
B1156/B1157/15	• Front airbag sensor (RH) malfunction	• Front airbag sensor (RH) • Wire harness • Engine room main wire harness • Airbag sensor assembly

WIRING DIAGRAM

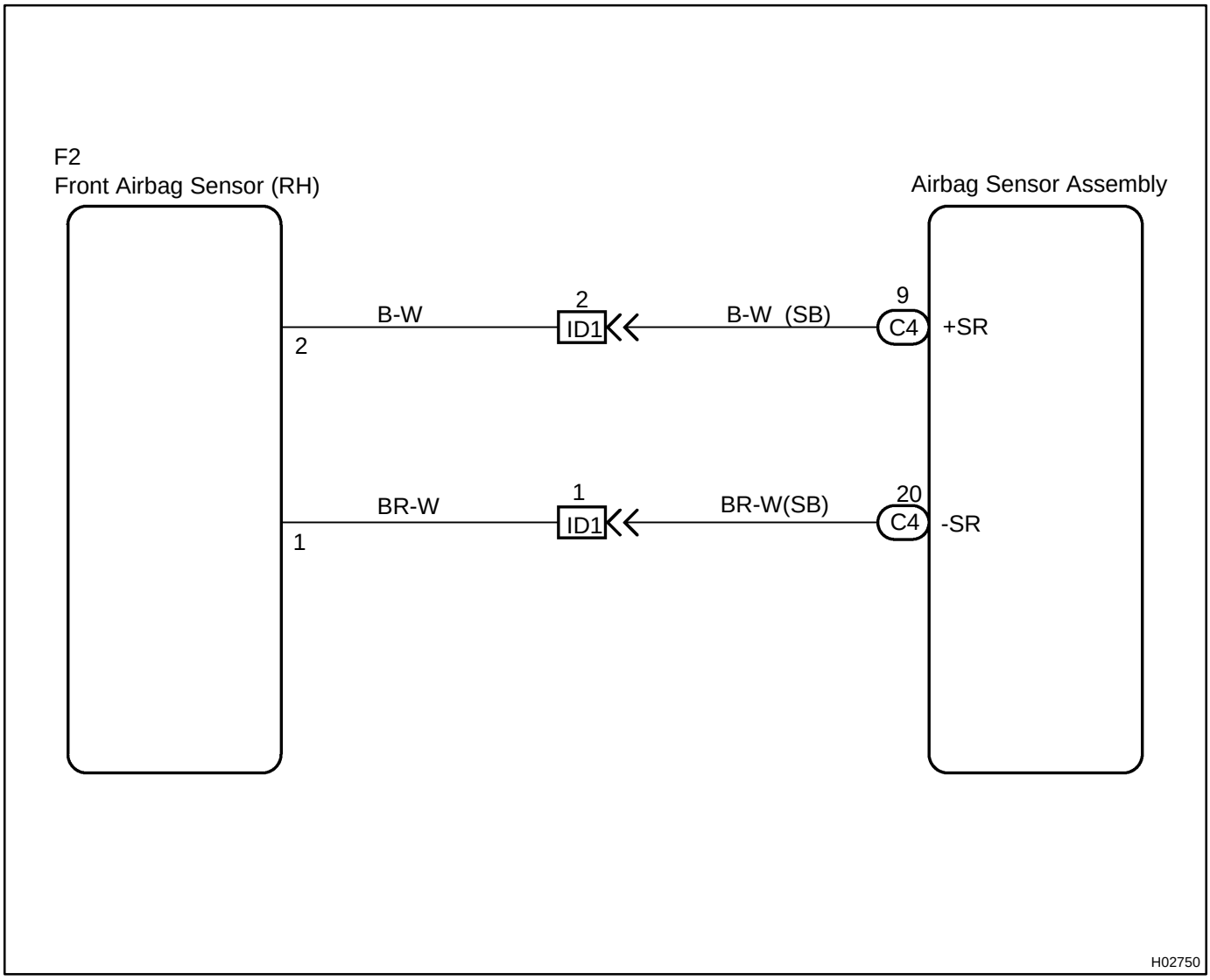

INSPECTION PROCEDURE

1	**Prepare for inspection (See step 1 on page DI-390).**

2	**Check wire harness (to B+).**

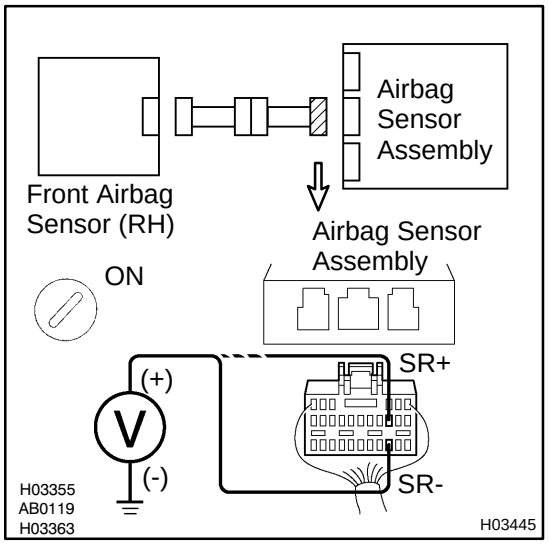

CHECK:

(a) Turn the ignition switch to ON.

(b) For the connector (on the airbag sensor assembly side) between the front airbag sensor (RH) and the airbag sensor assembly, measure the voltage between body ground and each of +SR and -SR.

OK:

Voltage: Below 1 V

NG → **Go to step 8.**

OK

3	**Check wire harness (to ground).**

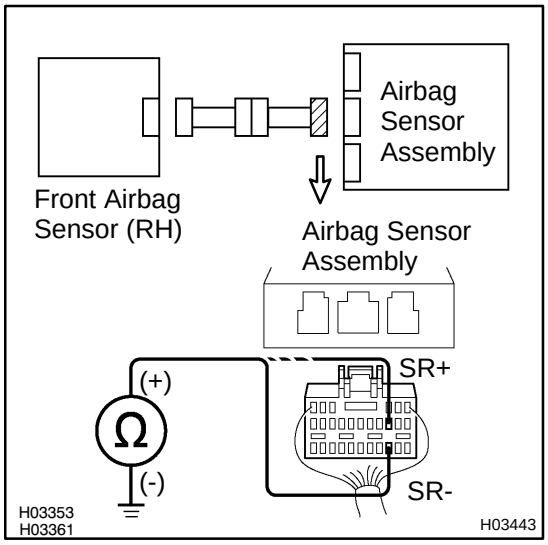

CHECK:

For the connector (on the airbag sensor assembly side) between the front airbag sensor (RH) and the airbag sensor assembly, measure the resistance between body ground and each of +SR and -SR.

OK:

Resistance: 1 MΩ or Higher

NG → **Go to step 9.**

OK

4	Check wire harness.

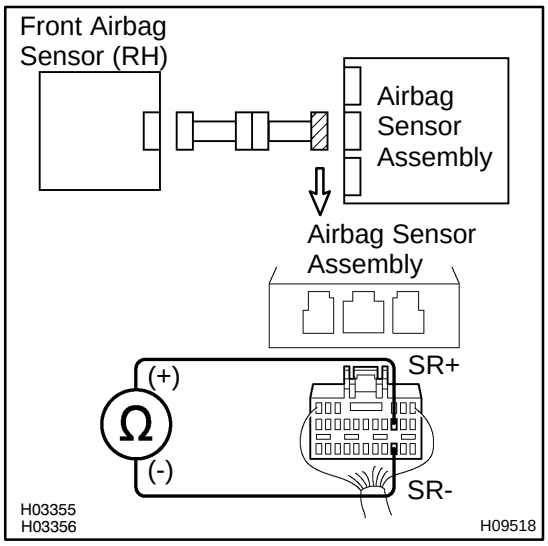

CHECK:

For the connector (on the airbag sensor assembly side) between the front airbag sensor (RH) and the airbag sensor assembly, measure the resistance between +SR and -SR.

OK:

Resistance: 1 MΩ or Higher

NG → **Go to step 10.**

OK

5	Check wire harness.

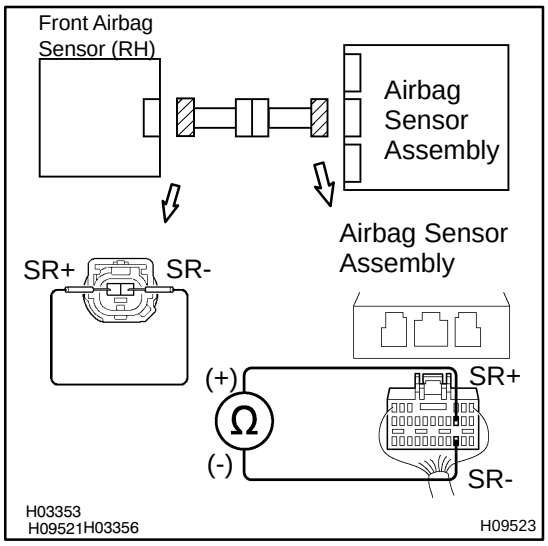

PREPARATION:

Using a service wire, connect +SR and -SR of the connector (on the front airbag sensor (RH) side) between the airbag sensor assembly and the front airbag sensor (RH).

CHECK:

For the connector (on the airbag sensor assembly side) between the front airbag sensor (RH) and the airbag sensor assembly, measure the resistance between +SR and -SR.

OK:

Resistance: Below 1 Ω

NG → **Go to step 11.**

OK

6	**Check front airbag sensor (RH).**

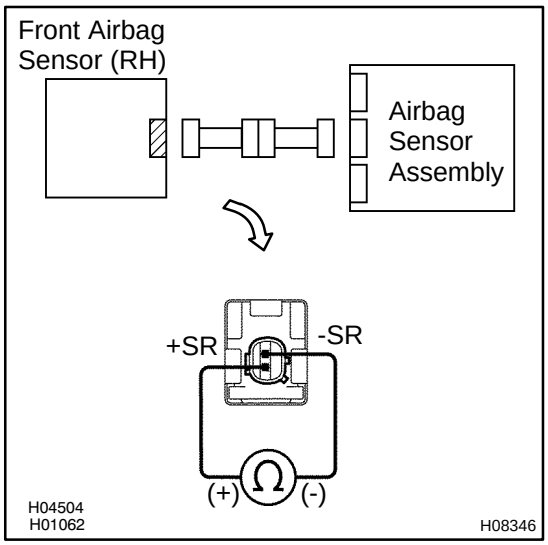

CHECK:

For the connector of the front airbag sensor (RH), measure the resistance between +SR and -SR.

OK:

Resistance: 300 - 1500 Ω

NG → **Replace front airbag sensor (RH).**

OK

7	Check airbag sensor assembly.

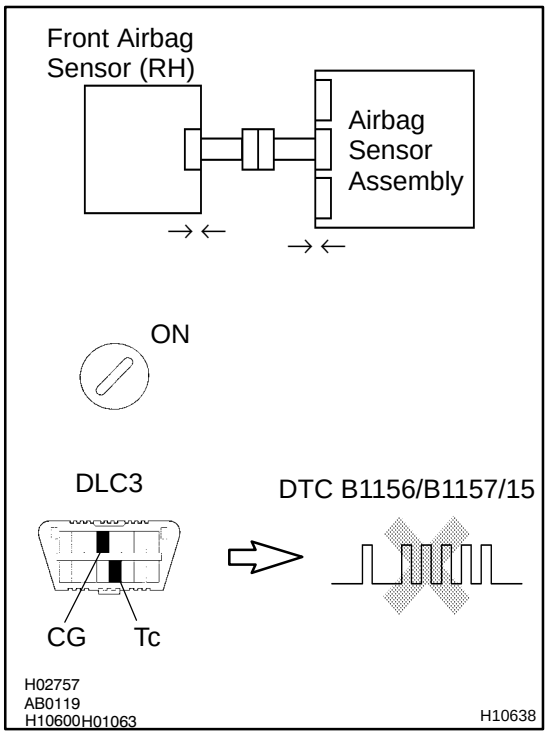

PREPARATION:

(a) Turn the ignition switch to LOCK.
(b) Disconnect negative (-) terminal cable from the battery, and wait at least for 90 seconds.
(c) Connect the front airbag sensor (RH) connector and airbag sensor assembly connector.
(d) Connect negative (-) terminal cable to the battery, and wait at least for 2 seconds.

CHECK:

(a) Turn the ignition switch to ON, and wait at least for 20 seconds.
(b) Clear DTC stored in memory (See step 5 on page DI-239).
(c) Turn the ignition switch to LOCK, and wait at least for 20 seconds.
(d) Turn the ignition switch to ON, and wait at least for 20 seconds.
(e) Check DTC (See page DI-239).

OK:

DTC B1156/B1157/15 is not output.

HINT:

Codes other than code B1156/B1157/15 may be output at this time, but they are not relevant to this check.

NG → **Replace airbag sensor assembly.**

OK

From the results of the above inspection, the malfunctioning part can now be considered normal. To make sure of this, use the simulation method to check.

8	**Check engine room main wire harness (to B+).**

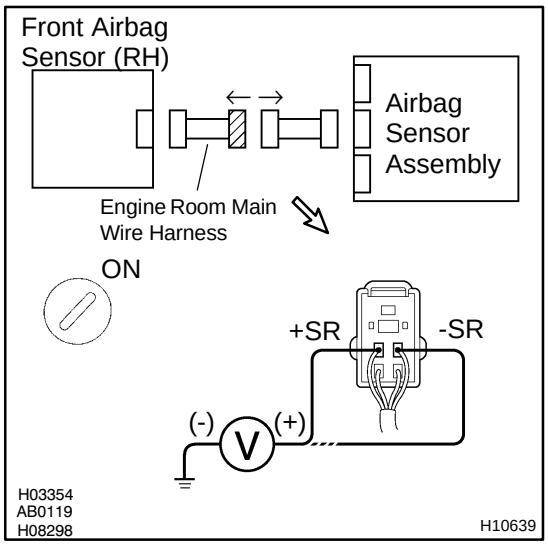

PREPARATION:

Disconnect the engine room main wire harness connector on the airbag sensor assembly side.

CHECK:

(a) Turn the ignition switch to ON.

(b) For the connector (on the RH front door wire harness side) between the airbag sensor assembly and the engine room main wire harness, measure the voltage between body ground and each of +SR and -SR.

OK:

Voltage: Below 1 V

NG	**Repair or replace engine room main wire harness.**

OK

Repair or replace harness or connector between airbag sensor assembly and engine room main wire harness.

9	**Check engine room main wire harness (to ground).**

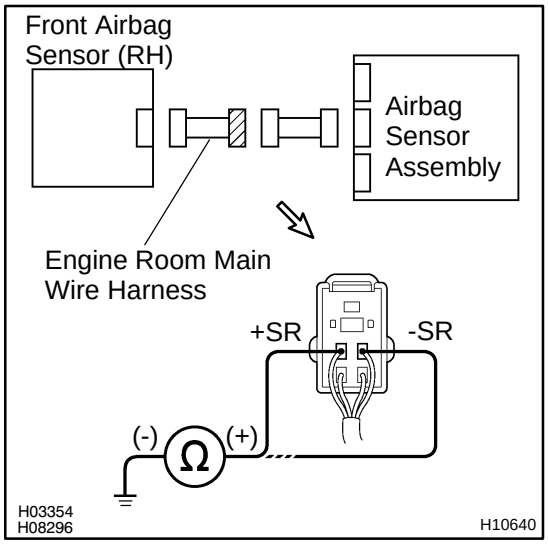

PREPARATION:

Disconnect the engine room main wire harness connector on the airbag sensor assembly side.

CHECK:

For the connector (on the engine room main wire harness side) between the airbag sensor assembly and the engine room main wire harness, measure the resistance between body ground and each of +SR and -SR.

OK:

Resistance: 1 MΩ or Higher

NG	**Repair or replace engine room main wire harness.**

OK

Repair or replace harness or connector between airbag sensor assembly and engine room main wire harness.

10	Check engine room main wire harness.

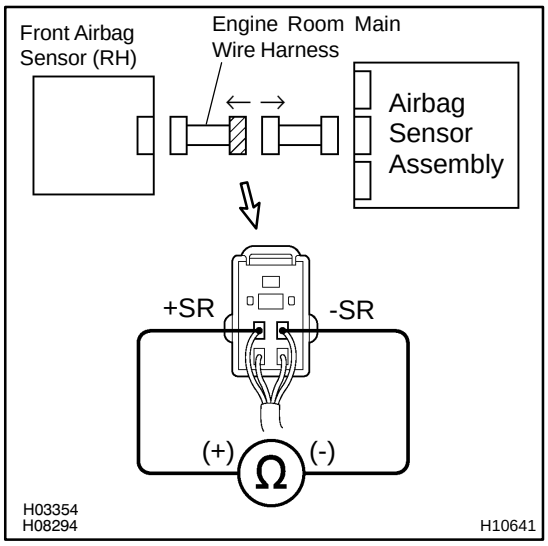

PREPARATION:

Disconnect the engine room main wire harness connector on the airbag sensor assembly side.

CHECK:

For the connector (on the engine room main wire harness side) between the airbag sensor assembly and the engine room main wire harness, measure the resistance between +SR and -SR.

OK:

Resistance: 1 MΩ or Higher

NG → **Repair or replace engine room main wire harness.**

OK

Repair or replace harness or connector between airbag sensor assembly and engine room main wire harness.

11	Check engine room main wire harness.

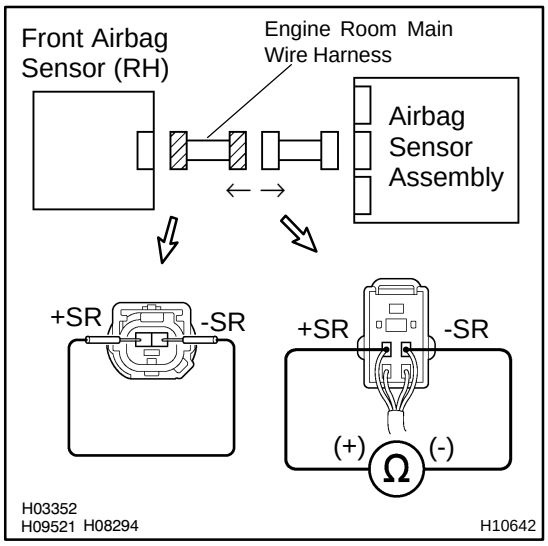

PREPARATION:

(a) Disconnect the engine room main wire harness connector on the airbag sensor assembly side.

(b) Using a service wire, connect +SR and -SR of the connector (on the engine room main wire harness side) between the engine room main wire harness and the front airbag sensor (RH).

CHECK:

For the connector (on the engine room main wire harness side) between the airbag sensor assembly and the engine room main wire harness, measure the resistance between +SR and -SR.

OK:

Resistance: Below 1 Ω

NG → **Repair or replace engine room main wire harness.**

OK

Repair or replace harness or connector between airbag sensor assembly and engine room main wire harness.

DI4LA-27

DTC	B1158/B1159/16	Front Airbag Sensor (LH) Malfunction

CIRCUIT DESCRIPTION

The front airbag sensor (LH) circuit consists of the airbag sensor assembly and front airbag sensor (LH).
For details of the function of each component, see OPERATION on page RS-2 .
DTC B1158/B1159/16 is recorded when malfunction is detected in the front airbag sensor (LH) circuit.

DTC No.	DTC Detecting Condition	Trouble Area
B1158/B1159/16	• Front airbag sensor (LH) malfunction	• Front airbag sensor (LH) • Wire harness • Engine room main wire harness • Airbag sensor assembly

WIRING DIAGRAM

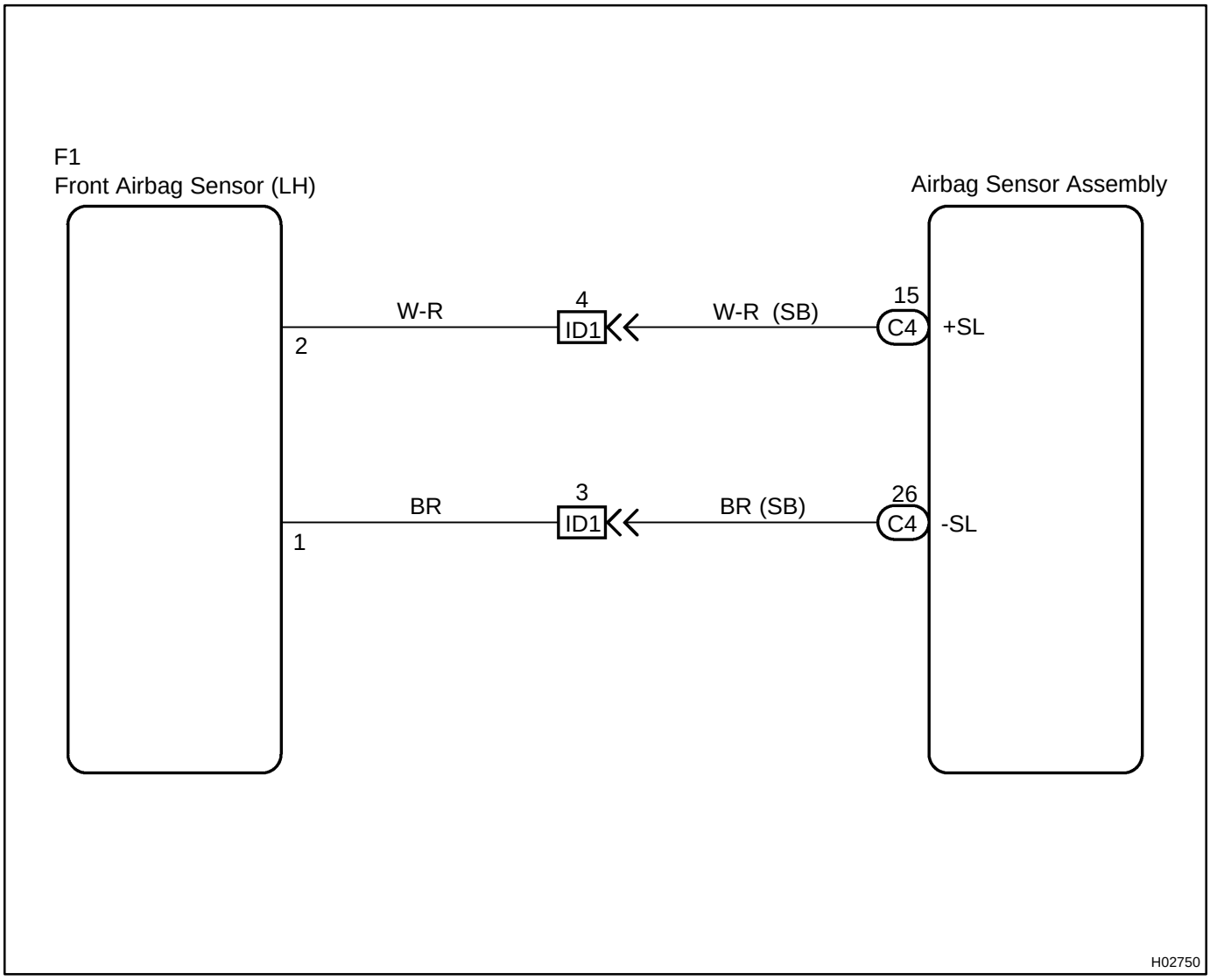

INSPECTION PROCEDURE

1	**Prepare for inspection (See step 1 on page DI-390).**

2	**Check wire harness (to B+).**

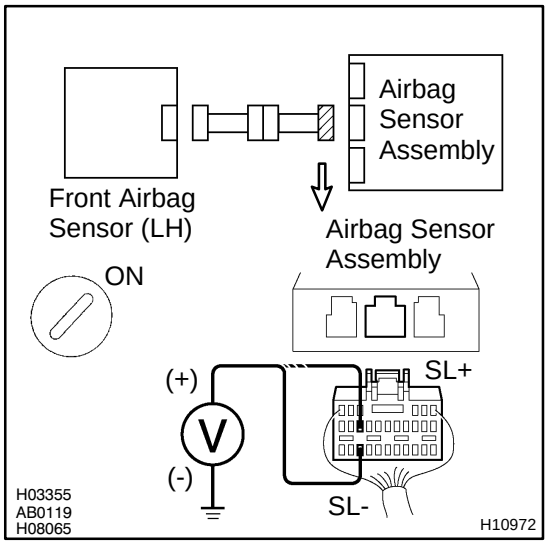

CHECK:

(a) Turn the ignition switch to ON.

(b) For the connector (on the airbag sensor assembly side) between the front airbag sensor (LH) and the airbag sensor assembly, measure the voltage between body ground and each of +SL and -SL.

OK:

Voltage: Below 1 V

NG → **Go to step 8.**

OK

3	**Check wire harness (to ground).**

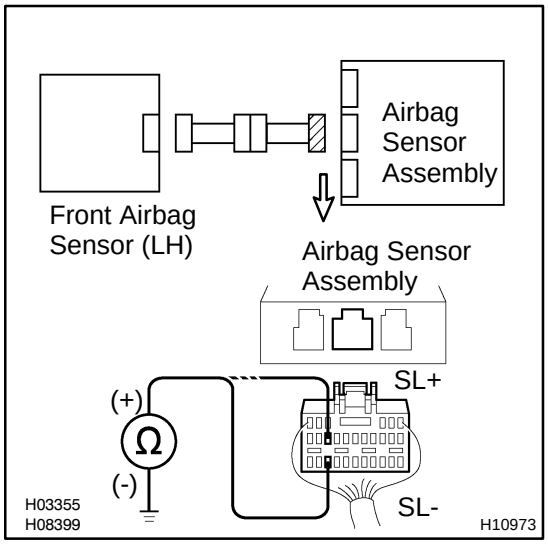

CHECK:

For the connector (on the airbag sensor assembly side) between the front airbag sensor (LH) and the airbag sensor assembly, measure the resistance between body ground and each of +SL and -SL.

OK:

Resistance: 1 MΩ or Higher

NG → **Go to step 9.**

OK

4	Check wire harness.

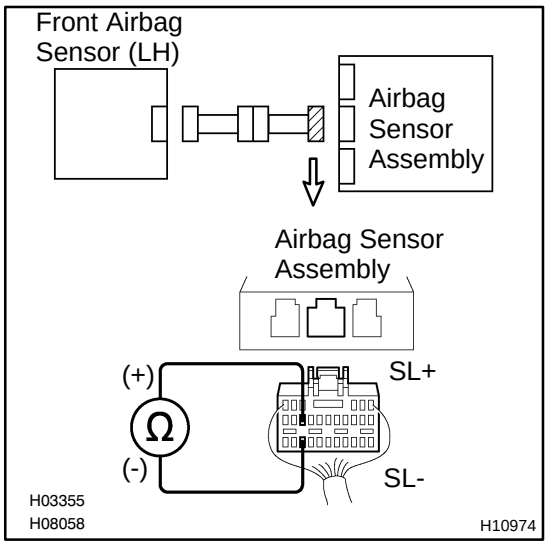

CHECK:

For the connector (on the airbag sensor assembly side) between the front airbag sensor (LH) and the airbag sensor assembly, measure the resistance between +SL and -SL.

OK:

Resistance: 1 MΩ or Higher

NG → **Go to step 10.**

OK

5	Check wire harness.

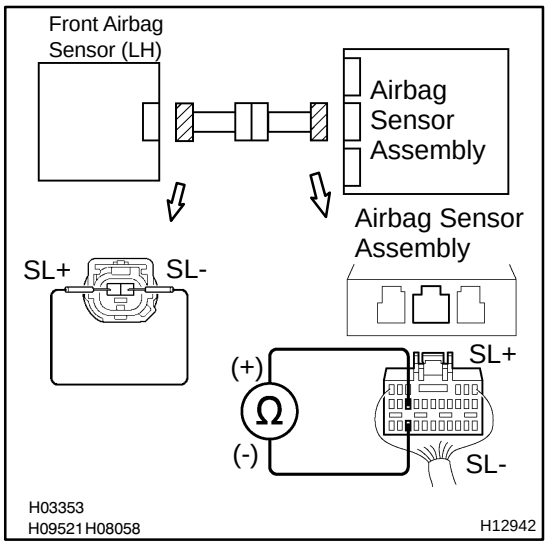

PREPARATION:

Using a service wire, connect +SL and -SL of the connector (on the front airbag sensor (LH) side) between the airbag sensor assembly and the front airbag sensor (LH).

CHECK:

For the connector (on the airbag sensor assembly side) between the front airbag sensor (LH) and the airbag sensor assembly, measure the resistance between +SL and -SL.

OK:

Resistance: Below 1 Ω

NG → **Go to step 11.**

OK

6	**Check front airbag sensor (LH).**

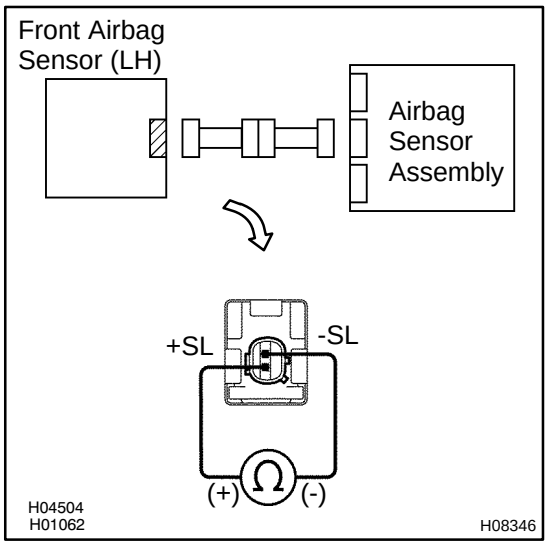

CHECK:

For the connector of the front airbag sensor (LH), measure the resistance between +SL and -SL.

OK:

Resistance: 300 - 1500 Ω

NG → **Replace front airbag sensor (LH).**

OK

7	Check airbag sensor assembly.

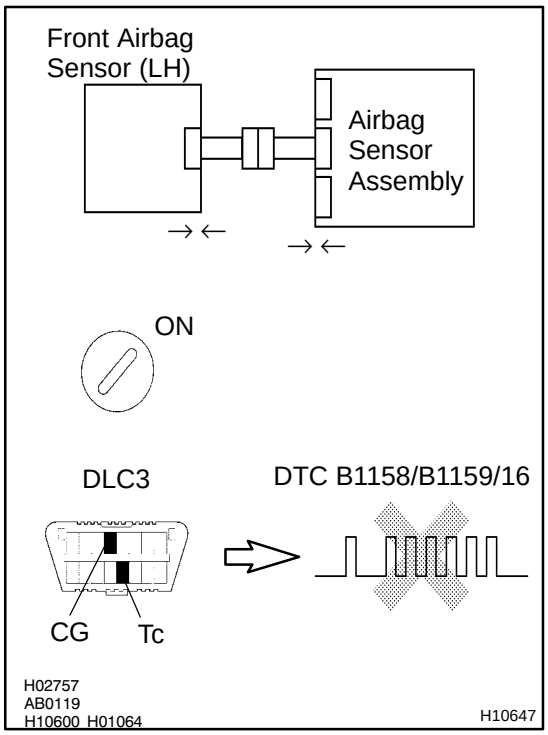

PREPARATION:

(a) Turn the ignition switch to LOCK.
(b) Disconnect negative (-) terminal cable from the battery, and wait at least for 90 seconds.
(c) Connect the front airbag sensor (LH) connector and airbag sensor assembly connector.
(d) Connect negative (-) terminal cable to the battery, and wait at least for 2 seconds.

CHECK:

(a) Turn the ignition switch to ON, and wait at least for 20 seconds.
(b) Clear DTC stored in memory (See step 5 on page DI-239).
(c) Turn the ignition switch to LOCK, and wait at least for 20 seconds.
(d) Turn the ignition switch to ON, and wait at least for 20 seconds.
(e) Check DTC (See page DI-239).

OK:

DTC B1158/B1159/16 is not output.

HINT:

Codes other than code B1156/B1157/15 may be output at this time, but they are not relevant to this check.

NG → **Replace airbag sensor assembly.**

OK

From the results of the above inspection, the malfunctioning part can now be considered normal. To make sure of this, use the simulation method to check.

8	**Check engine room main wire harness (to B+).**

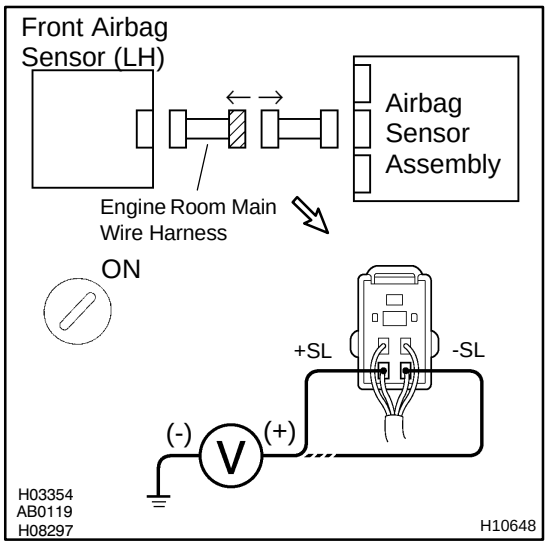

PREPARATION:

Disconnect the engine room main wire harness connector on the airbag sensor assembly side.

CHECK:

(a) Turn the ignition switch to ON.

(b) For the connector (on the engine room main wire harness side) between the airbag sensor assembly and the engine room main wire harness, measure the voltage between body ground and each of +SL and -SL.

OK:

Voltage: Below 1 V

NG	**Repair or replace engine room main wire harness.**

OK

Repair or replace harness or connector between airbag sensor assembly and engine room main wire harness.

9	**Check engine room main wire harness (to ground).**

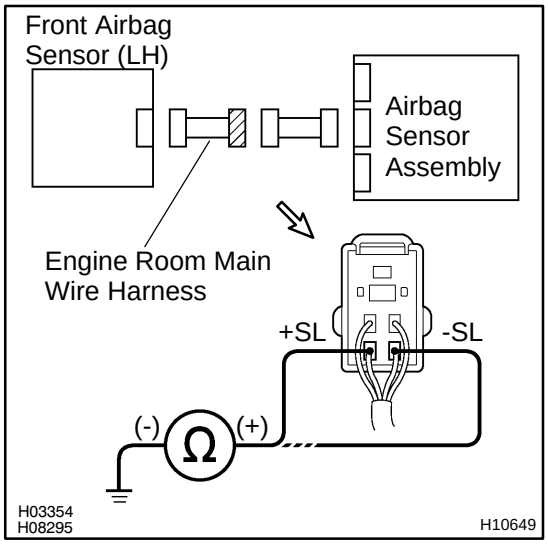

PREPARATION:

Disconnect the engine room main wire harness connector on the airbag sensor assembly side.

CHECK:

For the connector (on the engine room main wire harness side) between the airbag sensor assembly and the engine room main wire harness, measure the resistance between body ground and each of +SL and -SL.

OK:

Resistance: 1 MΩ or Higher

NG	**Repair or replace engine room main wire harness.**

OK

Repair or replace harness or connector between airbag sensor assembly and engine room main wire harness.

10	Check engine room main wire harness.

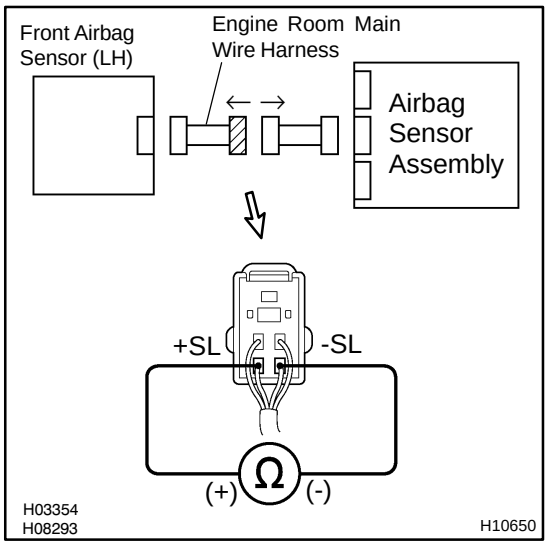

PREPARATION:

Disconnect the engine room main wire harness connector on the airbag sensor assembly side.

CHECK:

For the connector (on the engine room main wire harness side) between the airbag sensor assembly and the engine room main wire harness, measure the resistance between +SL and -SL.

OK:

Resistance: 1 MΩ or Higher

NG → **Repair or replace engine room main wire harness.**

OK

Repair or replace harness or connector between airbag sensor assembly and engine room main wire harness.

11	**Check engine room main wire harness.**

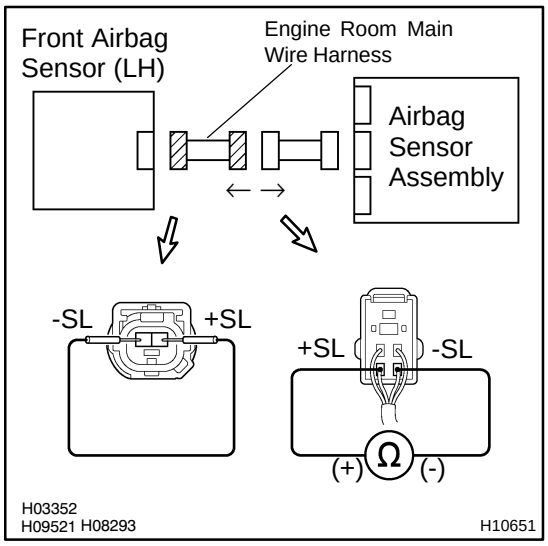

PREPARATION:

(a) Disconnect the engine room main wire harness connector on the airbag sensor assembly side.

(b) Using a service wire, connect +SL and -SL of the connector (on the engine room main wire harness side) between the engine room main wire harness and the front airbag sensor (LH).

CHECK:

For the connector (on the engine room main wire harness side) between the airbag sensor assembly and the engine room main wire harness, measure the resistance between +SL and -SL.

OK:

Resistance: Below 1 Ω

NG → **Repair or replace engine room main wire harness.**

OK

Repair or replace harness or connector between airbag sensor assembly and engine room main wire harness.

DI1BM-34

DTC	B1100/31	Airbag Sensor Assembly Malfunction

CIRCUIT DESCRIPTION

The airbag sensor assembly consists of a airbag sensor, safing sensor, drive circuit, diagnosis circuit and ignition control, etc.
It receives signals from the airbag sensor, judges whether or not the SRS must be activated, and detects diagnosis system malfunction.
DTC B1100/31 is recorded when occurrence of a malfunction in the airbag sensor assembly is detected.

DTC No.	DTC Detecting Condition	Trouble Area
B1100/31	• Airbag sensor assembly malfunction	• Airbag sensor assembly

INSPECTION PROCEDURE

HINT:
When a malfunction code other than code B1100/31 is displayed at the same time, first repair the malfunction indicated by the malfunction code other than code B1100/31.

1	**Prepare for inspection. (See step 1 on page DI-390)**

2	**Check voltage at IG1 and IG2 of airbag sensor assembly.**

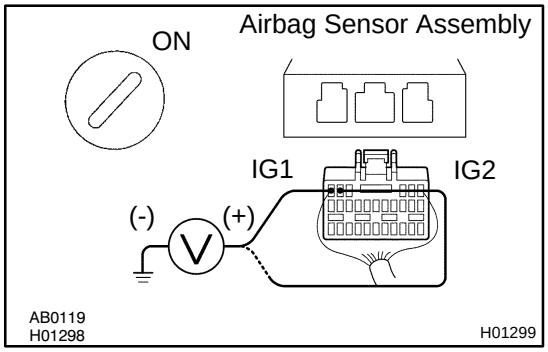

CHECK:

(a) Turn the ignition switch to ON.
(b) Measure the voltage between body ground and each of terminals IG1 and IG2 of the airbag sensor assembly connector.

OK:

Voltage: 10 - 14 V

NG → **Check that an abnormality occurs on the battery and charging system.**

OK

3	Is DTC B1100/31 output again?

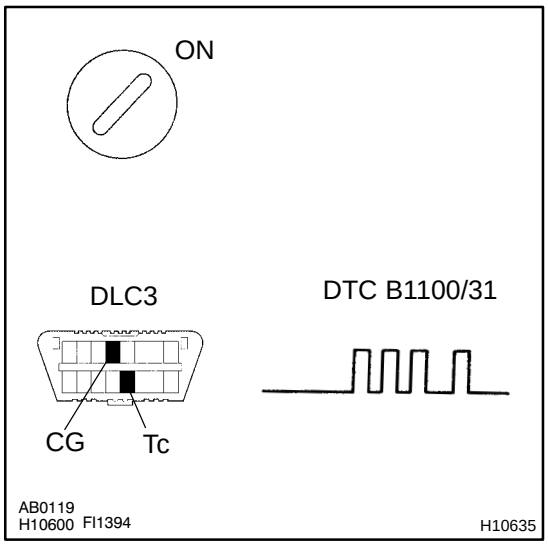

PREPARATION:

Clear DTC. (See step 5 on page DI-239)

CHECK:

(a) Turn the ignition switch to LOCK, and wait at least for 20 seconds.

(b) Turn the ignition switch to ON, and wait at least for 20 seconds.

(c) Repeat operation in step (a) and (b) at least 5 times.

(d) Check DTC. (See page DI-239)

HINT:

Codes other than code B1100/31 may be output at this time, but they are not relevant to this check.

NO → **Using simulation method, reproduce malfunction symptoms. (See page IN-19)**

YES

Replace airbag sensor assembly.

DI7IA-01

DTC	B1135/24	Half Connection in Airbag Sensor Assembly Connector

CIRCUIT DESCRIPTION

The airbag sensor assembly detects partial connection of connector.
For details of the function of each component, see OPERATION on page RS-2 .
DTC B1135/24 is recorded when the airbag sensor assembly detects an open in the electrical connection check mechanism of the airbag sensor connector or in the airbag sensor circuit.

DTC No.	DTC Detecting Condition	Trouble Area
B1135/24	• Malfunction of electrical connection check mechanism of airbag sensor assembly connector • Airbag sensor assembly malfunction	• Electrical connection check mechanism • Airbag sensor assembly

INSPECTION PROCEDURE

1	**Are connector of center airbag sensor assembly properly connected?**

NG → **Connect connectors.**

OK

2	**Prepare for inspection (See step 1 on page DI-390).**

3	**Check airbag sensor assembly.**

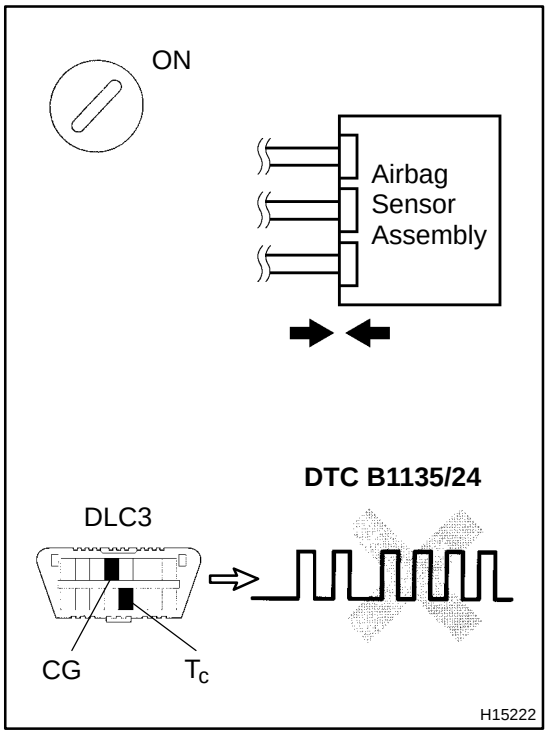

PREPARATION:

(a) Connect the connectors to the airbag sensor assembly.
(b) Connect negative (-) terminal cable to the battery, and wait at least for 2 seconds.

CHECK:

(a) Turn the ignition switch to LOCK, and wait at least for 20 seconds.
(b) Turn the ignition switch to ON, and wait at least for 20 seconds.
(c) Clear the DTC stored in memory (See page DI-239).
(d) Turn the ignition switch to LOCK, and wait at least for 20 seconds.
(e) Turn the ignition switch to ON, and wait at least for 20 seconds.
(f) Check the DTC (See page DI-239).

OK:

DTC B1135/24 is not output.

HINT:

Codes other than code B1135/24 may be output at this time, but they are not relevant to this check.

NG → **Go to the next step.**

OK

From the results of the inspection, the malfunctioning part can now be considered normal. To make sure of this, use the simulation method to check.

4	**Check disconnection detection pin in the center airbag sensor assembly connector.**

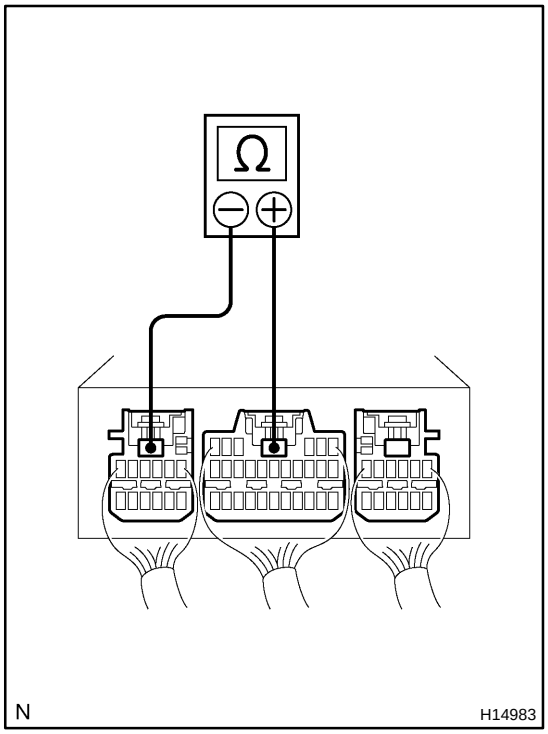

CHECK:

With 3 connectors connected to the sensor assembly, place tester leads onto any 2 of 3 disconnection detection pins and check for continuity.

OK:

Continuity

NG → **Go to the next step.**

OK

From the results of the inspection, the malfunctioning part can now be considered normal. To make sure of this, use the simulation method to check.

5	**Perform a visual check of the disconnection detection pin.**

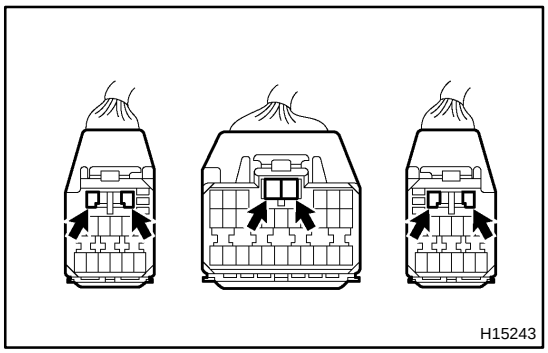

OK:

No deformation is identified.

HINT:

Compare it with the other 2 connector pins.

NG → **Repair or replace airbag sensor assembly connector.**

OK

Replace airbag sensor assembly.

DI6ZW-03

DTC	B1140/32	Side Airbag Sensor Assembly (RH) Malfunction

CIRCUIT DESCRIPTION

The side airbag sensor assembly (RH) consists of the safing sensor, diagnosis circuit and lateral deceleration sensor, etc.
It receives signals from the lateral deceleration sensor, judges whether or not the SRS must be activated, and diagnosis system malfunction.
DTC B1140/32 is recorded when occurrence of a malfunction in the side airbag sensor assembly (RH) is detected.

DTC No.	DTC Detecting Condition	Trouble Area
B1140/32	• Side airbag sensor assembly (RH) malfunction	• Side airbag sensor assembly (RH) • Wire harness • Airbag sensor assembly

WIRING DIAGRAM

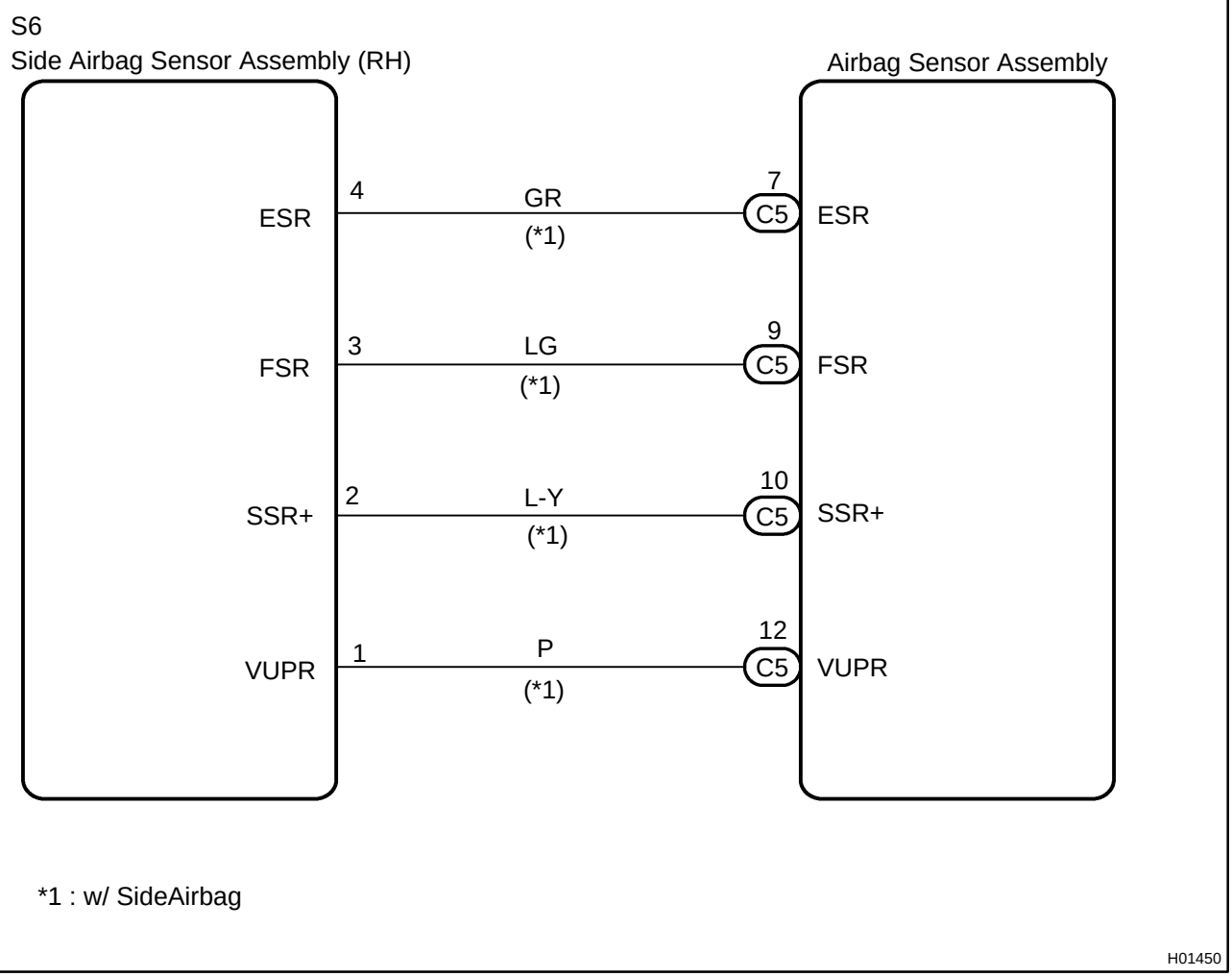

INSPECTION PROCEDURE

1	**Is DTC B1140/32 output?**

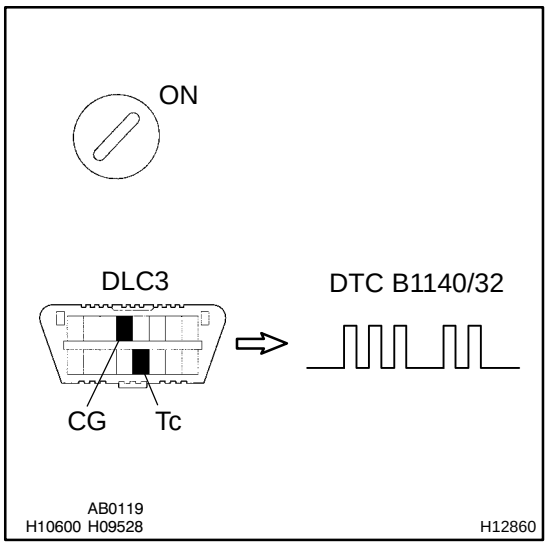

CHECK:

(a) Turn ignition switch to ON and wait at least for 20 seconds.

(b) Clear DTC stored in memory (See step 5 on page DI-239).

(c) Turn ignition switch to LOCK, and wait at least for 20 seconds.

(d) Turn ignition switch to ON and wait at least for 20 seconds.

(e) Check DTC (See page DI-239).

HINT:

Codes other than code B1140/32 may be output at this time, but they are not relevant to this check.

YES → **The malfunctioning part can now be considered normal. To make sure of this, use the simulation method to check.**

NO

2	**Is connector of side airbag sensor assembly (RH) properly connected?**

3	**Prepare for inspection (See step 1 on DI-390).**

4	Check wire harness.

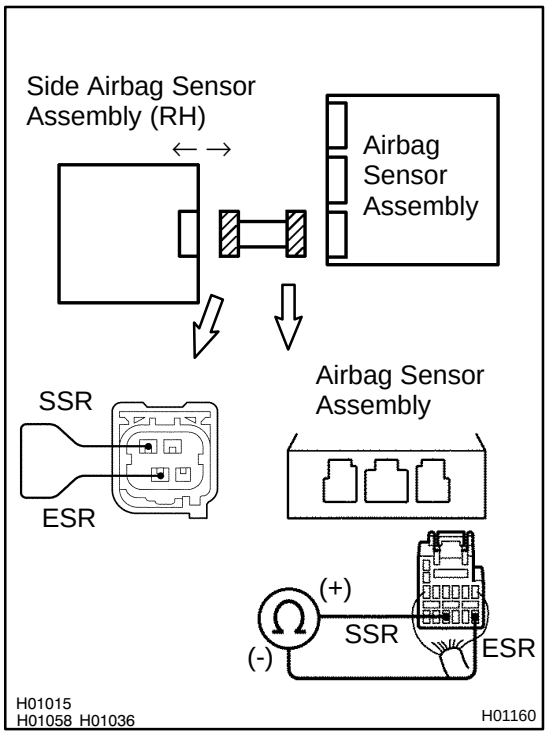

PREPARATION:

(a) Disconnect the side airbag sensor assembly (RH) connector.

(b) Using a service wire, connect SSR and ESR of the connector (on the side airbag sensor assembly side) between the side airbag sensor assembly (RH) and airbag sensor assembly.

CHECK:

For the connector (on the airbag sensor assembly side) between the side airbag sensor assembly (RH) and the airbag sensor assembly, measure the resistance between SSR and ESR.

OK:

Resistance: Below 1 Ω

NG → **Repair or replace harness or connector between side airbag sensor assembly (RH) and airbag sensor assembly.**

OK

5	**Check wire harness.**

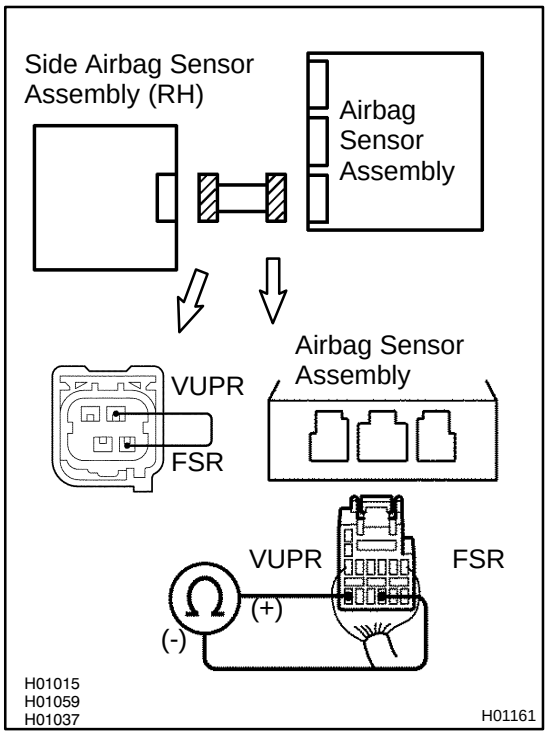

PREPARATION:

Using a service wire, connect VUPR and FSR of the connector (on the side airbag sensor assembly side) between the side airbag sensor assembly (RH) and airbag sensor assembly.

CHECK:

For the connector (on the airbag sensor assembly side) between the side airbag sensor assembly (RH) and the airbag sensor assembly, measure the resistance between VUPR and FSR.

OK:

Resistance: Below 1 Ω

NG → **Repair or replace harness or connector between side airbag sensor assembly (RH) and airbag sensor assembly.**

OK

6	Check wire harness (to ground).

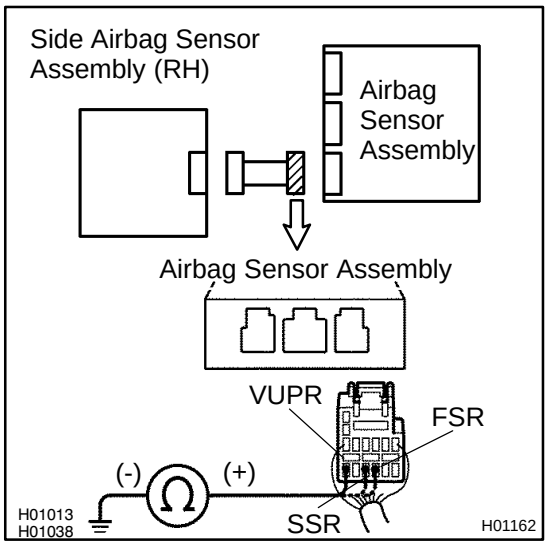

CHECK:

For the connector (on the airbag sensor assembly side) between the side airbag sensor assembly (RH) and the airbag sensor assembly, measure the resistance between body ground and each of SSR, VUPR and FSR.

OK:

Resistance: Below 1 Ω

NG → **Repair or replace harness or connector between side airbag sensor assembly (RH) and airbag sensor assembly.**

OK

7	Check wire harness (to B+).

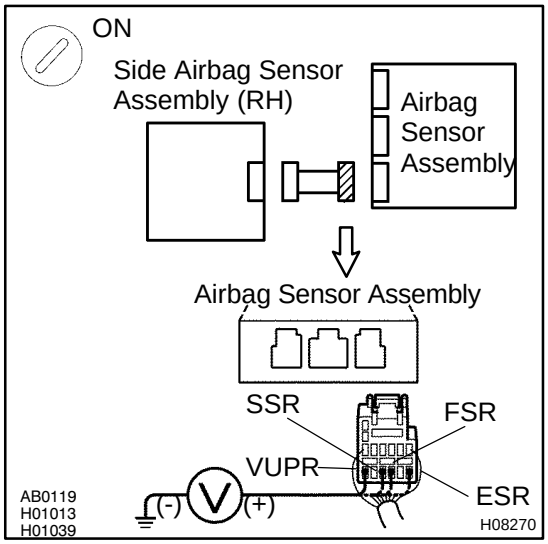

CHECK:

(a) Turn ignition switch to ON.

(b) For the connector (on the airbag sensor assembly side) between the side airbag sensor assembly (RH) and the airbag sensor assembly, measure the voltage between the body ground and each of SSR, VUPR, ESR and FSR.

OK:

Voltage: 0 V

NG → **Repair or replace harness or connector between side airbag sensor assembly (RH) and airbag sensor assembly.**

OK

8	Is DTC B1140/32 output again?

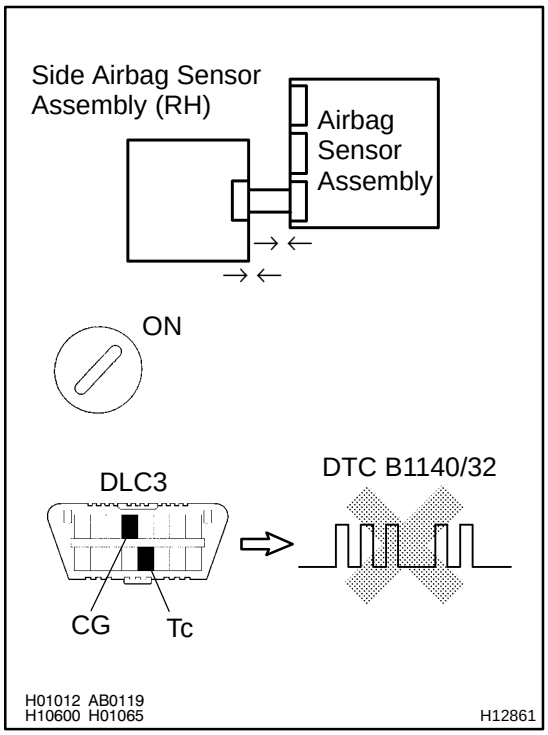

PREPARATION:

(a) Connect the connector to the side airbag sensor assembly (RH).
(b) Connect the connector to the airbag sensor assembly.
(c) Connect negative (-) terminal cable to the battery, and wait at least for 2 seconds.

CHECK:

(a) Turn ignition switch to ON and wait at least for 20 seconds.
(b) Clear DTC stored in memory (See step 5 on page DI-239).
(c) Turn ignition switch to LOCK, and wait at least for 20 seconds.
(d) Turn ignition switch to ON and wait at least for 20 seconds.
(e) Check DTC (See page DI-239).

OK:

DTC B1140/32 is not output.

HINT:

Codes other than code B1140/32 may be output at this time, but they are not relevant to this check.

NG	Go to step 9.

OK

From the results of the above inspection, the malfunctioning part can now be considered normal. To make sure of this, use the simulation method to check.

9	Check airbag sensor assembly.

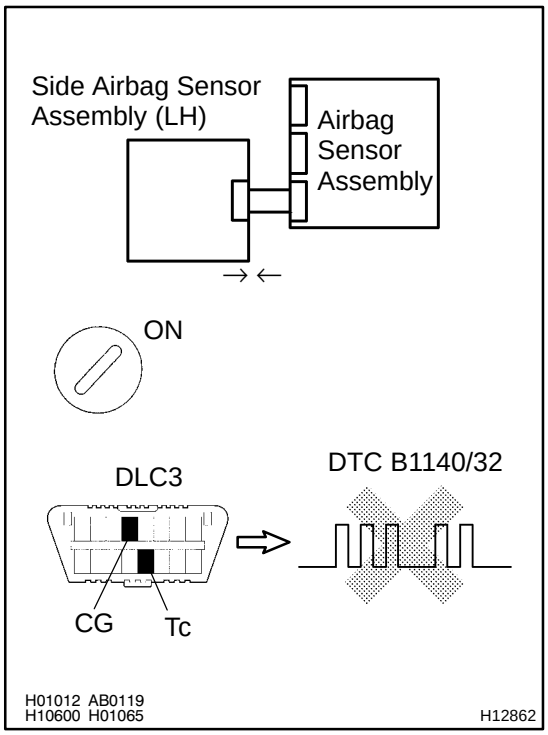

PREPARATION:

(a) Turn ignition switch to LOCK.
(b) Disconnect negative (-) terminal cable from the battery, and wait at least for 90 seconds.
(c) Disconnect the side airbag sensor (RH) from the connector and connect the side airbag sensor (LH) to the connector.
(d) Connect negative (-) terminal cable to the battery, and wait at least for 2 seconds.

CHECK:

(a) Turn ignition switch to ON and wait at least for 20 seconds.
(b) Clear DTC stored in memory (See step 5 on page DI-239).
(c) Turn ignition switch to LOCK, and wait at least for 20 seconds.
(d) Turn ignition switch to ON and wait at least for 20 seconds.
(e) Check DTC (See page DI-239).

OK:

DTC B1140/32 is not output.

HINT:
Codes other than code B1140/32 may be output at this time, but they are not relevant to this check.

NG	Replace airbag sensor assembly.

OK

10	Check side airbag sensor assembly (RH).

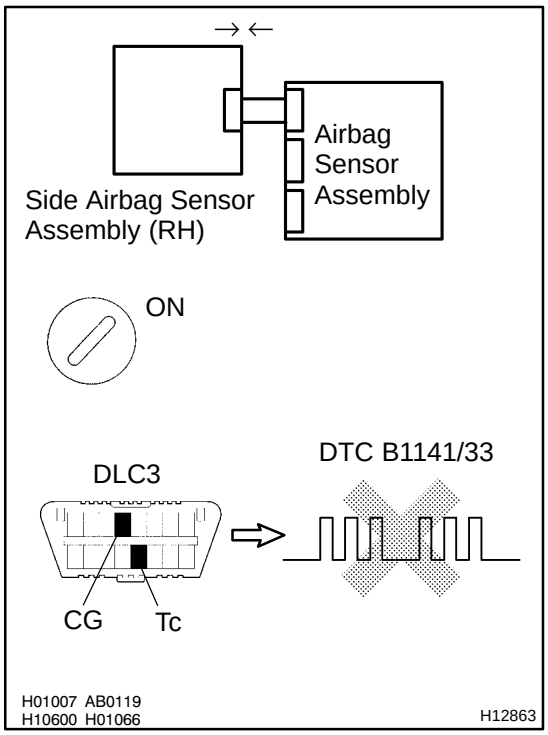

PREPARATION:

(a) Turn ignition switch to LOCK.
(b) Disconnect negative (-) terminal cable from the battery, and wait at least for 90 seconds.
(c) Connect the side airbag sensor (RH) to the connector that the side airbag sensor (LH) was connected to.
(d) Connect negative (-) terminal cable to the battery, and wait at least for 2 seconds.

CHECK:

(a) Turn ignition switch to ON and wait at least for 20 seconds.
(b) Clear DTC stored in memory (See page DI-239).
(c) Turn ignition switch to LOCK, and wait at least for 20 seconds.
(d) Turn ignition switch to ON and wait at least for 20 seconds.
(e) Check DTC (See page DI-239).

OK:

DTC B1141/33 is not output.

HINT:
Codes other than code B1141/33 may be output at this time, but they are not relevant to this check.

NG → **Replace side airbag sensor assembly (RH).**

OK →

From the results of the above inspection, the malfunctioning part can now be considered normal. To make sure of this, use the simulation method to check.

DI6ZX-04

DTC	B1141/33	Side Airbag Sensor Assembly (LH) Malfunction

CIRCUIT DESCRIPTION

The side airbag sensor assembly (LH) consists of the safing sensor, diagnosis circuit and lateral deceleration sensor, etc.
It receives signals from the lateral deceleration sensor, judges whether or not the SRS must be activated, and detects diagnosis system malfunction.
DTC B1141/33 is recorded when occurrence of a malfunction in the side airbag sensor assembly (LH) is detected.

DTC No.	DTC Detecting Condition	Trouble Area
B1141/33	• Side airbag sensor assembly (LH) malfunction	• Side airbag sensor assembly (LH) • Wire harness • Airbag sensor assembly

WIRING DIAGRAM

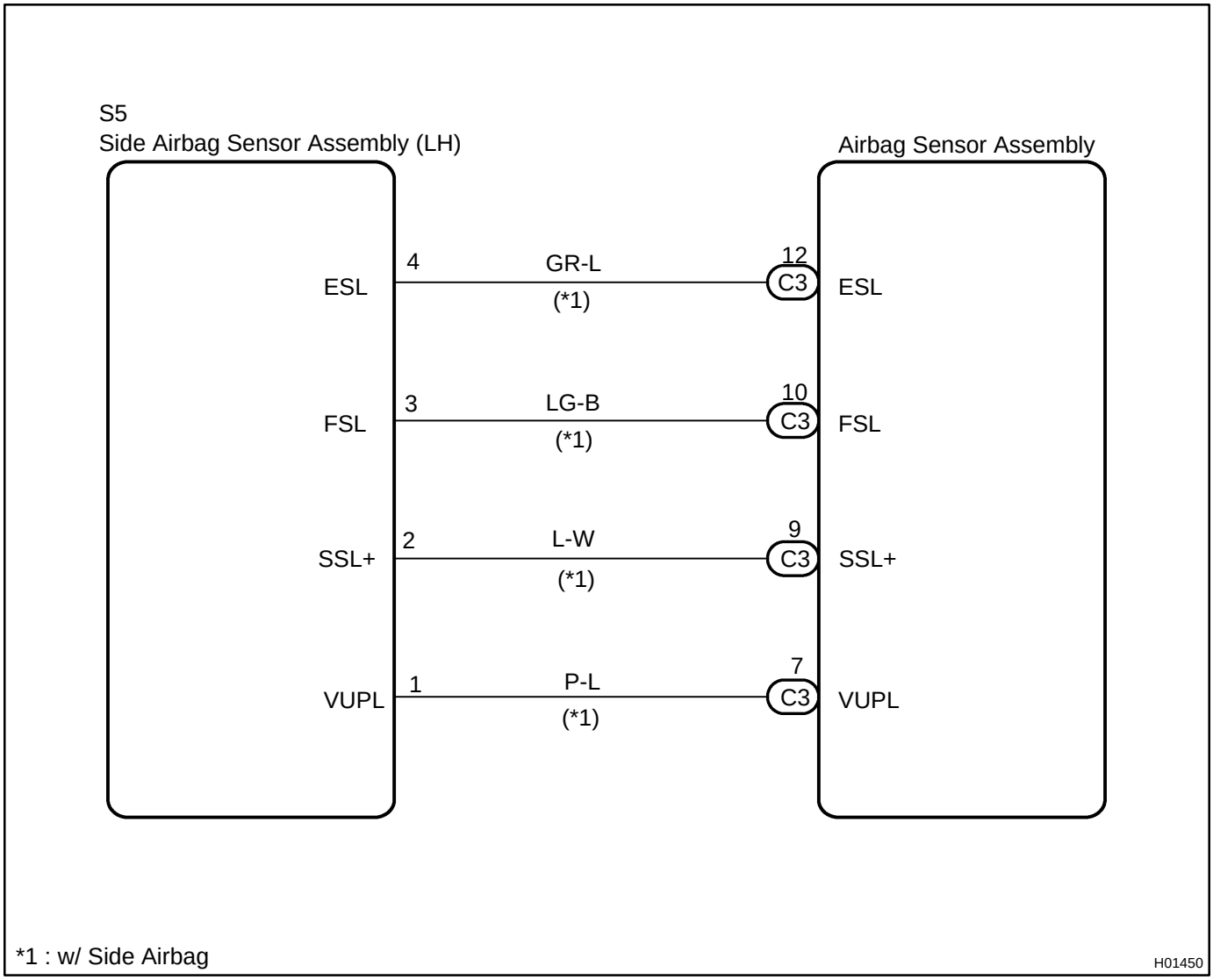

*1 : w/ Side Airbag

H01450

INSPECTION PROCEDURE

1	**Is DTC B1141/33 output?**

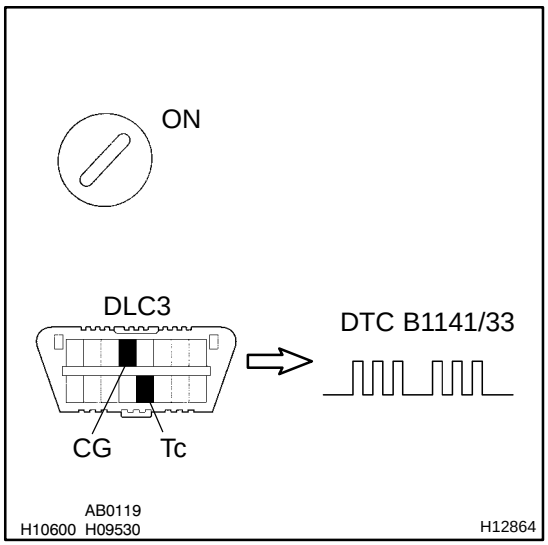

CHECK:

(a) Turn ignition switch to ON and wait at least for 20 seconds.
(b) Clear DTC stored in memory (See step 5 on page DI-239).
(c) Turn ignition switch to LOCK, and wait at least for 20 seconds.
(d) Turn ignition switch to ON and wait at least for 20 seconds.
(e) Check DTC (See page DI-239).

HINT:
Codes other than code B1141/33 may be output at this time, but they are not relevant to this check.

YES → **The malfunctioning part can now be considered normal. To make sure of this, use the simulation method to check.**

NO

2	**Is connector of side airbag sensor assembly (LH) properly connected?**

3	**Prepare for inspection (See step 1 on page DI-390).**

4	Check wire harness.

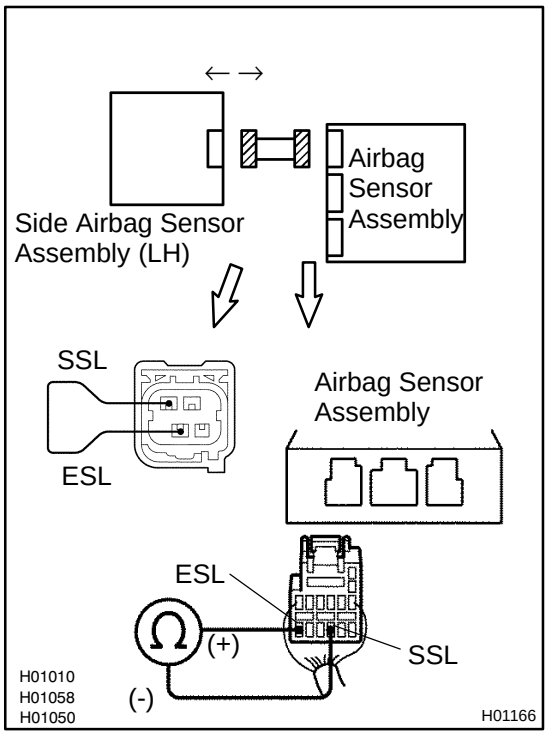

PREPARATION:

(a) Disconnect the side airbag sensor assembly connector (LH).

(b) Using a service wire, connect SSL and ESL of the connector (on the side airbag sensor assembly side) between the side airbag sensor assembly (LH) and the airbag sensor assembly.

CHECK:

For the connector (on the airbag sensor assembly side) between the side airbag sensor assembly (LH) and the airbag sensor assembly, measure the resistance between SSL and ESL.

OK:

Resistance: Below 1 Ω

NG	Repair or replace harness or connector between side airbag sensor assembly (LH) and airbag sensor assembly.

OK

5	**Check wire harness.**

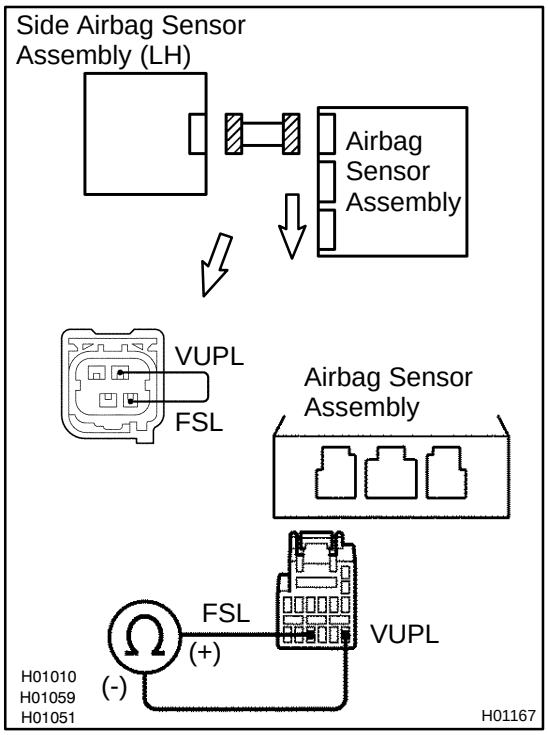

PREPARATION:

Using a service wire, connect VUPL and FSL of the connector (on the side airbag sensor assembly side) between the side airbag sensor assembly (LH) and the airbag sensor assembly.

CHECK:

For the connector (on the airbag sensor assembly side) between the side airbag sensor assembly (LH) and the airbag sensor assembly, measure the resistance between VUPL and FSL.

OK:

Resistance: Below 1 Ω

NG → **Repair or replace harness or connector between side airbag sensor assembly (LH) and airbag sensor assembly.**

OK

6	Check wire harness (to ground).

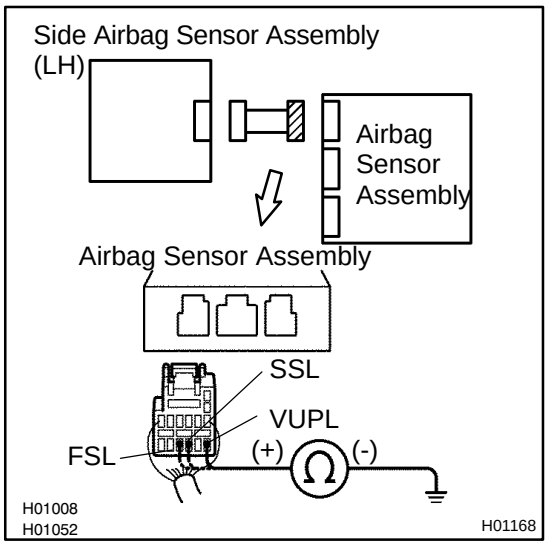

CHECK:

For the connector (on the airbag sensor assembly side) between the side airbag sensor assembly (LH) and the airbag sensor assembly, measure the resistance between body ground and each of SSL, VUPL and FSL.

OK:

Resistance: 1 MΩ or Higher

NG → **Repair or replace harness or connector between side airbag sensor assembly (LH) and airbag sensor assembly.**

OK

7	Check wire harness (to B+).

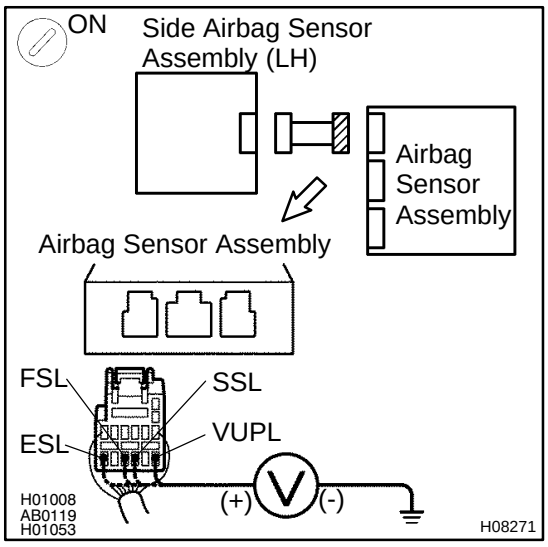

CHECK:

(a) Turn ignition switch to ON.

(b) For the connector (on the airbag sensor assembly side) between the side airbag sensor assembly (LH) and the airbag sensor assembly, measure the voltage between body ground and each of SSL, ESL, VUPL and FSL.

OK:

Voltage: 0 V

NG → **Repair or replace harness or connector between side airbag sensor assembly (LH) and airbag sensor assembly.**

OK

8	Is DTC B1141/33 output again?

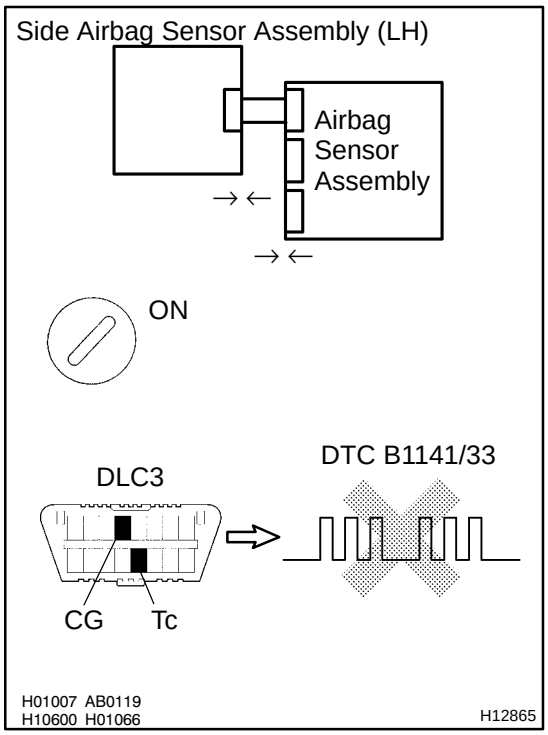

PREPARATION:

(a) Connect the connector to the side airbag sensor assembly (LH).
(b) Connect the connector to the airbag sensor assembly.
(c) Connect negative (-) terminal cable to the battery, and wait at least for 2 seconds.

CHECK:

(a) Turn ignition switch to ON and wait at least for 20 seconds.
(b) Clear DTC stored in memory (See step 5 on page DI-239).
(c) Turn ignition switch to LOCK, and wait at least for 20 seconds.
(d) Turn ignition switch to ON and wait at least for 20 seconds.
(e) Check DTC (See page DI-239).

OK:

DTC B1141/33 is not output.

HINT:

Codes other than code B1141/33 may be output at this time, but they are not relevant to this check.

NO	Go to step 9.

YES

From the results of the above inspection, the malfunctioning part can now be considered normal. To make sure of this, use the simulation method to check.

9	Check airbag sensor assembly.

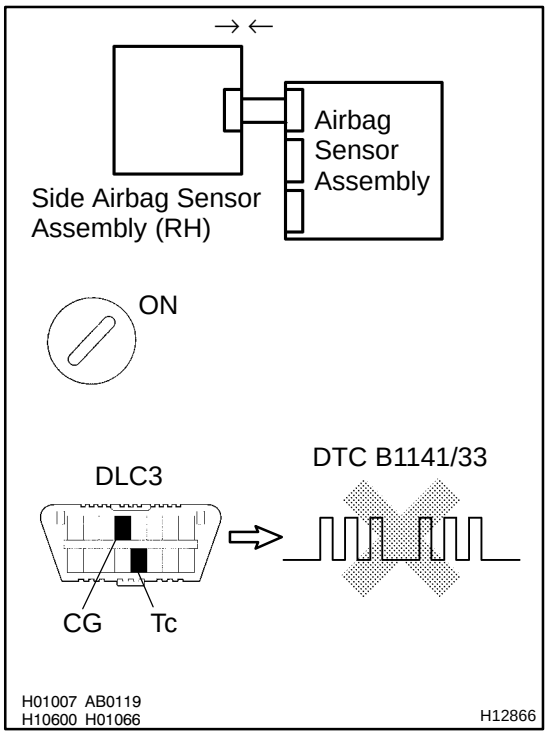

PREPARATION:

(a) Turn ignition switch to LOCK.
(b) Disconnect negative (-) terminal cable from the battery, and wait at least for 90 seconds.
(c) Disconnect the side airbag sensor (LH) from the connector and connect the side airbag sensor (RH) to the connector.
(d) Connect negative (-) terminal cable to the battery, and wait at least for 2 seconds.

CHECK:

(a) Turn ignition switch to ON and wait at least for 20 seconds.
(b) Clear DTC stored in memory (See step 5 on page DI-239).
(c) Turn ignition switch to LOCK, and wait at least for 20 seconds.
(d) Turn ignition switch to ON and wait at least for 20 seconds.
(e) Check DTC (See page DI-239).

OK:

DTC B1141/33 is not output.

HINT:
Codes other than code B1141/33 may be output at this time, but they are not relevant to this check.

NG → **Replace airbag sensor assembly.**

OK

10	Check side airbag sensor assembly (LH).

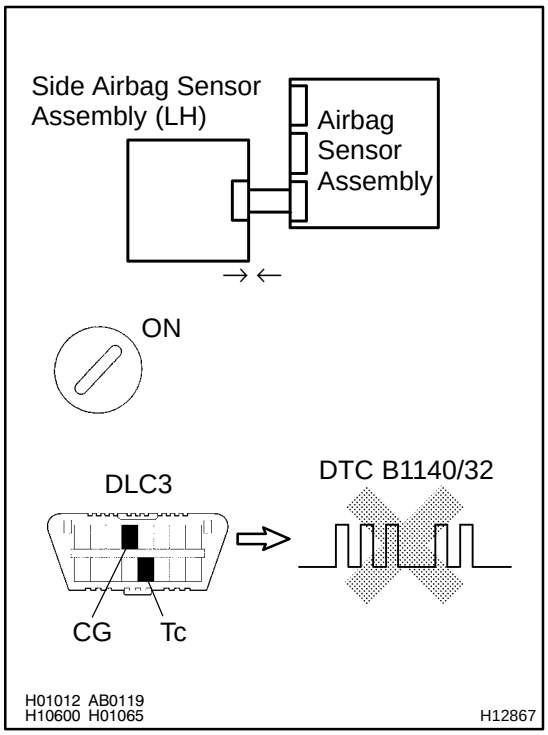

PREPARATION:

(a) Turn ignition switch to LOCK.
(b) Disconnect negative (-) terminal cable from the battery, and wait at least for 90 seconds.
(c) Connect the side airbag sensor (LH) to the connector that the side airbag sensor (RH) was connected to.
(d) Connect negative (-) terminal cable to the battery, and wait at least for 2 seconds.

CHECK:

(a) Turn ignition switch to ON and wait at least for 20 seconds.
(b) Clear DTC stored in memory (See step 5 on page DI-239).
(c) Turn ignition switch to LOCK, and wait at least for 20 seconds.
(d) Turn ignition switch to ON and wait at least for 20 seconds.
(e) Check DTC (See page DI-239).

OK:

DTC B1140/32 is not output.

HINT:

Codes other than code B1140/32 may be output at this time, but they are not relevant to this check.

NG → **Replace side airbag sensor assembly (LH).**

OK →

From the results of the above inspection, the malfunctioning part can now be considered normal. To make sure of this, use the simulation method to check.

DI18Q-37

CIRCUIT INSPECTION

DTC	B0100/13	Short in D Squib Circuit

CIRCUIT DESCRIPTION

The D squib circuit consists of the airbag sensor assembly, spiral cable and steering wheel pad.
It causes the airbag to deploy when the airbag deployment conditions are satisfied.
For details of the function of each component, see OPERATION on page RS-2 .
DTC B0100/13 is recorded when a short is detected in the D squib circuit.

DTC No.	DTC Detecting Condition	Trouble Area
B0100/13	• Short circuit between D+ wire harness and D- wire harness of squib • D squib malfunction • Spiral cable malfunction • Airbag sensor assembly malfunction	• Steering wheel pad (D squib) • Spiral cable • Airbag sensor assembly • Wire harness

WIRING DIAGRAM

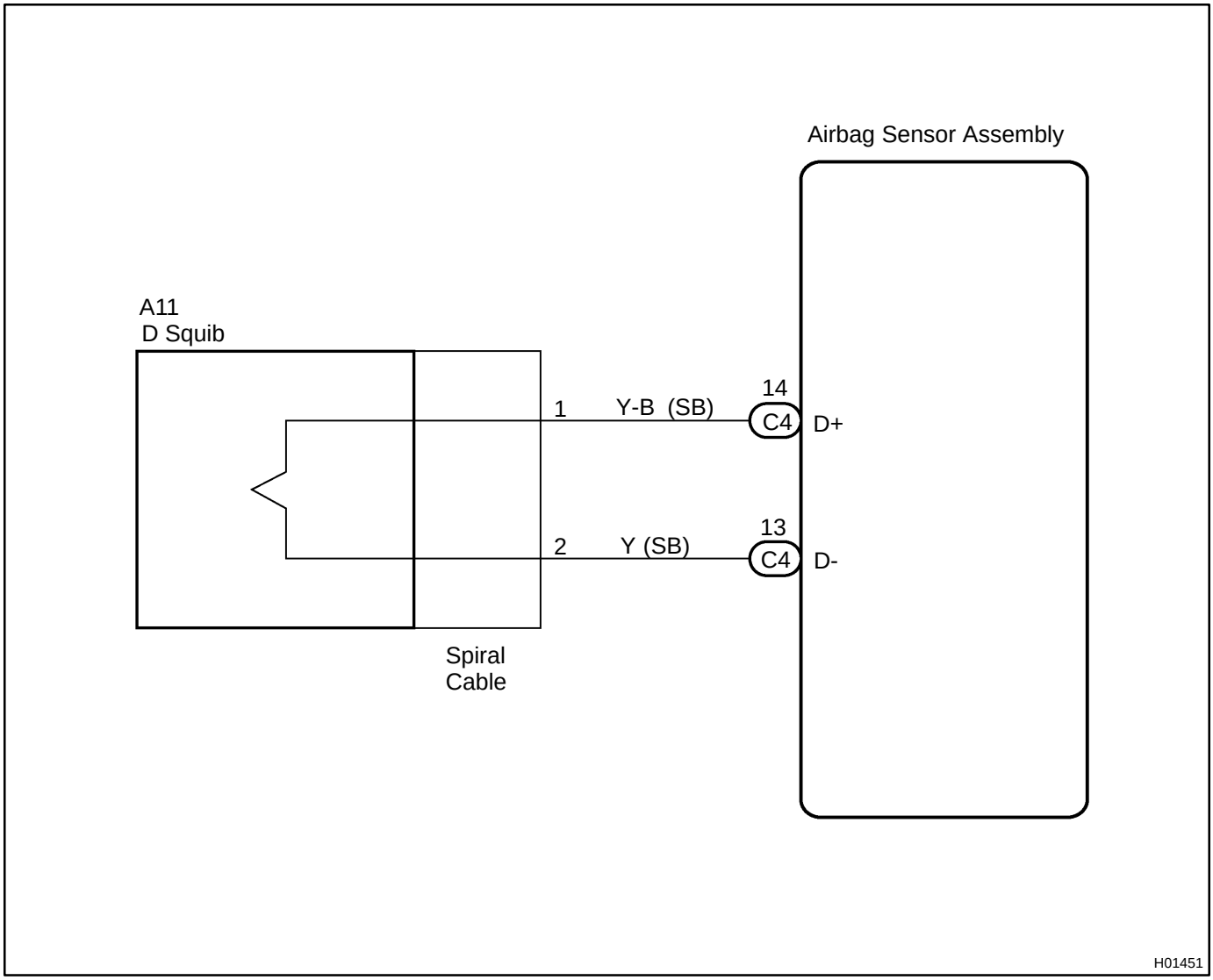

INSPECTION PROCEDURE

1	**Prepare for inspection. (See step 1 on page DI-390)**

2	**Check D squib circuit.**

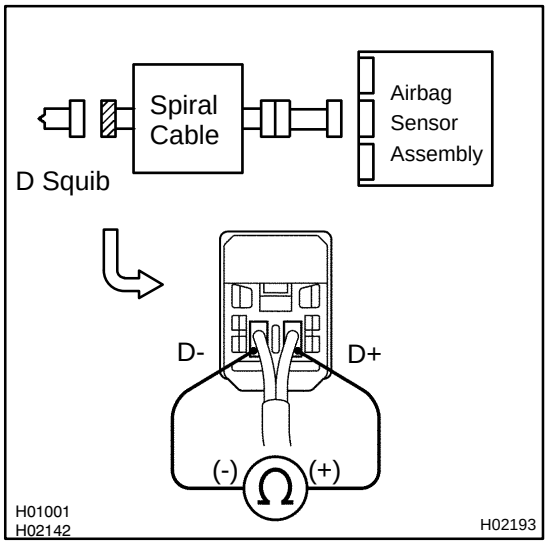

PREPARATION:

Release the airbag activation prevention mechanism of the connector (on the airbag sensor assembly side) between the airbag sensor assembly and the spiral cable.
(See page DI-239)

CHECK:

For the connector (on the spiral cable side) between the spiral cable and the steering wheel pad, measure the resistance between D+ and D-.

OK:

Resistance: 1 MΩ or Higher

NG	**Go to step 5.**

OK

3	Check airbag sensor assembly.

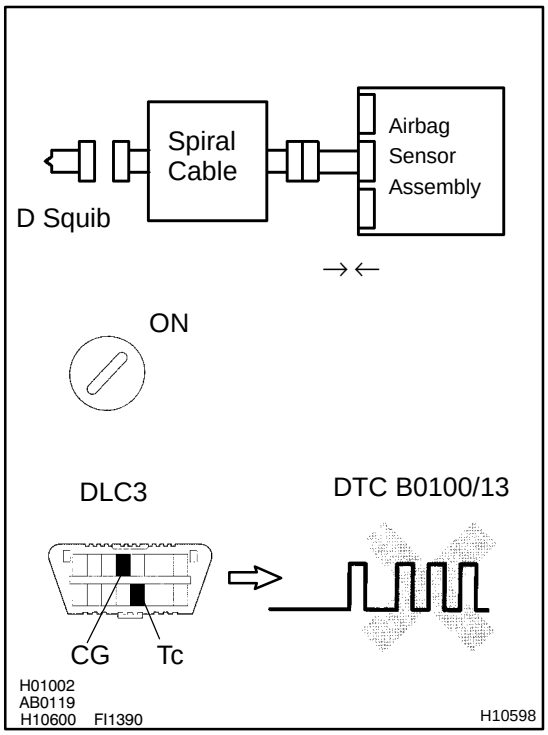

PREPARATION:

(a) Connect the connector to the airbag sensor assembly.
(b) Connect negative (-) terminal cable to the battery, and wait at least for 2 seconds.

CHECK:

(a) Turn the ignition switch to ON and wait at least for 20 seconds.
(b) Clear DTC stored in memory. (See page DI-239)
(c) Turn the ignition switch to LOCK, and wait at least for 20 seconds.
(d) Turn the ignition switch to ON, and wait at least for 20 seconds.
(e) Check DTC. (See page DI-239)

OK:

DTC B0100/13 is not output.

HINT:
Codes other than code B0100/13 may be output at this time, but they are not relevant to this check.

NG → **Replace airbag sensor assembly.**

OK

4	Check D squib.

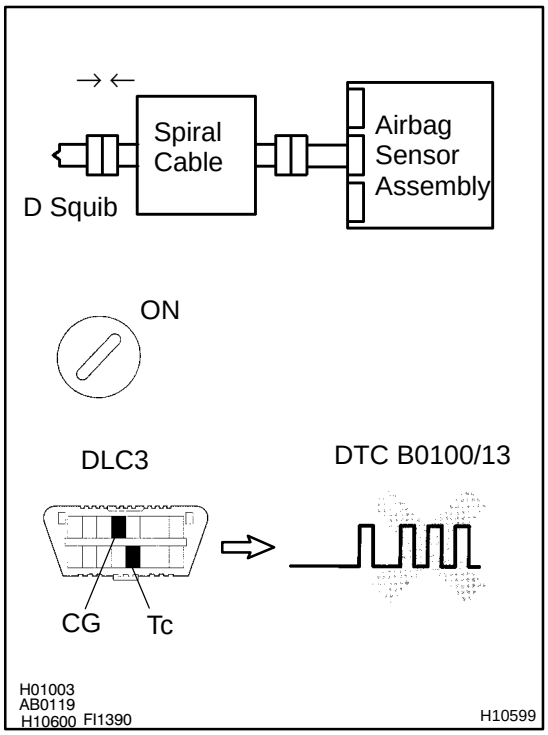

PREPARATION:

(a) Turn the ignition switch to LOCK.
(b) Disconnect negative (-) terminal cable from the battery, and wait at least for 90 seconds.
(c) Connect the steering wheel pad connector.
(d) Connect negative (-) terminal cable to the battery, and wait at least for 2 seconds.

CHECK:

(a) Turn the ignition switch to LOCK, and wait at least for 20 seconds.
(b) Turn the ignition switch to ON, and wait at least for 20 seconds.
(c) Clear DTC stored in memory. (See page DI-239)
(d) Turn the ignition switch to LOCK, and wait at least for 20 seconds.
(e) Turn the ignition switch to ON, and wait at least for 20 seconds.
(f) Check DTC. (See page DI-239)

OK:

DTC B0100/13 is not output.

HINT:

Codes other than code B0100/13 may be output at this time, but they are not relevant to this check.

NG → **Replace steering wheel pad.**

OK →

From the results of the above inspection, the malfunctioning part can now be considered normal. To make sure of this, use the simulation method to check.

5	Check spiral cable.

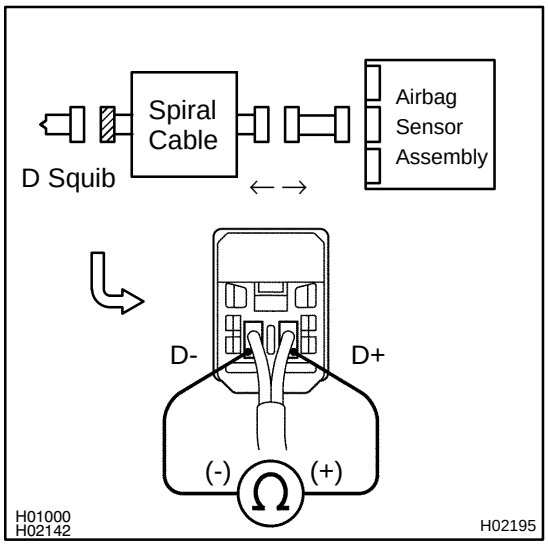

PREPARATION:

(a) Disconnect the connector between the airbag sensor assembly and the spiral cable.

(b) Release the airbag activation prevention mechanism of the spiral cable connector on the airbag sensor assembly side. (See page DI-239)

CHECK:

For the connector (on the spiral cable side) between the spiral cable and the steering wheel pad, measure the resistance between D+ and D-.

OK:

Resistance: 1 MΩ or Higher

NG	Repair or replace spiral cable.

OK

6	Check harness between airbag sensor assembly and spiral cable.

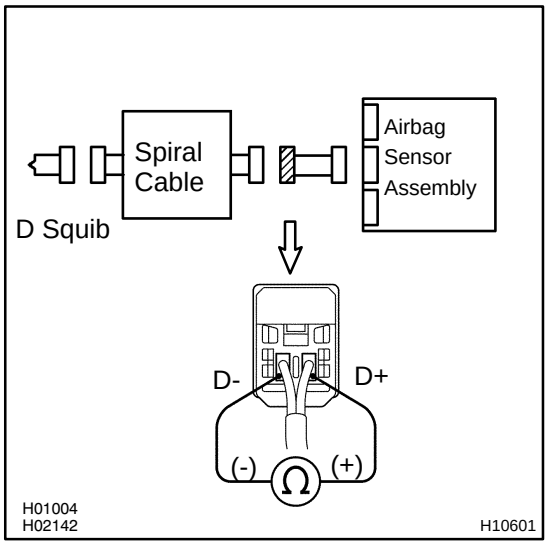

PREPARATION:

Release the airbag activation prevention mechanism of the connector (on the airbag sensor assembly side) between the airbag sensor assembly and the spiral cable.
(See page DI-239)

CHECK:

For the connector (on the spiral cable side) between the airbag sensor assembly and the spiral cable, measure the resistance between D+ and D-.

OK:

Resistance: 1 MΩ or Higher

NG	Repair or replace harness or connector between airbag sensor assembly and spiral cable.

OK

From the results of the above inspection, the malfunctioning part can now be considered normal. To make sure of this, use the simulation method to check.

DI18R-33

DTC	B0101/14	Open in D Squib Circuit

CIRCUIT DESCRIPTION

The D squib circuit consists of the airbag sensor assembly, spiral cable and steering wheel pad.
It causes the airbag to deploy when the airbag deployment conditions are satisfied.
For details of the function of each component, see OPERATION on page RS-2 .
DTC B0101/14 is recorded when an open is detected in the D squib circuit.

DTC No.	DTC Detecting Condition	Trouble Area
B0101/14	• Open circuit in D+ wire harness or D- wire harness of squib • D squib malfunction • Spiral cable malfunction • Airbag sensor assembly malfunction	• Steering wheel pad (D squib) • Spiral cable • Airbag sensor assembly • Wire harness

WIRING DIAGRAM

See page DI-254 .

INSPECTION PROCEDURE

1	**Prepare for inspection. (See step 1 on page DI-390)**

2	**Check D squib circuit.**

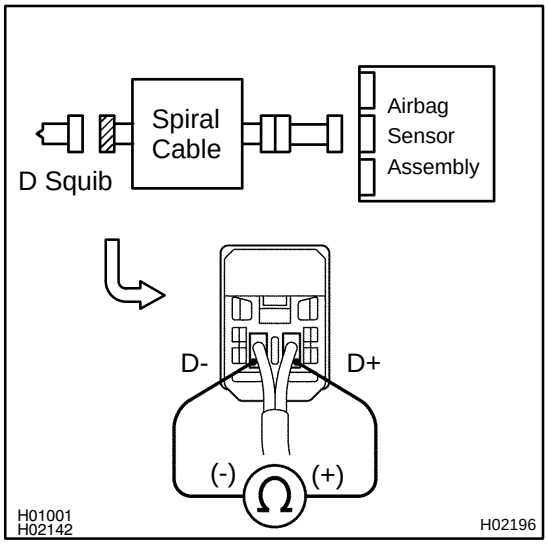

CHECK:

For the connector (on the spiral cable side) between the spiral cable and the steering wheel pad, measure the resistance between D+ and D-.

OK:

Resistance: Below 1 Ω

NG → **Go to step 5.**

OK

3	Check airbag sensor assembly.

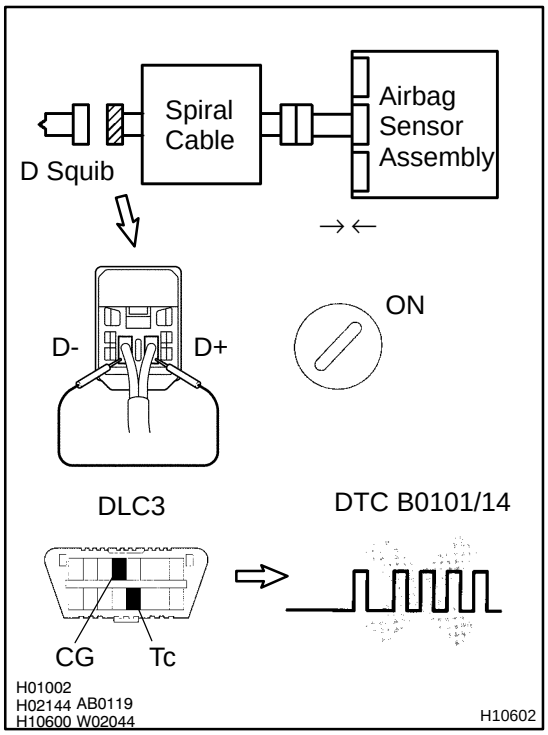

PREPARATION:

(a) Connect the connector to the airbag sensor assembly.
(b) Using a service wire, connect D+ and D- of the connector (on the spiral cable side) between the spiral cable and the steering wheel pad.
(c) Connect negative (-) terminal cable to the battery, and wait at least for 2 seconds.

CHECK:

(a) Turn the ignition switch to ON, and wait at least for 20 seconds.
(b) Clear DTC stored in memory. (See page DI-239)
(c) Turn the ignition switch to LOCK, and wait at least for 20 seconds.
(d) Turn the ignition switch to ON, and wait at least for 20 seconds.
(e) Check DTC. (See page DI-239)

OK:

DTC B0101/14 is not output.

HINT:

Codes other than code B0101/14 may be output at this time, but they are not relevant to this check.

NG	Replace airbag sensor assembly.

OK

4	Check D squib.

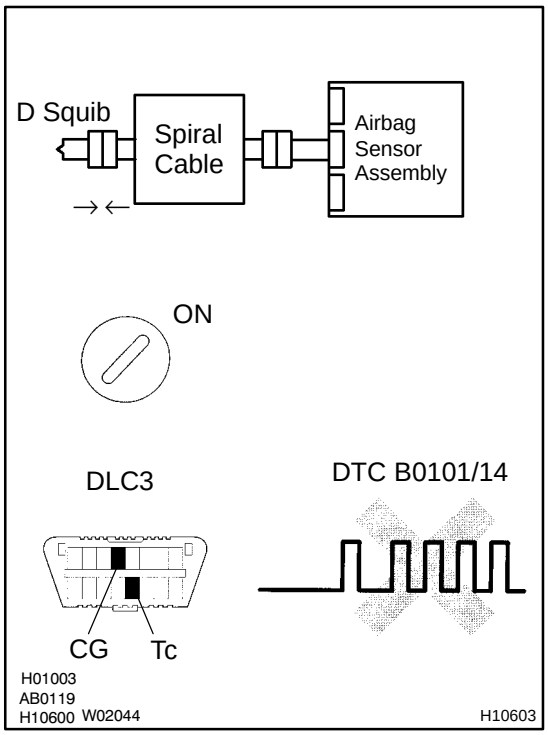

PREPARATION:

(a) Turn the ignition switch to LOCK.
(b) Disconnect negative (-) terminal cable from the battery, and wait at least for 90 seconds.
(c) Connect the steering wheel pad connector.
(d) Connect negative (-) terminal cable to the battery, and wait at least for 2 seconds.

CHECK:

(a) Turn the ignition switch to ON, and wait at least for 20 seconds.
(b) Clear DTC stored in memory. (See page DI-239)
(c) Turn the ignition switch to LOCK, and wait at least for 20 seconds.
(d) Turn the ignition switch to ON, and wait at least for 20 seconds.
(e) Check DTC. (See page DI-239)

OK:

DTC B0101/14 is not output.

HINT:

Codes other than code B0101/14 may be output at this time, but they are not relevant to this check.

NG	Replace steering wheel pad.

OK

From the results of the above inspection, the malfunctioning part can now be considered normal. To make sure of this, use the simulation method to check.

5	Check spiral cable.

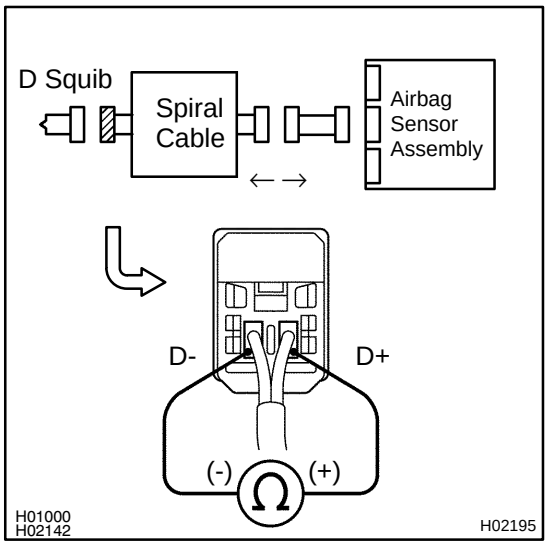

PREPARATION:
Disconnect the connector between the airbag sensor assembly and the spiral cable.

CHECK:
For the connector (on the spiral cable side) between the spiral cable and the steering wheel pad, measure the resistance between D+ and D-.

OK:

Resistance: Below 1 Ω

NG → **Repair or replace spiral cable.**

OK

6	Check harness between airbag sensor assembly and spiral cable.

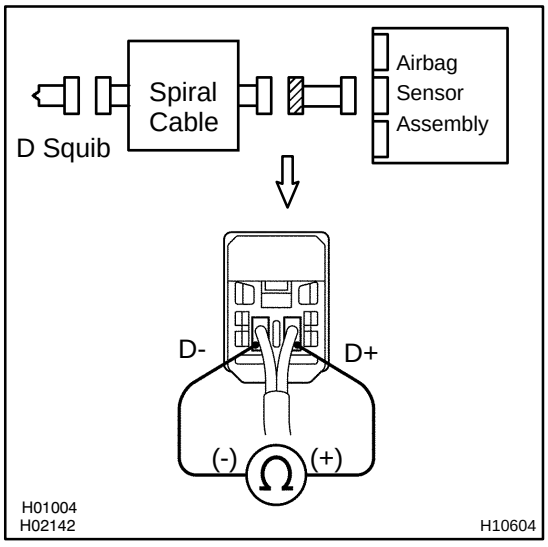

CHECK:
For the connector (on the spiral cable side) between the airbag sensor assembly and the spiral cable, measure the resistance between D+ and D-.

OK:

Resistance: Below 1 Ω

NG → **Repair or replace harness or connector between airbag sensor assembly and spiral cable.**

OK

From the results of the above inspection, the malfunctioning part can now be considered normal. To make sure of this, use the simulation method to check.

DI4L2-12

DTC	B0102/11	Short in D Squib Circuit (to Ground)

CIRCUIT DESCRIPTION

The D squib circuit consists of the airbag sensor assembly, spiral cable and steering wheel pad.
It causes the SRS to deploy when the SRS deployment conditions are satisfied.
For details of the function of each component, see OPERATION on page RS-2 .
DTC B0102/11 is recorded when a ground short is detected in the D squib circuit.

DTC No.	DTC Detecting Condition	Trouble Area
B0102/11	• Short circuit in D squib wire harness (to ground) • D squib malfunction • Spiral cable malfunction • Airbag sensor assembly malfunction	• Steering wheel pad (D squib) • Spiral cable • Airbag sensor assembly • Wire harness

WIRING DIAGRAM

See page DI-254 .

INSPECTION PROCEDURE

1	**Prepare for inspection (See step 1 on page DI-390).**

2	**Check D squib circuit.**

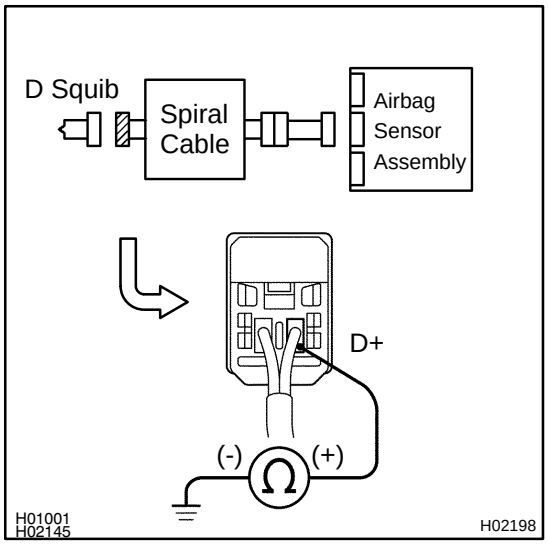

CHECK:

For the connector (on the spiral cable side) between the spiral cable and the steering wheel pad, measure the resistance between D+ and body ground.

OK:

Resistance: 1 MΩ or Higher

NG → **Go to step 5.**

OK

3	Check airbag sensor assembly.

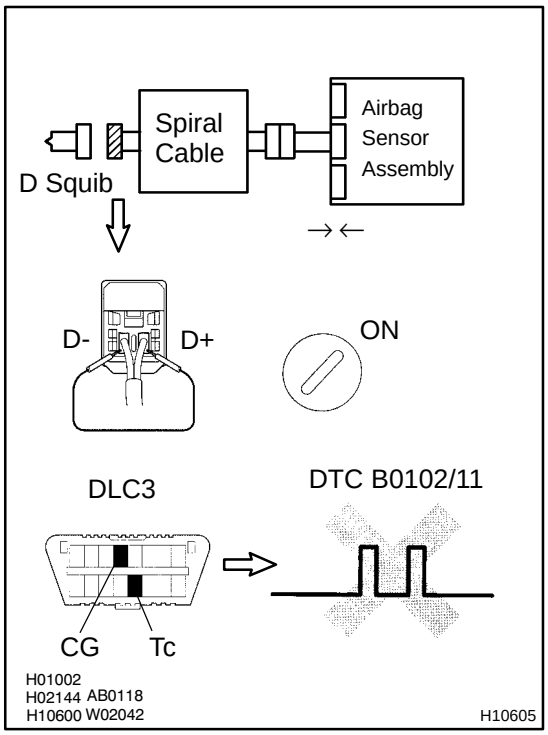

PREPARATION:

(a) Connect the connector to the airbag sensor assembly.
(b) Using a service wire, connect D+ and D- of the connector (on the spiral cable side) between the spiral cable and the steering wheel pad.
(c) Connect negative (-) terminal cable to the battery, and wait at least for 2 seconds.

CHECK:

(a) Turn the ignition switch to ON, and wait at least for 20 seconds.
(b) Clear DTC stored in memory (See step 5 on page DI-239).
(c) Turn the ignition switch to LOCK, and wait at least for 20 seconds.
(d) Turn the ignition switch to ON, and wait at least for 20 seconds.
(e) Check DTC (See page DI-239).

OK:

DTC B0102/11 is not output.

HINT:
Codes other than code B0102/11 may be output at this time, but they are not relevant to this check.

NG	Replace airbag sensor assembly.

OK

4	Check D squib.

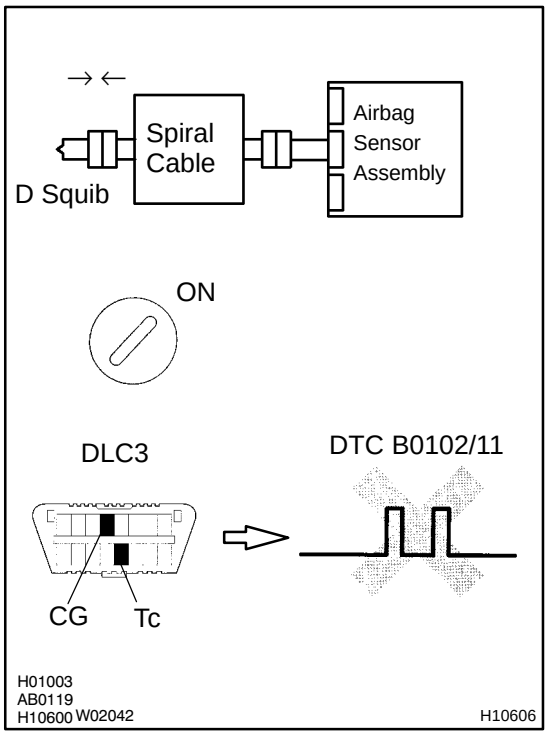

PREPARATION:

(a) Turn the ignition switch to LOCK.
(b) Disconnect negative (-) terminal cable from the battery, and wait at least for 90 seconds.
(c) Connect the steering wheel pad connector.
(d) Connect negative (-) terminal cable to the battery, and wait at least for 2 seconds.

CHECK:

(a) Turn the ignition switch to ON, and wait at least for 20 seconds.
(b) Clear DTC stored in memory (See step 5 on page DI-239).
(c) Turn the ignition switch to LOCK, and wait at least for 20 seconds.
(d) Turn the ignition switch to ON, and wait at least for 20 seconds.
(e) Check DTC (See page DI-239).

OK:

DTC B0102/11 is not output.

HINT:

Codes other than code B0102/11 may be output at this time, but they are not relevant to this check.

NG → **Replace steering wheel pad.**

OK

From the results of the above inspection, the malfunctioning part can now be considered normal. To make sure of this, use the simulation method to check. If the malfunctioning part can not be detected by the simulation method, replace all SRS components including the wire harness.

5	Check spiral cable.

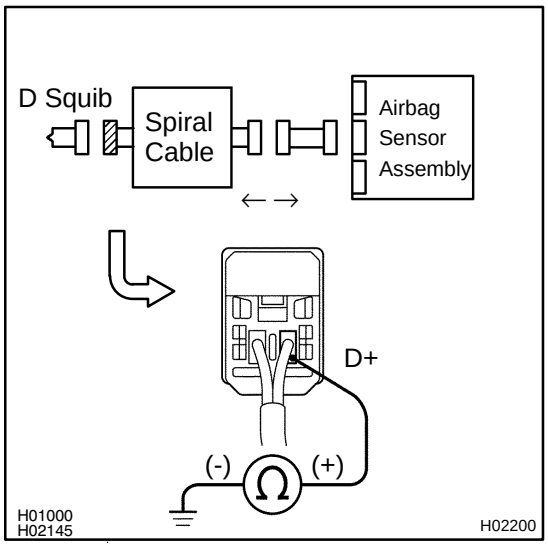

PREPARATION:
Disconnect the connector between the airbag sensor assembly and the spiral cable.

CHECK:
For the connector (on the spiral cable side) between the steering wheel pad and the spiral cable, measure the resistance between D+ and body ground.

OK:
Resistance: 1 MΩ or Higher

NG → **Repair or replace spiral cable.**

OK

6	Check harness between airbag sensor assembly and spiral cable.

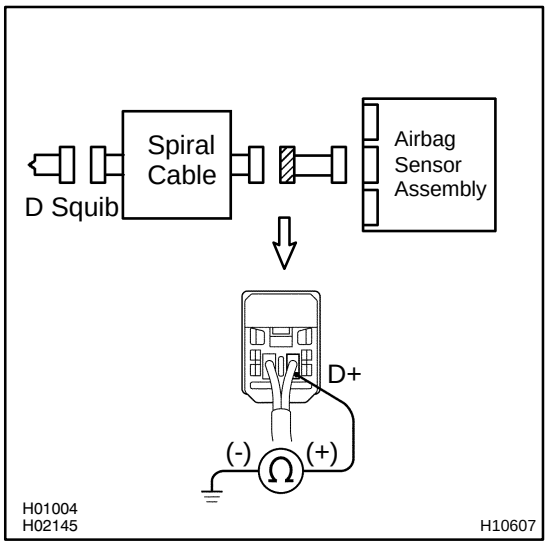

CHECK:
For the connector (on the spiral cable side) between the spiral cable and the airbag sensor assembly, measure the resistance between D+ and body ground.

OK:
Resistance: 1 MΩ or Higher

NG → **Repair or replace harness between airbag sensor assembly and spiral cable.**

OK

From the results of the above inspection, the malfunctioning part can now be considered normal. To make sure of this, use the simulation method to check. If the malfunctioning part can not be detected by the simulation method, replace all SRS components including the wire harness.

DI4L3-12

DTC	B0103/12	Short in D Squib Circuit (to B+)

CIRCUIT DESCRIPTION

The D squib circuit consists of the airbag sensor assembly, spiral cable and steering wheel pad.
It causes the SRS to deploy when the SRS deployment conditions are satisfied.
For details of the function of each component, see OPERATION on page RS-2 .
DTC B0103/12 is recorded when a B+ short is detected in the D squib circuit.

DTC No.	DTC Detecting Condition	Trouble Area
B0103/12	• Short circuit in D squib wire harness (to B+) • D squib malfunction • Spiral cable malfunction • Airbag sensor assembly malfunction	• Steering wheel pad (D squib) • Spiral cable • Airbag sensor assembly • Wire harness

WIRING DIAGRAM

See page DI-254 .

INSPECTION PROCEDURE

1	**Prepare for inspection (See step 1 on page DI-390).**

2	**Check D squib circuit.**

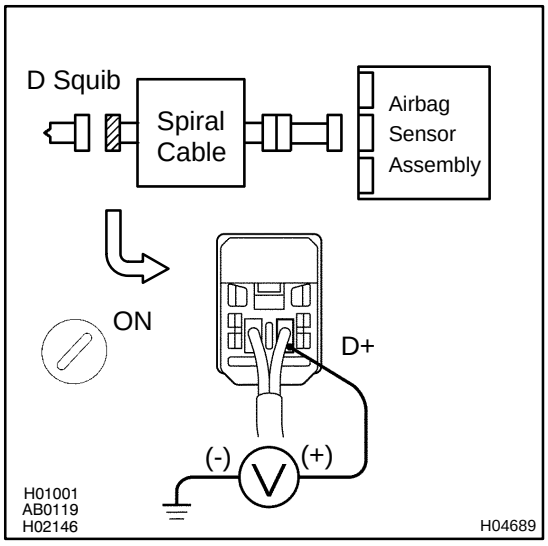

CHECK:

(a) Turn the ignition switch to ON.

(b) For the connector (on the spiral cable side) between the spiral cable and the steering wheel pad, measure the voltage between D+ and body ground.

OK:

Voltage: 0 V

NG → **Go to step 5.**

OK

3	Check airbag sensor assembly.

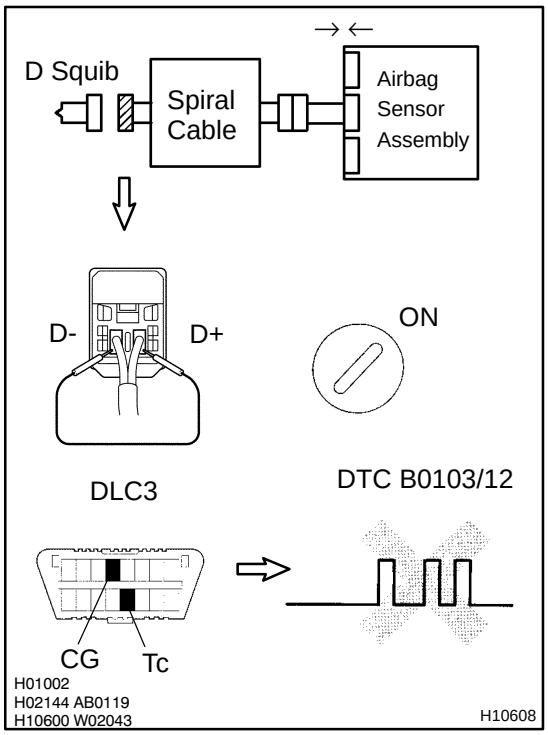

PREPARATION:

(a) Connect the connector to the airbag sensor assembly.
(b) Using a service wire, connect D+ and D- of the connector (on the spiral cable side) between the spiral cable and the steering wheel pad.
(c) Connect negative (-) terminal cable to the battery, and wait at least for 2 seconds.

CHECK:

(a) Turn the ignition switch to ON, and wait at least for 20 seconds.
(b) Clear DTC stored in memory (See step 5 on page DI-239).
(c) Turn the ignition switch to LOCK, and wait at least for 20 seconds.
(d) Turn the ignition switch to ON, and wait at least for 20 seconds.
(e) Check DTC (See page DI-239).

OK:

DTC B0103/12 is not output.

HINT:
Codes other than code B0103/12 may be output at this time, but they are not relevant to this check.

NG	Replace airbag sensor assembly.

OK

4	Check D squib.

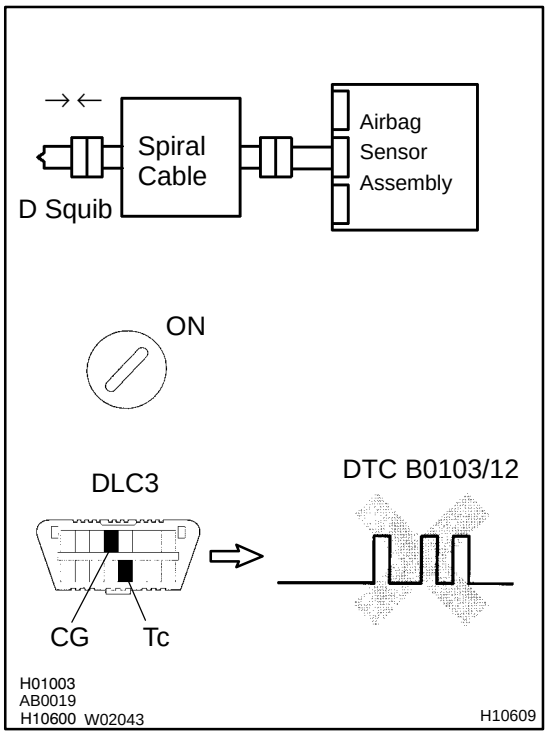

PREPARATION:

(a) Turn the ignition switch to LOCK.
(b) Disconnect negative (-) terminal cable from the battery, and wait at least for 90 seconds.
(c) Connect the steering wheel pad connector.
(d) Connect negative (-) terminal cable to the battery, and wait at least for 2 seconds.

CHECK:

(a) Turn the ignition switch to ON, and wait at least for 20 seconds.
(b) Clear DTC stored in memory (See step 5 on page DI-239).
(c) Turn the ignition switch to LOCK, and wait at least for 20 seconds.
(d) Turn the ignition switch to ON, and wait at least for 20 seconds.
(e) Check DTC (See page DI-239).

OK:

DTC B0103/12 is not output.

HINT:

Codes other than code B0103/12 may be output at this time, but they are not relevant to this check.

NG	Replace steering wheel pad.

OK

From the results of the above inspection, the malfunctioning part can now be considered normal. To make sure of this, use the simulation method to check. If the malfunctioning part can not be detected by the simulation method, replace all SRS components including the wire harness.

5	Check spiral cable.

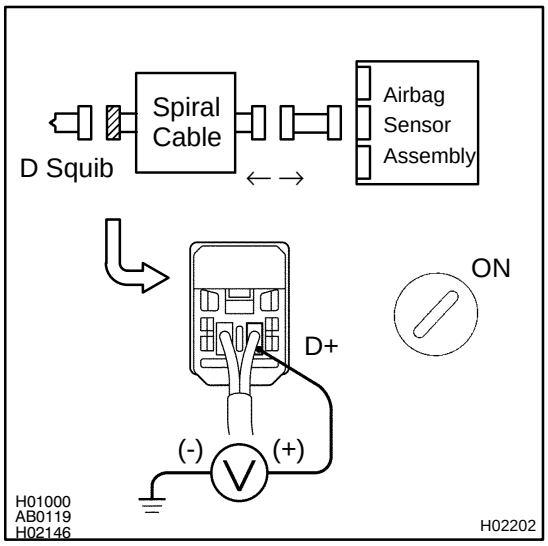

PREPARATION:

(a) Turn ignition switch to LOCK.

(b) Disconnect the connector between the airbag sensor assembly and the spiral cable.

CHECK:

(a) Turn the ignition switch to ON.

(b) For the connector (on the spiral cable side) between the spiral cable and the steering wheel pad, measure the voltage between D+ and body ground.

OK:

Voltage: 0 V

NG → **Repair or replace spiral cable.**

OK

6	Check harness between airbag sensor assembly and spiral cable.

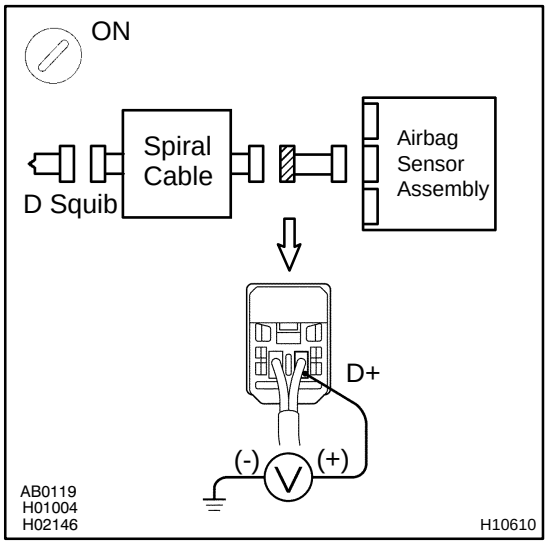

CHECK:

(a) Turn the ignition switch to ON.

(b) For the connector (on the spiral cable side) between the spiral cable and airbag sensor assembly, measure the voltage between D+ and body ground.

OK:

Voltage: 0 V

NG → **Repair or replace harness between airbag sensor assembly and spiral cable.**

OK

From the results of the above inspection, the malfunctioning part can now be considered normal. To make sure of this, use the simulation method to check. If the malfunctioning part can not be detected by the simulation method, replace all SRS components including the wire harness.

DI1B6-38

DTC	B0105/53	Short in P Squib Circuit

CIRCUIT DESCRIPTION

The P squib circuit consists of the airbag sensor assembly and front passenger airbag assembly.
It causes the SRS to deploy when the SRS deployment conditions are satisfied.
For details of the function of each component, see OPERATION on page RS-2 .
DTC B0105/53 is recorded when a short is detected in the P squib circuit.

DTC No.	DTC Detecting Condition	Trouble Area
B0105/53	• Short circuit in P squib wire harness • P squib malfunction • Airbag sensor assembly malfunction	• Front passenger airbag assembly (P squib) • Airbag sensor assembly • Wire harness

WIRING DIAGRAM

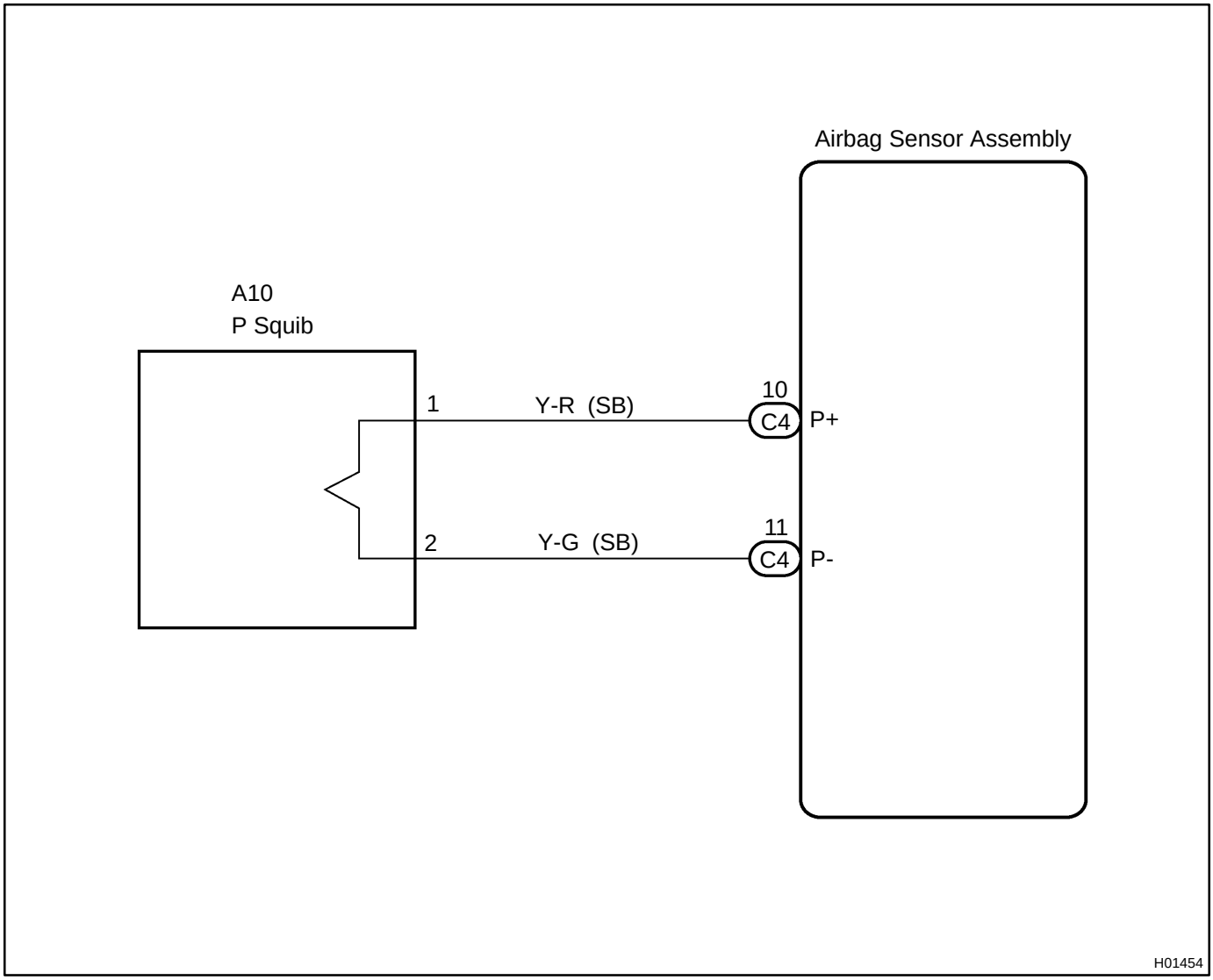

INSPECTION PROCEDURE

1	**Prepare for inspection. (See step 1 on page DI-390)**

2	**Check P squib circuit.**

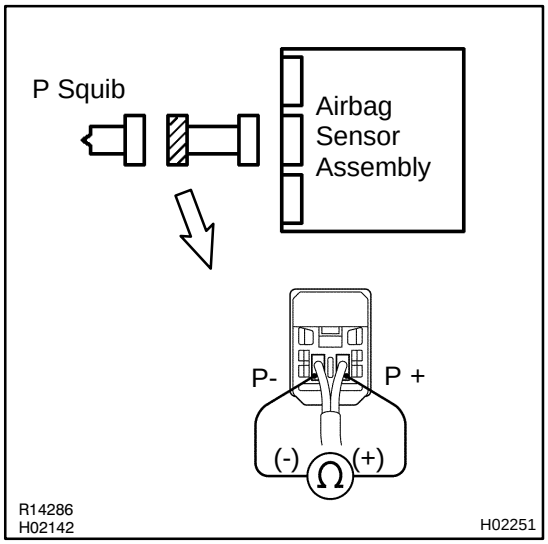

PREPARATION:

Release the airbag activation prevention mechanism of the connector (on the airbag sensor assembly side) between the front passenger airbag assembly and the airbag sensor assembly. (See page DI-239)

CHECK:

For the connector (on the front passenger airbag assembly side) between the front passenger airbag assembly and the airbag sensor assembly, measure the resistance between P+ and P-.

OK:

Resistance: 1 MΩ or Higher

NG → **Repair or replace harness or connector between front passenger airbag assembly and airbag sensor assembly.**

OK

3	Check airbag sensor assembly.

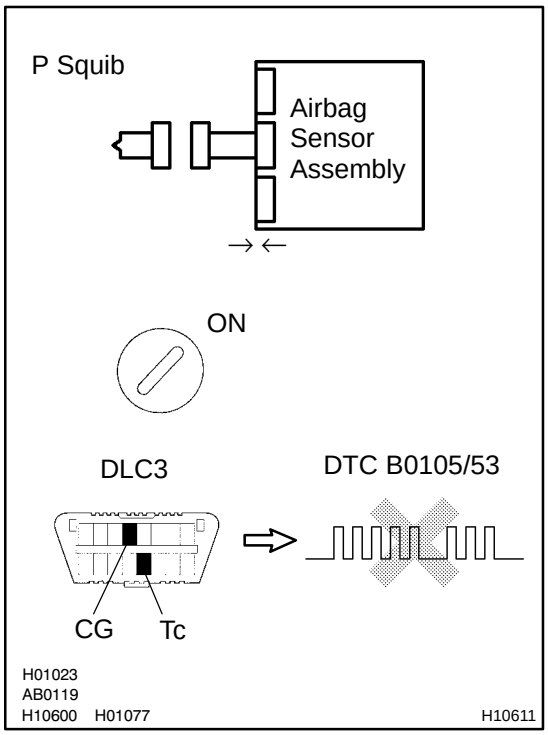

PREPARATION:

(a) Connect the connector to the airbag sensor assembly.
(b) Connect negative (-) terminal cable to the battery, and wait at least for 2 seconds.

CHECK:

(a) Turn the ignition switch to ON and wait at least for 20 seconds.
(b) Clear DTC stored in memory. (See page DI-239)
(c) Turn the ignition switch to LOCK, and wait at least for 20 seconds.
(d) Turn the ignition switch to ON, and wait at least for 20 seconds.
(e) Check DTC. (See page DI-239)

OK:

DTC B0105/53 is not output.

HINT:
Codes other than code B0105/53 may be output at this time, but they are not relevant to this check.

NG → **Replace airbag sensor assembly.**

OK

4	Check P squib.

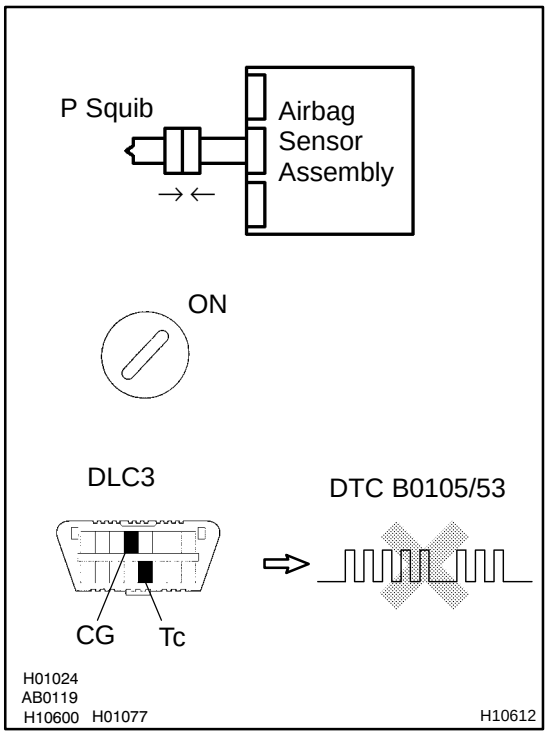

PREPARATION:

(a) Turn the ignition switch to LOCK.
(b) Disconnect negative (-) terminal cable from the battery, and wait at least for 90 seconds.
(c) Connect the front passenger airbag assembly connector.
(d) Connect negative (-) terminal cable to the battery, and wait at least for 2 seconds.

CHECK:

(a) Turn the ignition switch to LOOK, and wait at least for 20 seconds.
(b) Turn the ignition switch to ON, and wait at least for 20 seconds.
(c) Clear DTC stored in memory. (See page DI-239)
(d) Turn the ignition switch to LOCK, and wait at least for 20 seconds.
(e) Turn the ignition switch to ON, and wait at least for 20 seconds.
(f) Check DTC. (See page DI-239)

OK:

DTC B0105/53 is not output.

HINT:

Codes other than code B0105/53 may be output at this time, but they are not relevant to this check.

NG → **Replace front passenger airbag assembly.**

OK

From the results of the above inspection, the malfunctioning part can now be considered normal. To make sure of this, use the simulation method to check.

DI1B7-30

DTC	B0106/54	Open in P Squib Circuit

CIRCUIT DESCRIPTION

The P squib circuit consists of the airbag sensor assembly and front passenger airbag assembly.
It causes the SRS to deploy when the SRS deployment conditions are satisfied.
For details of the function of each component, see OPERATION on page RS-2 .
DTC B0106/54 is recorded when an open is detected in the P squib circuit.

DTC No.	DTC Detecting Condition	Trouble Area
B0106/54	• Open circuit in P+ wire harness or P- wire harness of squib • P squib malfunction • Airbag sensor assembly malfunction	• Front passenger airbag assembly (P squib) • Airbag sensor assembly • Wire harness

WIRING DIAGRAM

See page DI-271 .

INSPECTION PROCEDURE

1	**Prepare for inspection. (See step 1 on page DI-390)**

2	**Check P squib circuit.**

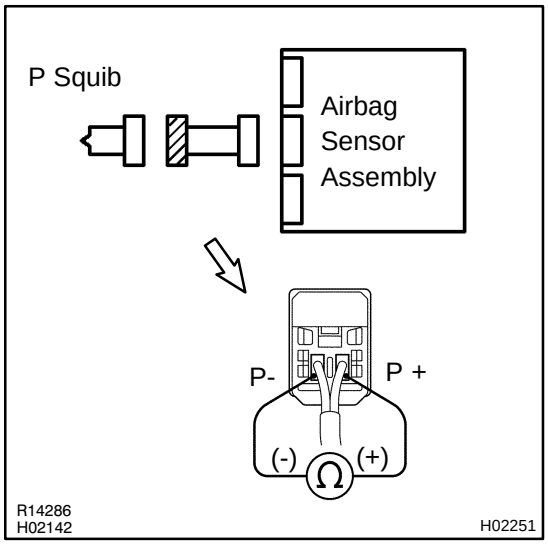

CHECK:

For the connector (on the front passenger airbag assembly side) between the front passenger airbag assembly and the airbag sensor assembly, measure the resistance between P+ and P-.

OK:

Resistance: Below 1 Ω

NG → **Repair or replace harness or connector between front passenger airbag assembly and airbag sensor assembly.**

OK

3	Check airbag sensor assembly.

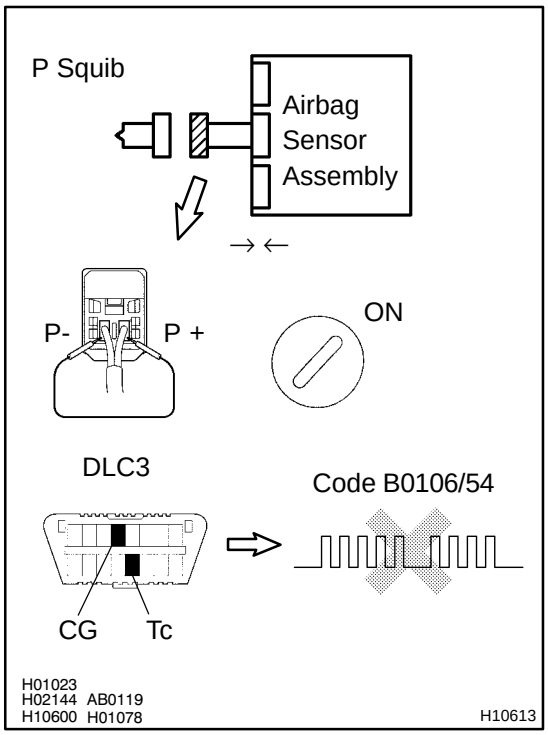

PREPARATION:

(a) Connect the connector to the airbag sensor assembly.
(b) Using a service wire, connect P+ and P- of the connector (on the front passenger airbag assembly side) between the front passenger airbag assembly and the airbag sensor assembly.
(c) Connect negative (-) terminal cable to the battery, and wait at least for 2 seconds.

CHECK:

(a) Turn the ignition switch to ON and wait at least for 20 seconds.
(b) Clear DTC stored in memory. (See page DI-239)
(c) Turn the ignition switch to LOCK, and wait at least for 20 seconds.
(d) Turn the ignition switch to ON, and wait at least for 20 seconds.
(e) Check DTC. (See page DI-239)

OK:

DTC B0106/54 is not output.

HINT:
Codes other than code B0106/54 may be output at this time, but they are not relevant to this check.

NG → **Replace airbag sensor assembly.**

OK

4	Check P squib.

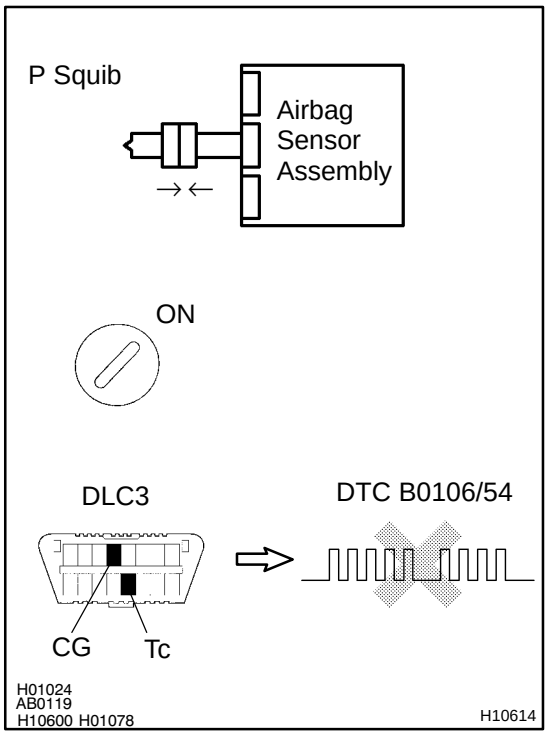

PREPARATION:

(a) Turn the ignition switch to LOCK.
(b) Disconnect negative (-) terminal cable from the battery, and wait at least for 90 seconds.
(c) Connect the front passenger airbag assembly connector.
(d) Connect negative (-) terminal cable to the battery, and wait at least for 2 seconds.

CHECK:

(a) Turn the ignition switch to ON, and wait at least for 20 seconds.
(b) Clear DTC stored in memory. (See page DI-239)
(c) Turn the ignition switch to LOCK, and wait at least for 20 seconds.
(d) Turn the ignition switch to ON, and wait at least for 20 seconds.
(e) Check DTC. (See page DI-239)

OK:

DTC B0106/54 is not output.

HINT:

Codes other than code B0106/54 may be output at this time, but they are not relevant to this check.

NG → **Replace front passenger airbag assembly.**

OK

From the results of the above inspection, the malfunctioning part can now be considered normal. To make sure of this, use the simulation method to check.

DI1B8-20

DTC	B0107/51	Short in P Squib Circuit (to Ground)

CIRCUIT DESCRIPTION

The P squib circuit consists of the airbag sensor assembly and front passenger airbag assembly.
It causes the SRS to deploy when the SRS deployment conditions are satisfied.
For details of the function of each component, see OPERATION on page RS-2 .
DTC B0107/51 is recorded when ground short is detected in the P squib circuit.

DTC No.	DTC Detecting Condition	Trouble Area
B0107/51	• Short circuit in P squib wire harness (to ground) • P squib malfunction • Airbag sensor assembly malfunction	• Front passenger airbag assembly (P squib) • Airbag sensor assembly • Wire harness

WIRING DIAGRAM

See page DI-271 .

INSPECTION PROCEDURE

1	**Prepare for inspection (See step 1 on page DI-390).**

2	**Check P squib circuit.**

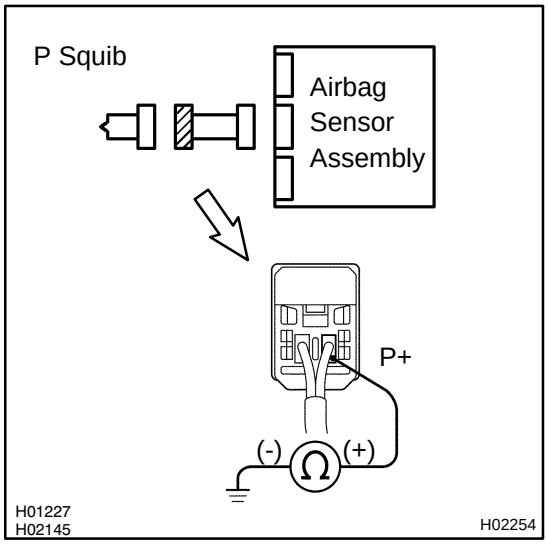

CHECK:

For the connector (on the front passenger airbag assembly side) between the front passenger airbag assembly and the airbag sensor assembly, measure the resistance between P+ and body ground.

OK:

Resistance: 1 MΩ or Higher

NG → **Repair or replace harness or connector between front passenger airbag assembly and airbag sensor assembly.**

OK

3	Check airbag sensor assembly.

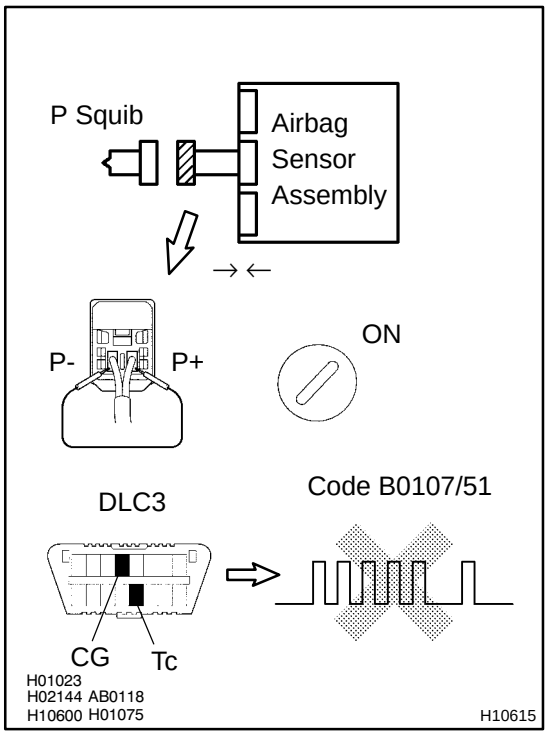

PREPARATION:

(a) Connect the connector to the airbag sensor assembly.

(b) Using a service wire, connect P+ and P- of the connector (on the front passenger airbag assembly side) between the front passenger airbag assembly and the airbag sensor assembly.

(c) Connect negative (-) terminal cable to the battery, and wait at least for 2 seconds.

CHECK:

(a) Turn the ignition switch to ON and wait at least for 20 seconds.

(b) Clear DTC stored in memory (See step 5 on page DI-239).

(c) Turn the ignition switch to LOCK, and wait at least for 20 seconds.

(d) Turn the ignition switch to ON, and wait at least for 20 seconds.

(e) Check DTC (See page DI-239).

OK:

DTC B0107/51 is not output.

HINT:

Codes other than code B0107/51 may be output at this time, but they are not relevant to this check.

NG → **Replace airbag sensor assembly.**

OK

4	Check P squib.

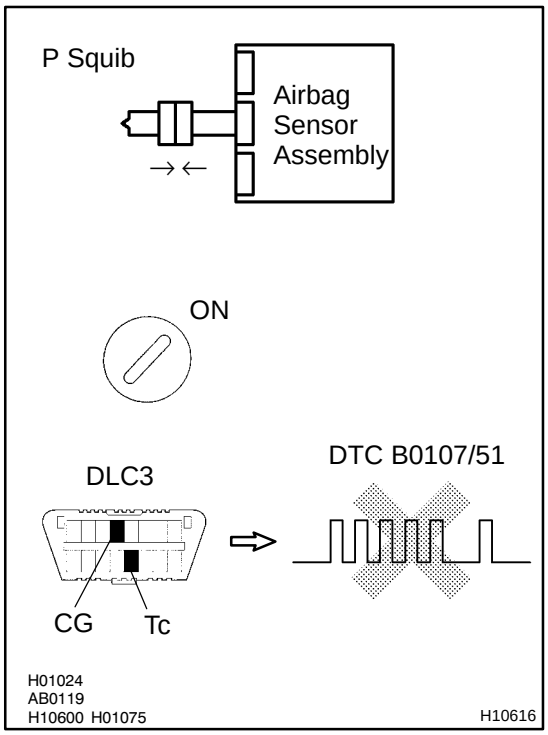

PREPARATION:

(a) Turn the ignition switch to LOCK.
(b) Disconnect negative (-) terminal cable from the battery, and wait at least for 90 seconds.
(c) Connect the front passenger airbag assembly connector.
(d) Connect negative (-) terminal cable to the battery, and wait at least for 2 seconds.

CHECK:

(a) Turn the ignition switch to ON, and wait at least for 20 seconds.
(b) Clear DTC stored in memory (See step 5 on page DI-239).
(c) Turn the ignition switch to LOCK, and wait at least for 20 seconds.
(d) Turn the ignition switch to ON, and wait at least for 20 seconds.
(e) Check DTC (See page DI-239).

OK:

DTC B0107/51 is not output.

HINT:

Codes other than code B0107/51 may be output at this time, but they are not relevant to this check.

NG	Replace front passenger airbag assembly.

OK

From the results of the above inspection, the malfunctioning part can now be considered normal. To make sure of this, use the simulation method to check. If the malfunctioning part can not be detected by the simulation method, replace all SRS components including the wire harness.

DI1B9-27

DTC	B0108/52	Short in P Squib Circuit (to B+)

CIRCUIT DESCRIPTION

The P squib circuit consists of the airbag sensor assembly and front passenger airbag assembly.
It causes the SRS to deploy when the SRS deployment conditions are satisfied.
For details of the function of each component, see OPERATION on page RS-2 .
DTC B0108/52 is recorded when a B+ short is detected in the P squib circuit.

DTC No.	DTC Detecting Condition	Trouble Area
B0108/52	• Short circuit in P squib wire harness (to B+) • P squib malfunction • Airbag sensor assembly malfunction	• Front passenger airbag assembly (P squib) • Airbag sensor assembly • Wire harness

WIRING DIAGRAM

See page DI-271 .

INSPECTION PROCEDURE

1	**Prepare for inspection (See step 1 on page DI-390).**

2	**Check P squib circuit.**

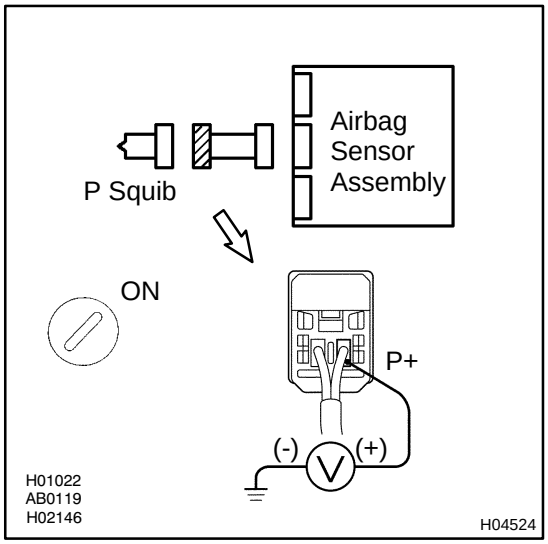

CHECK:

(a) Turn the ignition switch to ON.

(b) For the connector (on the front passenger airbag assembly side) between the front passenger airbag assembly and the airbag sensor assembly, measure the voltage between the P+ and body ground.

OK:

Voltage: 0 V

NG → **Repair or replace harness or connector between front passenger airbag assembly and airbag sensor assembly.**

OK

3	Check airbag sensor assembly.

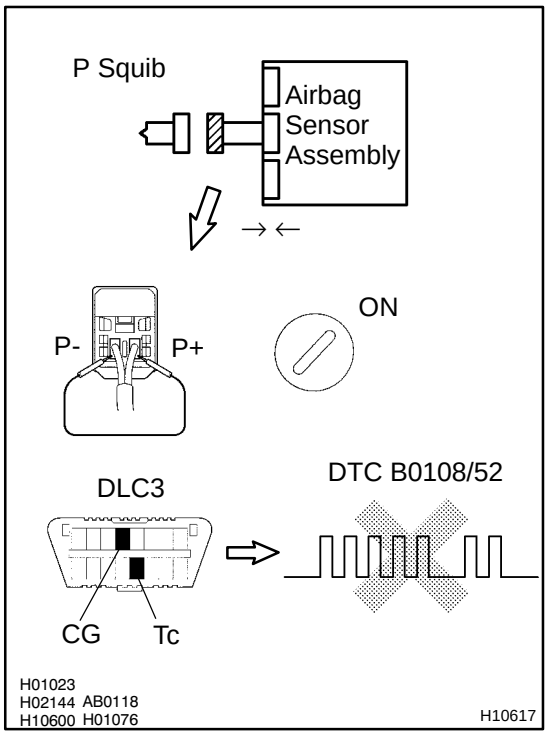

PREPARATION:

(a) Connect the connector to the airbag sensor assembly.

(b) Using a service wire, connect P+ and P- of the connector (on the front passenger airbag assembly side) between the front passenger airbag assembly and the airbag sensor assembly.

(c) Connect negative (-) terminal cable to the battery, and wait at least for 2 seconds.

CHECK:

(a) Turn the ignition switch to ON and wait at least for 20 seconds.

(b) Clear DTC stored in memory (See step 5 on page DI-239).

(c) Turn the ignition switch to LOCK, and wait at least for 20 seconds.

(d) Turn the ignition switch to ON, and wait at least for 20 seconds.

(e) Check DTC (See page DI-239).

OK:

DTC B0108/52 is not output.

HINT:

Codes other than code B0108/52 may be output at this time, but they are not relevant to this check.

NG → **Replace airbag sensor assembly.**

OK

4	Check P squib.

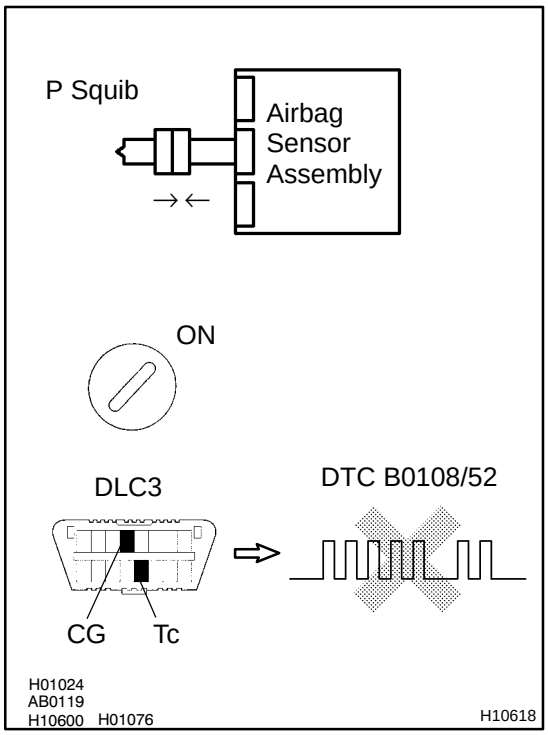

PREPARATION:

(a) Turn the ignition switch to LOCK.
(b) Disconnect negative (-) terminal cable from the battery, and wait at least for 90 seconds.
(c) Connect the front passenger airbag assembly connector.
(d) Connect negative (-) terminal cable to the battery, and wait at least for 2 seconds.

CHECK:

(a) Turn the ignition switch to ON, and wait at least for 20 seconds.
(b) Clear DTC stored in memory (See step 5 on page DI-239).
(c) Turn the ignition switch to LOCK, and wait at least for 20 seconds.
(d) Turn the ignition switch to ON, and wait at least for 20 seconds.
(e) Check DTC (See page DI-239).

OK:

DTC B0108/52 is not output.

HINT:

Codes other than code B0108/52 may be output at this time, but they are not relevant to this check.

NG	Replace front passenger airbag assembly.

OK

From the results of the above inspection, the malfunctioning part can now be considered normal. To make sure of this, use the simulation method to check. If the malfunctioning part can not be detected by the simulation method, replace all SRS components including the wire harness.

DI1NC-18

DTC	B0110/43	Short in Side Squib (RH) Circuit

CIRCUIT DESCRIPTION

The side squib (RH) circuit consists of the airbag sensor assembly and side airbag assembly (RH).
It causes the SRS to deploy when the SRS deployment conditions are satisfied.
For details of the function of each component, see OPERATION on page RS-2 .
DTC B0110/43 is recorded when a short is detected in the side squib (RH) circuit.

DTC No.	DTC Detecting Condition	Trouble Area
B0110/43	• Short circuit between SFR+ wire harness and SFR- wire harness of squib • Side squib (RH) malfunction • Airbag sensor assembly malfunction	• Side airbag assembly (RH) • Airbag sensor assembly • Wire harness

WIRING DIAGRAM

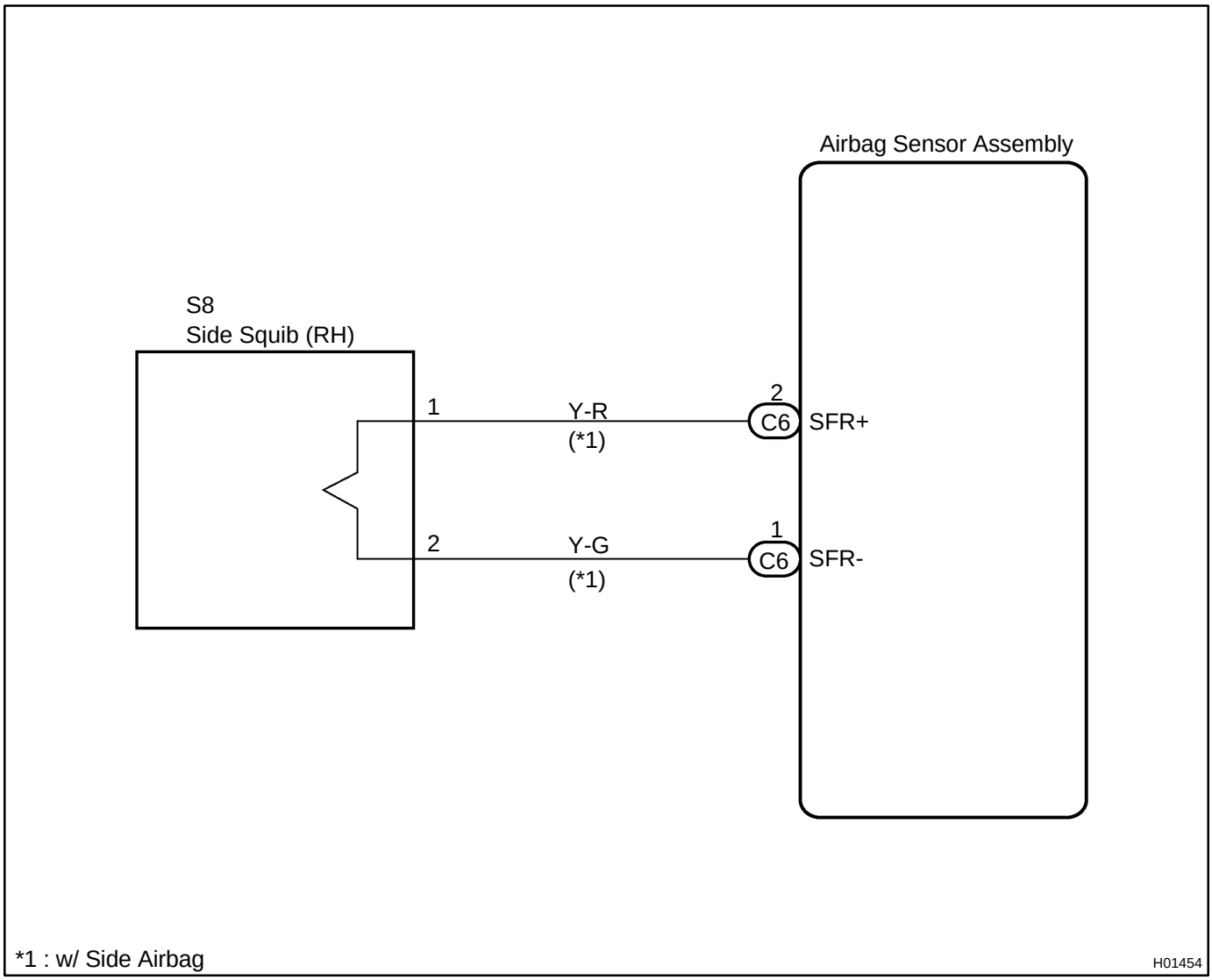

*1 : w/ Side Airbag

H01454

INSPECTION PROCEDURE

1	**Prepare for inspection (See step 1 on page DI-390).**

2	**Check side squib (RH) circuit.**

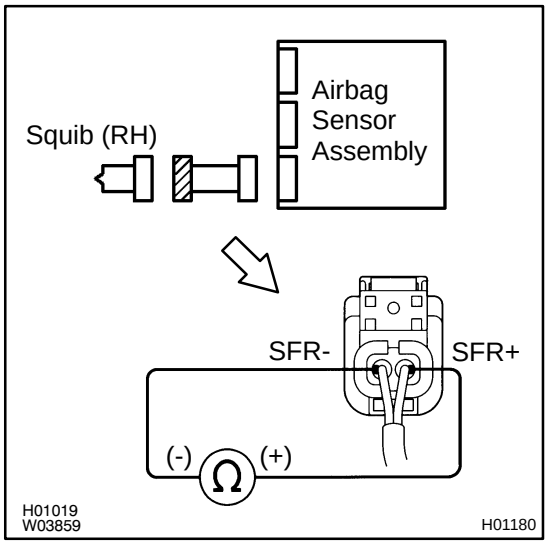

PREPARATION:

Release the airbag activation prevention mechanism of the connector (on the airbag sensor assembly side) between the airbag sensor assembly and the side airbag assembly (RH) (See page DI-239).

CHECK:

For the connector (on the side airbag assembly side) between the side airbag assembly (RH) and the airbag sensor assembly, measure the resistance between SFR+ and SFR-.

OK:

Resistance: 1 MΩ or Higher

NG → **Repair or replace harness or connector between side airbag assembly (RH) and airbag sensor assembly.**

OK

3	Check airbag sensor assembly.

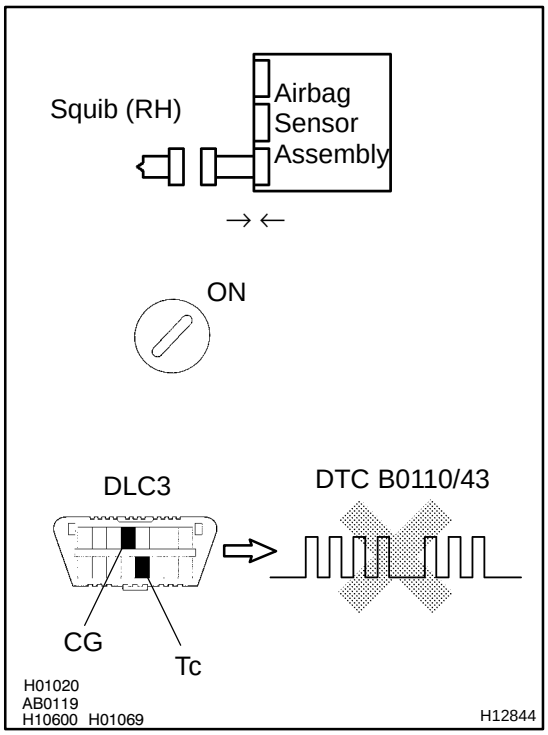

PREPARATION:

(a) Connect the connector to the airbag sensor assembly.
(b) Connect the negative (-) terminal cable to the battery, and wait at least for 2 seconds.

CHECK:

(a) Turn the ignition switch to ON and wait at least for 20 seconds.
(b) Clear the DTC stored in memory (See page DI-239).
(c) Turn the ignition switch to LOCK, and wait at least for 20 seconds.
(d) Turn the ignition switch to ON and wait at least for 20 seconds.
(e) Check the DTC (See page DI-239).

OK:

DTC B0110/43 is not output.

HINT:
Codes other than code B0110/43 may be output at this time, but they are not relevant to this check.

NG → **Replace airbag sensor assembly.**

OK

4	Check side squib (RH).

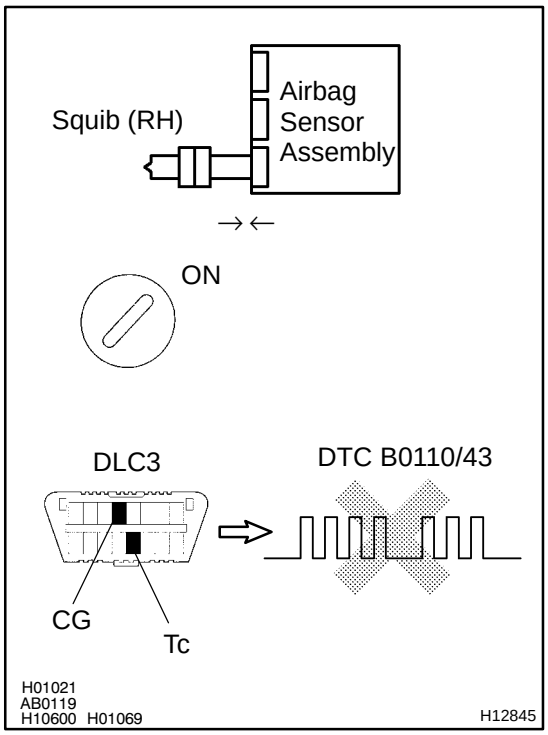

PREPARATION:

(a) Turn the ignition switch to LOCK.
(b) Disconnect the negative (-) terminal cable from the battery, and wait at least for 90 seconds.
(c) Connect the side airbag assembly (RH) connector.
(d) Connect the negative (-) terminal cable to the battery, and wait at least for 2 seconds.

CHECK:

(a) Turn the ignition switch to LOOK, and wait at least for 20 second.
(b) Turn the ignition switch to ON and wait at least for 20 seconds.
(c) Clear the DTC stored in memory (See page DI-239).
(d) Turn the ignition switch to LOCK, and wait at least for 20 seconds.
(e) Turn the ignition switch to ON and wait at least for 20 seconds.
(f) Check the DTC (See page DI-239).

OK:

DTC B0110/43 is not output.

HINT:

Codes other than code B0110/43 may be output at this time, but they are not relevant to this check.

NG	Replace side airbag assembly (RH).

OK

From the results of the above inspection, the malfunctioning part can now be considered normal. To make sure of this, use the simulation method to check.

DTC	B0111/44	Open in Side Squib (RH) Circuit

CIRCUIT DESCRIPTION

The side squib (RH) circuit consists of the airbag sensor assembly and side airbag assembly (RH).
It causes the SRS to deploy when the SRS deployment conditions are satisfied.
For details of the function of each component, see OPERATION on page RS-2 .
DTC B0111/44 is recorded when an open is detected in the side squib (RH) circuit.

DTC No.	DTC Detecting Condition	Trouble Area
B0111/44	• Open circuit in SFR+ wire harness or SFR- wire harness of squib • Side squib (RH) malfunction • Airbag sensor assembly malfunction	• Side airbag assembly (RH) • Airbag sensor assembly • Wire harness

WIRING DIAGRAM

See page DI-284 .

INSPECTION PROCEDURE

1	**Prepare for inspection (See step 1 on page DI-390).**

2	**Check side squib (RH) circuit.**

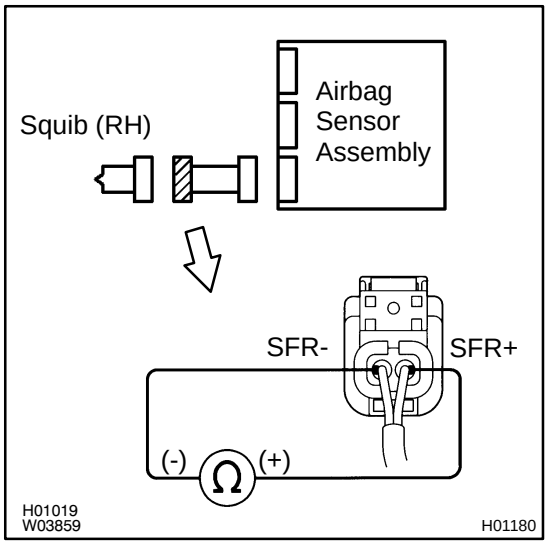

CHECK:

For the connector (on the side airbag assembly side) between the side airbag assembly (RH) and the airbag sensor assembly, measure the resistance between SFR+ and SFR-.

OK:

Resistance: Below 1 Ω

NG → **Repair or replace harness or connector between side airbag assembly (RH) and airbag sensor assembly.**

OK

3	Check airbag sensor assembly.

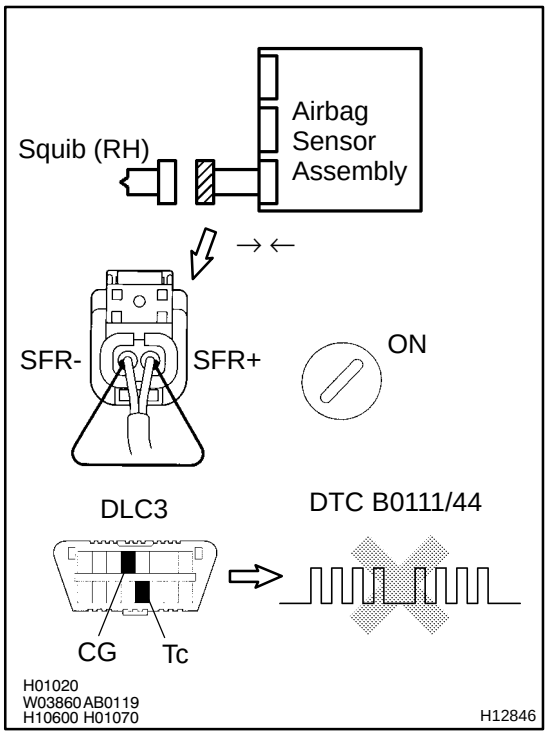

PREPARATION:

(a) Connect the connector to the airbag sensor assembly.

(b) Using a service wire, connect SFR+ and SFR- of the connector (on the side airbag assembly side) between the side airbag assembly (RH) and the airbag sensor assembly.

(c) Connect the negative (-) terminal cable to the battery, and wait at least for 2 seconds.

CHECK:

(a) Turn the ignition switch to ON and wait at least for 20 seconds.

(b) Clear the DTC stored in memory (See page DI-239).

(c) Turn the ignition switch to LOCK, and wait at least for 20 seconds.

(d) Turn the ignition switch to ON and wait at least for 20 seconds.

(e) Check the DTC (See page DI-239).

OK:

DTC B0111/44 is not output.

HINT:

Codes other than code B0111/44 may be output at this time, but they are not relevant to this check.

NG → **Replace airbag sensor assembly.**

OK

4	Check side squib (RH).

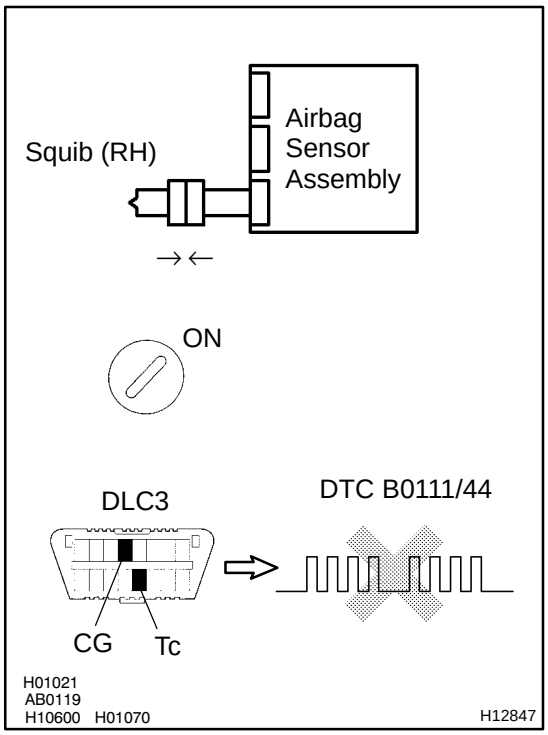

PREPARATION:

(a) Turn the ignition switch to LOCK.
(b) Disconnect the negative (-) terminal cable from the battery, and wait at least for 90 seconds.
(c) Connect the side airbag assembly (RH) connector.
(d) Connect the negative (-) terminal cable to the battery, and wait at least for 2 seconds.

CHECK:

(a) Turn the ignition switch to ON and wait at least for 20 seconds.
(b) Clear the DTC stored in memory (See page DI-239).
(c) Turn the ignition switch to LOCK, and wait at least for 20 seconds.
(d) Turn the ignition switch to ON and wait at least for 20 seconds.
(e) Check the DTC (See page DI-239).

OK:

DTC B0111/44 is not output.

HINT:

Codes other than code B0111/44 may be output at this time, but they are not relevant to this check.

NG → **Replace side airbag assembly (RH).**

OK

From the results of the above inspection, the malfunctioning part can now be considered normal. To make sure of this, use the simulation method to check.

DTC	B0112/41	Short in Side Squib (RH) Circuit (to Ground)

CIRCUIT DESCRIPTION

The side squib (RH) circuit consists of the airbag sensor assembly and side airbag assembly (RH).
It causes the SRS to deploy when the SRS deployment conditions are satisfied.
For details of the function of each component, see OPERATION on page RS-2 .
DTC B0112/41 is recorded when a ground short is detected in the side squib (RH) circuit.

DTC No.	DTC Detecting Condition	Trouble Area
B0112/41	• Short circuit in side squib (RH) wire harness (to ground) • Side squib (RH) malfunction • Airbag sensor assembly malfunction	• Side airbag assembly (RH) • Airbag sensor assembly • Wire harness

WIRING DIAGRAM

See page DI-284 .

INSPECTION PROCEDURE

1	**Prepare for inspection (See step 1 on page DI-390).**

2	**Check side squib (RH) circuit.**

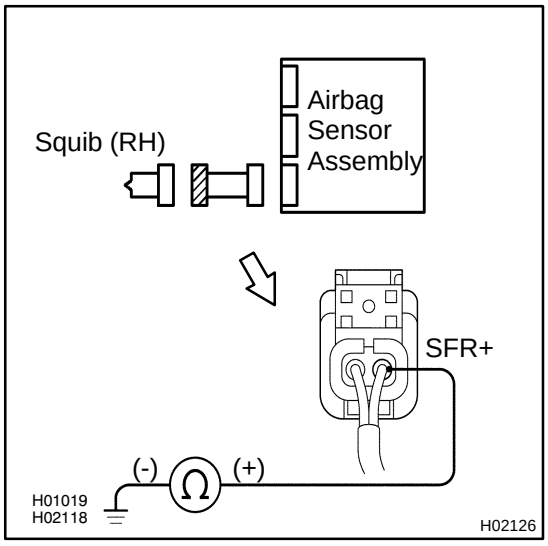

CHECK:

For the connector (on the side airbag assembly side) between the side airbag assembly (RH) and the airbag sensor assembly, measure the resistance between SFR+ and body ground.

OK:

Resistance: 1 MΩ or Higher

NG	**Repair or replace harness or connector between side airbag assembly (RH) and airbag sensor assembly.**

OK

3	Check airbag sensor assembly.

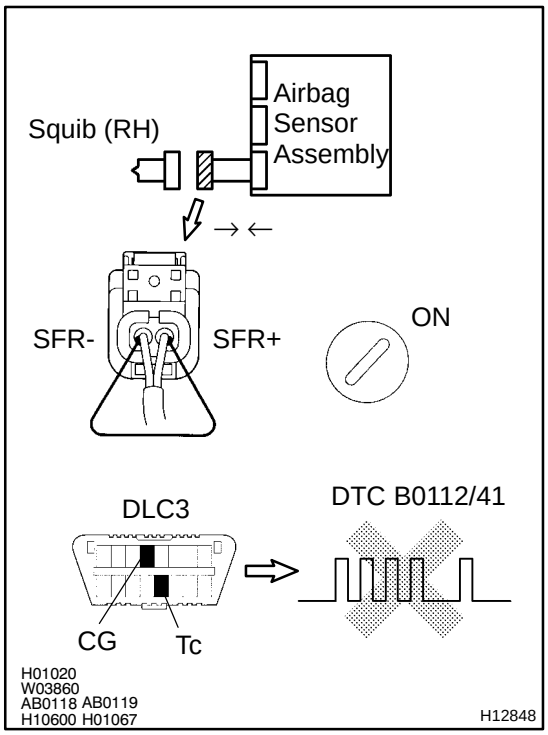

PREPARATION:

(a) Connect the connector to the airbag sensor assembly.

(b) Using a service wire, connect SFR+ and SFR- of the connector (on the side airbag assembly side) between the side airbag assembly (RH) and the airbag sensor assembly.

(c) Connect the negative (-) terminal cable to the battery, and wait at least for 2 seconds.

CHECK:

(a) Turn the ignition switch to ON and wait at least for 20 seconds.

(b) Clear the DTC stored in memory (See step 5 on page DI-239).

(c) Turn the ignition switch to LOCK, and wait at least for 20 seconds.

(d) Turn the ignition switch to ON and wait at least for 20 seconds.

(e) Check the DTC (See page DI-239).

OK:

DTC B0112/41 is not output.

HINT:

Codes other than code B0112/41 may be output at this time, but they are not relevant to this check.

NG	Replace airbag sensor assembly.

OK

4	Check side squib (RH).

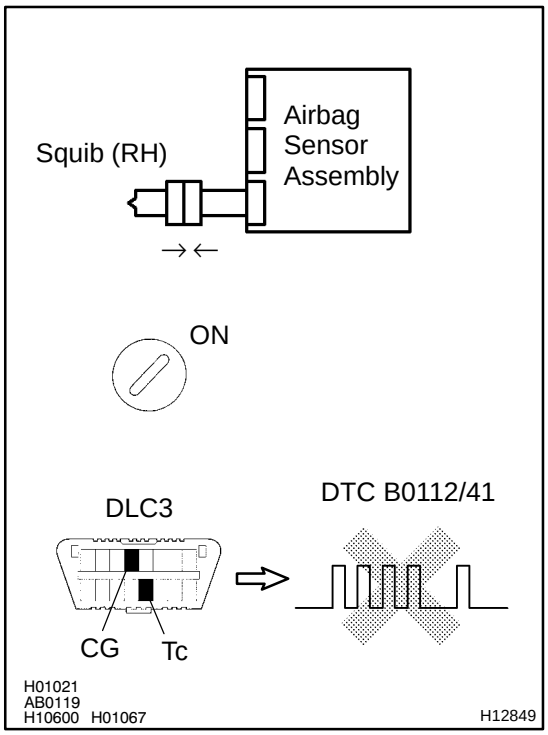

PREPARATION:

(a) Turn the ignition switch to LOCK.
(b) Disconnect the negative (-) terminal cable from the battery, and wait at least for 90 seconds.
(c) Connect the side airbag assembly (RH) connector.
(d) Connect the negative (-) terminal cable to the battery, and wait at least for 2 seconds.

CHECK:

(a) Turn the ignition switch to ON and wait at least for 20 seconds.
(b) Clear the DTC stored in memory (See step 5 on page DI-239).
(c) Turn the ignition switch to LOCK, and wait at least for 20 seconds.
(d) Turn the ignition switch to ON and wait at least for 20 seconds.
(e) Check the DTC (See page DI-239).

OK:

DTC B0112/41 is not output.

HINT:

Codes other than code B0112/41 may be output at this time, but they are not relevant to this check.

NG	Replace side airbag assembly (RH).

OK

From the results of the above inspection, the malfunctioning part can now be considered normal. To make sure of this, use the simulation method to check. If the malfunctioning part can not be detected by the simulation method, replace all SRS components including the wire harness.

DI1NF-15

DTC	B0113/42	Short in Side Squib (RH) Circuit (to B+)

CIRCUIT DESCRIPTION

The side squib (RH) circuit consists of the airbag sensor assembly and side airbag assembly (RH).
It causes the SRS to deploy when the SRS deployment conditions are satisfied.
For details of the function of each component, see OPERATION on page RS-2 .
DTC B0113/42 is recorded when a B+ short is detected in the side squib (RH) circuit.

DTC No.	DTC Detecting Condition	Trouble Area
B0113/42	• Short circuit in side squib (RH) wire harness (to B+) • Side squib (RH) malfunction • Airbag sensor assembly malfunction	• Side airbag assembly (RH) • Airbag sensor assembly • Wire harness

WIRING DIAGRAM

See page DI-284 .

INSPECTION PROCEDURE

1	**Prepare for inspection (See step 1 on page DI-390).**

2	**Check side squib (RH) circuit.**

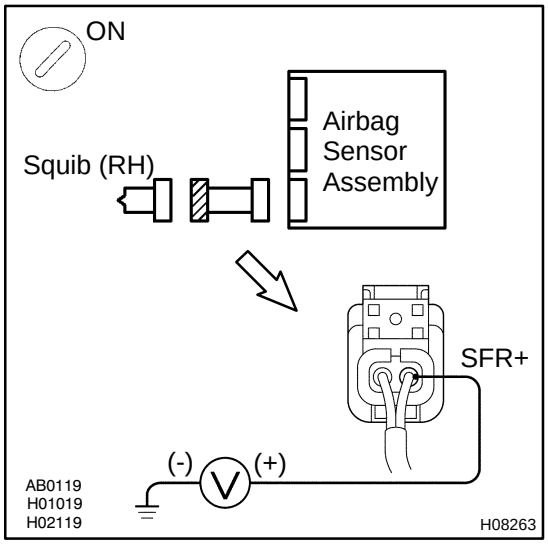

CHECK:

(a) Turn the ignition switch to ON.

(b) For the connector (on the airbag sensor assembly side) between the side airbag assembly (RH) and the airbag sensor assembly, measure the voltage between SFR+ and body ground.

OK:

Voltage: 0 V

NG → **Repair or replace harness or connector between side airbag assembly (RH) and airbag sensor assembly.**

OK

3	Check airbag sensor assembly.

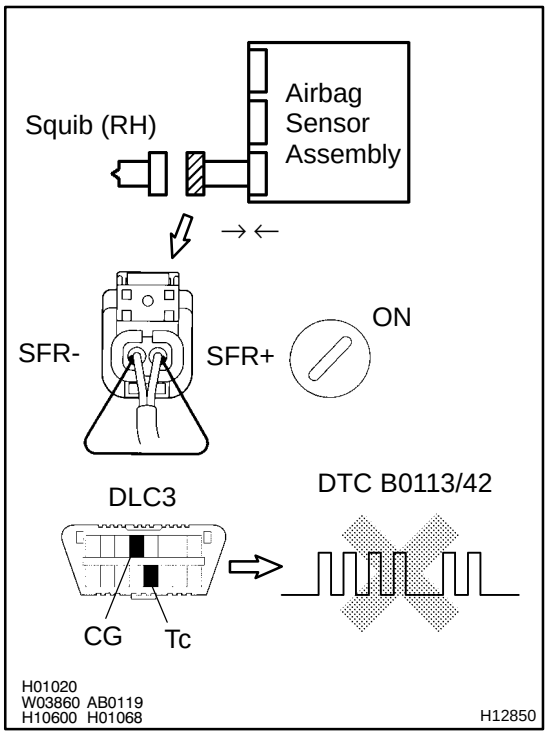

PREPARATION:

(a) Connect the connector to the airbag sensor assembly.

(b) Using a service wire, connect SFR+ and SFR- of the connector (on the side airbag assembly side) between the side airbag assembly (RH) and the airbag sensor assembly.

(c) Connect the negative (-) terminal cable to the battery, and wait at least for 2 seconds.

CHECK:

(a) Turn the ignition switch to ON and wait at least for 20 seconds.

(b) Clear the DTC stored in memory (See step 5 on page DI-239).

(c) Turn the ignition switch to LOCK, and wait at least for 20 seconds.

(d) Turn the ignition switch to ON and wait at least for 20 seconds.

(e) Check the DTC (See page DI-239).

OK:

DTC B0113/42 is not output.

HINT:

Codes other than code B0113/42 may be output at this time, but they are not relevant to this check.

NG → **Replace airbag sensor assembly.**

OK

4	Check side squib (RH).

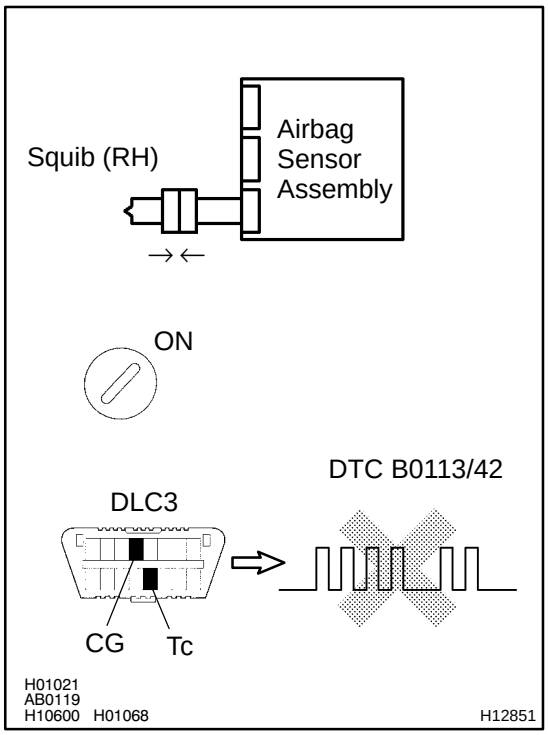

PREPARATION:

(a) Turn the ignition switch to LOCK.
(b) Disconnect the negative (-) terminal cable from the battery, and wait at least for 90 seconds.
(c) Connect the side airbag assembly (RH) connector.
(d) Connect the negative (-) terminal cable to the battery, and wait at least for 2 seconds.

CHECK:

(a) Turn the ignition switch to ON and wait at least for 20 seconds.
(b) Clear the DTC stored in memory (See step 5 on page DI-239).
(c) Turn the ignition switch to LOCK, and wait at least for 20 seconds.
(d) Turn the ignition switch to ON and wait at least for 20 seconds.
(e) Check the DTC (See page DI-239).

OK:

DTC B0113/42 is not output.

HINT:
Codes other than code B0113/42 may be output at this time, but they are not relevant to this check.

NG	Replace side airbag assembly (RH).

OK

From the results of the above inspection, the malfunctioning part can now be considered normal. To make sure of this, use the simulation method to check. If the malfunctioning part can not be detected by the simulation method, replace all SRS components including the wire harness.

DI1NG-18

DTC	B0115/47	Short in Side Squib (LH) Circuit

CIRCUIT DESCRIPTION

The side squib (LH) circuit consists of the airbag sensor assembly and side airbag assembly (LH).
It causes the SRS to deploy when the SRS deployment conditions are satisfied.
For details of the function of each component, see OPERATION on page RS-2 .
DTC B0115/47 is recorded when a short is detected in the side squib (LH) circuit.

DTC No.	DTC Detecting Condition	Trouble Area
B0115/47	• Short circuit between SFL+ wire harness and SFL- wire harness of squib • Side squib (LH) malfunction • Airbag sensor assembly malfunction	• Side airbag assembly (LH) • Airbag sensor assembly • Wire harness

WIRING DIAGRAM

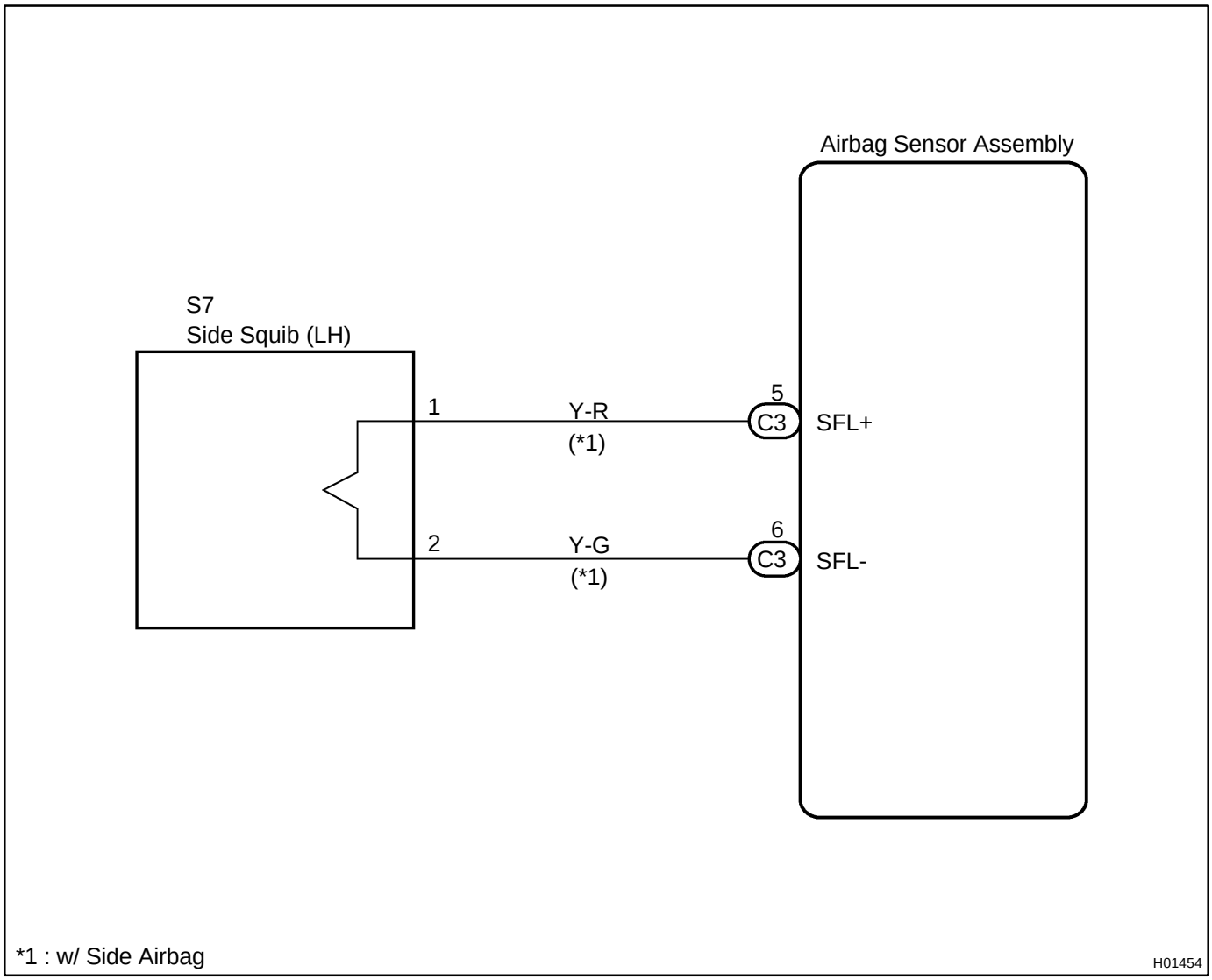

*1 : w/ Side Airbag

H01454

INSPECTION PROCEDURE

1	**Prepare for inspection (See step 1 on page DI-390).**

2	**Check side squib (LH) circuit.**

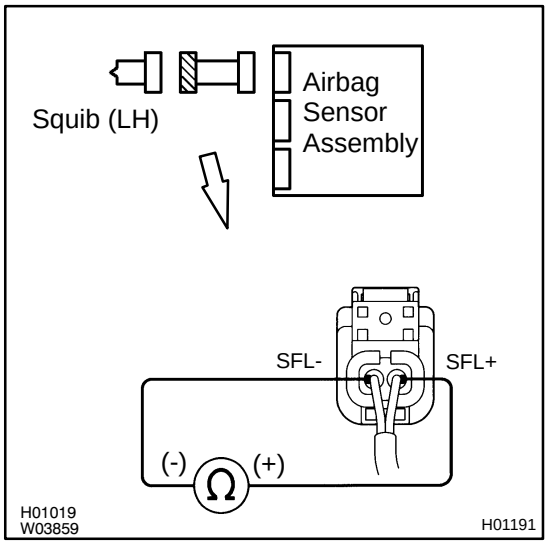

PREPARATION:

Release the airbag activation prevention mechanism of the connector (on the airbag sensor assembly side) between the airbag sensor assembly and the side airbag assembly (LH) (See page DI-239).

CHECK:

For the connector (on the side airbag assembly side) between the side airbag assembly (LH) and the airbag sensor assembly, measure the resistance between SFL+ and SFL-.

OK:

Resistance: 1 MΩ or Higher

NG → **Repair or replace harness or connector between side airbag assembly (LH) and airbag sensor assembly.**

OK

3	Check airbag sensor assembly.

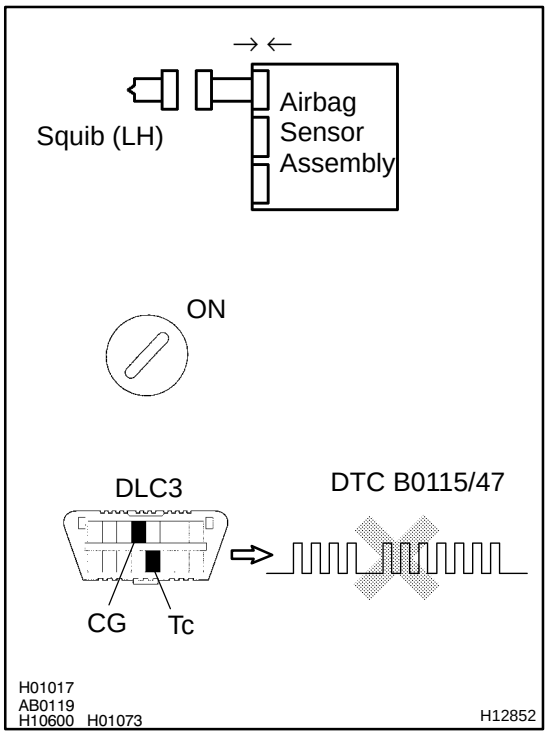

PREPARATION:

(a) Connect the connector to the airbag sensor assembly.
(b) Connect the negative (-) terminal cable to the battery, and wait at least for 2 seconds.

CHECK:

(a) Turn the ignition switch to ON and wait at least for 20 seconds.
(b) Clear the DTC stored in memory (See page DI-239).
(c) Turn the ignition switch to LOCK, and wait at least for 20 seconds.
(d) Turn the ignition switch to ON and wait at least for 20 seconds.
(e) Check the DTC (See page DI-239).

OK:

DTC B0115/47 is not output.

HINT:
Codes other than code B0115/47 may be output at this time, but they are not relevant to this check.

NG → **Replace airbag sensor assembly.**

OK

4	Check side squib (LH).

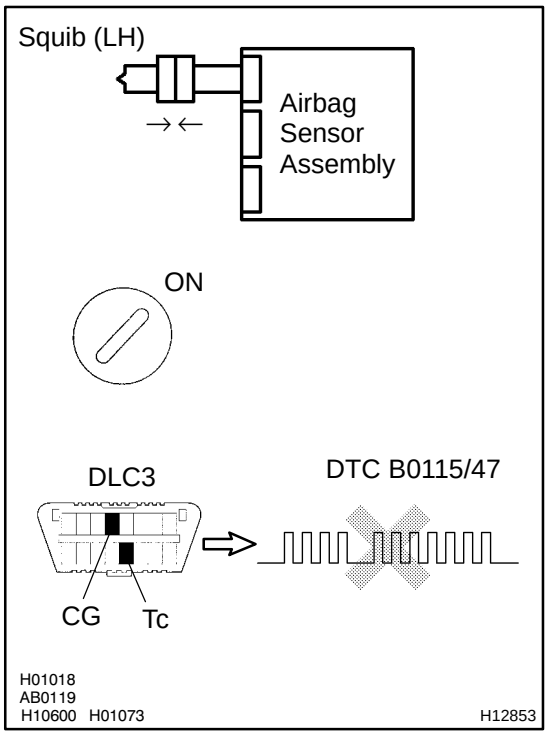

PREPARATION:

(a) Turn the ignition switch to LOCK.
(b) Disconnect the negative (-) terminal cable from the battery, and wait at least for 90 seconds.
(c) Connect the side airbag assembly (LH) connector.
(d) Connect the negative (-) terminal cable to the battery, and wait at least for 2 seconds.

CHECK:

(a) Turn the ignition switch to LOOK, and wait at least for 20 second.
(b) Turn the ignition switch to ON and wait at least for 20 seconds.
(c) Clear the DTC stored in memory (See page DI-239).
(d) Turn the ignition switch to LOCK, and wait at least for 20 seconds.
(e) Turn the ignition switch to ON and wait at least for 20 seconds.
(f) Check the DTC (See page DI-239).

OK:

DTC B0115/47 is not output.

HINT:

Codes other than code B0115/47 may be output at this time, but they are not relevant to this check.

NG → **Replace side airbag assembly (LH).**

OK

From the results of the above inspection, the malfunctioning part can now be considered normal. To make sure of this, use the simulation method to check.

DI1NH-15

DTC	B0116/48	Open in Side Squib (LH) Circuit

CIRCUIT DESCRIPTION

The side squib (LH) circuit consists of the airbag sensor assembly and side airbag assembly (LH).
It causes the SRS to deploy when the SRS deployment conditions are satisfied.
For details of the function of each component, see OPERATION on page RS-2 .
DTC B0116/48 is recorded when an open is detected in the side squib (LH) circuit.

DTC No.	DTC Detecting Condition	Trouble Area
B0116/48	• Open circuit in SFL+ wire harness or SFL- wire harness of squib • Side squib (LH) malfunction • Airbag sensor assembly malfunction	• Side airbag assembly (LH) • Airbag sensor assembly • Wire harness

WIRING DIAGRAM

See page DI-297 .

INSPECTION PROCEDURE

1	**Prepare for inspection (See step 1 on page DI-390).**

2	**Check side squib (LH) circuit.**

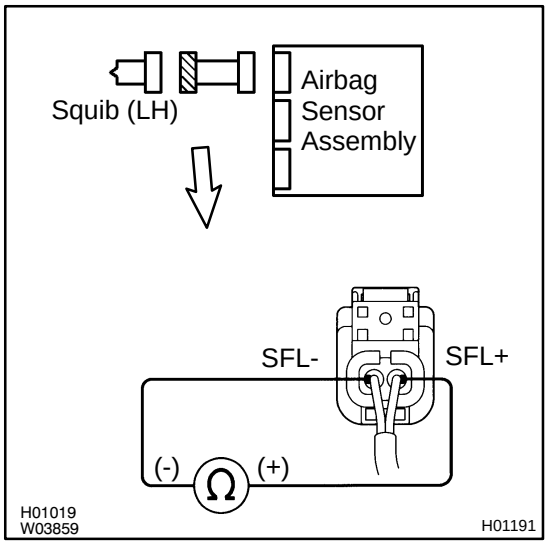

CHECK:

For the connector (on the side airbag assembly side) between the side airbag assembly (LH) and the airbag sensor assembly, measure the resistance between SFL+ and SFL-.

OK:

Resistance: Below 1 Ω

NG → **Repair or replace harness or connector between side airbag assembly (LH) and airbag sensor assembly.**

OK

3	Check airbag sensor assembly.

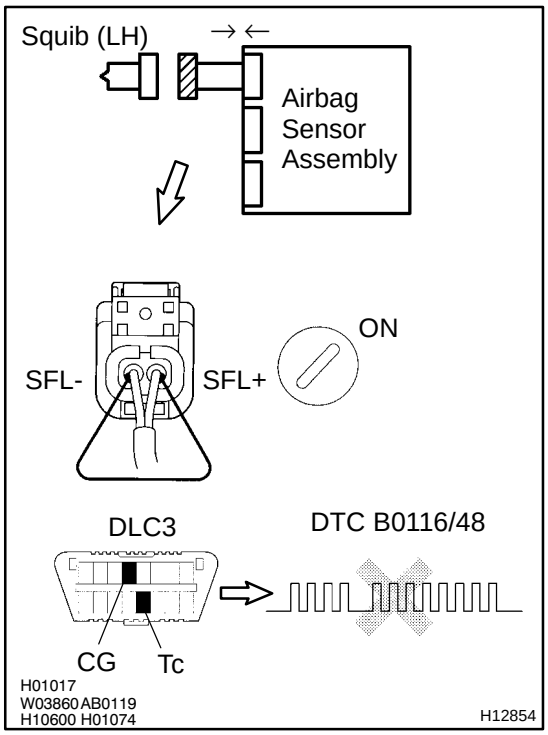

PREPARATION:

(a) Connect the connector to the airbag sensor assembly.

(b) Using a service wire, connect SFL+ and SFL- of the connector (on the side airbag assembly side) between the side airbag assembly (LH) and the airbag sensor assembly.

(c) Connect the negative (-) terminal cable to the battery, and wait at least 2 seconds.

CHECK:

(a) Turn the ignition switch to ON and wait at least for 20 seconds.

(b) Clear the DTC stored in memory (See page DI-239).

(c) Turn the ignition switch to LOCK, and wait at least for 20 seconds.

(d) Turn the ignition switch to ON and wait at least for 20 seconds.

(e) Check the DTC (See page DI-239).

OK:

DTC B0116/48 is not output.

HINT:

Codes other than code B0116/48 may be output at this time, but they are not relevant to this check.

NG → **Replace airbag sensor assembly.**

OK

4	Check side squib (LH).

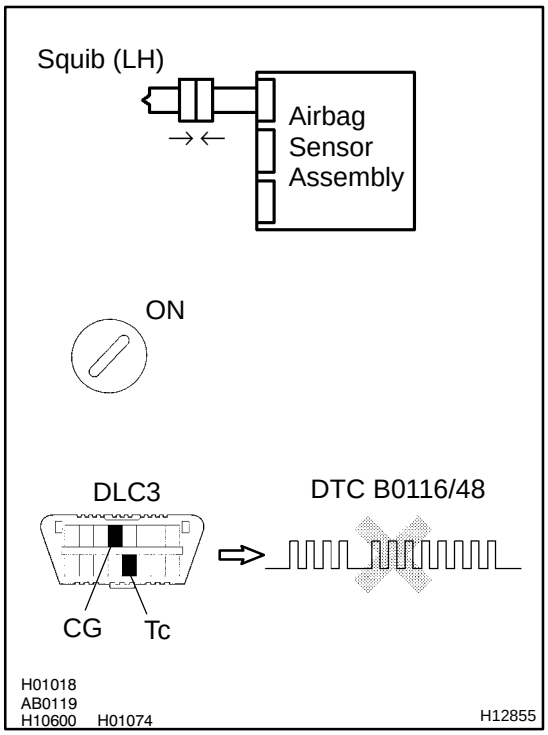

PREPARATION:

(a) Turn the ignition switch to LOCK.
(b) Disconnect negative (-) terminal cable from the battery, and wait at least for 90 seconds.
(c) Connect the side airbag assembly (LH) connector.
(d) Connect the negative (-) terminal cable to the battery, and wait at least for 2 seconds.

CHECK:

(a) Turn the ignition switch to ON and wait at least for 20 seconds.
(b) Clear the DTC stored in memory (See page DI-239).
(c) Turn the ignition switch to LOCK, and wait at least for 20 seconds.
(d) Turn the ignition switch to ON and wait at least for 20 seconds.
(e) Check the DTC (See page DI-239).

OK:

DTC B0116/48 is not output.

HINT:

Codes other than code B0116/48 may be output at this time, but they are not relevant to this check.

NG → **Replace side airbag assembly (LH).**

OK

From the results of the above inspection, the malfunctioning part can now be considered normal. To make sure of this, use the simulation method to check.

DTC	B0117/45	Short in Side Squib (LH) Circuit (to Ground)

CIRCUIT DESCRIPTION

The side squib (LH) circuit consists of the airbag sensor assembly and side airbag assembly (LH).
It causes the SRS to deploy when the SRS deployment conditions are satisfied.
For details of the function of each component, see OPERATION on page RS-2 .
DTC B0117/45 is recorded when a ground short is detected in the side squib (LH) circuit.

DTC No.	DTC Detecting Condition	Trouble Area
B0117/45	• Short circuit in side squib (LH) wire harness (to ground) • Side squib (LH) malfunction • Airbag sensor assembly malfunction	• Side airbag assembly (LH) • Airbag sensor assembly • Wire harness

WIRING DIAGRAM

See page DI-297 .

INSPECTION PROCEDURE

1	**Prepare for inspection (See step 1 on page DI-390).**

2	**Check side squib (LH) circuit.**

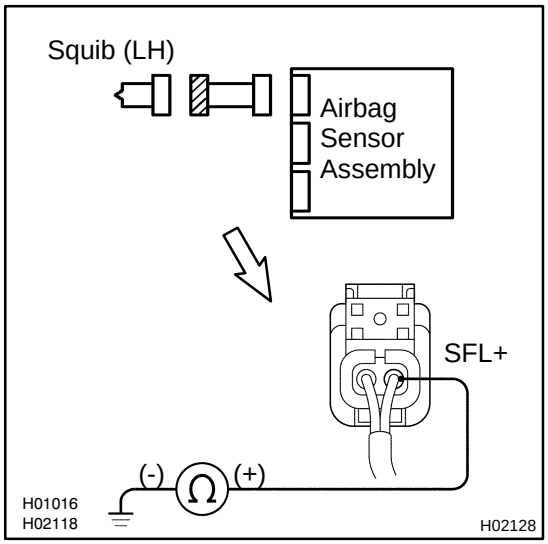

CHECK:

For the connector (on the side airbag assembly side) between the side airbag assembly (LH) and the airbag sensor assembly, measure the resistance between SFL+ and body ground.

OK:

Resistance: 1 MΩ or Higher

NG → **Repair or replace harness or connector between side airbag assembly (LH) and airbag sensor assembly.**

OK

3	Check airbag sensor assembly.

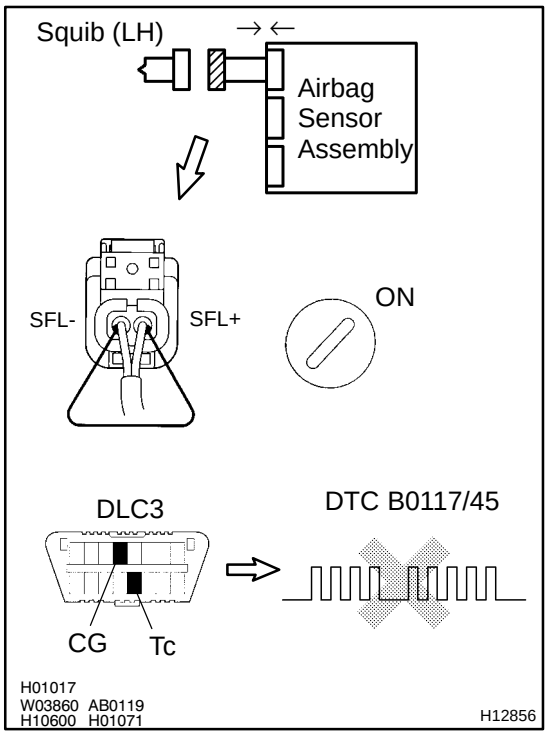

PREPARATION:

(a) Connect the connector to the airbag sensor assembly.

(b) Using a service wire, connect SFL+ and SFL- of the connector (on the side airbag assembly side) between the side airbag assembly (LH) and the airbag sensor assembly.

(c) Connect the negative (-) terminal cable to the battery, and wait at least for 2 seconds.

CHECK:

(a) Turn the ignition switch to ON and wait at least for 20 seconds.

(b) Clear the DTC stored in memory (See step 5 on page DI-239).

(c) Turn the ignition switch to LOCK, and wait at least for 20 seconds.

(d) Turn the ignition switch to ON and wait at least for 20 seconds.

(e) Check the DTC (See page DI-239).

OK:

DTC B0117/45 is not output.

HINT:

Codes other than code B0117/45 may be output at this time, but they are not relevant to this check.

NG → **Replace airbag sensor assembly.**

OK

4	Check side squib (LH).

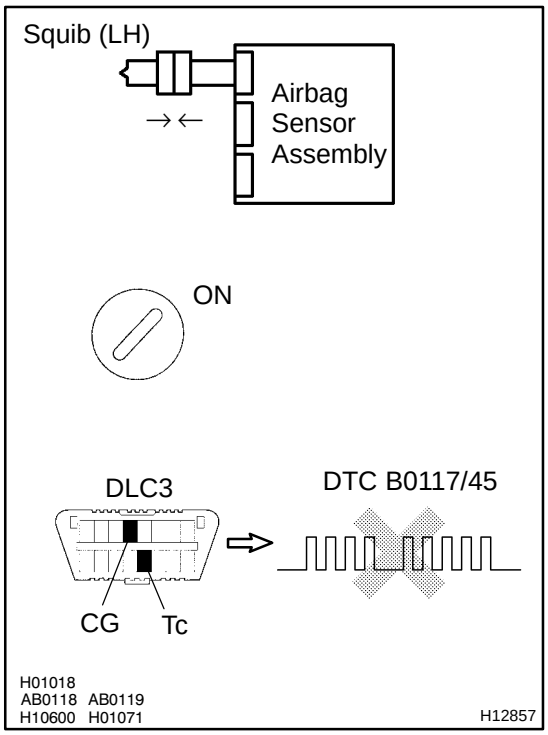

PREPARATION:

(a) Turn the ignition switch to LOCK.
(b) Disconnect the negative (-) terminal cable from the battery, and wait at least for 90 seconds.
(c) Connect the side airbag assembly (LH) connector.
(d) Connect the negative (-) terminal cable to the battery, and wait at least for 2 seconds.

CHECK:

(a) Turn the ignition switch to ON and wait at least for 20 seconds.
(b) Clear the DTC stored in memory (See step 5 on page DI-239).
(c) Turn the ignition switch to LOCK, and wait at least for 20 seconds.
(d) Turn the ignition switch to ON and wait at least for 20 seconds.
(e) Check the DTC (See page DI-239).

OK:

DTC B0117/45 is not output.

HINT:
Codes other than code B0117/45 may be output at this time, but they are not relevant to this check.

NG	Replace side airbag assembly (LH).

OK

From the results of the above inspection, the malfunctioning part can now be considered normal. To make sure of this, use the simulation method to check. If the malfunctioning part can not be detected by the simulation method, replace all SRS components including the wire harness.

DI1NJ-14

DTC	B0118/46	Short in Side Squib (LH) Circuit (to B+)

CIRCUIT DESCRIPTION

The side squib (LH) circuit consists of the airbag sensor assembly and side airbag assembly (LH).
It causes the SRS to deploy when the SRS deployment conditions are satisfied.
For details of the function of each component, see OPERATION on page RS-2 .
DTC B0118/46 is recorded when a B+ short is detected in the side squib (LH) circuit.

DTC No.	DTC Detecting Condition	Trouble Area
B0118/46	• Short circuit in side squib (LH) wire harness (to B+) • Side squib (LH) malfunction • Airbag sensor assembly malfunction	• Side airbag assembly (LH) • Airbag sensor assembly • Wire harness

WIRING DIAGRAM

See page DI-297 .

INSPECTION PROCEDURE

1	**Prepare for inspection (See step 1 on page DI-390).**

2	**Check side squib (LH) circuit.**

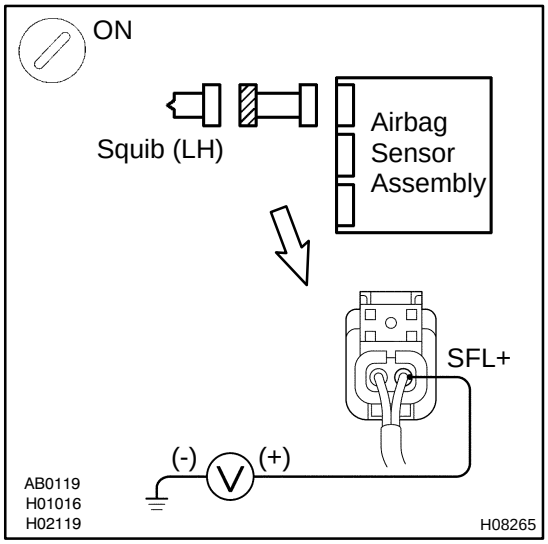

CHECK:

(a) Turn the ignition switch to ON.

(b) For the connector (on the side airbag assembly side) between the side airbag assembly (LH) and the airbag sensor assembly, measure the voltage between SFL+ and body ground.

OK:

Voltage: 0 V

NG → **Repair or replace harness or connector between side airbag assembly (LH) and airbag sensor assembly.**

OK

3	Check airbag sensor assembly.

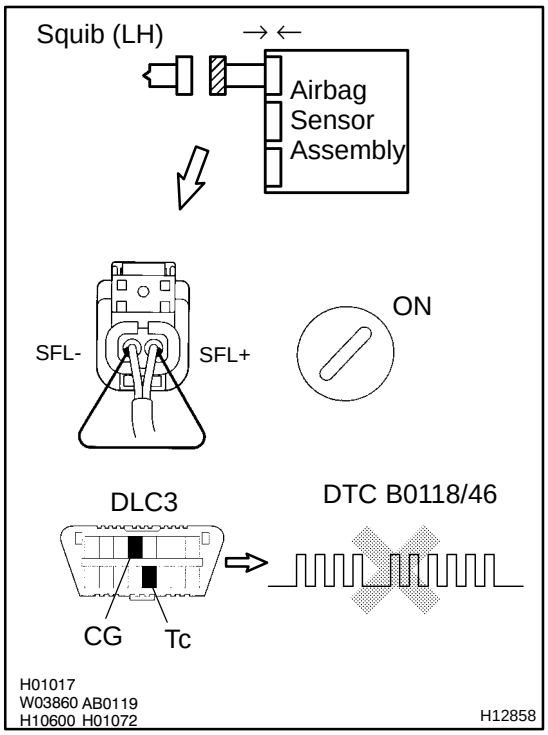

PREPARATION:

(a) Connect the connector to the airbag sensor assembly.

(b) Using a service wire, connect SFL+ and SFL- of the connector (on the side airbag assembly side) between the side airbag assembly (LH) and the airbag sensor assembly.

(c) Connect the negative (-) terminal cable to the battery, and wait at least for 2 seconds.

CHECK:

(a) Turn the ignition switch to ON and wait at least for 20 seconds.

(b) Clear the DTC stored in memory (See step 5 on page DI-239).

(c) Turn the ignition switch to LOCK, and wait at least for 20 seconds.

(d) Turn the ignition switch to ON and wait at least for 20 seconds.

(e) Check the DTC (See page DI-239).

OK:

DTC B0118/46 is not output.

HINT:

Codes other than code B0118/46 may be output at this time, but they are not relevant to this check.

NG → **Replace airbag sensor assembly.**

OK

4	Check side squib (LH).

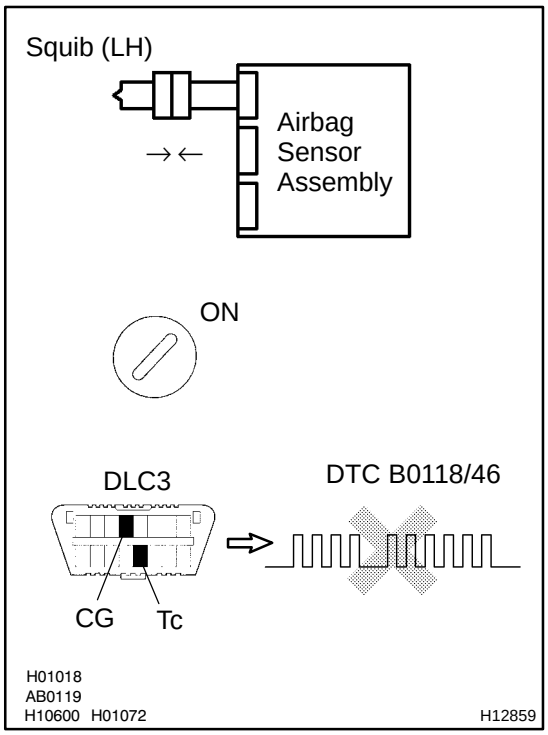

PREPARATION:

(a) Turn the ignition switch to LOCK.
(b) Disconnect the negative (-) terminal cable from the battery, and wait at least for 90 seconds.
(c) Connect the side airbag assembly (LH) connector.
(d) Connect the negative (-) terminal cable to the battery, and wait at least for 2 seconds.

CHECK:

(a) Turn the ignition switch to ON and wait at least for 20 seconds.
(b) Clear the DTC stored in memory (See step 5 on page DI-239).
(c) Turn the ignition switch to LOCK, and wait at least for 20 seconds.
(d) Turn the ignition switch to ON and wait at least for 20 seconds.
(e) Check the DTC (See page DI-239).

OK:

DTC B0118/46 is not output.

HINT:

Codes other than code B0118/46 may be output at this time, but they are not relevant to this check.

NG → **Replace side airbag assembly (LH).**

OK

From the results of the above inspection, the malfunctioning part can now be considered normal. To make sure of this, use the simulation method to check. If the malfunctioning part can not be detected by the simulation method, replace all SRS components including the wire harness.

DI16S-45

DTC	B0130/63	Short in P/T Squib (RH) Circuit

CIRCUIT DESCRIPTION

The P/T squib (RH) circuit consists of the airbag sensor assembly and seat belt pretensioner (RH).
It causes the SRS to deploy when the SRS deployment conditions are satisfied.
For details of the function of each component, see OPERATION on page RS-2 .
DTC B0130/63 is recorded when a short is detected in the P/T squib (RH) circuit.

DTC No.	DTC Detecting Condition	Trouble Area
B0130/63	• Short circuit between PR+ wire harness and PR- wire harness of squib • P/T squib (RH) malfunction • Airbag sensor assembly malfunction	• Seat belt pretensioner (RH) • Airbag sensor assembly • Wire harness

WIRING DIAGRAM

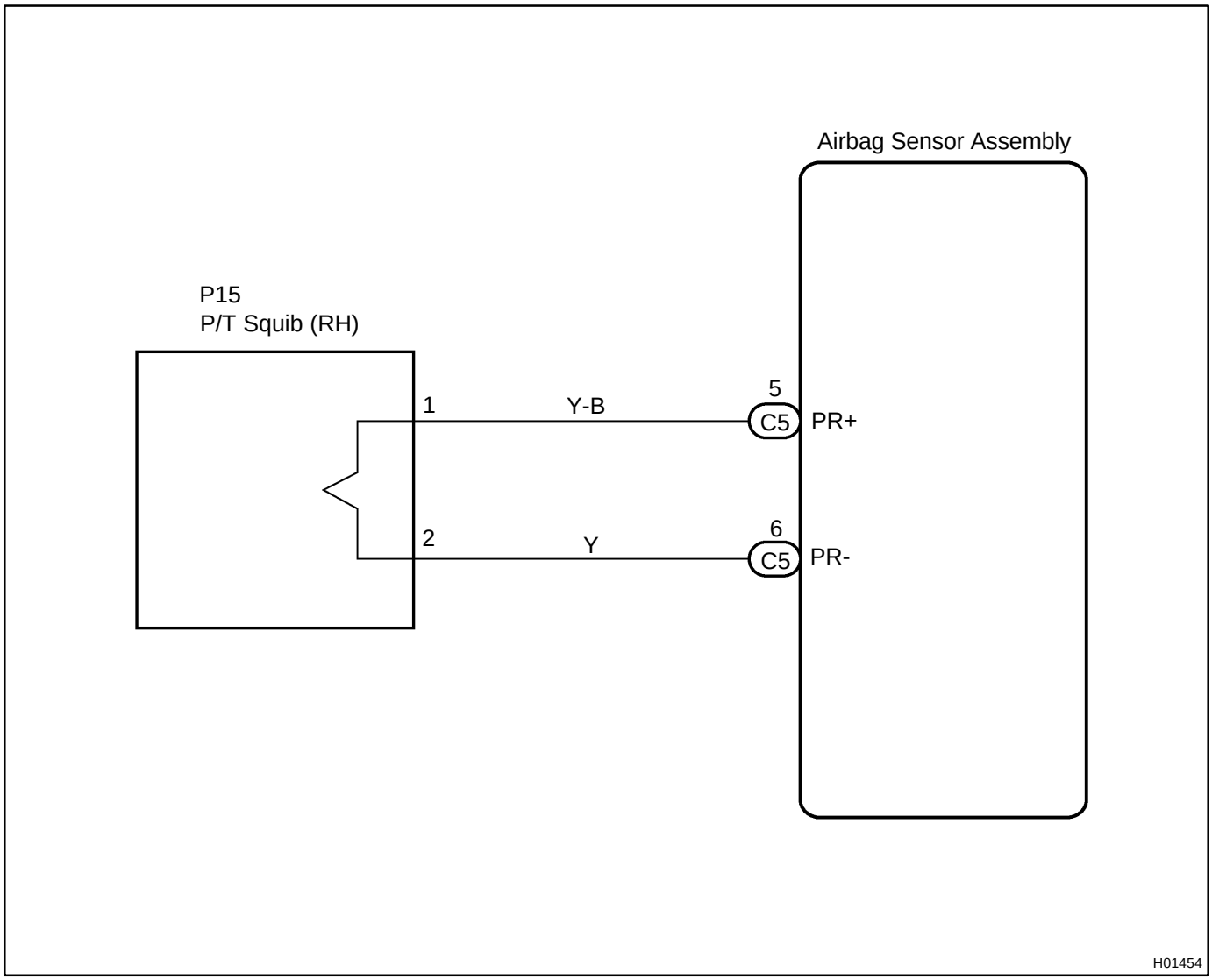

INSPECTION PROCEDURE

1	**Prepare for inspection. (See step 1 on page DI-390)**

2	**Check P/T squib (RH) circuit.**

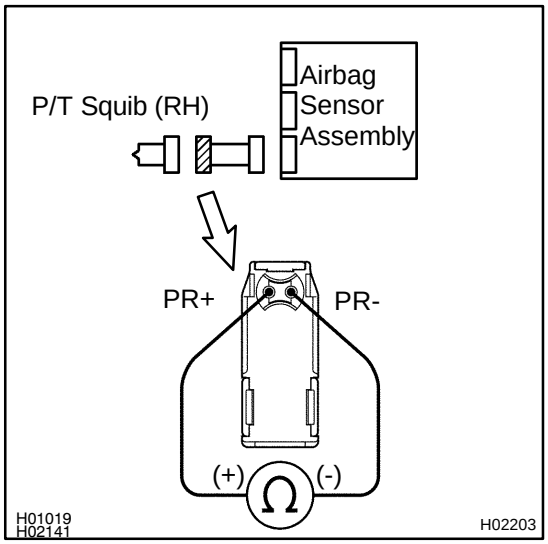

PREPARATION:

Release the airbag activation prevention mechanism of the connector (on the airbag sensor assembly side) between the airbag sensor assembly and the seat belt pretensioner (RH). (See page DI-239)

CHECK:

For the connector (on the seat belt pretensioner side) between the seat belt pretensioner (RH) and the airbag sensor assembly, measure the resistance between PR+ and PR-.

OK:

Resistance: 1 MΩ or Higher

NG → **Repair or replace harness or connector between seat belt pretensioner (RH) and airbag sensor assembly.**

OK

3	Check airbag sensor assembly.

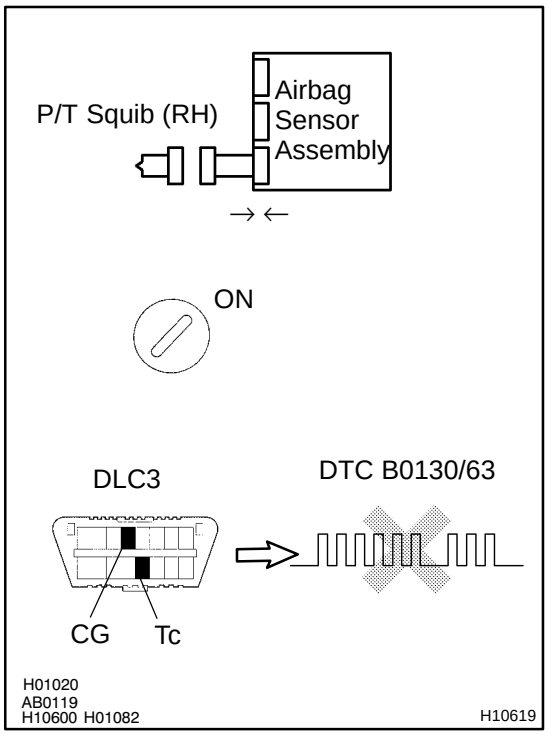

PREPARATION:

(a) Connect the connector to the airbag sensor assembly.
(b) Connect negative (-) terminal cable to the battery, and wait at least for 2 seconds.

CHECK:

(a) Turn the ignition switch to ON and wait at least for 20 seconds.
(b) Clear DTC stored in memory. (See page DI-239)
(c) Turn the ignition switch to LOCK, and wait at least for 20 seconds.
(d) Turn the ignition switch to ON, and wait at least for 20 seconds.
(e) Check DTC. (See page DI-239)

OK:

DTC B0130/63 is not output.

HINT:
Codes other than code B0130/63 may be output at this time, but they are not relevant to this check.

NG → **Replace airbag sensor assembly.**

OK

4	Check P/T squib (RH).

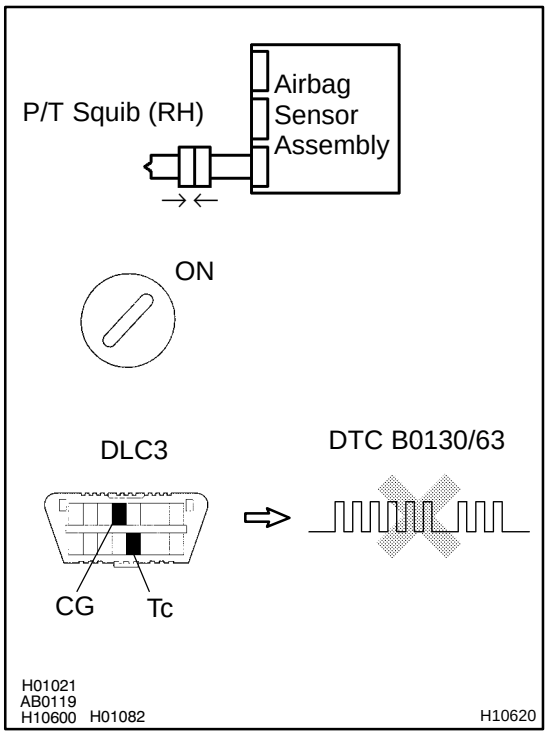

PREPARATION:

(a) Turn the ignition switch to LOCK.
(b) Disconnect negative (-) terminal cable from the battery, and wait at least for 90 seconds.
(c) Connect the seat belt pretensioner (RH) connector.
(d) Connect negative (-) terminal cable to the battery, and wait at least for 2 seconds.

CHECK:

(a) Turn the ignition switch to LOOK, and wait at least for 20 second.
(b) Turn the ignition switch to ON, and wait at least for 20 seconds.
(c) Clear DTC stored in memory. (See page DI-239)
(d) Turn the ignition switch to LOCK, and wait at least for 20 seconds.
(e) Turn the ignition switch to ON, and wait at least for 20 seconds.
(f) Check DTC. (See page DI-239)

OK:

DTC B0130/63 is not output.

HINT:

Codes other than code B0130/63 may be output at this time, but they are not relevant to this check.

NG → **Replace seat belt pretensioner (RH).**

OK

From the results of the above inspection, the malfunctioning part can now be considered normal. To make sure of this, use the simulation method to check.

DI1BG-26

DTC	B0131/64	Open in P/T Squib (RH) Circuit

CIRCUIT DESCRIPTION

The P/T squib circuit (RH) consists of the airbag sensor assembly and seat belt pretensioner (RH).
It causes the SRS to deploy when the SRS deployment conditions are satisfied.
For details of the function of each component, see OPERATION on page RS-2 .
DTC B0131/64 is recorded when an open is detected in the P/T squib (RH) circuit.

DTC No.	DTC Detecting Condition	Trouble Area
B0131/64	• Open circuit in PR+ wire harness or PR- wire harness of squib • P/T squib (RH) malfunction • Airbag sensor assembly malfunction	• Seat belt pretensioner (RH) • Airbag sensor assembly • Wire harness

WIRING DIAGRAM

See page DI-310 .

INSPECTION PROCEDURE

1	**Prepare for inspection. (See step 1 on page DI-390)**

2	**Check P/T squib (RH) circuit.**

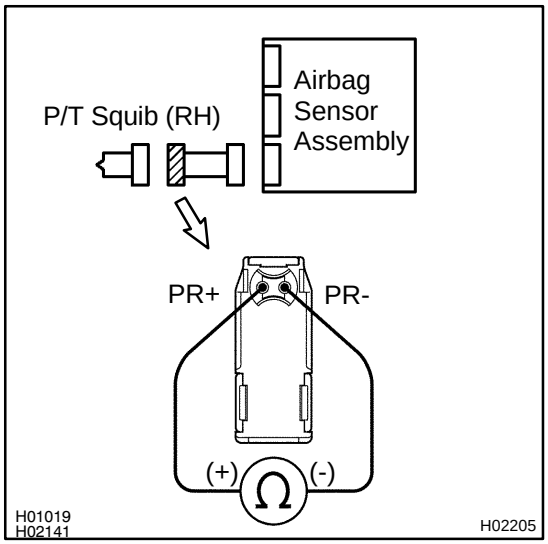

CHECK:

For the connector (on the seat belt pretensioner side) between the seat belt pretensioner (RH) and the airbag sensor assembly, measure the resistance between PR+ and PR-.

OK:

Resistance: Below 1 Ω

NG → **Repair or replace harness or connector between seat belt pretensioner (RH) and airbag sensor assembly.**

OK

3	Check airbag sensor assembly.

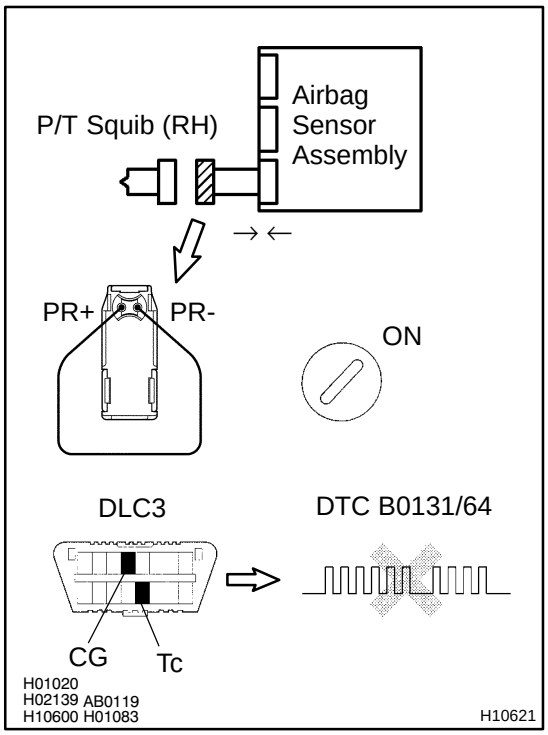

PREPARATION:

(a) Connect the connector to the airbag sensor assembly.

(b) Using a service wire, connect PR+ and PR- of the connector (on the seat belt pretensioner side) between the seat belt pretensioner (RH) and the airbag sensor assembly.

(c) Connect negative (-) terminal cable to the battery, and wait at least for 2 seconds.

CHECK:

(a) Turn the ignition switch to ON and wait at least for 20 seconds.

(b) Clear DTC stored in memory. (See page DI-239)

(c) Turn the ignition switch to LOCK, and wait at least for 20 seconds.

(d) Turn the ignition switch to ON, and wait at least for 20 seconds.

(e) Check DTC. (See page DI-239)

OK:

DTC B0131/64 is not output.

HINT:

Codes other than code B0131/64 may be output at this time, but they are not relevant to this check.

NG	Replace airbag sensor assembly.

OK

4	Check P/T squib (RH).

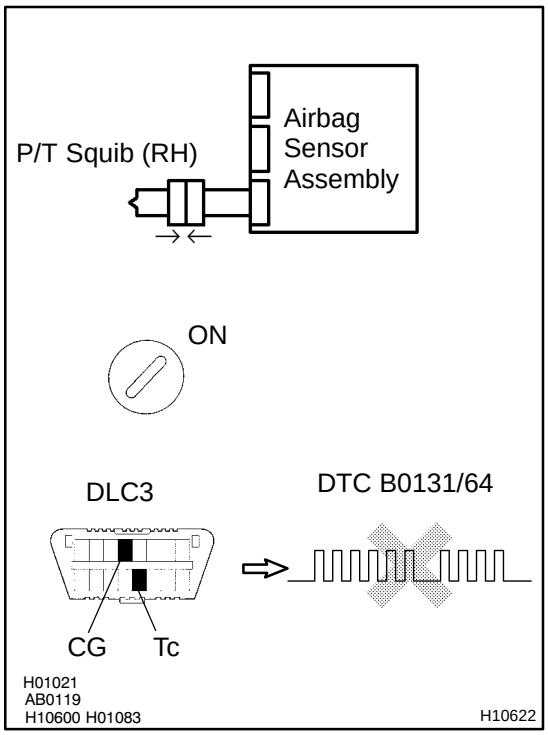

PREPARATION:

(a) Turn the ignition switch to LOCK.
(b) Disconnect negative (-) terminal cable from the battery, and wait at least for 90 seconds.
(c) Connect the seat belt pretensioner (RH) connector.
(d) Connect negative (-) terminal cable to the battery, and wait at least for 2 seconds.

CHECK:

(a) Turn the ignition switch to ON, and wait at least for 20 seconds.
(b) Clear DTC stored in memory. (See page DI-239)
(c) Turn the ignition switch to LOCK, and wait at least for 20 seconds.
(d) Turn the ignition switch to ON, and wait at least for 20 seconds.
(e) Check DTC. (See page DI-239)

OK:

DTC B0131/64 is not output.

HINT:

Codes other than code B0131/64 may be output at this time, but they are not relevant to this check.

NG → **Replace seat belt pretensioner (RH).**

OK

From the results of the above inspection, the malfunctioning part can now be considered normal. To make sure of this, use the simulation method to check.

DTC	B0132/61	Short in P/T Squib (RH) Circuit (to Ground)

CIRCUIT DESCRIPTION

The P/T squib (RH) circuit consists of the airbag sensor assembly and seat belt pretensioner (RH).
It causes the SRS to deploy when the SRS deployment conditions are satisfied.
For details of the function of each component, see OPERATION on page RS-2 .
DTC B0132/61 is recorded when a ground short is detected in the P/T squib (RH) circuit.

DTC No.	DTC Detecting Condition	Trouble Area
B0132/61	• Short circuit in P/T squib (RH) wire harness (to ground) • P/T squib (RH) malfunction • Airbag sensor assembly malfunction	• Seat belt pretensioner (RH) • Airbag sensor assembly • Wire harness

WIRING DIAGRAM

See page DI-310 .

INSPECTION PROCEDURE

1	**Prepare for inspection (See step 1 on page DI-390).**

2	**Check P/T squib (RH) circuit.**

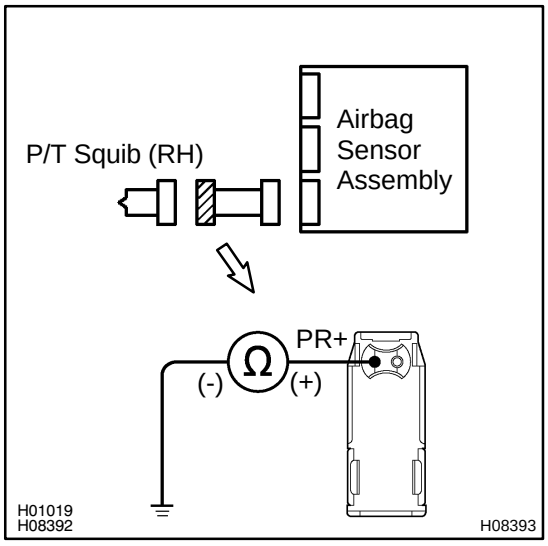

CHECK:

For the connector (on the seat belt pretensioner side) between the seat belt pretensioner (RH) and the airbag sensor assembly, measure the resistance between PR+ and body ground.

OK:

Resistance: 1 MΩ or Higher

NG → **Repair or replace harness or connector between seat belt pretensioner (RH) and airbag sensor assembly.**

OK

3	Check airbag sensor assembly.

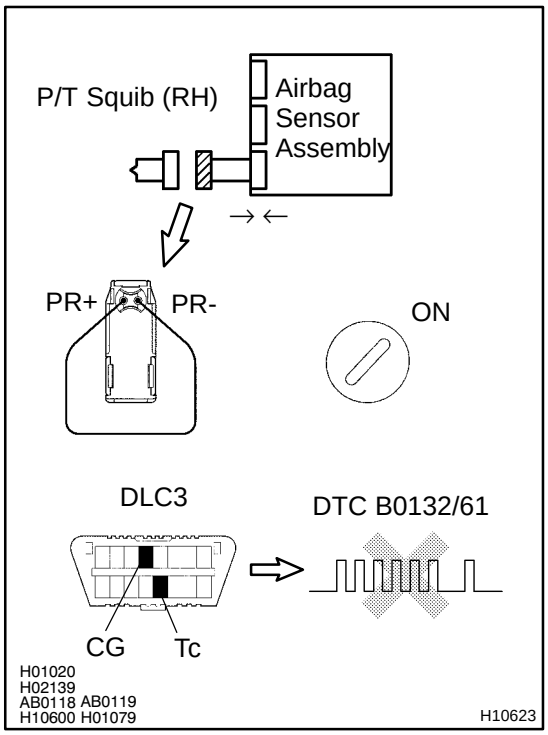

PREPARATION:

(a) Connect the connector to the airbag sensor assembly.

(b) Using a service wire, connect PR+ and PR- of the connector (on the seat belt pretensioner side) between the seat belt pretensioner (RH) and the airbag sensor assembly.

(c) Connect negative (-) terminal cable to the battery, and wait at least for 2 seconds.

CHECK:

(a) Turn the ignition switch to ON and wait at least for 20 seconds.

(b) Clear DTC stored in memory (See step 5 on page DI-239).

(c) Turn the ignition switch to LOCK, and wait at least for 20 seconds.

(d) Turn the ignition switch to ON, and wait at least for 20 seconds.

(e) Check DTC (See page DI-239).

OK:

DTC B0132/61 is not output.

HINT:

Codes other than code B0132/61 may be output at this time, but they are not relevant to this check.

NG	Replace airbag sensor assembly.

OK

4	Check P/T squib (RH).

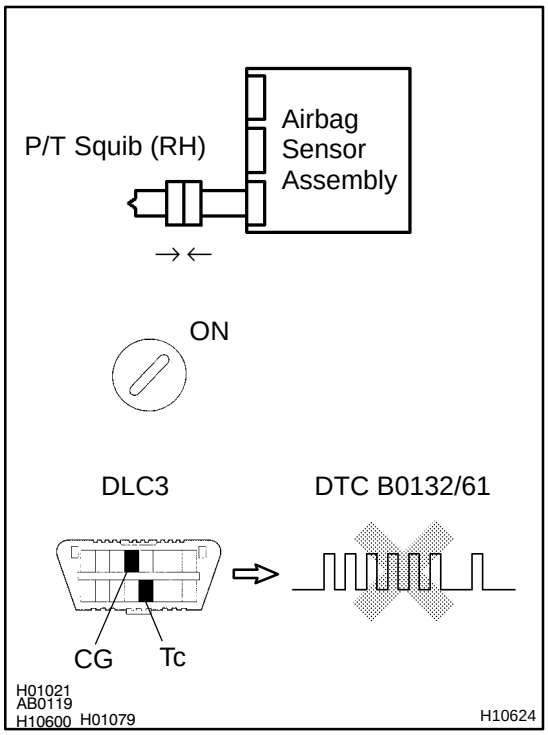

PREPARATION:

(a) Turn the ignition switch to LOCK.
(b) Disconnect negative (-) terminal cable from the battery, and wait at least for 90 seconds.
(c) Connect the seat belt pretensioner (RH) connector.
(d) Connect negative (-) terminal cable to the battery, and wait at least for 2 seconds.

CHECK:

(a) Turn the ignition switch to ON, and wait at least for 20 seconds.
(b) Clear DTC stored in memory (See step 5 on page DI-239).
(c) Turn the ignition switch to LOCK, and wait at least for 20 seconds.
(d) Turn the ignition switch to ON, and wait at least for 20 seconds.
(e) Check DTC (See page DI-239).

OK:

DTC B0132/61 is not output.

HINT:
Codes other than code B0132/61 may be output at this time, but they are not relevant to this check.

NG	Replace seat belt pretensioner (RH).

OK

From the results of the above inspection, the malfunctioning part can now be considered normal. To make sure of this, use the simulation method to check. If the malfunctioning part can not be detected by the simulation method, replace all SRS components including the wire harness.

DTC	B0133/62	Short in P/T Squib (RH) Circuit (to B+)

CIRCUIT DESCRIPTION

The P/T squib (RH) circuit consists of the airbag sensor assembly and seat belt pretensioner (RH).
It causes the SRS to deploy when the SRS deployment conditions are satisfied.
For details of the function of each component, see OPERATION on page RS-2 .
DTC B0133/62 is recorded when a B+ short is detected in the P/T squib (RH) circuit.

DTC No.	DTC Detecting Condition	Trouble Area
B0133/62	• Short circuit in seat belt pretensioner (RH) wire harness (to B+) • P/T squib (RH) malfunction • Airbag sensor assembly malfunction	• Seat belt pretensioner (RH) • Airbag sensor assembly • Wire harness

WIRING DIAGRAM

See page DI-310 .

INSPECTION PROCEDURE

1	**Prepare for inspection (See step 1 on page DI-390).**

2	**Check P/T squib (RH) circuit.**

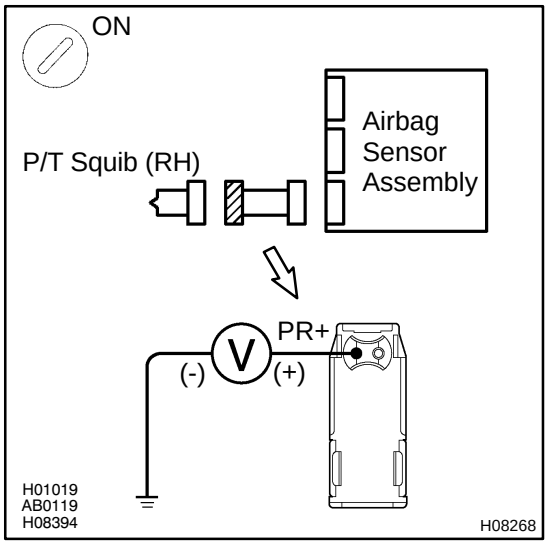

CHECK:

(a) Turn the ignition switch to ON.

(b) For the connector (on the seat belt pretensioner side) between the seat belt pretensioner (RH) and the airbag sensor assembly, measure the voltage between PR+ and body ground.

OK:

Voltage: 0 V

NG → **Repair or replace harness or connector between seat belt pretensioner (RH) and airbag sensor assembly.**

OK

3	Check airbag sensor assembly.

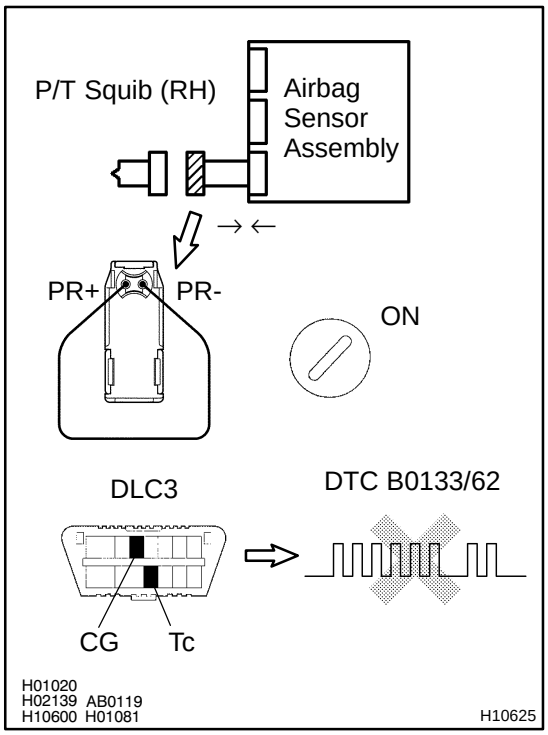

PREPARATION:

(a) Connect the connector to the airbag sensor assembly.

(b) Using a service wire, connect PR+ and PR- of the connector (on the seat belt pretensioner side) between the seat belt pretensioner (RH) and the airbag sensor assembly.

(c) Connect negative (-) terminal cable to the battery, and wait at least for 2 seconds.

CHECK:

(a) Turn the ignition switch to ON and wait at least for 20 seconds.

(b) Clear DTC stored in memory (See step 5 on page DI-239).

(c) Turn the ignition switch to LOCK, and wait at least for 20 seconds.

(d) Turn the ignition switch to ON, and wait at least for 20 seconds.

(e) Check DTC (See page DI-239).

OK:

DTC B0133/62 is not output.

HINT:

Codes other than code B0133/62 may be output at this time, but they are not relevant to this check.

NG → **Replace airbag sensor assembly.**

OK

4	Check P/T squib (RH).

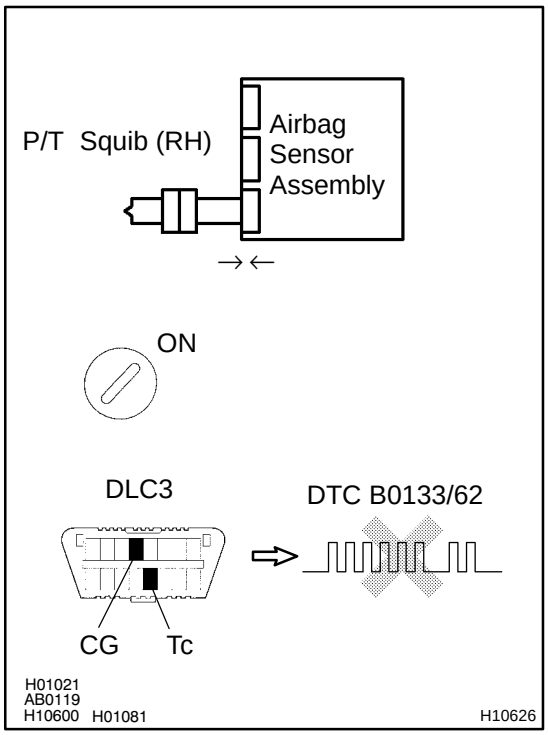

PREPARATION:

(a) Turn the ignition switch to LOCK.
(b) Disconnect negative (-) terminal cable from the battery, and wait at least for 90 seconds.
(c) Connect the seat belt pretensioner (RH) connector.
(d) Connect negative (-) terminal cable to the battery, and wait at least for 2 seconds.

CHECK:

(a) Turn the ignition switch to ON, and wait at least for 20 seconds.
(b) Clear DTC stored in memory (See step 5 on page DI-239).
(c) Turn the ignition switch to LOCK, and wait at least for 20 seconds.
(d) Turn the ignition switch to ON, and wait at least for 20 seconds.
(e) Check DTC (See page DI-239).

OK:

DTC B0133/62 is not output.

HINT:
Codes other than code B0133/62 may be output at this time, but they are not relevant to this check.

NG → **Replace seat belt pretensioner (RH).**

OK

From the results of the above inspection, the malfunctioning part can now be considered normal. To make sure of this, use the simulation method to check. If the malfunctioning part can not be detected by the simulation method, replace all SRS components including the wire harness.

DI16W-46

DTC	B0135/73	Short in P/T Squib (LH) Circuit

CIRCUIT DESCRIPTION

The P/T squib (LH) circuit consists of the airbag sensor assembly and seat belt pretensioner (LH).
It causes the SRS to deploy when the SRS deployment conditions are satisfied.
For details of the function of each component, see OPERATION on page RS-2 .
DTC B0135/73 is recorded when a short is detected in the P/T squib (LH) circuit.

DTC No.	DTC Detecting Condition	Trouble Area
B0135/73	• Short circuit between PL+ wire harness and PL- wire harness of squib • P/T squib (LH) malfunction • Airbag sensor assembly malfunction	• Seat belt pretensioner (LH) • Airbag sensor assembly • Wire harness

WIRING DIAGRAM

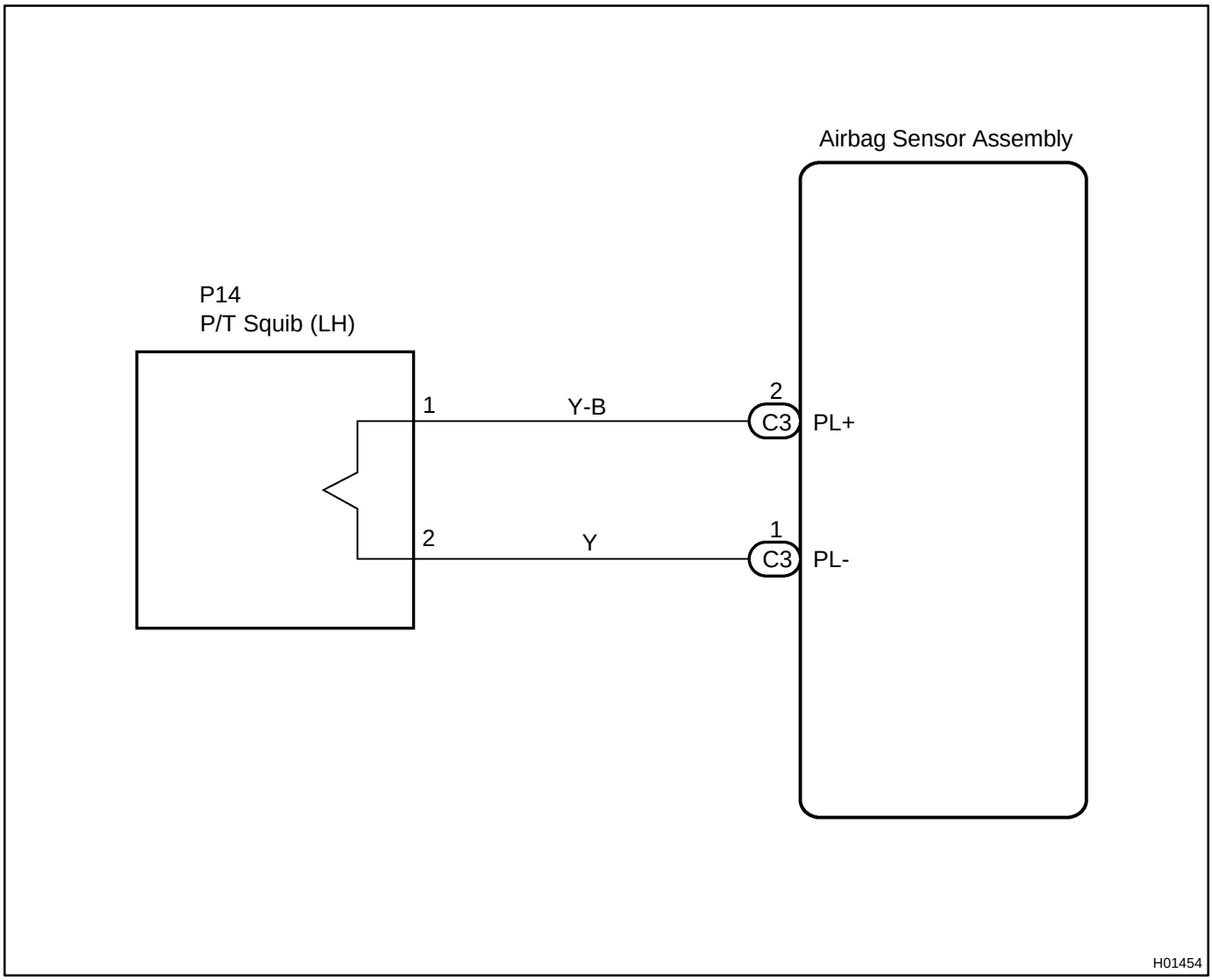

INSPECTION PROCEDURE

1	**Prepare for inspection. (See step 1 on page DI-390)**

2	**Check P/T squib (LH) circuit.**

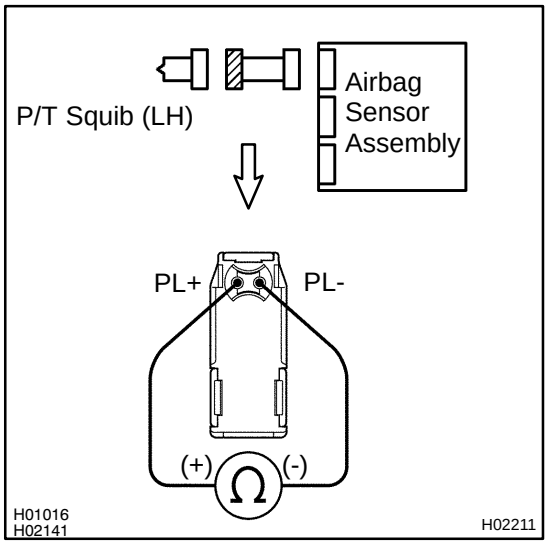

PREPARATION:

Release the airbag activation prevention mechanism of the connector (on the airbag sensor assembly side) between the airbag sensor assembly and the seat belt pretensioner (LH). (See page DI-239)

CHECK:

For the connector (on the seat belt pretensioner side) between the seat belt pretensioner (LH) and the airbag sensor assembly, measure the resistance between PL+ and PL-.

OK:

Resistance: 1 MΩ or Higher

NG → **Repair or replace harness or connector between seat belt pretensioner (LH) and airbag sensor assembly.**

OK

3	Check airbag sensor assembly.

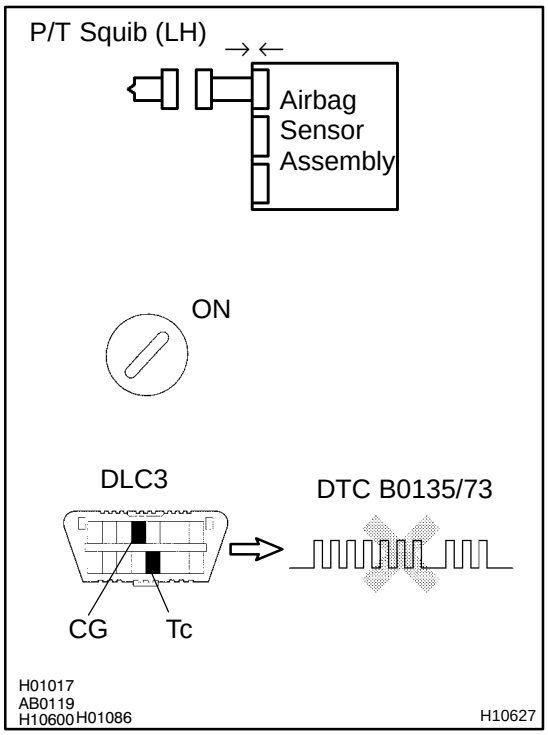

PREPARATION:

(a) Connect the connector to the airbag sensor assembly.
(b) Connect negative (-) terminal cable to the battery, and wait at least for 2 seconds.

CHECK:

(a) Turn the ignition switch to ON and wait at least for 20 seconds.
(b) Clear DTC stored in memory. (See page DI-239)
(c) Turn the ignition switch to LOCK, and wait at least for 20 seconds.
(d) Turn the ignition switch to ON, and wait at least for 20 seconds.
(e) Check DTC. (See page DI-239)

OK:

DTC B0135/73 is not output.

HINT:

Codes other than code B0135/73 may be output at this time, but they are not relevant to this check.

NG → **Replace airbag sensor assembly.**

OK

4	Check P/T squib (LH).

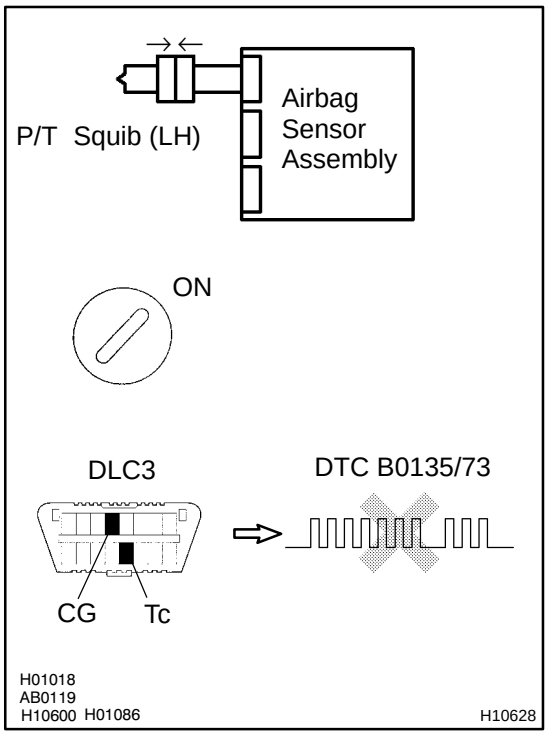

PREPARATION:

(a) Turn the ignition switch to LOCK.
(b) Disconnect negative (-) terminal cable from the battery, and wait at least for 90 seconds.
(c) Connect the seat belt pretensioner (LH) connector.
(d) Connect negative (-) terminal cable to the battery, and wait at least for 2 seconds.

CHECK:

(a) Turn the ignition switch to LOOK, and wait at least for 20 second.
(b) Turn the ignition switch to ON, and wait at least for 20 seconds.
(c) Clear DTC stored in memory. (See page DI-239)
(d) Turn ignition switch to LOCK, and wait at least for 20 seconds.
(e) Turn the ignition switch to ON, and wait at least for 20 seconds.
(f) Check DTC. (See page DI-239)

OK:

DTC B0135/73 is not output.

HINT:

Codes other than code B0135/73 may be output at this time, but they are not relevant to this check.

NG → **Replace seat belt pretensioner (LH).**

OK

From the results of the above inspection, the malfunctioning part can now be considered normal. To make sure of this, use the simulation method to check.

DI1BJ-27

DTC	B0136/74	Open in P/T Squib (LH) Circuit

CIRCUIT DESCRIPTION

The P/T squib circuit (LH) consists of the airbag sensor assembly and seat belt pretensioner (LH).
It causes the SRS to deploy when the SRS deployment conditions are satisfied.
For details of the function of each component, see OPERATION on page RS-2 .
DTC B0136/74 is recorded when an open is detected in the P/T squib (LH) circuit.

DTC No.	DTC Detecting Condition	Trouble Area
B0136/74	• Open circuit in PL+ wire harness or PL- wire harness of squib • P/T squib (LH) malfunction • Airbag sensor assembly malfunction	• Seat belt pretensioner (LH) • Airbag sensor assembly • Wire harness

WIRING DIAGRAM

See page DI-323 .

INSPECTION PROCEDURE

1	**Prepare for inspection. (See step 1 on page DI-390)**

2	**Check P/T squib (LH) circuit.**

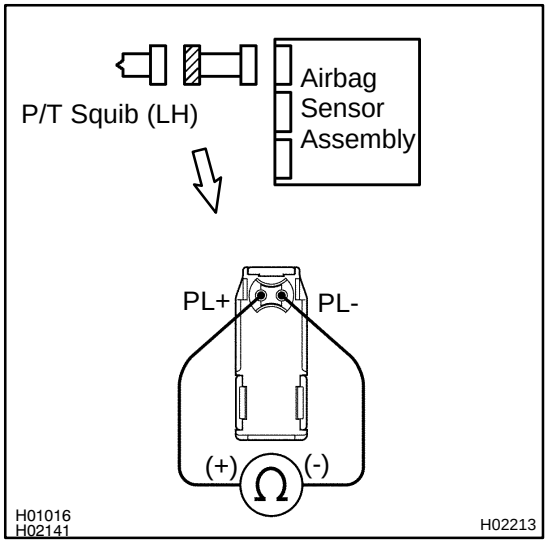

CHECK:

For the connector (on the seat belt pretensioner side) between the seat belt pretensioner (LH) and the airbag sensor assembly, measure the resistance between PL+ and PL-.

OK:

Resistance: Below 1 Ω

NG → **Repair or replace harness or connector between seat belt pretensioner (LH) and airbag sensor assembly.**

OK

3	Check airbag sensor assembly.

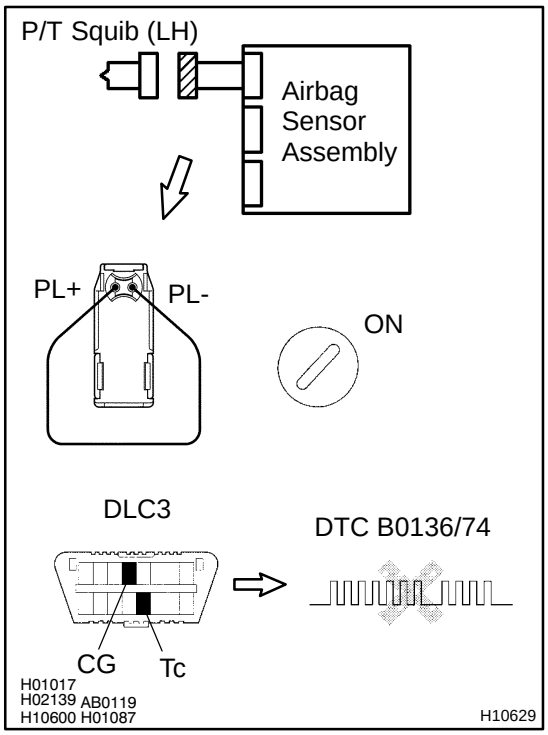

PREPARATION:

(a) Connect the connector to the airbag sensor assembly.
(b) Using a service wire, connect PL+ and PL- of the connector (on the seat belt pretensioner side) between the seat belt pretensioner (LH) and the airbag sensor assembly.
(c) Connect negative (-) terminal cable to the battery, and wait at least for 2 seconds.

CHECK:

(a) Turn the ignition switch to ON and wait at least for 20 seconds.
(b) Clear DTC stored in memory. (See page DI-239)
(c) Turn the ignition switch to LOCK, and wait at least for 20 seconds.
(d) Turn the ignition switch to ON, and wait at least for 20 seconds.
(e) Check DTC. (See page DI-239)

OK:

DTC B0136/74 is not output.

HINT:

Codes other than code B0136/74 may be output at this time, but they are not relevant to this check.

NG	Replace airbag sensor assembly.

OK

4	Check P/T squib (LH).

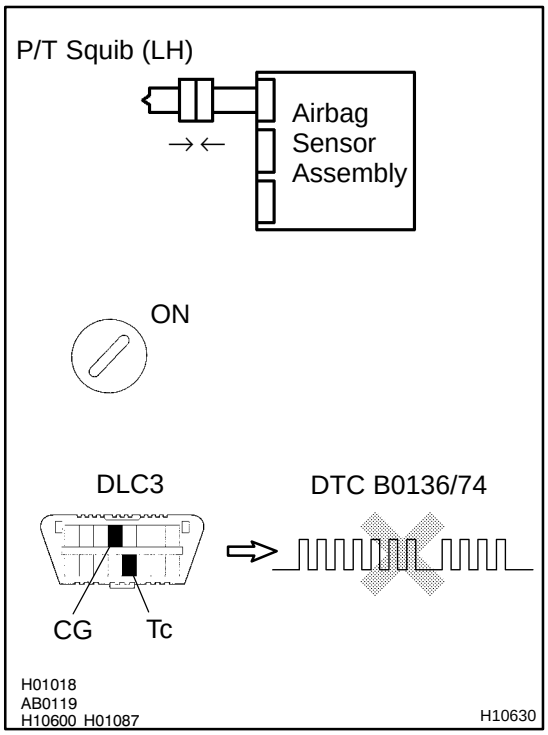

PREPARATION:

(a) Turn the ignition switch to LOCK.
(b) Disconnect negative (-) terminal cable from the battery, and wait at least for 90 seconds.
(c) Connect the seat belt pretensioner (LH) connector.
(d) Connect negative (-) terminal cable to the battery, and wait at least for 2 seconds.

CHECK:

(a) Turn the ignition switch to ON, and wait at least for 20 seconds.
(b) Clear DTC stored in memory. (See page DI-239)
(c) Turn the ignition switch to LOCK, and wait at least for 20 seconds.
(d) Turn the ignition switch to ON, and wait at least for 20 seconds.
(e) Check DTC. (See page DI-239)

OK:

DTC B0136/74 is not output.

HINT:

Codes other than code B0136/74 may be output at this time, but they are not relevant to this check.

NG → **Replace seat belt pretensioner (LH).**

OK →

From the results of the above inspection, the malfunctioning part can now be considered normal. To make sure of this, use the simulation method to check.

DTC	B0137/71	Short in P/T Squib (LH) Circuit (to Ground)

CIRCUIT DESCRIPTION

The P/T squib (LH) circuit consists of the airbag sensor assembly and seat belt pretensioner (LH).
It causes the SRS to deploy when the SRS deployment conditions are satisfied.
For details of the function of each component, see OPERATION on page RS-2 .
DTC B0137/71 is recorded when a ground short is detected in the P/T squib (LH) circuit.

DTC No.	DTC Detecting Condition	Trouble Area
B0137/71	• Short circuit in P/T squib (LH) wire harness (to ground) • P/T squib (LH) malfunction • Airbag sensor assembly malfunction	• Seat belt pretensioner (LH) • Airbag sensor assembly • Wire harness

WIRING DIAGRAM

See page DI-323 .

INSPECTION PROCEDURE

1	**Prepare for inspection (See step 1 on page DI-390).**

2	**Check P/T squib (LH) circuit.**

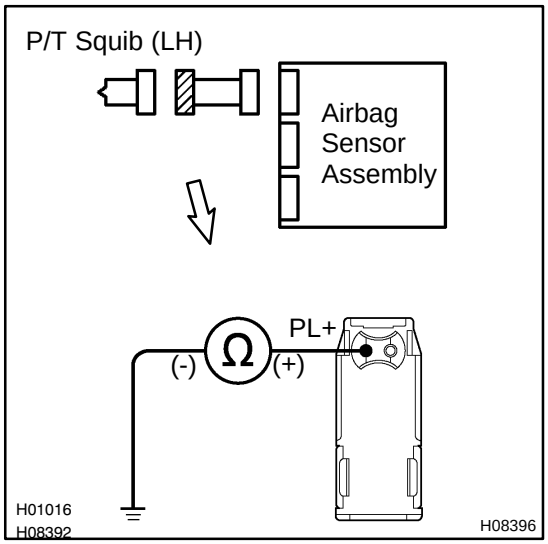

CHECK:

For the connector (on the seat belt pretensioner side) between the seat belt pretensioner (LH) and the airbag sensor assembly, measure the resistance between PL+ and body ground.

OK:

Resistance: 1 MΩ or Higher

NG → **Repair or replace harness or connector between seat belt pretensioner (LH) and airbag sensor assembly.**

OK

3	Check airbag sensor assembly.

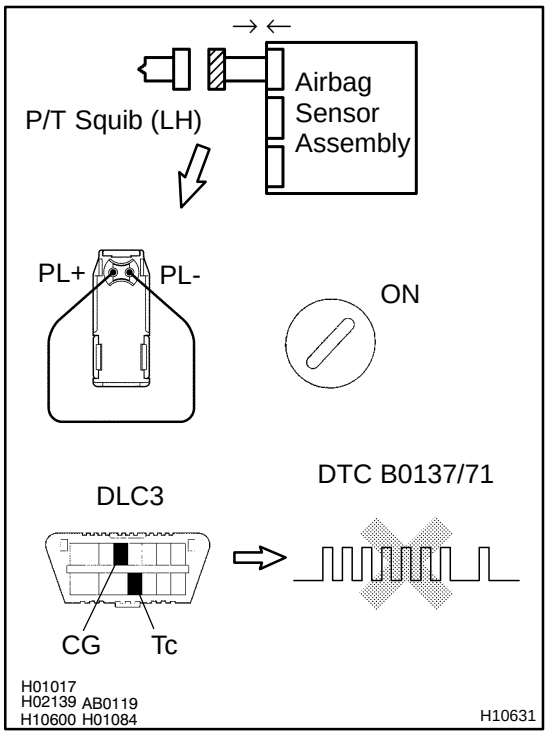

PREPARATION:

(a) Connect the connector to the airbag sensor assembly.
(b) Using a service wire, connect PL+ and PL- of the connector (on the seat belt pretensioner side) between the seat belt pretensioner (LH) and the airbag sensor assembly.
(c) Connect negative (-) terminal cable to the battery, and wait at least for 2 seconds.

CHECK:

(a) Turn the ignition switch to ON and wait at least for 20 seconds.
(b) Clear DTC stored in memory (See step 5 on page DI-239).
(c) Turn the ignition switch to LOCK, and wait at least for 20 seconds.
(d) Turn the ignition switch to ON, and wait at least for 20 seconds.
(e) Check DTC (See page DI-239).

OK:

DTC B0137/71 is not output.

HINT:

Codes other than code B0137/71 may be output at this time, but they are not relevant to this check.

NG	Replace airbag sensor assembly.

OK

4	Check P/T squib (LH).

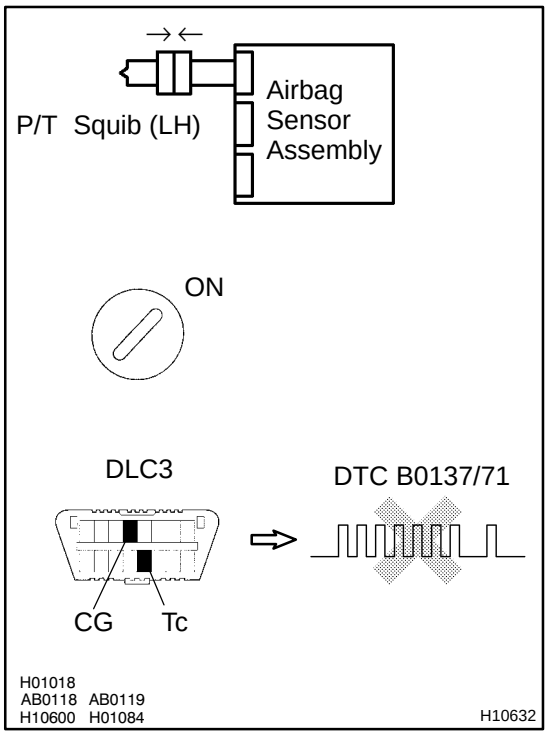

PREPARATION:

(a) Turn ignition switch to LOCK.
(b) Disconnect negative (-) terminal cable from the battery, and wait at least for 90 seconds.
(c) Connect the seat belt pretensioner (LH) connector.
(d) Connect negative (-) terminal cable to the battery, and wait at least for 2 seconds.

CHECK:

(a) Turn the ignition switch to ON, and wait at least for 20 seconds.
(b) Clear DTC stored in memory (See step 5 on page DI-239).
(c) Turn the ignition switch to LOCK, and wait at least for 20 seconds.
(d) Turn the ignition switch to ON, and wait at least for 20 seconds.
(e) Check DTC (See page DI-239).

OK:

DTC B0137/71 is not output.

HINT:
Codes other than code B0137/71 may be output at this time, but they are not relevant to this check.

NG → **Replace seat belt pretensioner (LH).**

OK

From the results of the above inspection, the malfunctioning part can now be considered normal. To make sure of this, use the simulation method to check. If the malfunctioning part can not be detected by the simulation method, replace all SRS components including the wire harness.

DI1BL-25

DTC	B0138/72	Short in P/T Squib (LH) Circuit (to B+)

CIRCUIT DESCRIPTION

The P/T squib (LH) circuit consists of the airbag sensor assembly and seat belt pretensioner (LH).
It causes the SRS to deploy when the SRS deployment conditions are satisfied.
For details of the function of each component, see OPERATION on page RS-2 .
DTC B0138/72 is recorded when a B+ short is detected in the P/T squib (LH) circuit.

DTC No.	DTC Detecting Condition	Trouble Area
B0138/72	• Short circuit in seat belt pretensioner (LH) wire harness (to B+) • P/T squib (LH) malfunction • Airbag sensor assembly malfunction	• Seat belt pretensioner (LH) • Airbag sensor assembly • Wire harness

WIRING DIAGRAM

See page DI-323 .

INSPECTION PROCEDURE

1	**Prepare for inspection (See step 1 on page DI-390).**

2	**Check P/T squib (LH) circuit.**

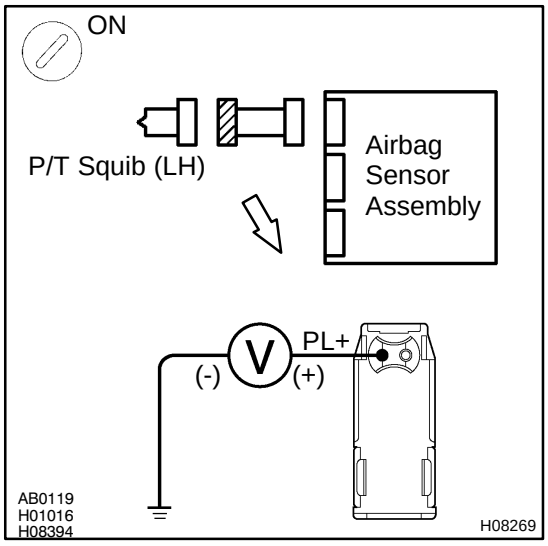

CHECK:

(a) Turn the ignition switch to ON.

(b) For the connector (on the seat belt pretensioner side) between the seat belt pretensioner (LH) and the airbag sensor assembly, measure the voltage between PL+ and body ground.

OK:

Voltage: 0 V

NG → **Repair or replace harness or connector between seat belt pretensioner (LH) and airbag sensor assembly.**

OK

3	Check airbag sensor assembly.

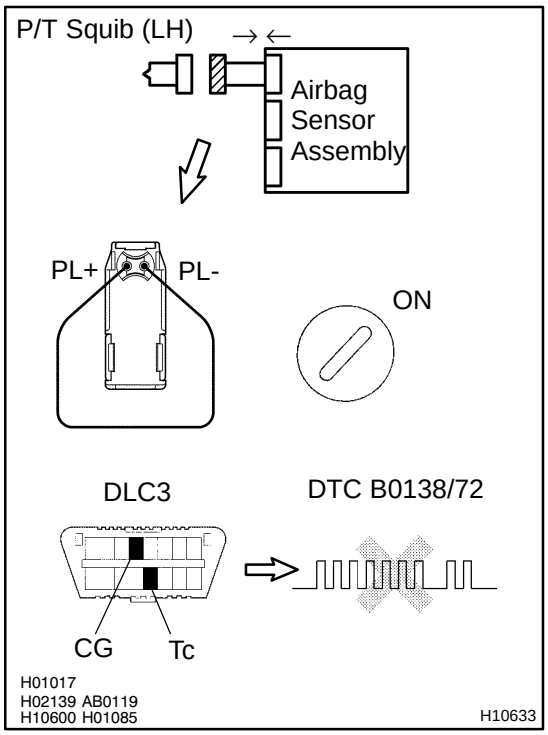

PREPARATION:

(a) Connect the connector to the airbag sensor assembly.

(b) Using a service wire, connect PL+ and PL- of the connector (on the seat belt pretensioner side) between the seat belt pretensioner (LH) and the airbag sensor assembly.

(c) Connect negative (-) terminal cable to the battery, and wait at least for 2 seconds.

CHECK:

(a) Turn the ignition switch to ON and wait at least for 20 seconds.

(b) Clear DTC stored in memory (See step 5 on page DI-239).

(c) Turn the ignition switch to LOCK, and wait at least for 20 seconds.

(d) Turn the ignition switch to ON, and wait at least for 20 seconds.

(e) Check DTC (See page DI-239).

OK:

DTC B0138/72 is not output.

HINT:

Codes other than code B0138/72 may be output at this time, but they are not relevant to this check.

NG	Replace airbag sensor assembly.

OK

4	Check P/T squib (LH).

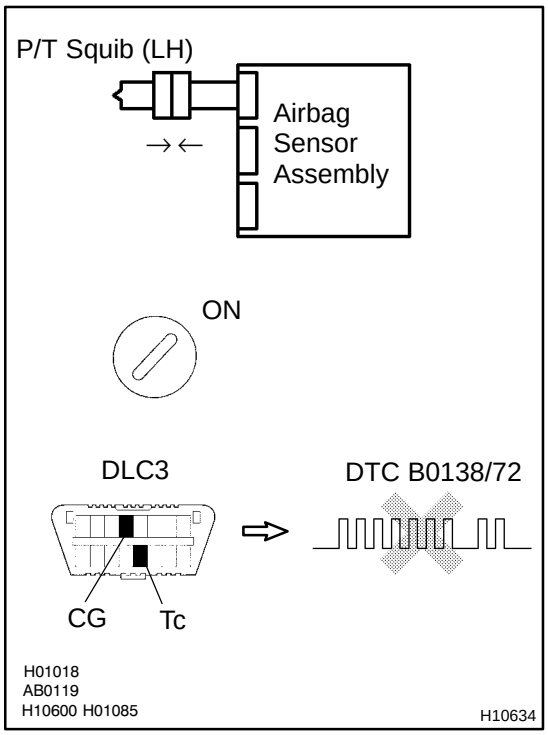

PREPARATION:

(a) Turn the ignition switch to LOCK.
(b) Disconnect negative (-) terminal cable from the battery, and wait at least for 90 seconds.
(c) Connect the seat belt pretensioner (LH) connector.
(d) Connect negative (-) terminal cable to the battery, and wait at least for 2 seconds.

CHECK:

(a) Turn the ignition switch to ON, and wait at least for 20 seconds.
(b) Clear DTC stored in memory (See step 5 on page DI-239).
(c) Turn the ignition switch to LOCK, and wait at least for 20 seconds.
(d) Turn the ignition switch to ON, and wait at least for 20 seconds.
(e) Check DTC (See page DI-239).

OK:

DTC B0138/72 is not output.

HINT:
Codes other than code B0138/72 may be output at this time, but they are not relevant to this check.

NG	Replace seat belt pretensioner (LH).

OK

From the results of the above inspection, the malfunctioning part can now be considered normal. To make sure of this, use the simulation method to check. If the malfunctioning part can not be detected by the simulation method, replace all SRS components including the wire harness.

DI15Z-07

CUSTOMER PROBLEM ANALYSIS CHECK

Supplemental Restraint System Check Sheet

Inspector's Name _____

Customer's Name		**Registration No.**	
		Registration Year	/ /
		Frame No.	
Date Vehicle Brought In	/ /	**Odometer Reading**	**km Miles**

Date Problem Occurred	/ /
Weather	☐ Fine ☐ Cloudy ☐ Rainy ☐ Snowy ☐ Other
Temperature	**Approx.**

Vehicle Operation	☐ Starting ☐ Idling ☐ Driving [☐ Constant speed ☐ Acceleration ☐ Deceleration ☐ Other]
Road Conditions	
Details Of Problem	

Vehicle Inspection, Repair History Prior to Occurrence of Malfunction (Including Supplemental Restraint System)	

Diagnosis System Inspection

SRS Warning Light Inspection	**1st Time**	☐ Remains ON ☐ Sometimes Light Up ☐ Does Not Light Up
	2nd Time	☐ Remains ON ☐ Sometimes Light Up ☐ Does Not Light Up
DTC Inspection	**1st Time**	☐ Normal Code ☐ Malfunction Code [Code.]
	2nd Time	☐ Normal Code ☐ Malfunction Code [Code.]

DI1AZ-18

DIAGNOSTIC TROUBLE CODE CHART

If a malfunction code is displayed during the DTC check, check the circuit listed for that code in the table below (Proceed to the page given for that circuit.).

DTC No. (See Page)	Detection Item	Trouble Area	SRS Warning Light
B0100/13 (DI-254)	• Short in D squib circuit	• Steering wheel pad (squib) • Spiral cable • Airbag sensor assembly • Wire harness	ON
B0101/14 (DI-259)	• Open in D squib circuit	• Steering wheel pad (squib) • Spiral cable • Airbag sensor assembly • Wire harness	ON
B0102/11 (DI-263)	• Short in D squib circuit (to Ground)	• Steering wheel pad (squib) • Spiral cable • Airbag sensor assembly • Wire harness	ON
B0103/12 (DI-267)	• Short in D squib circuit (to B+)	• Steering wheel pad (squib) • Spiral cable • Airbag sensor assembly • Wire harness	ON
B0105/53 (DI-271)	• Short in P squib circuit	• Front passenger airbag assembly (squib) • Airbag sensor assembly • Wire harness	ON
B0106/54 (DI-275)	• Open in P squib circuit	• Front passenger airbag assembly (squib) • Airbag sensor assembly • Wire harness	ON
B0107/51 (DI-278)	• Short in P squib circuit (to Ground)	• Front passenger airbag assembly (squib) • Airbag sensor assembly • Wire harness	ON
B0108/52 (DI-281)	• Short in P squib circuit (to B+)	• Front passenger airbag assembly (squib) • Airbag sensor assembly • Wire harness	ON
B0110/43 (DI-284)	• Short in side squib (RH) circuit	• Side airbag assembly RH (squib) • Airbag sensor assembly • Wire harness	Blink
B0111/44 (DI-288)	• Open in side squib (RH) circuit	• Side airbag assembly RH (squib) • Airbag sensor assembly • Wire harness	Blink
B0112/41 (DI-291)	• Short in side squib (RH) circuit (to ground)	• Side airbag assembly RH (squib) • Airbag sensor assembly • Wire harness	Blink
B0113/42 (DI-294)	• Short in side squib (RH) circuit (to B+)	• Side airbag assembly RH (squib) • Airbag sensor assembly • Wire harness	Blink
B0115/47 (DI-297)	• Short in side squib (LH) circuit	• Side airbag assembly LH (squib) • Airbag sensor assembly • Wire harness	Blink
B0116/48 (DI-301)	• Open in side squib (LH) circuit	• Side airbag assembly LH (squib) • Airbag sensor assembly • Wire harness	Blink

DTC No. (See Page)	Detection Item	Trouble Area	SRS Warning Light
B0117/45 (DI-304)	• Short in side squib (LH) circuit (to ground)	• Side airbag assembly LH (squib) • Airbag sensor assembly • Wire harness	Blink
B0118/46 (DI-307)	• Short in side squib (LH) circuit (to B+)	• Side airbag assembly LH (squib) • Airbag sensor assembly • Wire harness	Blink
B0130/63 (DI-310)	• Short in P/T squib (RH) circuit	• Seat belt pretensioner RH (squib) • Airbag sensor assembly • Wire harness	Blink
B0131/64 (DI-314)	• Open in P/T squib (RH) circuit	• Seat belt pretensioner RH (squib) • Airbag sensor assembly • Wire harness	Blink
B0132/61 (DI-317)	• Short in P/T squib (RH) circuit (to Ground)	• Seat belt pretensioner RH (squib) • Airbag sensor assembly • Wire harness	Blink
B0133/62 (DI-320)	• Short in P/T squib (RH) circuit (to B+)	• Seat belt pretensioner RH (squib) • Airbag sensor assembly • Wire harness	Blink
B0135/73 (DI-323)	• Short in P/T squib (LH) circuit	• Seat belt pretensioner LH (squib) • Airbag sensor assembly • Wire harness	Blink
B0136/74 (DI-327)	• Open in P/T squib (LH) circuit	• Seat belt pretensioner LH (squib) • Airbag sensor assembly • Wire harness	Blink
B0137/71 (DI-330)	• Short in P/T squib (LH) circuit (to Ground)	• Seat belt pretensioner LH (squib) • Airbag sensor assembly • Wire harness	Blink
B0138/72 (DI-333)	• Short in P/T squib (LH) circuit (to B+)	• Seat belt pretensioner LH (squib) • Airbag sensor assembly • Wire harness	Blink
B1100/31 (DI-336)	• Airbag sensor assembly malfunction	• Airbag sensor assembly	ON
B1135/24 (DI-338)	• Half connection in airbag sensor assembly connector	• Airbag sensor assembly • Wire harness	Blink
B1140/32 (DI-342)	• Side airbag sensor assembly (RH) malfunction	• Side airbag sensor assembly (RH) • Wire harness	Blink
B1141/33 (DI-350)	• Side airbag sensor assembly (LH) malfunction	• Side airbag sensor assembly (LH) • Wire harness	Blink
B1142/B1143/34 (DI-358)	• Door side airbag sensor (RH) malfunction	• Door side airbag sensor (RH) • Airbag sensor assembly • Instrument panel wire harness • RH front door wire harness	ON
B1144/B1145/35 (DI-366)	• Door side airbag sensor (LH) malfunction	• Door side airbag sensor (LH) • Airbag sensor assembly • Instrument panel wire harness • LH front door wire harness	ON
B1156/B1157/15 (DI-374)	• Front airbag sensor (RH) malfunction	• Front airbag sensor (RH) • Wire harness • Engine room main wire harness	ON

DTC No. (See Page)	Detection Item	Trouble Area	SRS Warning Light
B1158/B1159/16 (DI-382)	• Front airbag sensor (LH) malfunction	• Front airbag sensor (LH) • Wire harness • Engine room main wire harness	ON
Normal (DI-390)	• System normal	-	OFF
	• Voltage source drop	• Battery • Airbag sensor assembly	ON

HINT:

- When the SRS warning light remains lit up and the DTC is the normal code, this means a voltage source drops.
  This malfunction is not stored in memory by the airbag sensor assembly and if the power source voltage returns to normal, the SRS warning light will automatically go out.
- When 2 or more codes are indicated, the codes will be displayed in numeral order starting from the lowest numbered code.
- If a code not listed on the chart is displayed, the airbag sensor assembly is faulty.

SUPPLEMENTAL RESTRAINT SYSTEM

DI1AX-13

HOW TO PROCEED WITH TROUBLESHOOTING

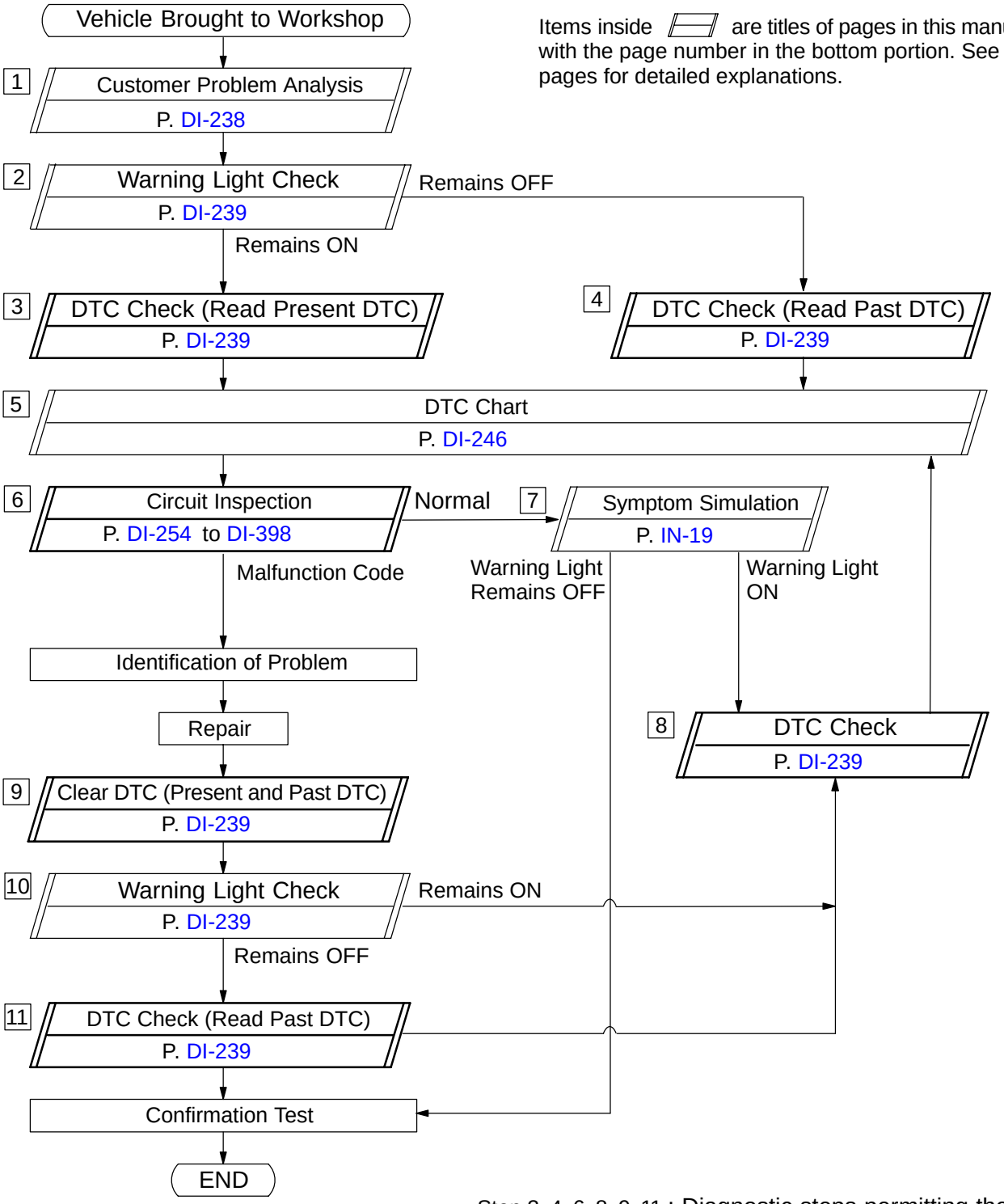

Step 3, 4, 6, 8, 9, 11 : Diagnostic steps permitting the use of the TOYOTA hand-held tester.

DI1BN-33

DTC	Normal	Source Voltage Drop

CIRCUIT DESCRIPTION

The SRS is equipped with a voltage-increase circuit (DC-DC converter) in the airbag sensor assembly in case the source voltage drops.
When the battery voltage drops, the voltage-increase circuit (DC-DC converter) functions to increase the voltage of the SRS to normal voltage.
The diagnosis system malfunction display for this circuit is different from other circuits that is when the SRS warning light remains lit up and the DTC is a normal code, source voltage drop is indicated.
Malfunction in this circuit is not recorded in the airbag sensor assembly, and the source voltage returns to normal, the SRS warning light automatically goes off.

DTC No.	Diagnosis
(Normal)	Source voltage drop

WIRING DIAGRAM

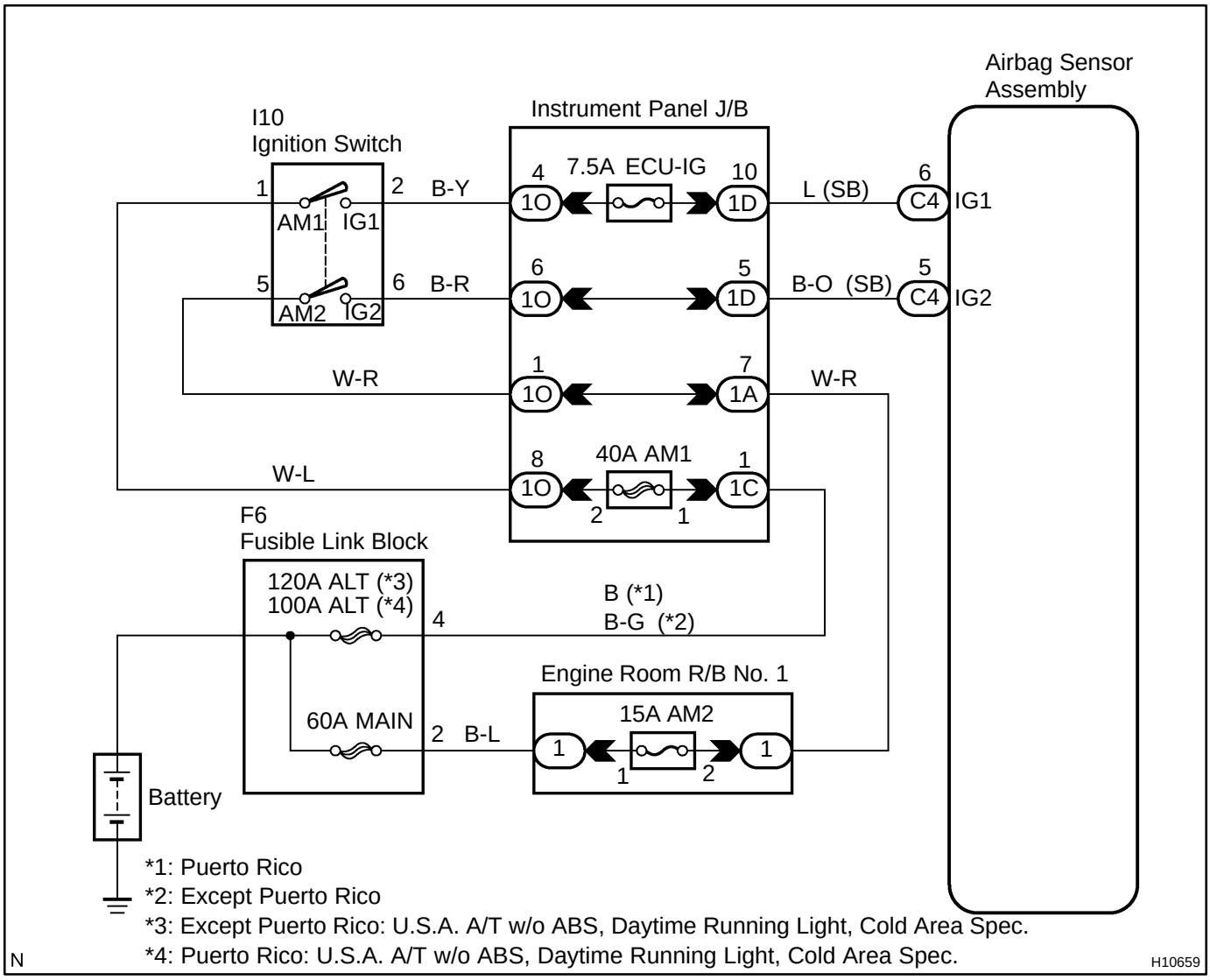

INSPECTION PROCEDURE

1	Prepare for inspection.

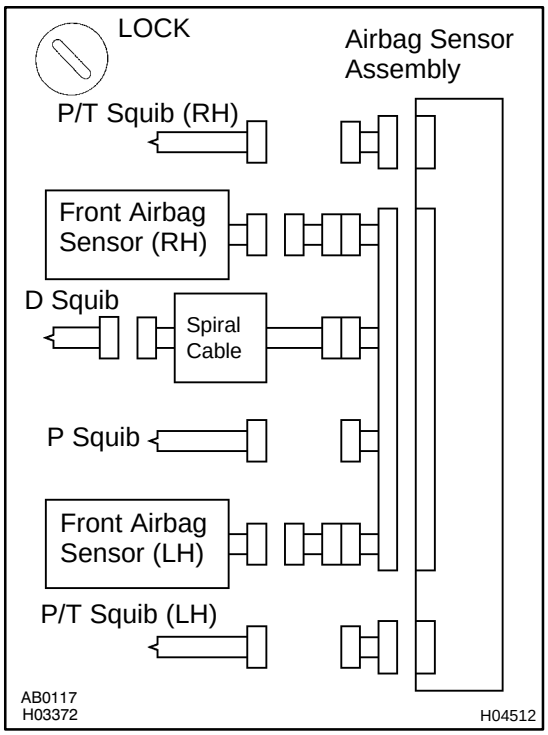

PREPARATION:

(a) Disconnect negative (-) terminal cable from the battery, and wait at least for 90 seconds.
(b) Remove the steering wheel pad. (See page SR-13)
(c) Disconnect the connector of the front passenger airbag assembly. (See page RS-28)
(d) Disconnect the connector of the seat belt pretensioner RH and LH. (See page BO-1 14)
(e) Disconnect the connectors of the airbag sensor assembly. (See page RS-52)
(f) Disconnect the connector of the front airbag sensor RH and LH. (See page RS-57)

CAUTION:

Store the steering wheel pad and front passenger airbag assembly with the front surface facing upward.

2	Check source voltage.

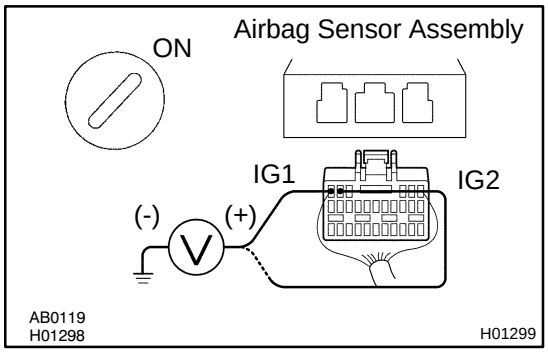

PREPARATION:

Connect negative (-) terminal cable to the battery.

CHECK:

(a) Turn the ignition switch ON.
(b) Measure the voltage between body ground and each of terminals IG1 and IG2 and operate electric system. (defogger, wiper, headlight, heater blower, etc.)

OK:

Voltage: 10 - 14 V

NG	Check harness between battery and airbag sensor assembly, and check battery and charging system.

OK

3	Does SRS warning light turn off?

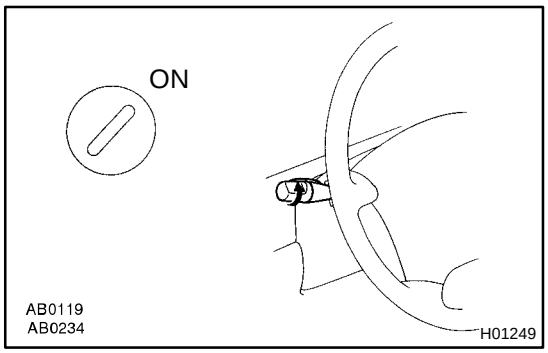

PREPARATION:

(a) Turn the ignition switch to LOCK.
(b) Connect the steering wheel pad connector.
(c) Connect the front passenger airbag assembly connector.
(d) Connect the seat belt pretensioner connectors.
(e) Connect the airbag sensor assembly connectors.
(f) Connect the front airbag sensor connectors.
(g) Turn the ignition switch to ON.

CHECK:

Operate electric system (defogger, wiper, headlight, heater blower, etc.) and check that SRS warning light goes off.

NO → **Check for DTCs. If a DTC is output, perform troubleshooting for the DTC. If a normal code is output, replace airbag sensor assembly.**

YES

From the results of the above inspection, the malfunctioning part can now be considered normal. To make sure of this, use the simulation method to check.

DI8Z3-01

PARTS LOCATION

2-Door :

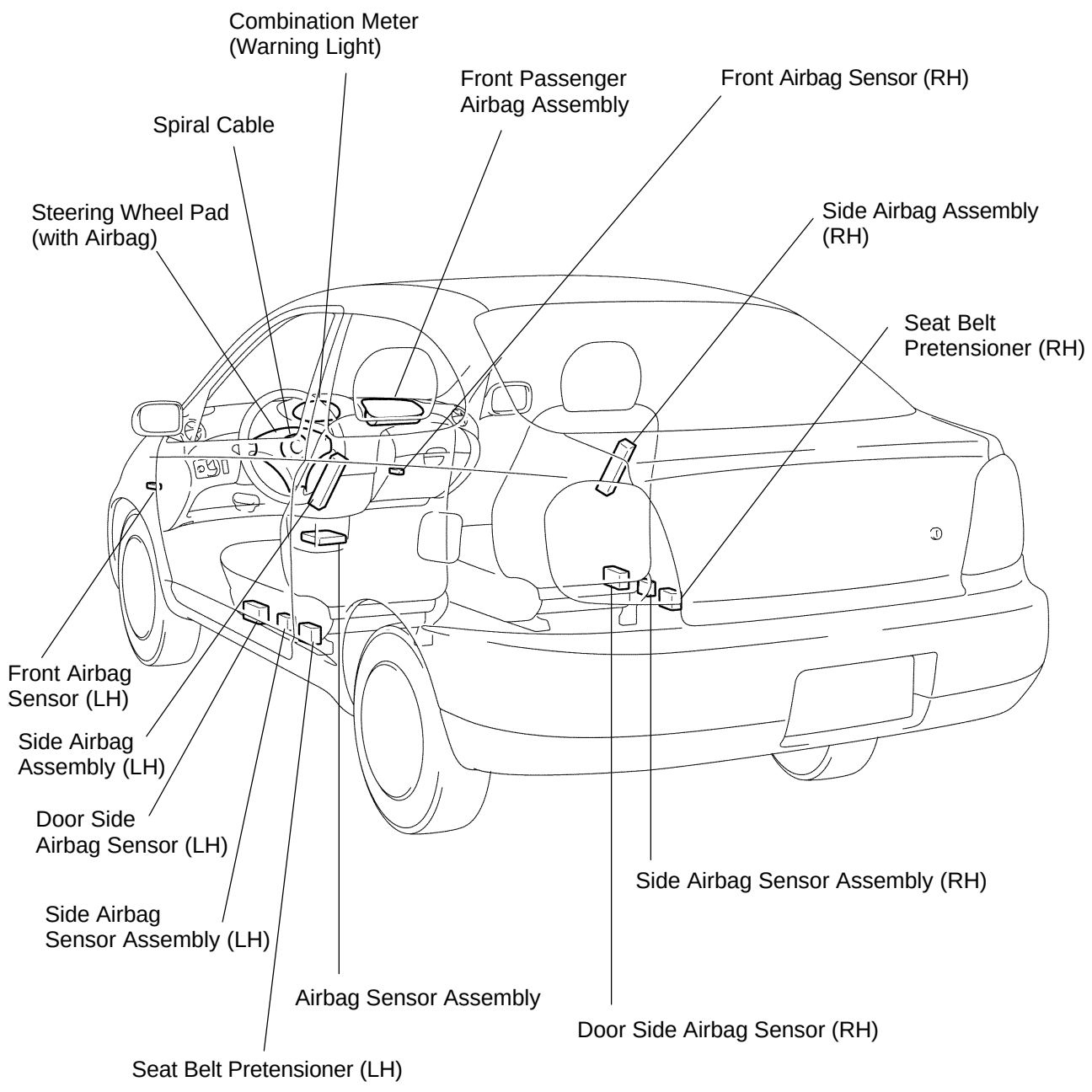

P

H17651

4-Door :

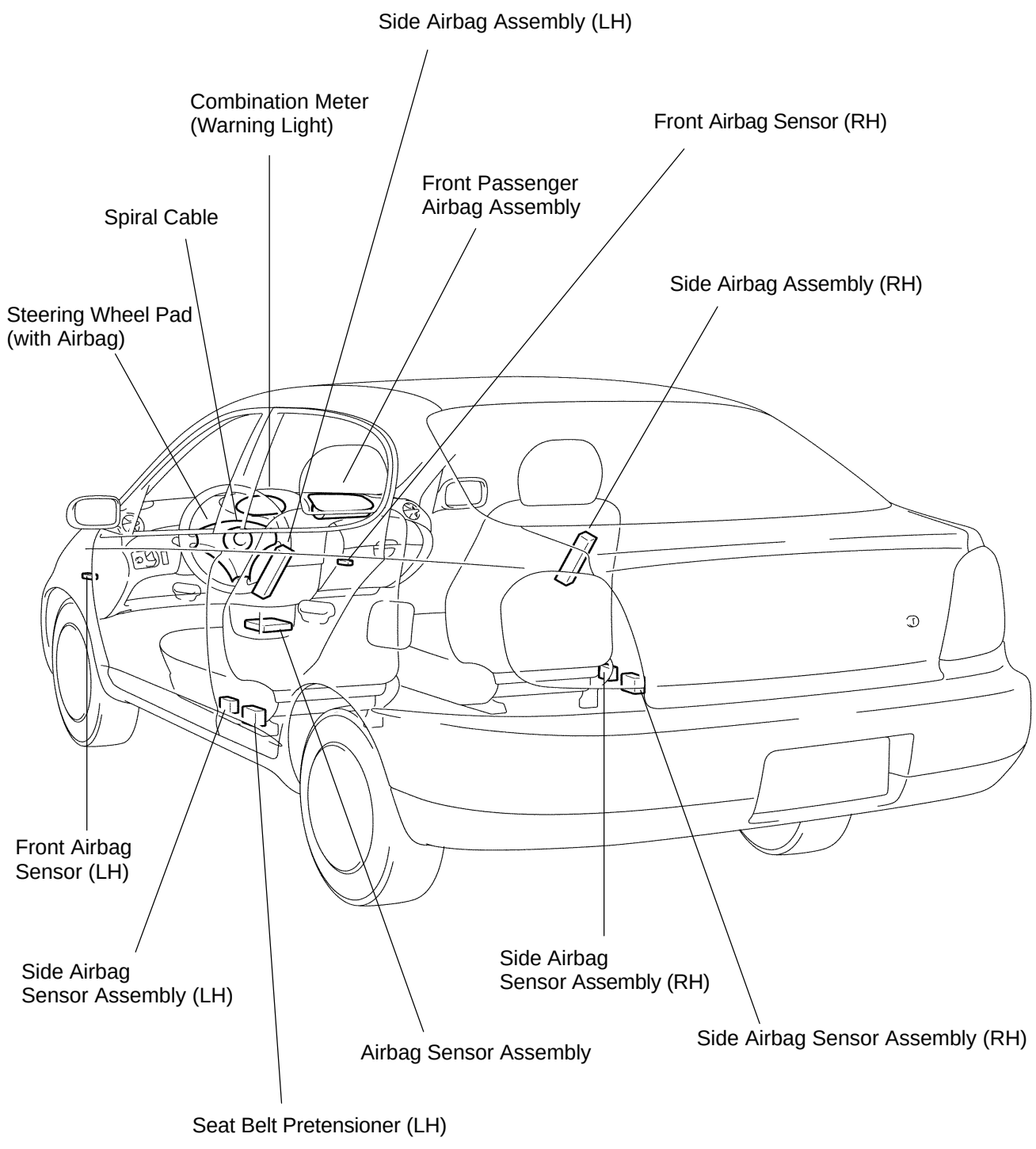

P

H17652

DI8Z2-01

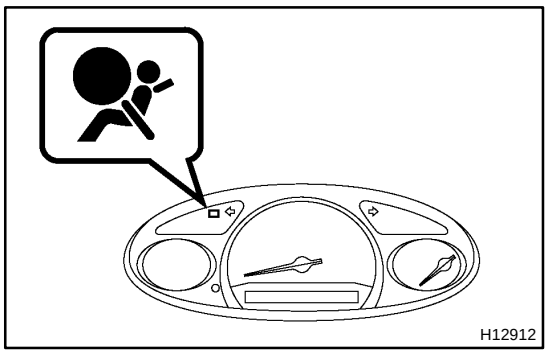

PRE-CHECK

1. SRS WARNING LIGHT CHECK

(a) Turn the ignition switch to the ON position and check that the SRS warning light lights up.

(b) Check that the SRS warning light goes out after approx. 6 seconds.

HINT:

- When the ignition switch is at ON and the SRS warning light remains on or flashes, the airbag sensor assembly has detected a malfunction code.
- If, after approx. 6 seconds have elapsed, the SRS warning light sometimes lights up or the SRS warning light lights up even when the ignition switch is OFF, a short in the SRS warning light circuit can be considered likely. Proceed to "SRS warning light circuit malfunction" on page DI-393 .

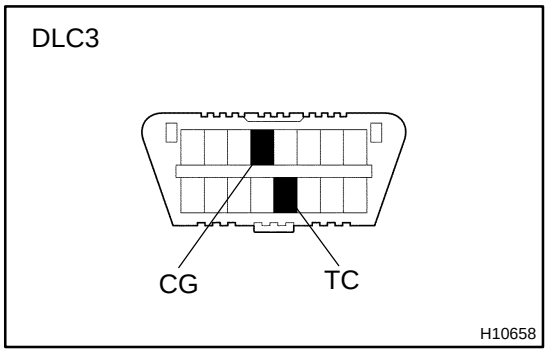

2. DTC CHECK (Using diagnosis check wire)

(a) Present troubles codes:

Output the DTC.

(1) Turn the ignition switch to the ON position and wait for approx. 20 seconds.

(2) Using SST, connect terminals Tc and CG of the DLC3.

SST 09843-18040

NOTICE:

Pay due attention to the terminal connecting position to avoid a malfunction.

(b) Past troubles codes:

Output the DTC.

(1) Using service wire, connect terminals Tc and E1 of the DLC3.

SST 09843-18040

(2) Turn the ignition switch to the ON position and wait for approx. 20 seconds.

NOTICE:

Pay due attention to the terminal connecting position to avoid a malfunction.

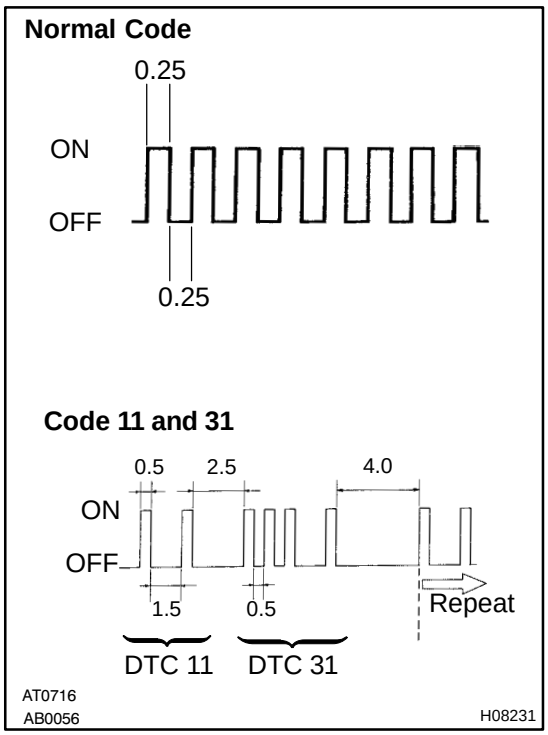

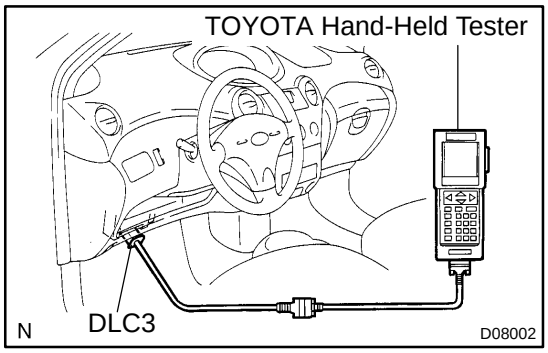

(c) Read the DTC.
Read the 2-digit DTC as indicated by the number of times the SRS warning light blinks. As an example, the blinking patterns, normal, 11 and 31 are shown in the illustration.

- Normal code indication
  The light will blink 2 times per second.
- Malfunction code indication
  The first blinking output indicates the first digit of a 2-digit DTC. After a 1.5-second pause, the second blinking output will indicate the second digit.

If there are 2 or more codes, there will be a 2.5-second pause between each code. After all the codes have been output, there will be a 4.0-second pause and they will all be repeated.
HINT:

- In the event of a number of trouble codes, indication will start from the smallest numbered code.
- If a DTC is not output or a DTC is output without terminal connection, proceed to the Tc terminal circuit inspection on page DI-398 .

3. DTC CHECK (Using TOYOTA hand-held tester)

(a) Hook up the TOYOTA hand-held tester to the DLC3.
(b) Read the DTCs by following the prompts on the tester screen.

HINT:
Please refer to the TOYOTA hand-held tester operator's manual for further details.

4. DTC CLEARANCE (Not using service wire)

When the ignition switch is turned OFF, the diagnostic trouble code is cleared.
HINT:
DTC might not be cleared by turning the ignition switch OFF. In this case, proceed to the next step.

5. DTC CLEARANCE (Using service wire)

(a) Connect the 2 service wires to terminals Tc and A/B of DLC3.
(b) Turn the ignition switch to ON and wait for approx. 6 seconds.

(c) Starting with the Tc terminal, ground alternately terminal Tc and terminal A/B twice each in cycles of 1.0 second. Make sure that the terminals are grounded. Ensure the terminal Tc remain grounded.

HINT:

When alternately grounding terminals Tc and A/B, release ground from one terminal and immediately ground the other terminal within an interval of 0.2 seconds.

If DTCs are not cleared, repeat the above procedure until the codes are cleared.

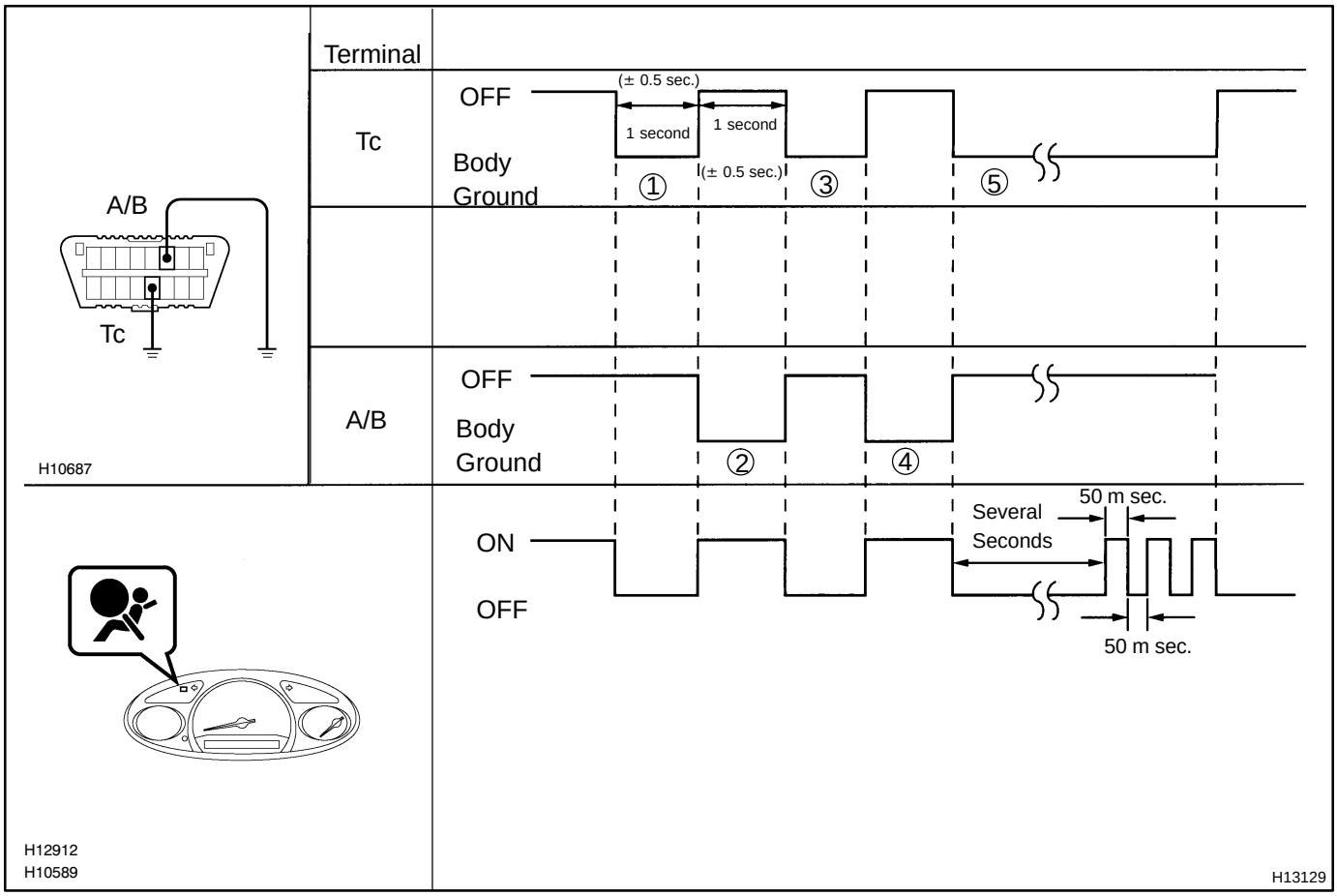

(d) Several seconds after doing the clearing procedure, the SRS warning light will blink in a 50 - m sec. cycle to indicate the codes which have been cleared.

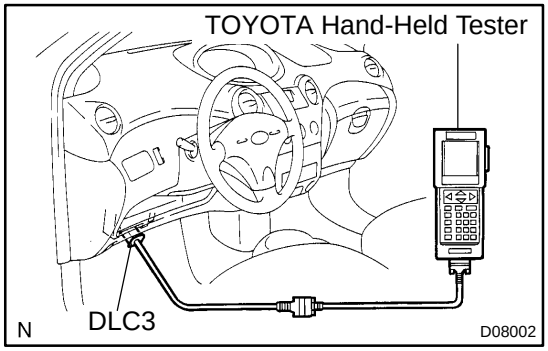

6. DTC CLEARANCE (Using TOYOTA hand-held tester)

(a) Hook up the TOYOTA hand-held tester to the DLC3.

(b) Clear the DTCs by following the prompts on the tester screen.

HINT:

Please refer to the TOYOTA hand-held tester operation's manual for further details.

7. RELEASE METHOD OF AIRBAG ACTIVATION PREVENTION MECHANISM

An airbag activation prevention mechanism is built into the connector for the squib circuit of the SRS.

When release of the airbag activation prevention mechanism is directed in the troubleshooting procedure, as shown in the illustration of the connectors on the next pages, insert paper which has the same thickness as the male terminal between the terminal and the short spring.

CAUTION:

Never release the airbag activation prevention mechanism on the steering wheel pad connector.

NOTICE:

- **Do not release the airbag activation prevention mechanism unless specifically directed by the troubleshooting procedure.**
- **If the inserted paper is too thick the terminal and short spring may be damaged, so always use paper with the same thickness as the male terminal.**

2-Door:

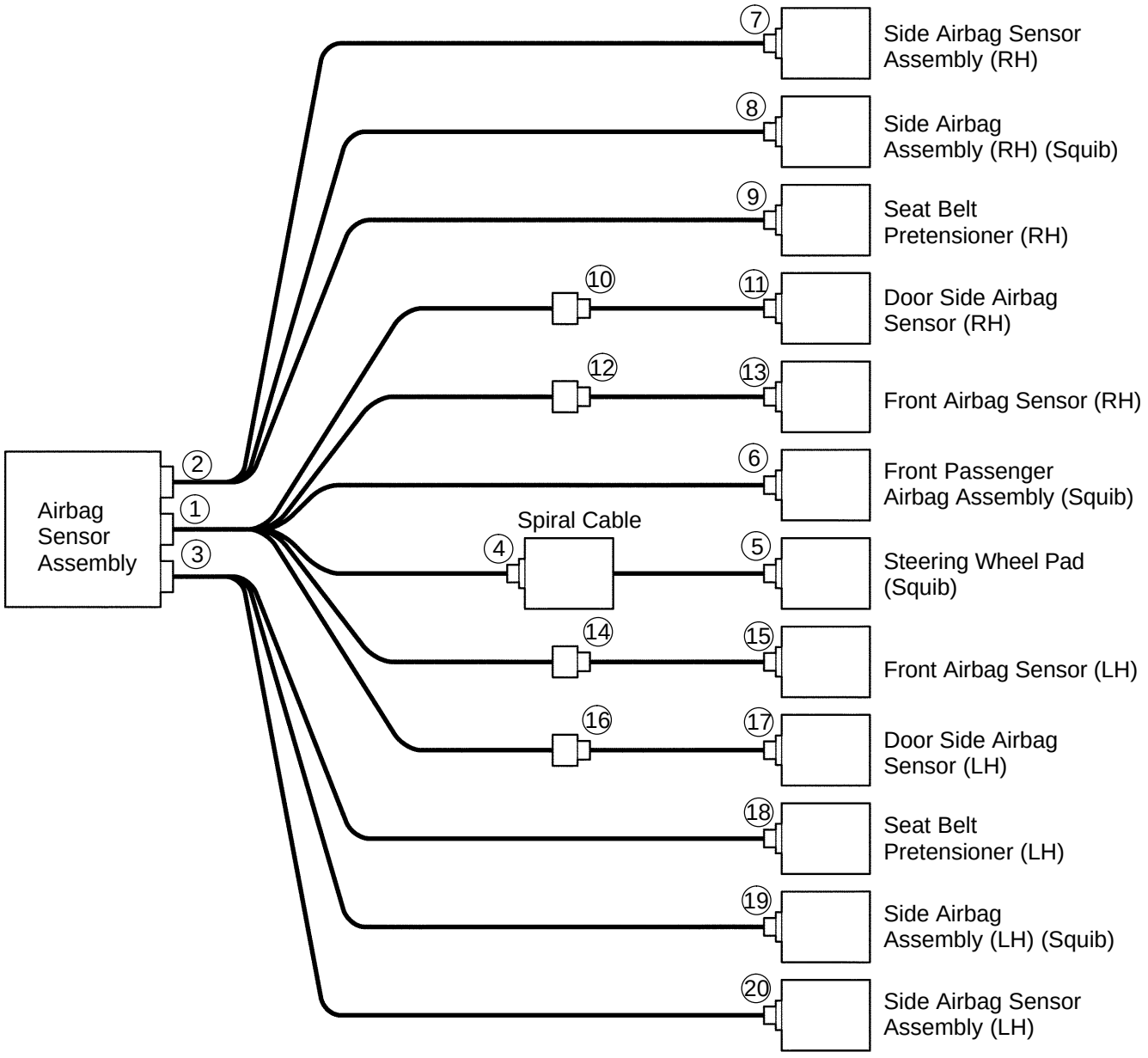
Airbag Sensor Assembly
1
2
3
Spiral Cable
4
5
Steering Wheel Pad (Squib)
6
Front Passenger Airbag Assembly (Squib)
7
Side Airbag Sensor Assembly (RH)
8
Side Airbag Assembly (RH) (Squib)
9
Seat Belt Pretensioner (RH)
10
11
Door Side Airbag Sensor (RH)
12
13
Front Airbag Sensor (RH)
14
15
Front Airbag Sensor (LH)
16
17
Door Side Airbag Sensor (LH)
18
Seat Belt Pretensioner (LH)
19
Side Airbag Assembly (LH) (Squib)
20
Side Airbag Sensor Assembly (LH)
P
H12007

4-Door:

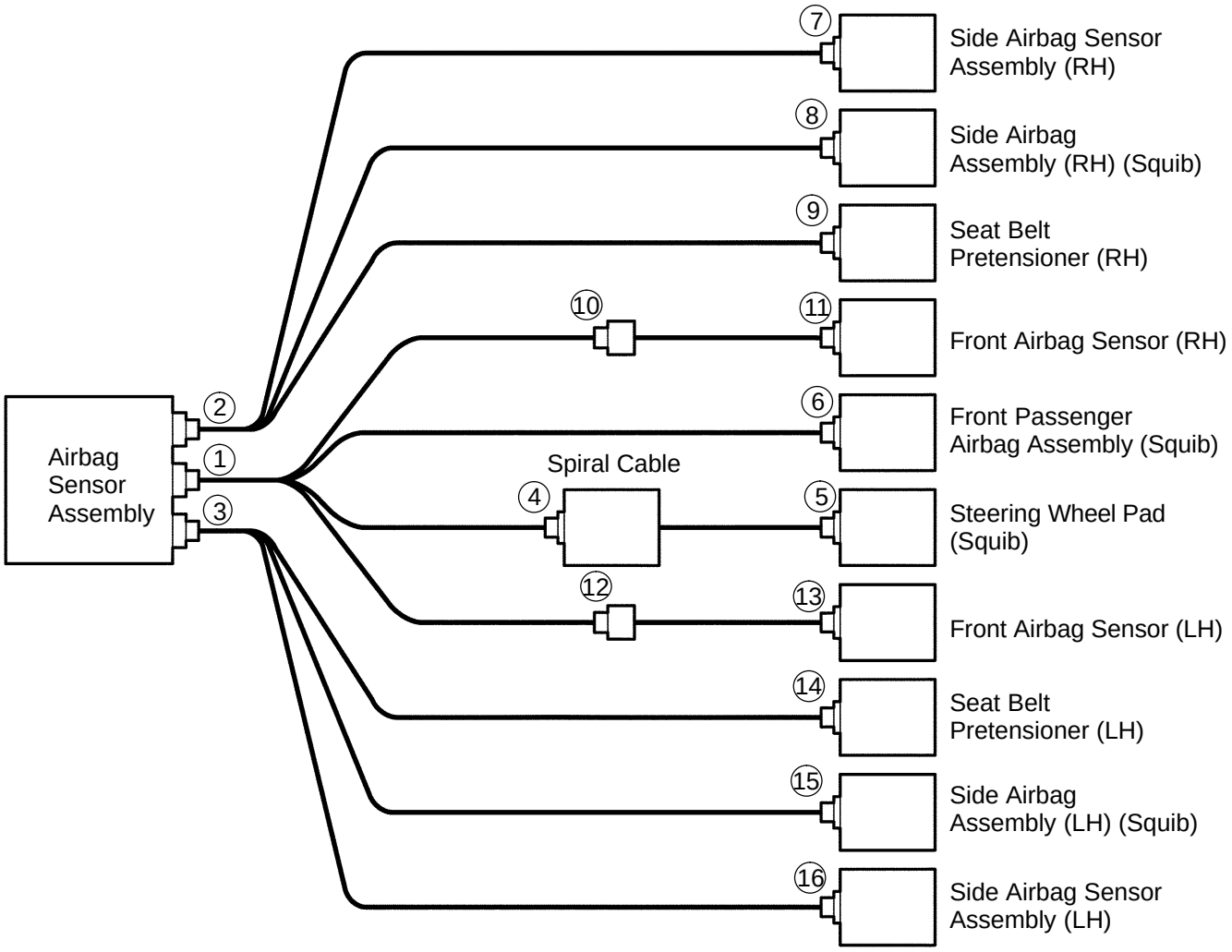

P

H15711

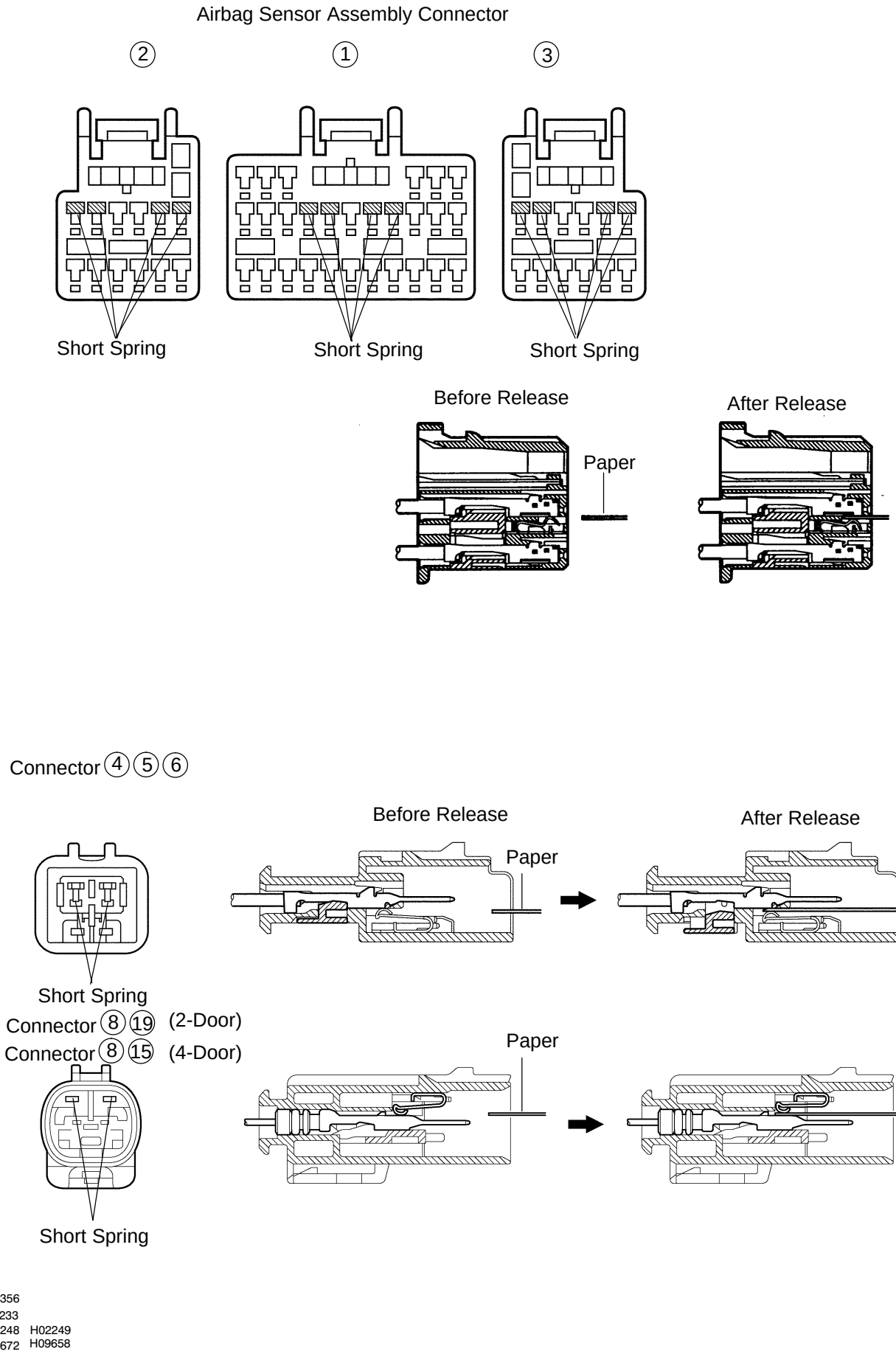

H01356
H01233
H02248 H02249
H09672 H09658

H10693

DI164-26

PROBLEM SYMPTOMS TABLE

Proceed with troubleshooting of each circuit in the table below.

Symptom	Suspect Area	See page
• With the ignition switch in ON position, the SRS warning light sometimes lights up after approx. 6 seconds have elapsed.	• SRS warning light circuit	DI-393
• SRS warning light is always lit up even when ignition switch is in the LOCK position.		
• With the ignition switch in ON position, the SRS warning light does not light up.		
• DTC is not displayed.	• Tc terminal circuit	DI-398
• SRS warning light is always lit up at the time of DTC check procedure.		
• DTC is displayed without Tc and CG terminal connection.		

DI5RJ-21

SRS Warning Light Circuit Malfunction

CIRCUIT DESCRIPTION

The SRS warning light is located on the combination meter.
When the SRS is normal, the SRS warning light lights up for approx. 6 seconds after the ignition switch is turned from the LOCK position to ON position, and then turns off automatically.
If there is a malfunction in the SRS, the SRS warning light lights up to inform the driver of the abnormality.
When terminals Tc and CG of the DLC3 are connected, the DTC is displayed by blinking the SRS warning light.

WIRING DIAGRAM

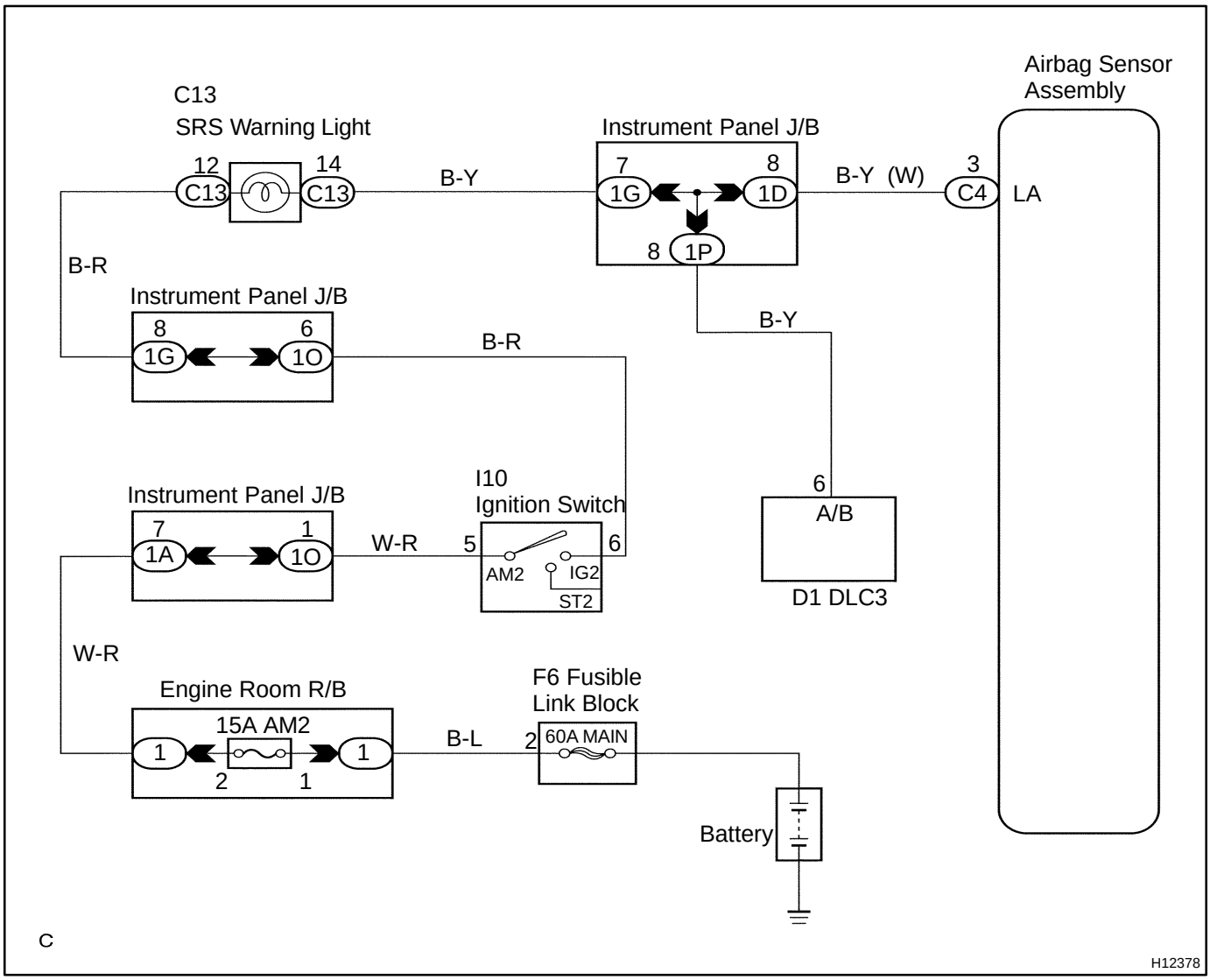

INSPECTION PROCEDURE

Always lights up, when ignition switch is in LOCK position

1	**Prepare for inspection. (See step 1 on page DI-390)**

2	**Does SRS warning light turn off?**

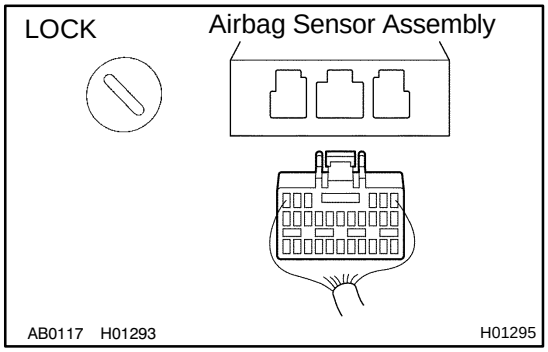

PREPARATION:

(a) Turn the ignition switch to LOCK.
(b) Disconnect negative (-) terminal cable from the battery, and wait at least for 90 seconds.
(c) Disconnect the airbag sensor assembly connector.
(d) Connect negative (-) terminal cable to the battery.

CHECK:

Check operation of SRS warning light.

NO → **Check SRS warning light circuit or terminal A/B circuit of DLC3.**

YES

Replace airbag sensor assembly.

Does not light up, when ignition switch is turned to ON

1	**Check AM2 Fuse.**

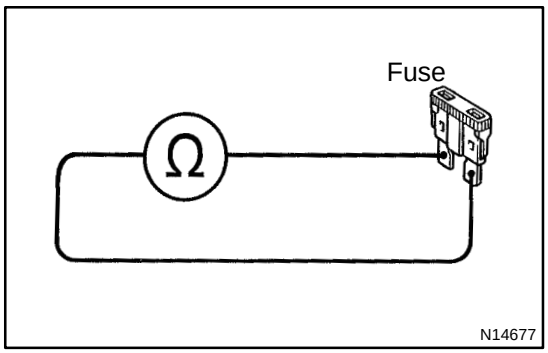

PREPARATION:
Remove AM2 fuse.
CHECK:
Check continuity of AM2 fuse.
OK:
Continuity
HINT:
- Fuse may be burnt out even if it appears to be OK during visual inspection.
- If fuse is OK, install it.

NG → **Go to step 5.**

OK

2	**Prepare for inspection. (See step 1 on page DI-390)**

3	**Check SRS warning light circuit.**

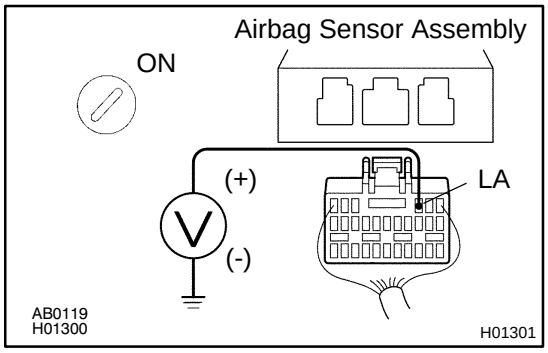

PREPARATION:
(a) Connect negative (-) terminal cable to the battery.
(b) Turn the ignition switch to ON.
CHECK:
Measure the voltage between body ground and LA terminal of the harness side connector of the airbag sensor assembly.
OK:
Voltage: 10 - 14 V

NG → **Check SRS warning light bulb or repair SRS warning light circuit.**

OK

4	Does SRS warning light come on?

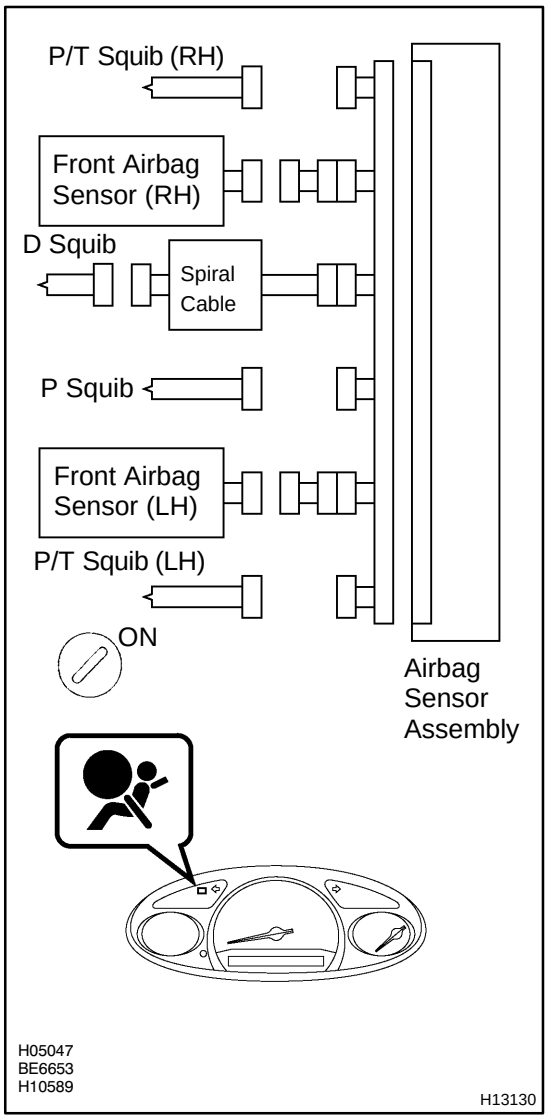

PREPARATION:

(a) Disconnect negative (-) terminal cable from the battery.
(b) Connect the airbag sensor assembly connector.
(c) Connect negative (-) terminal cable to the battery, and wait at least for 2 seconds.
(d) Turn ignition switch to ON.

CHECK:

Check operation of SRS warning light.

NO → **Check terminal LA of airbag sensor assembly. If normal, replace airbag sensor assembly.**

YES

From the results of the above inspection, the malfunctioning part can now be considered normal. To make sure of this, use simulation method to check.

5	**Is new AM2 fuse burnt out again?**

NO → **Using simulation method, reproduce malfunction symptoms. (See page IN-19)**

YES

Check harness between AM2 fuse and SRS warning light.

DI1BQ-42

Tc Terminal Circuit

CIRCUIT DESCRIPTION

By connecting terminals Tc and CG of the DLC3 the airbag sensor assembly is set in the DTC output mode. The DTCs are displayed by blinking the SRS warning light.

WIRING DIAGRAM

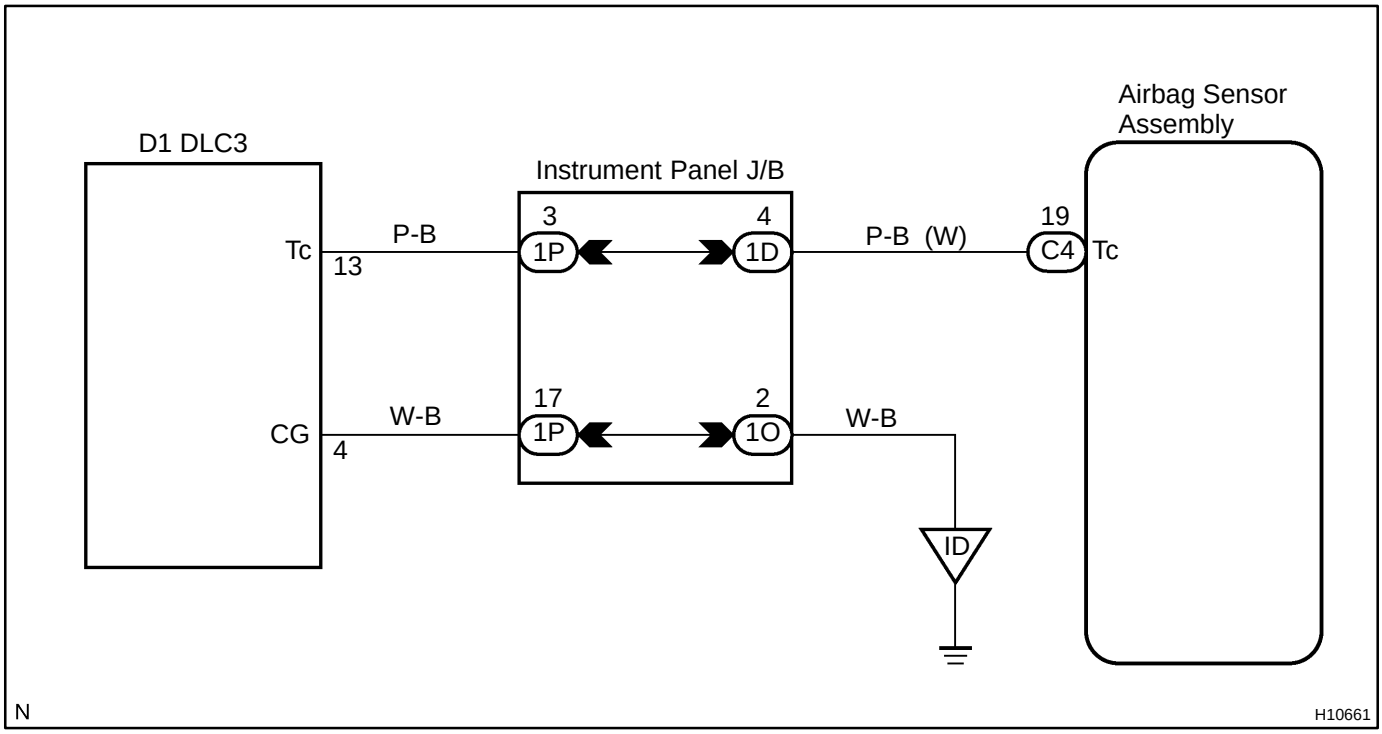

INSPECTION PROCEDURE

If the DTC is not displayed, do the following troubleshooting.

1	**Does SRS warning light light up for approx. 6 seconds?**

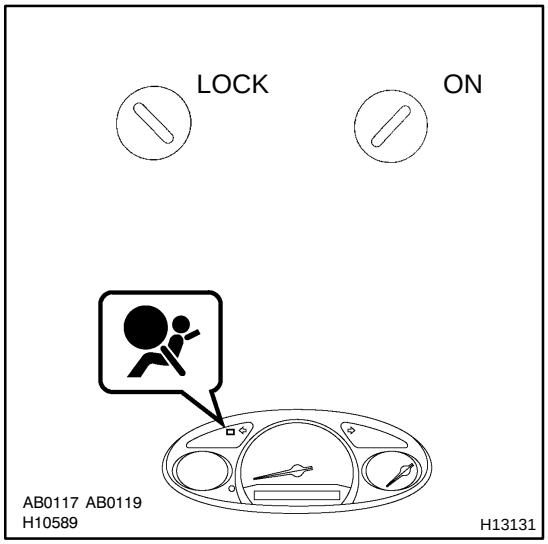

PREPARATION:
Check operation of the SRS warning light after ignition switch is turned from LOCK position to ON position.

NO → **Check SRS warning light system. (See page DI-393)**

YES

2	**Check voltage between terminals Tc and CG of DLC3.**

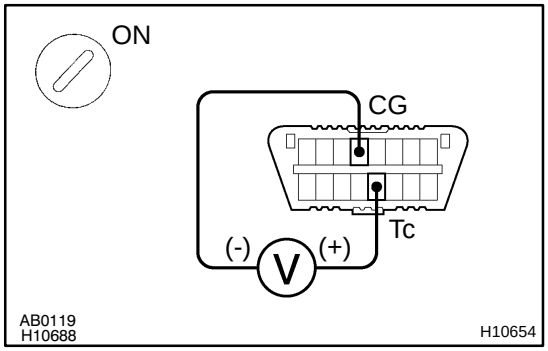

PREPARATION:
Turn ignition switch to ON.
CHECK:
Measure the voltage between terminals Tc and CG of DLC3.
OK:
Voltage: 4 - 14 V

OK → **Go to step 4.**

NG

3	Check voltage between terminal Tc of DLC3 and body ground.

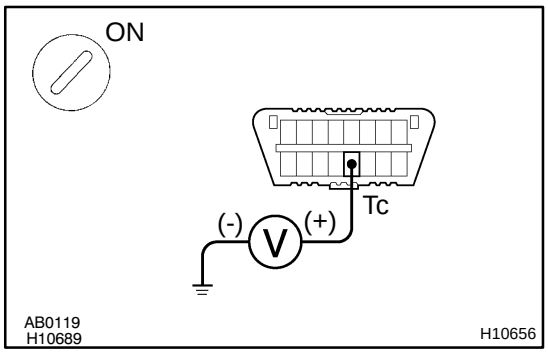

CHECK:

Measure the voltage between terminal Tc of DLC3 and body ground.

OK:

Voltage: 4 - 14 V

OK	Check harness between terminal CG of DLC3 and body ground.

NG

4	Check airbag sensor assembly.

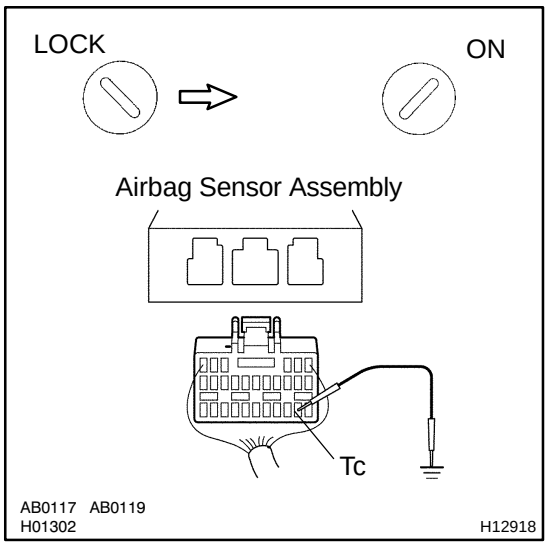

PREPARATION:

(a) Turn ignition switch to LOCK.
(b) Disconnect negative (-) terminal cable from the battery, and wait at least for 90 seconds.
(c) Disconnect the airbag sensor assembly connector.
(d) Insert service wire into terminal Tc from back side as shown in the illustration.
(e) Connect the airbag sensor assembly connector with service wire.
(f) Connect negative (-) terminal cable to the battery.
(g) Turn ignition switch to ON and wait at least for 20 seconds.
(h) Connect service wire of terminal Tc to body ground.

CHECK:

Check operation of SRS warning light.

OK:

SRS waning light comes on.

NOTICE:

Pay due attention to the terminal connecting position to avoid a malfunction.

OK	Check harness between the airbag sensor assembly and DLC3.

NG

Replace airbag sensor assembly.

If the DTC is displayed without a DTC check procedure, perform the following troubleshooting.

1	**Check resistance between terminal Tc of airbag sensor assembly and body ground.**

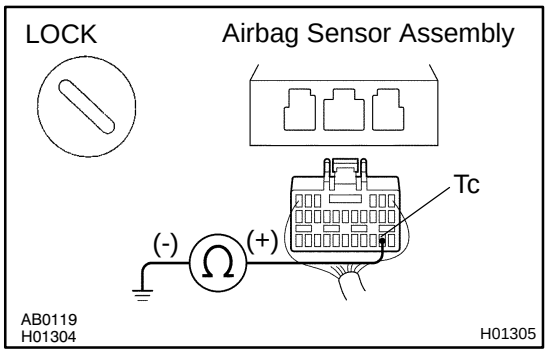

PREPARATION:

(a) Turn the ignition switch to LOCK.

(b) Disconnect negative (-) terminal cable from the battery, and wait at least for 90 seconds.

(c) Disconnect the airbag sensor assembly connector.

CHECK:

Check resistance between terminal Tc of the airbag sensor assembly connector and body ground.

OK:

Resistance: 1 MΩ or Higher

NG → **Repair or replace harness or connector.**

OK

Replace airbag sensor assembly.

DI1HE-28

TERMINALS OF ECU

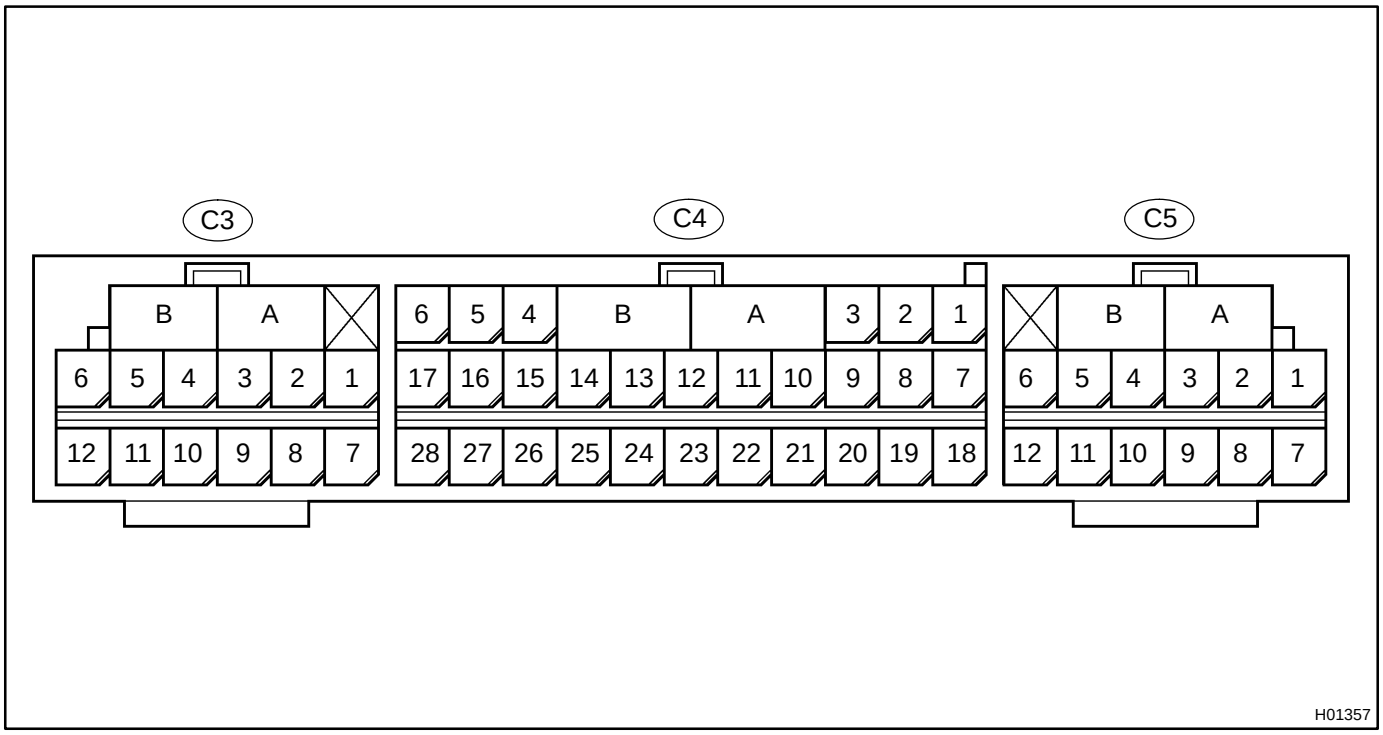

No.	Symbol	Terminal Name
A	-	Electrical Connector Check Mechanism
B	-	Electrical Connector Check Mechanism
C3 - 1	PL-	Squib (Seat Belt Pretensioner, LH)
C3 - 2	PL+	Squib (Seat Belt Pretensioner, LH)
C5 - 3 (*1)	DMR+	Door Side Airbag Sensor (RH)
C5 - 4 (*1)	DMR-	Door Side Airbag Sensor (RH)
C3 - 5 (*2)	SFL+	Squib (Side, LH)
C3 - 6 (*2)	SFL-	Squib (Side, LH)
C3 - 7 (*2)	VUPL	Side Airbag Sensor (LH)
C3 - 9 (*2)	SSL+	Side Airbag Sensor (LH)
C3 - 10 (*2)	FSL	Side Airbag Sensor (LH)
C3 - 11 (*3)	LBE+	Body ECU
C3 - 12 (*2)	ESL	Side Airbag Sensor (LH)
C4 - 3	LA	SRS Warning Light
C4 - 5	IG2	Power Source
C4 - 6	IG1	Power Source
C4 - 9	+SR	Front Airbag Sensor (RH)
C4 - 10	P+	Squib (Passenger)
C4 - 11	P-	Squib (Passenger)
C4 - 12	SIL	Diagnosis
C4 - 13	D-	Squib (Driver)
C4 - 14	D+	Squib (Driver)
C4 - 15	+SL	Front Airbag Sensor (LH)
C4 - 19	Tc	Diagnosis
C4 - 20	-SR	Front Airbag Sensor (RH)

No.	Symbol	Terminal Name
C4 - 26	-SL	Front Airbag Sensor (LH)
C4 - 27	E1	Ground
C4 - 28	E2	Ground
C5 - 1 (*2)	SFR-	Squib (Side, RH)
C5 - 2 (*2)	SFR+	Squib (Side, RH)
C3 - 3 (*1)	DML-	Door Side Airbag Sensor (LH)
C3 - 4 (*1)	DML+	Door Side Airbag Sensor (LH)
C5 - 5	PR+	Squib (Pretensioner, RH)
C5 - 6	PR-	Squib (Pretensioner, RH)
C5 - 7 (*2)	ESR	Side Airbag Sensor (RH)
C5 - 9 (*2)	FSR	Side Airbag Sensor (RH)
C5 - 10 (*2)	SSR+	Side Airbag Sensor (RH)
C5 - 12 (*2)	VUPR	Side Airbag Sensor (RH)

*1 : 2-Door Models
*2 : w/ Side Airbag
*3 : w/o Side Airbag

DI01Q-03

CUSTOMER PROBLEM ANALYSIS CHECK

THEFT DETERRENT SYSTEM Check Sheet

Inspector's name: _____

Customer's Name		**Registration No.**	
		Registration Year	
		Frame No.	
Date Vehicle Brought in	/ /	**Odometer Reading**	**km Mile**

Date Problem First Occurred		/ /
Frequency Problem Occurs		☐ Constant ☐ Sometimes (Times per day, month) ☐ Once only
Weather Conditions When Problem Occurred	**Weather**	☐ Fine ☐ Cloudy ☐ Rainy ☐ Snowy ☐ Various/Others
	Outdoor temperature	☐ Hot ☐ Warm ☐ Cool ☐ Cold (Approx. °F (°C))

Problem Symptom

☐ Theft deterrent system cannot be set.		
☐ Indicator light does not flash when the theft deterrent system is set. (It stays ON or does not light at all.)		
☐ Theft deterrent system does not operate.	☐ When unlocked using the door lock knob. ☐ When the engine hood is opened.	Malfunction ☐ Horns only ☐ Theft deterrent horn only ☐ Headlights only ☐ Taillights only ☐ Starter cut only ☐ Door lock operation only
☐ System cannot be canceled once set.	☐ When door is unlocked using key or wireless door lock control system. ☐ When the key is inserted in the ignition key cylinder and turned to ACC or ON position. (However, only when the system has never operated) ☐ When the luggage compartment door is opened with the key.	
☐ System cannot be canceled during warning operation.	☐ When door is unlocked using key or wireless door lock control system. ☐ When the key is inserted in the ignition key cylinder and turned to ACC or ON position.	
☐ Warning operation starts when the system is set and the door or luggage compartment door is opened with the key.		
☐ Others.		

DI02A-14

Door Courtesy Switch Circuit

CIRCUIT DESCRIPTION

The door courtesy switch goes ON when the door is opened and goes OFF when the door is closed.

WIRING DIAGRAM

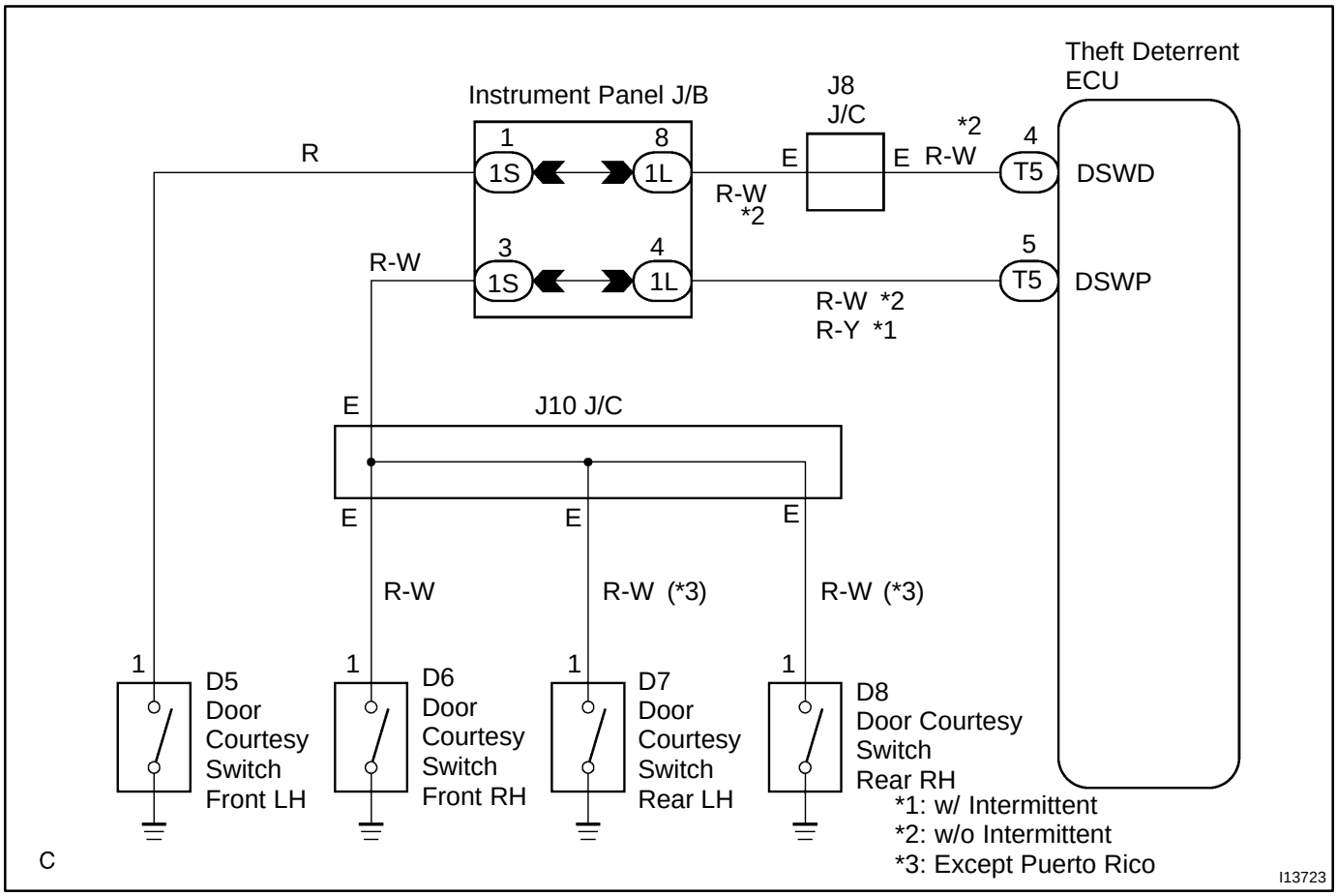

INSPECTION PROCEDURE

1	**Check operation of open door warning light.**

CHECK:

Check that open door warning light comes ON when each door is opened, and goes OFF when all doors are closed.

NG → **Check and repair open door warning light circuit.**

OK

2	**Check for open in harness and connector between theft deterrent ECU and door courtesy switch (See page IN-29).**

NG → **Repair or replace harness or connector.**

OK

Check and replace theft deterrent ECU.*1

*1: When there is a malfunction that the theft deterrent system cannot be set, proceed to the next numbered circuit inspection shown in problem symptoms table (See page DI-412).

DI029-15

Door Unlock Detection Switch Circuit

CIRCUIT DESCRIPTION

The door unlock detection switch is built in the door lock motor assembly. This switch is ON when the door lock knob is in the unlock position and OFF when the lock knob is in the lock position. The ECU detects the door lock knob conditions from this circuit. It is used as one of the operating conditions for the key confinement prevention function.

WIRING DIAGRAM

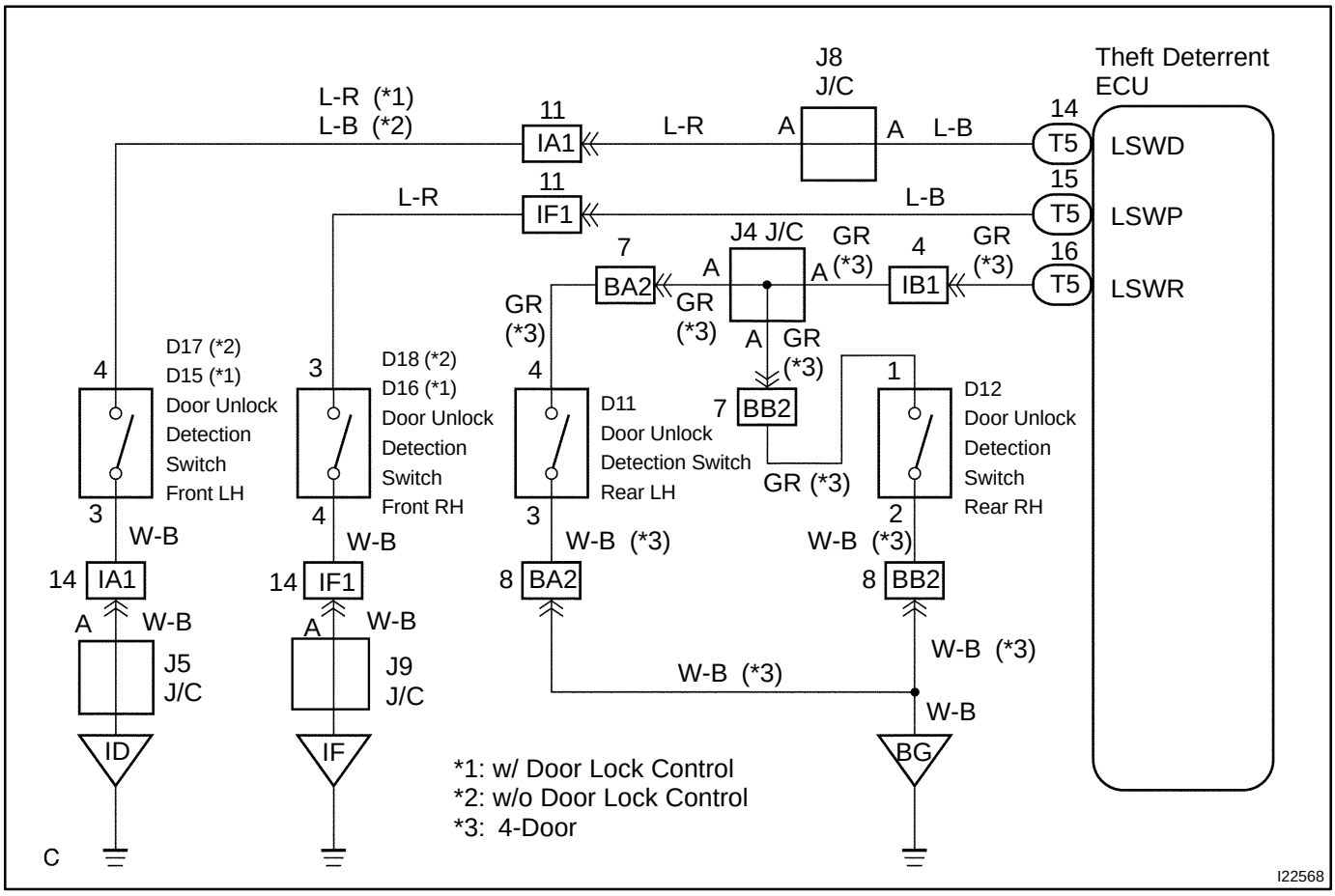

INSPECTION PROCEDURE

1	**Check Door Unlock Detection Switch.**

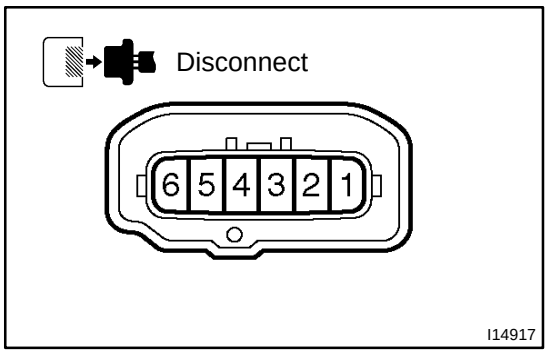

PREPARATION:

(a) Remove the door trim and service hole cover.

(b) Disconnect the door unlock detection switch connector.

CHECK:

Check continuity between terminals 3 and 4 of door unlock detection switch connector, when the door lock knob is operated to the lock side and unlock side.

OK:

Switch Condition	Tester connection	Specified condition
Door unlock	3 - 4	Continuity
Door lock	-	No continuity

NG → **Replace door unlock detection switch.**

OK

2	**Check harness and connectors between ECU and door unlock detection switch, door unlock detection switch and body ground (See page IN-29).**

NG → **Repair or replace harness or connector.**

OK

Proceed to next circuit inspection shown in problem symptoms table (See page DI-412).

DI028-16

Door Key Lock and Unlock Switch Circuit

CIRCUIT DESCRIPTION

The door key lock and unlock switch is built in the door key cylinder. When the key is turned to the lock side, terminal 1 of the switch is grounded and when the key is turned to the unlock side, terminal 2 of the switch is grounded.

WIRING DIAGRAM

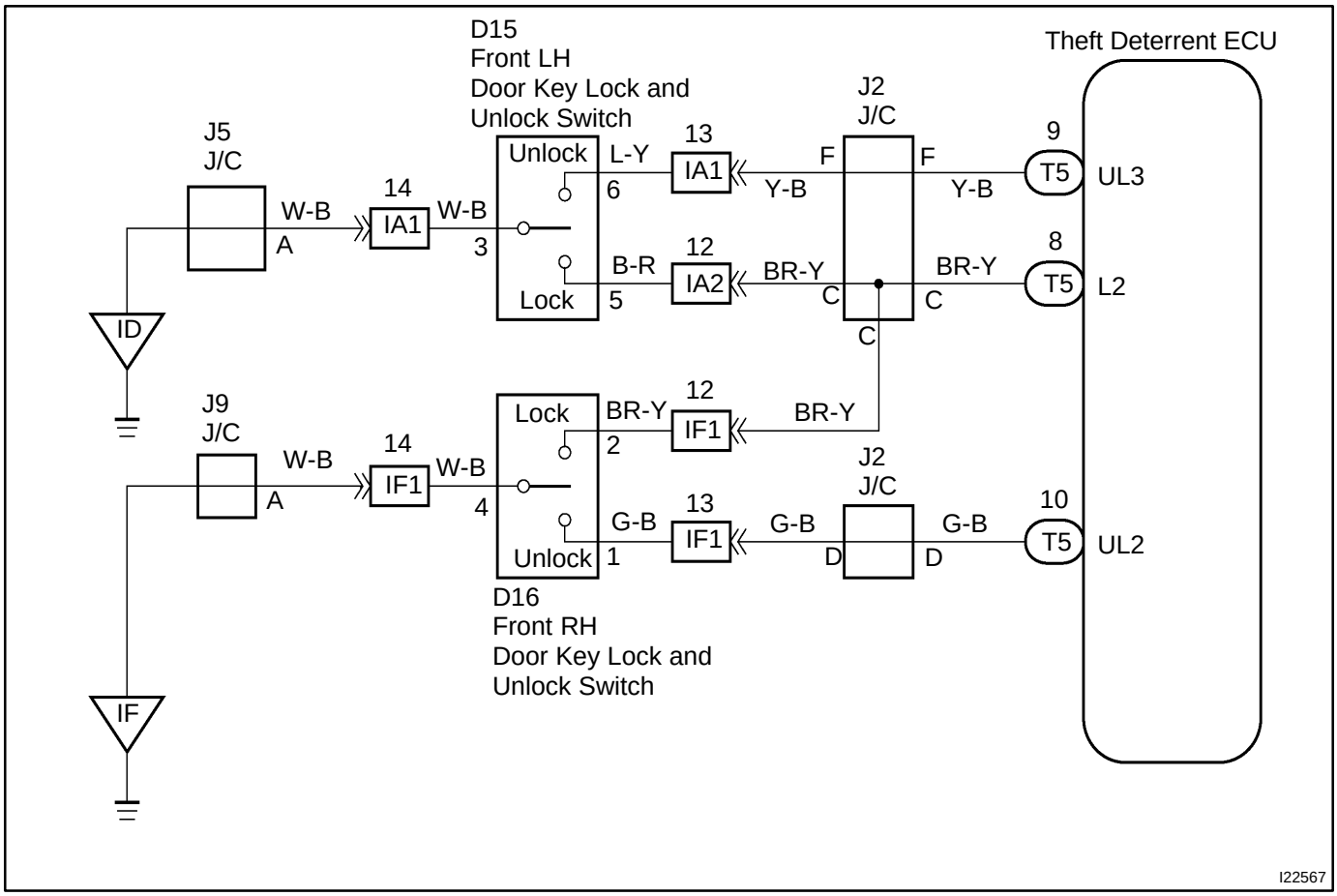

INSPECTION PROCEDURE

1	**Check door key lock and unlock switch.**

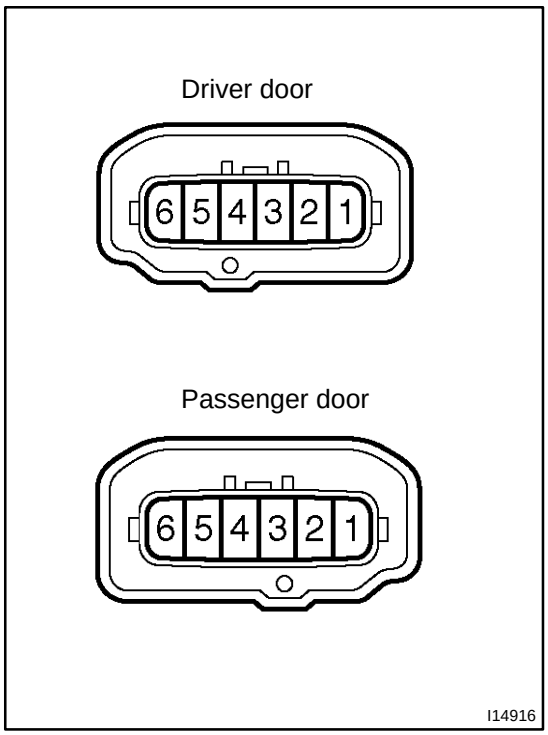

PREPARATION:

(a) Remove the door trim and service hole cover.

(b) Disconnect the door key lock and unlock switch connector.

CHECK:

Check continuity between terminals of door key lock and unlock switch connector, when door key lock and unlock switch is turned to the lock side, unlock side and not turned.

OK:

Driver door:

Switch position	Tester connection	Specified condition
Lock side	3 - 5	Continuity
Unlock side	3 - 6	Continuity
OFF	-	No continuity

Passenger door:

Switch position	Tester connection	Specified condition
Lock side	2 - 4	Continuity
Unlock side	1 - 4	Continuity
OFF	-	No continuity

NG → **Replace door key lock and unlock switch.**

OK

2	**Check harness and connectors between ECU and switch, switch and body ground (See page IN-29).**

NG → **Repair or replace harness or connector.**

OK

Proceed to next circuit inspection shown in problem symptoms table (See page DI-412).

DI01W-20

ECU Power Source Circuit

CIRCUIT DESCRIPTION

This circuit provides power to operate the theft deterrent ECU.

WIRING DIAGRAM

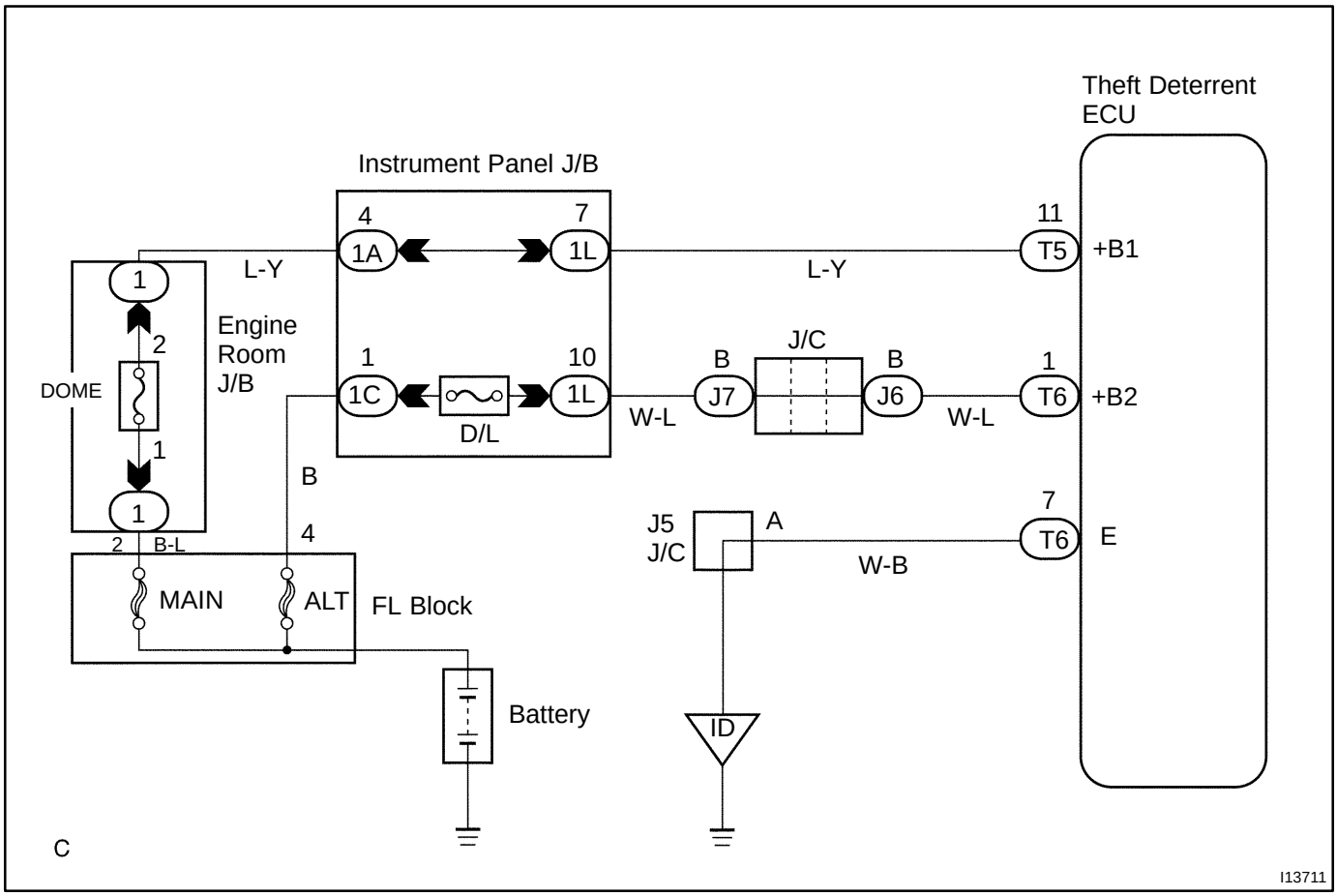

INSPECTION PROCEDURE

1	**Check DOME and D/L fuse.**

Engine room junction block:

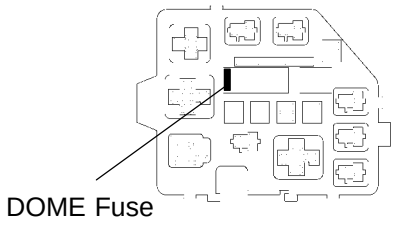

Instrument panel junction block:

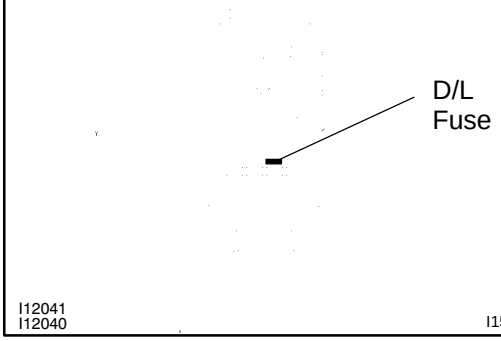

PREPARATION:

(a) Remove the DOME fuse from the engine room junction block.

(b) Remove the D/L fuse from the instrument panel junction block.

CHECK:

Check continuity of the DOME and D/L fuse.

OK:

Continuity

NG → **Check for short in all the harness and components connected to the DOME and DOOR fuse (See attached wiring diagram).**

OK

2	**Check voltage between terminals +B1, +B2 and E of theft deterrent ECU connector.**

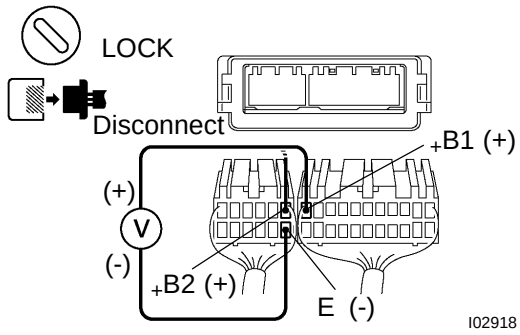

PREPARATION:

(a) Remove the glove compartment door.

(b) Disconnect the theft deterrent ECU connector.

CHECK:

Measure voltage between terminals +B1, +B2 and E of theft deterrent ECU connector.

OK:

Voltage: 10 - 14 V

OK → **Proceed to next circuit inspection shown in problem symptoms table (See page DI-412).**

NG

3	**Check for open in harness and connector between ECU and body ground (See page IN-29).**

NG → **Repair or replace harness or connector.**

OK

Check and repair harness and connector between ECU and battery.

DI02B-15

Engine Hood Courtesy Switch Circuit

CIRCUIT DESCRIPTION

The engine hood courtesy switch is built into the engine hood lock assembly and goes ON when the engine hood is opened and goes OFF when the engine hood is closed.

WIRING DIAGRAM

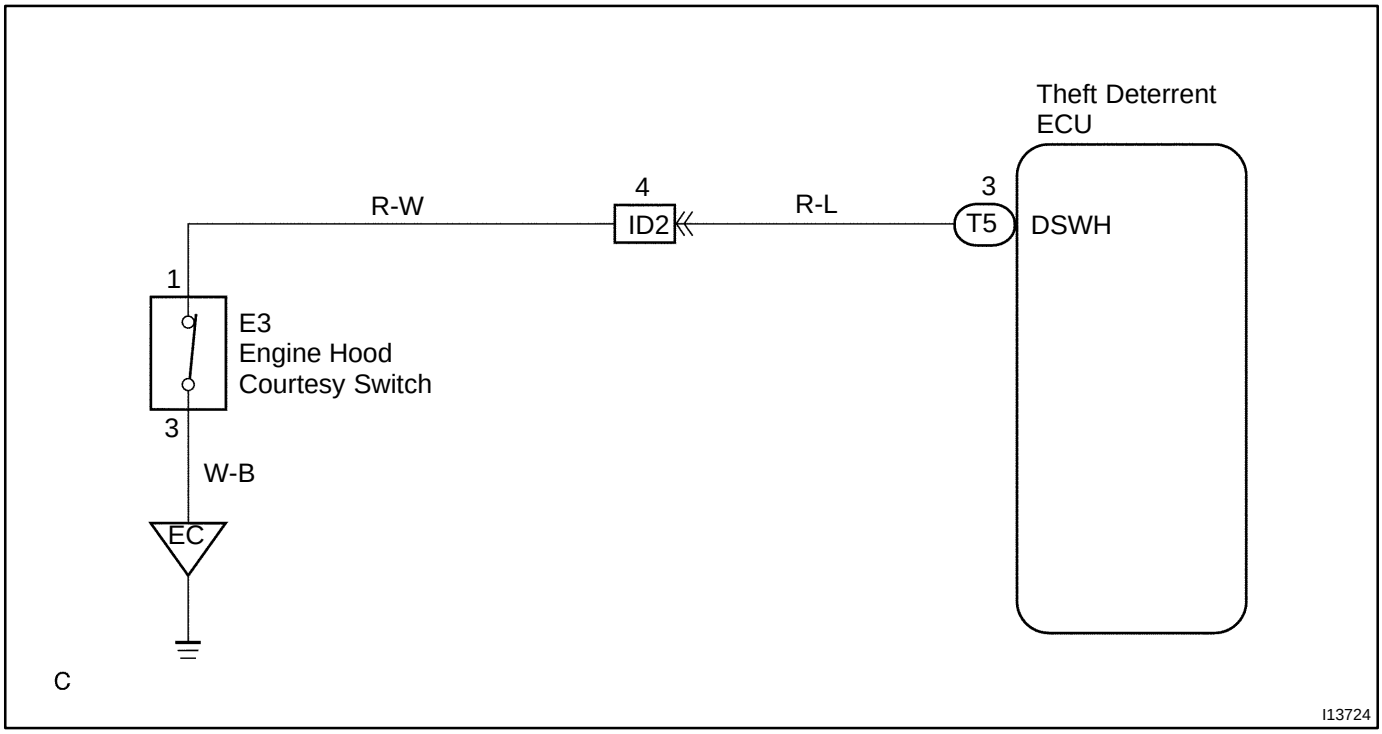

INSPECTION PROCEDURE

1	**Check engine hood courtesy switch.**

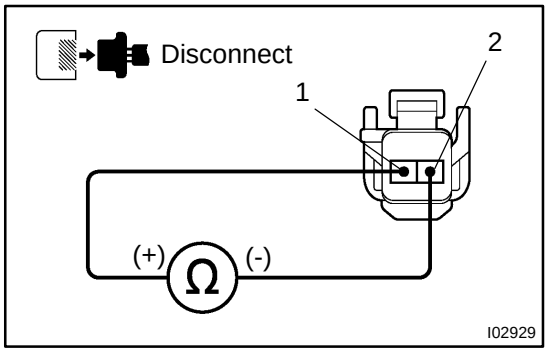

PREPARATION:

(a) Remove the engine hood lock assembly.

(b) Disconnect the engine hood courtesy switch connector.

CHECK:

Check continuity between terminals 1 and 2 when engine hood lock is locked and unlocked.

OK:

Engine hood lock	Tester connection	Specified condition
LOCK	-	No continuity
UNLOCK1.75	1 - 2	Continuity

NG	**Replace engine hood courtesy switch.**

OK

2	**Check harness and connector between theft deterrent ECU and switch, switch and body ground (See page IN-29).**

NG → **Repair or replace harness or connector.**

OK

Check and replace theft deterrent ECU (See page IN-29).

DI020-15

Headlight Control Relay Circuit

CIRCUIT DESCRIPTION

When the theft deterrent system is activated, it causes the Tr in the ECU to switch ON and OFF at approximately 0.4 sec. intervals. This switches the headlight control relay ON and OFF, thus flashing the headlights (See the wiring diagram below).

In this condition, if any of the following operations is done, the Tr in the ECU goes OFF and the headlight control relay switches OFF, thus stopping the headlights flashing:

(1) Unlock the front LH or RH door with a key.
(2) Turn the ignition switch to IG or ON position.
(3) Unlock the doors with the wireless door lock control system.
(4) Wait for approximately 60 seconds.

WIRING DIAGRAM

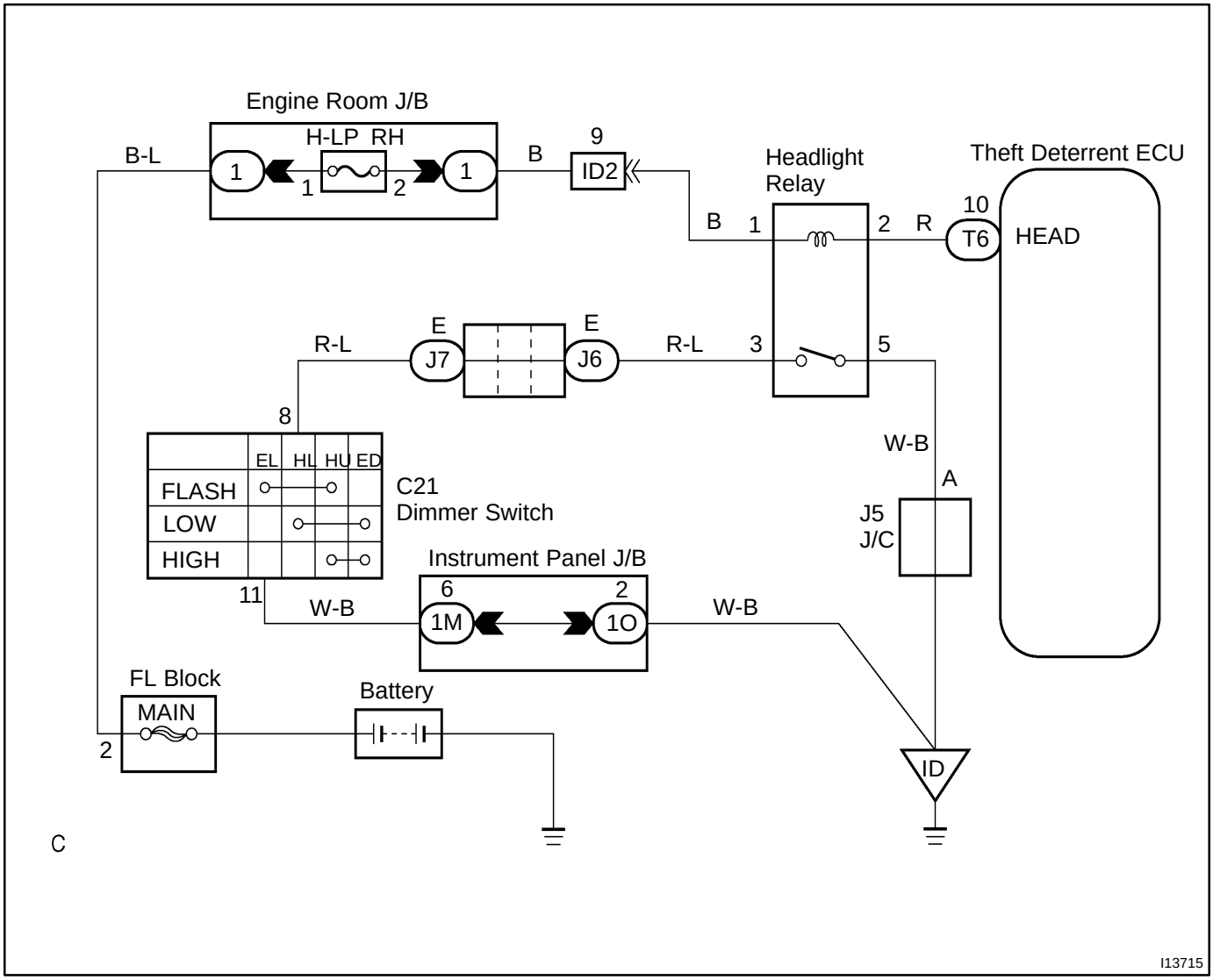

INSPECTION PROCEDURE

HINT:

The flow chart below is based on the premise that the headlights light up normally whenever the light control switch is operated. If headlight operation is not normal when the light control switch is operated, proceed to troubleshooting on page BE-2 .

1	**Check voltage between terminal HEAD of theft deterrent ECU connector and body ground.**

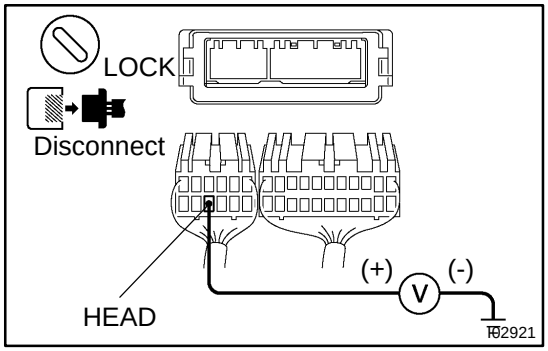

PREPARATION:

(a) Remove the glove compartment door.

(b) Disconnect the theft deterrent ECU connector.

CHECK:

Measure voltage between terminal HEAD of theft deterrent ECU connector and body ground.

OK:

Voltage: 10 - 14 V

NG → **Check and repair harness and connector between theft deterrent ECU and headlight control relay (See page IN-29).**

OK

Check and replace theft deterrent ECU.

DI01Z-15

Horn Relay Circuit

CIRCUIT DESCRIPTION

When the theft deterrent system is activated, it causes the Tr in the ECU to switch ON and OFF in approximately 0.4 sec. cycles. This switches the horn relay ON and OFF, thus the horns blow (See the wiring diagram below).

In this condition, if any of the following operations is done, the Tr in the ECU goes OFF and the horn relay switches OFF, thus stopping the horns from blowing:

(1) Unlock the front LH or RH door with key.
(2) Turn the ignition switch to IG or ON position.
(3) Unlock the doors with the wireless door lock control system.
(4) Wait for approximately 60 seconds.

WIRING DIAGRAM

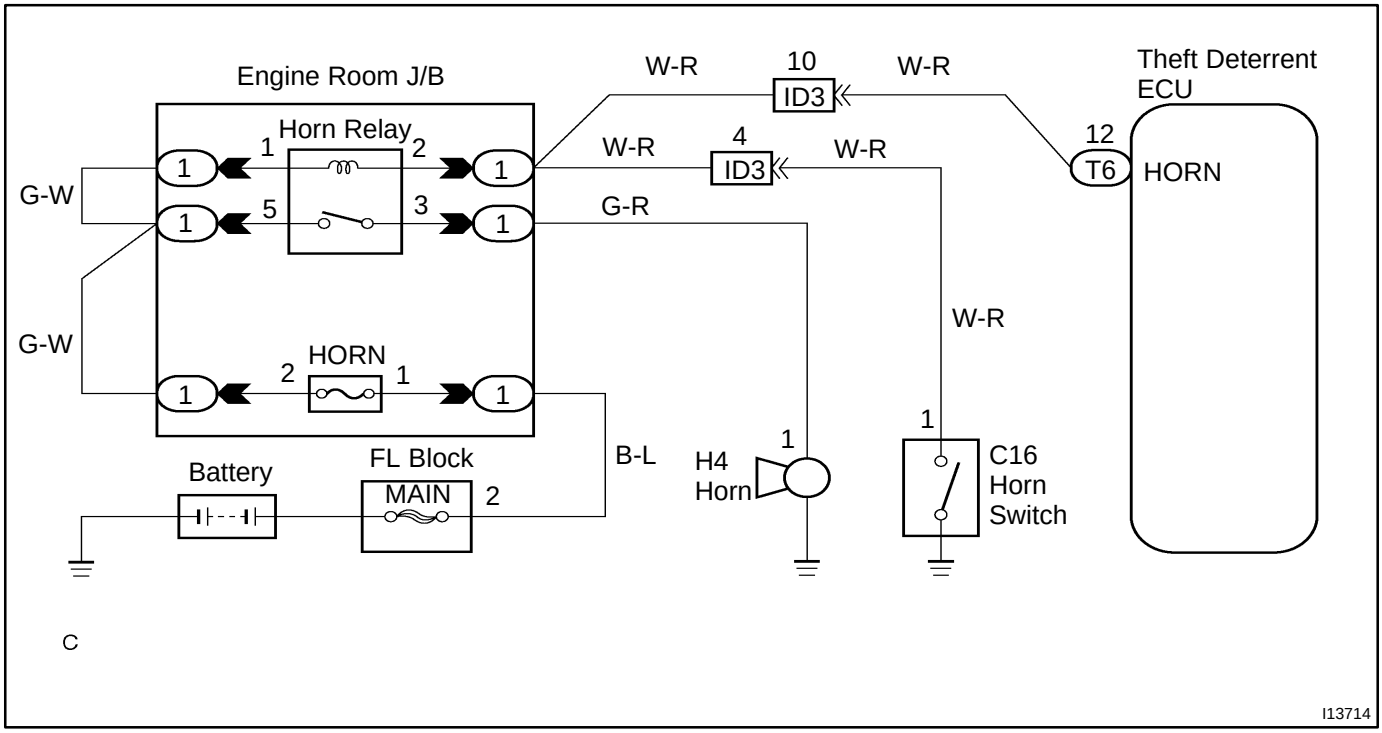

INSPECTION PROCEDURE

HINT:

The flow chart below is based on the premise that the horns blow normally whenever the horn switch is operated. If horn operation is not normal when the horn switch is operated, check the horn switch.

1	**Check voltage between terminal HORN of theft deterrent ECU connector and body ground.**

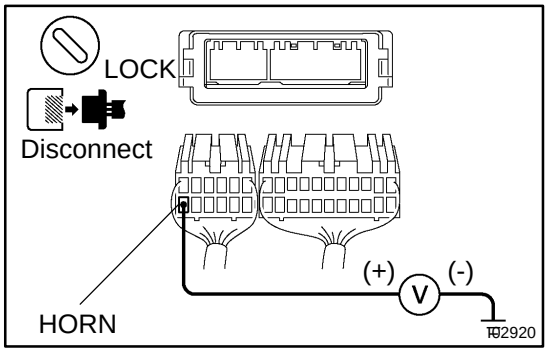

PREPARATION:

(a) Remove the glove compartment door.

(b) Disconnect the theft deterrent ECU connectors.

CHECK:

Measure voltage between terminal HORN of theft deterrent ECU connector and body ground.

OK:

Voltage: 10 - 14 V

NG → **Check and repair harness and connector between theft deterrent ECU and horn relay.**

OK

Check and replace theft deterrent ECU.

THEFT DETERRENT SYSTEM

DI01P-12

HOW TO PROCEED WITH TROUBLESHOOTING

HINT:

Troubleshooting of the theft deterrent system is based on the premise that the door lock control system is operating normally. Accordingly, before troubleshooting the theft deterrent system, first make certain that the door lock control system is operating normally.

For troubleshooting use a volt/ohm meter.

Be sure to use troubleshooting procedure appropriate to the diagnostic tool being used.

Perform troubleshooting in accordance with the procedure on the following page.

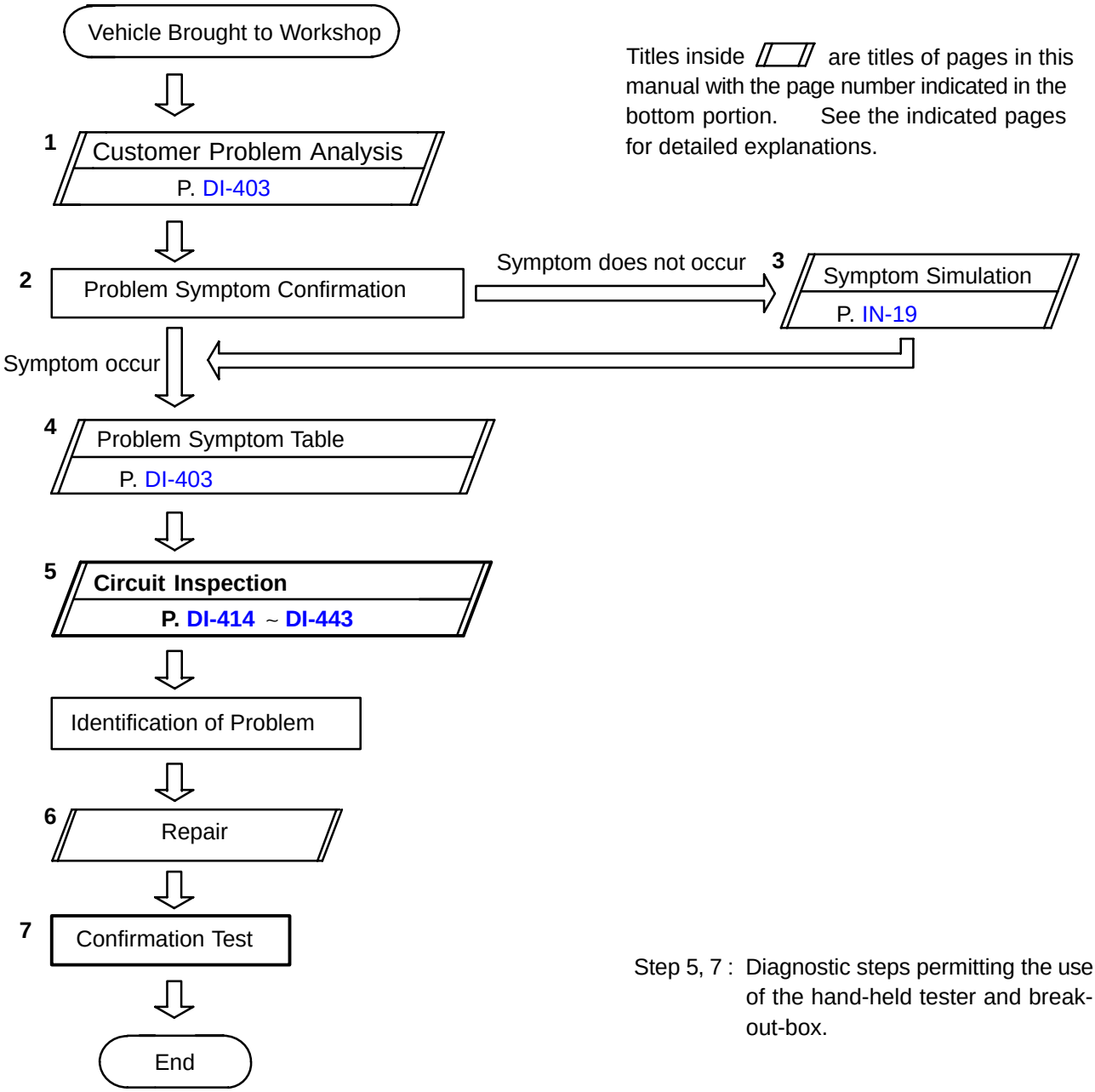

Titles inside ▱ are titles of pages in this manual with the page number indicated in the bottom portion. See the indicated pages for detailed explanations.

Step 5, 7 : Diagnostic steps permitting the use of the hand-held tester and break-out-box.

DI022-17

Ignition Switch Circuit

CIRCUIT DESCRIPTION

When the ignition switch is turned to the ACC position, battery positive voltage is applied to the terminal ACC of the ECU. Also, if the ignition switch is turned to the ON position, battery positive voltage is applied to the terminals ACC and IG of the ECU. When the battery positive voltage is applied to the terminal ACC of the ECU while the theft deterrent system is activated, the warning stops. Furthermore, power supplied from the terminals ACC and IG of the ECU is used as power for the door courtesy switch, and position switch, etc.

WIRING DIAGRAM

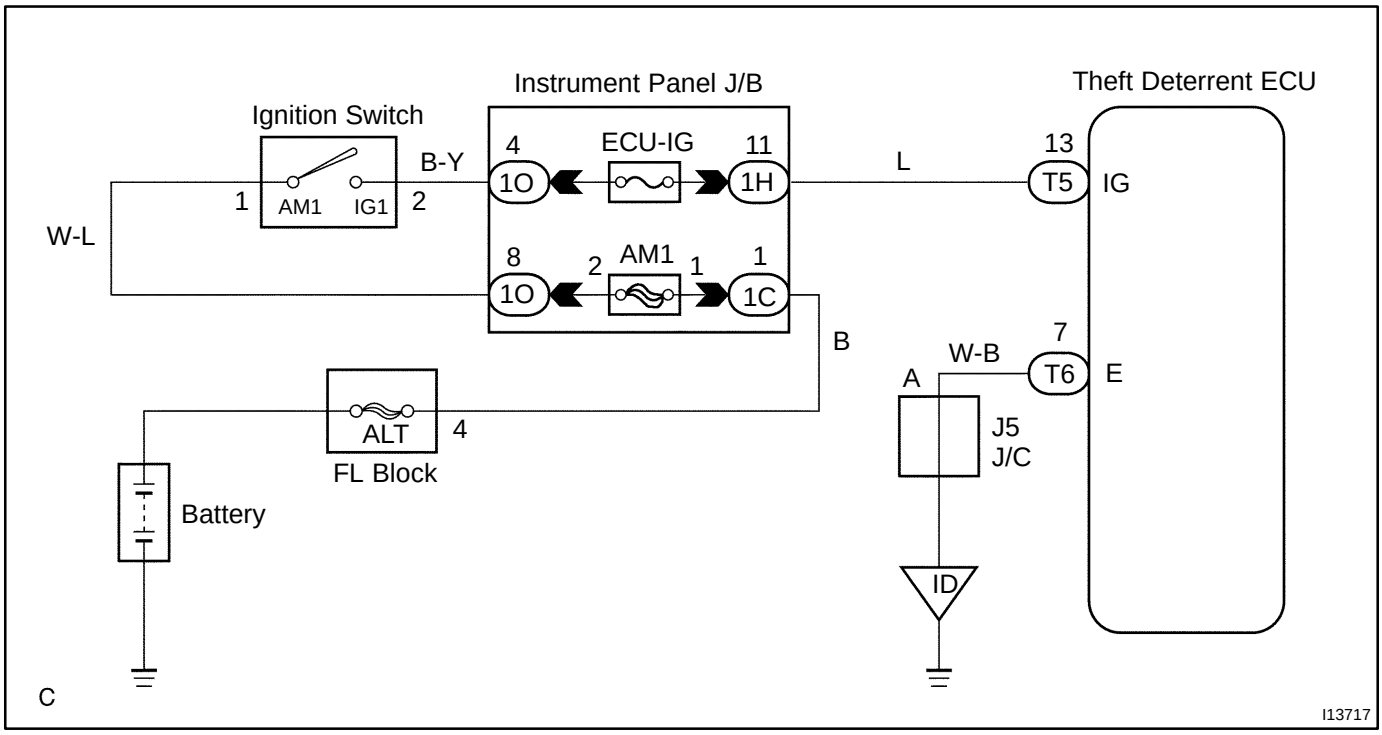

INSPECTION PROCEDURE

1	Check AM1 and ECU-IG fuses.

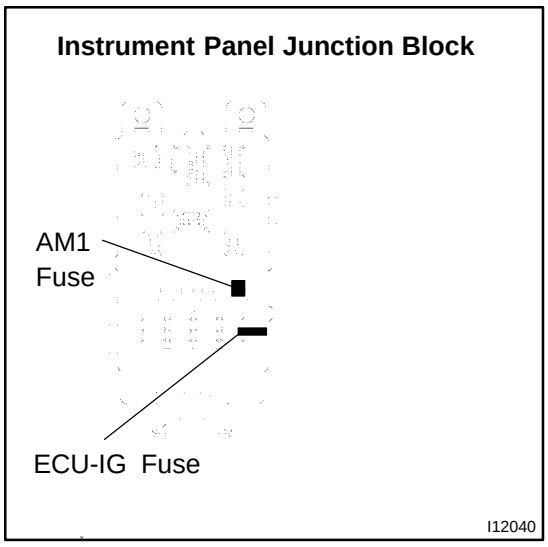

PREPARATION:

(a) Remove the fuse box opening cover.

(b) Remove the AM1 and ECU-IG fuses from the instrument panel junction block.

CHECK:

Check continuity of the AM1 and ECU-IG fuses.

OK:

Continuity

NG → **Check for short in all the harness and components connected to the AM1 and ECU-IG fuses (See attached wiring diagram).**

OK

2	Check voltage between terminals IG of theft deterrent ECU and body ground.

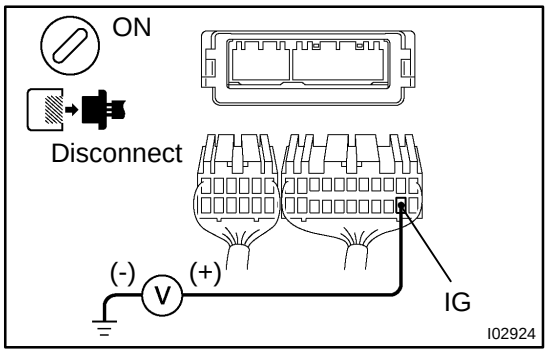

PREPARATION:

(a) Remove the glove compartment door.

(b) Disconnect the theft deterrent ECU connectors.

(c) Turn the ignition switch ON.

CHECK:

Measure voltage between terminals IG and ACC of theft deterrent ECU connector and body ground.

OK:

Voltage: 10 - 14 V

NG → **Check and repair harness and connector between theft deterrent ECU and battery (See page IN-29).**

OK

Check and replace theft deterrent ECU.

DI01V-13

CIRCUIT INSPECTION

Indicator Light Circuit

CIRCUIT DESCRIPTION

When the theft deterrent system is preparing to set, this circuit lights up the indicator light. When the system has been set, it continually turns the indicator light ON for 0.75 second and turns it OFF for 1.25 second, thus blinking the indicator light.

WIRING DIAGRAM

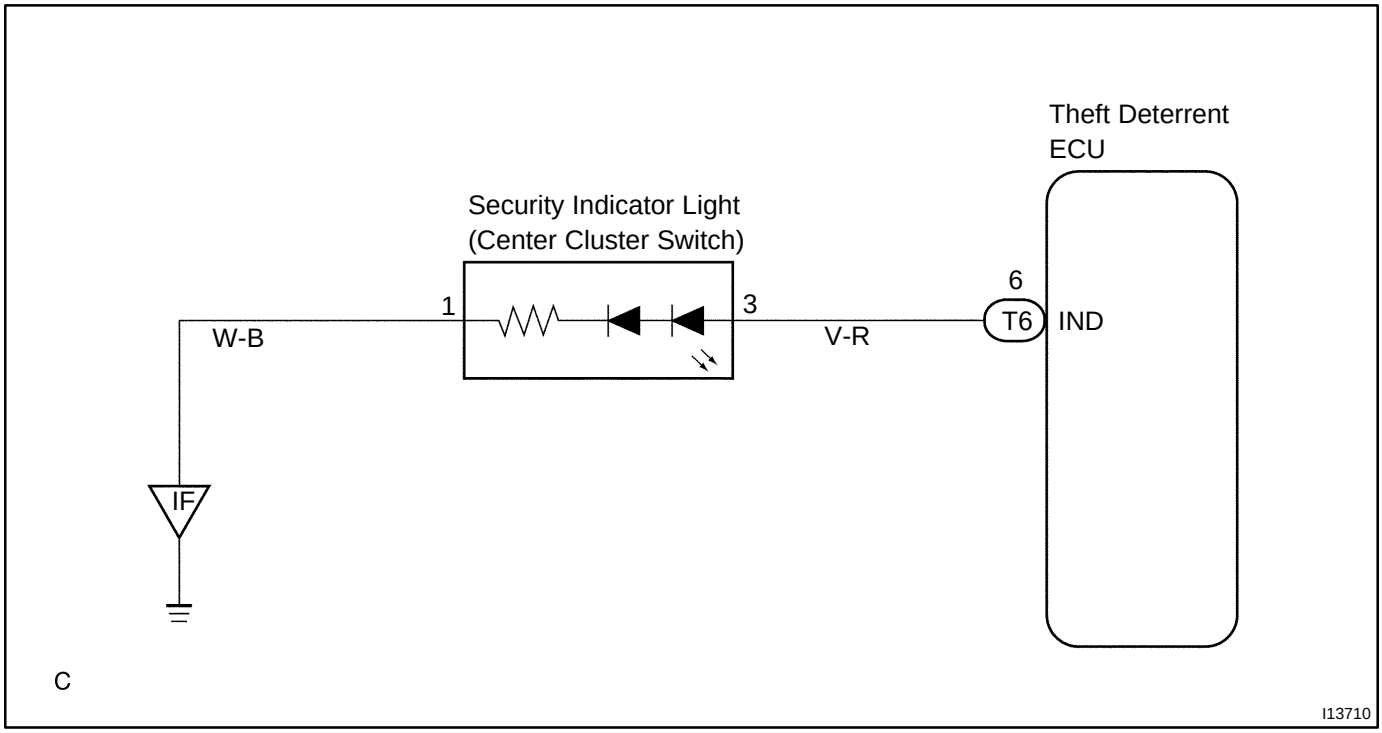

INSPECTION PROCEDURE

1	**Check indicator light.**

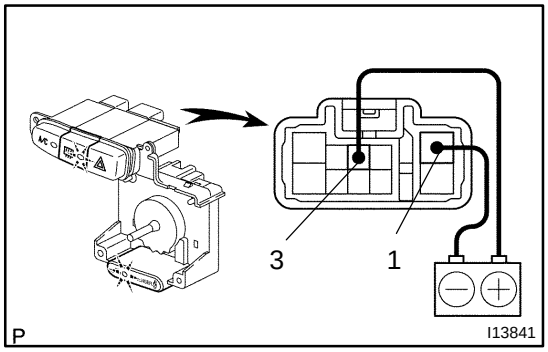

PREPARATION:

Disconnect the indicator light connector.

CHECK:

Connect the positive (+) lead to terminal 3 and the negative (-) lead to terminal 1 of indicator light connector.

OK:

Indicator light comes on.

NG	**Replace indicator light.**

OK

2	**Check harness and connector between theft deterrent ECU and indicator light, indicator light and body ground (See page IN-29).**

NG → **Repair or replace harness or connector.**

OK

Check and replace theft deterrent ECU.*1

*1: When there is a malfunction that the theft deterrent system cannot be set, proceed to the next numbered circuit inspection shown in problem symptoms table (See page DI-412).

DI023-15

Key Unlock Warning Switch Circuit

CIRCUIT DESCRIPTION

The key unlock warning switch goes ON when the ignition key is inserted in the key cylinder and goes OFF when the ignition key is removed.
The ECU operates the key confinement prevention function while the key unlock warning switch is ON.

WIRING DIAGRAM

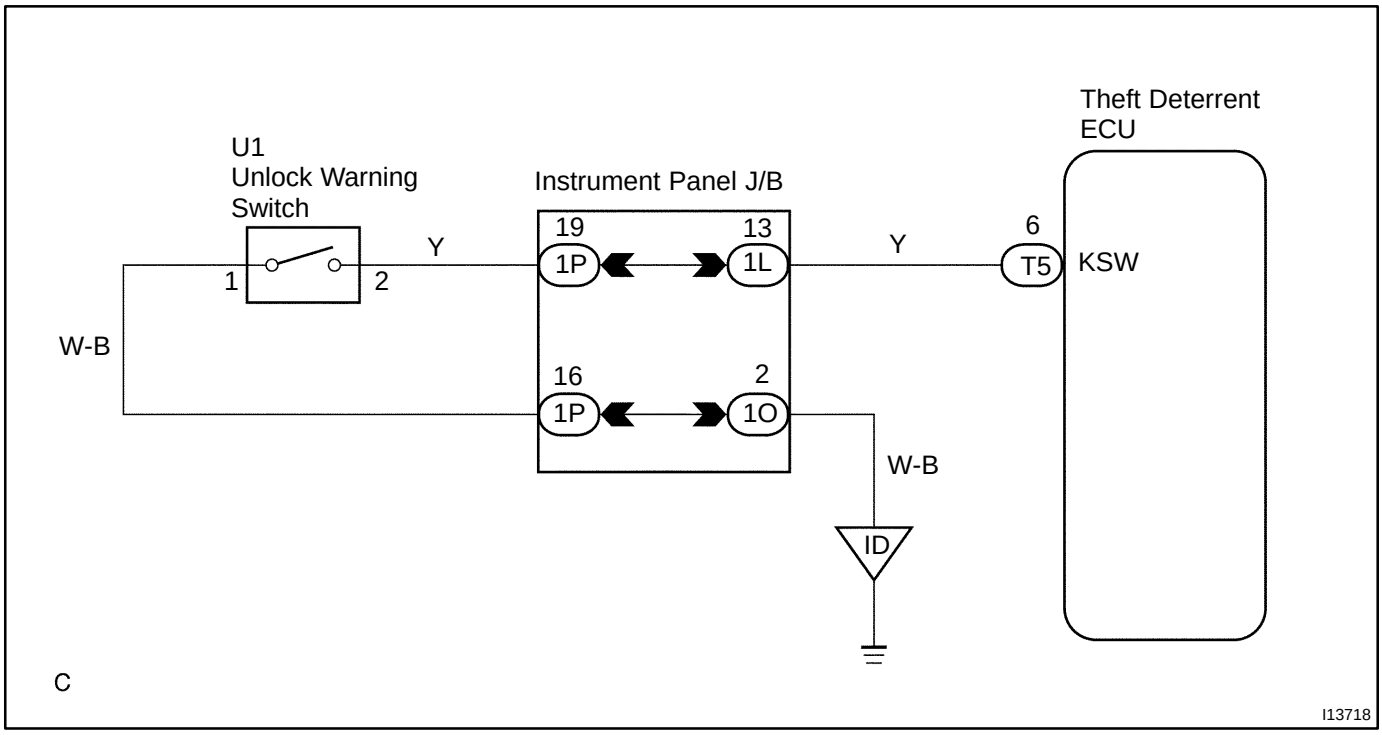

INSPECTION PROCEDURE

1	**Check key unlock warning switch.**

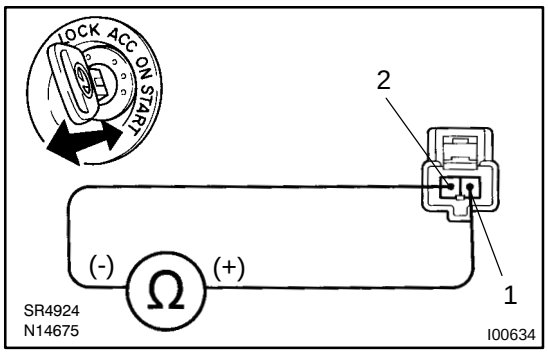

PREPARATION:

Disconnect the key unlock warning switch connector.

CHECK:

Check continuity between terminal 1 and 2 of key unlock warning switch connector, when the key is inserted into the key cylinder or removed.

OK:

Switch position	Tester connection	Specified condition
ON (Key inserted)	1 - 2	Continuity
OFF (Key removed)	-	No continuity

NG → **Replace key unlock warning switch.**

OK

2	**Check harness and connectors between ECU and key unlock warning switch, key unlock warning switch and body ground (See page IN-29).**

NG → **Repair or replace harness or connector.**

OK

Proceed to next circuit inspection shown in problem symptoms table (See page DI-412).

DI025-08

Luggage Compartment Door Courtesy Switch Circuit

CIRCUIT DESCRIPTION

The luggage compartment door courtesy switch goes ON when luggage compartment door is opened and goes OFF when the luggage compartment door is closed.

WIRING DIAGRAM

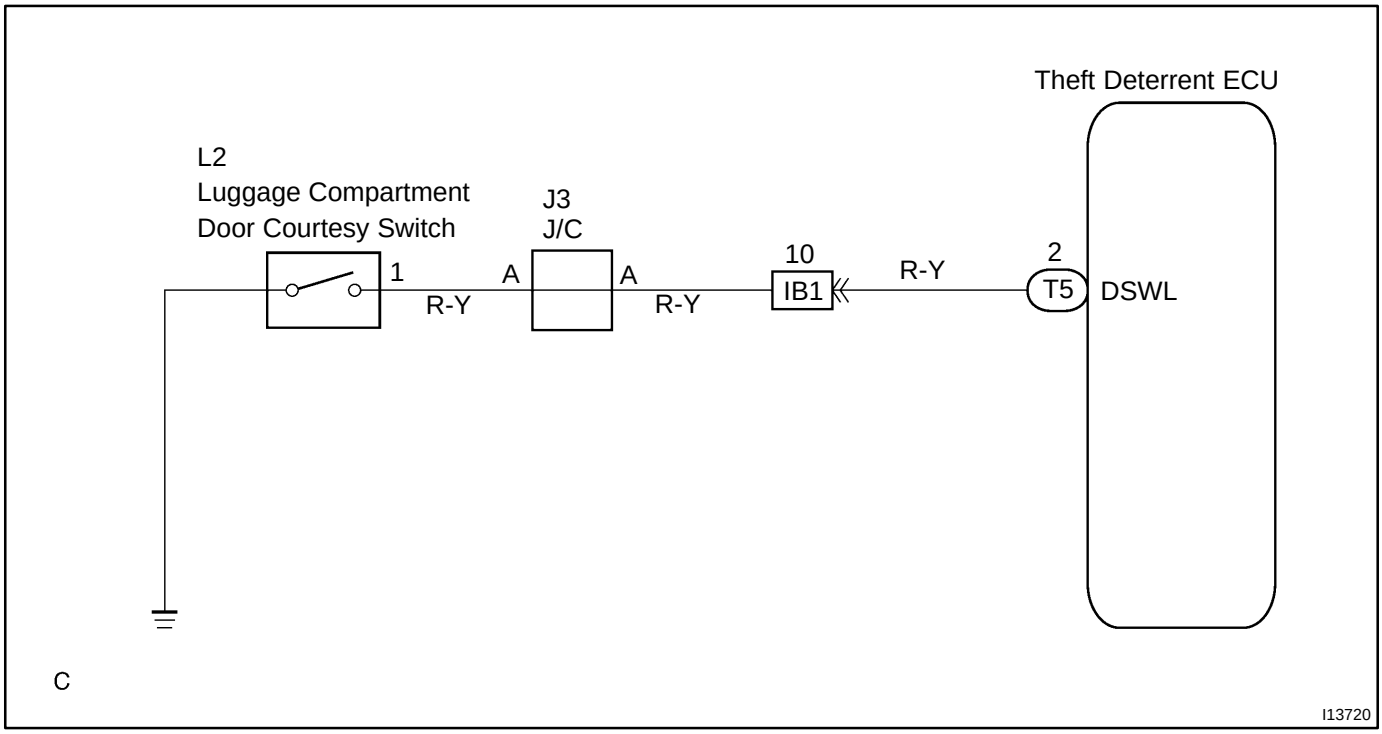

INSPECTION PROCEDURE

1	**Check operation of luggage compartment door courtesy light.**

CHECK:

Check that luggage compartment door courtesy light goes OFF when luggage compartment door courtesy switch is pushed, and comes ON when switch is not pushed.

NG → **Check and repair luggage compartment door courtesy light circuit (See page BE-32).**

OK

2	**Check for open in harness and connector between theft deterrent ECU and luggage compartment door courtesy switch (See page IN-29).**

NG → **Repair or replace harness or connectors.**

OK

Check and replace theft deterrent ECU.*1

*1: When there is a malfunction that the theft deterrent system cannot be set, proceed to the next numbered circuit inspection shown in problem symptoms table (See page DI-412).

DI024-14

Luggage Compartment Door Key Lock and Unlock Switch Circuit

CIRCUIT DESCRIPTION

The luggage compartment door key lock and unlock switch goes ON when the luggage compartment door key cylinder is turned to the unlock side with the key.

WIRING DIAGRAM

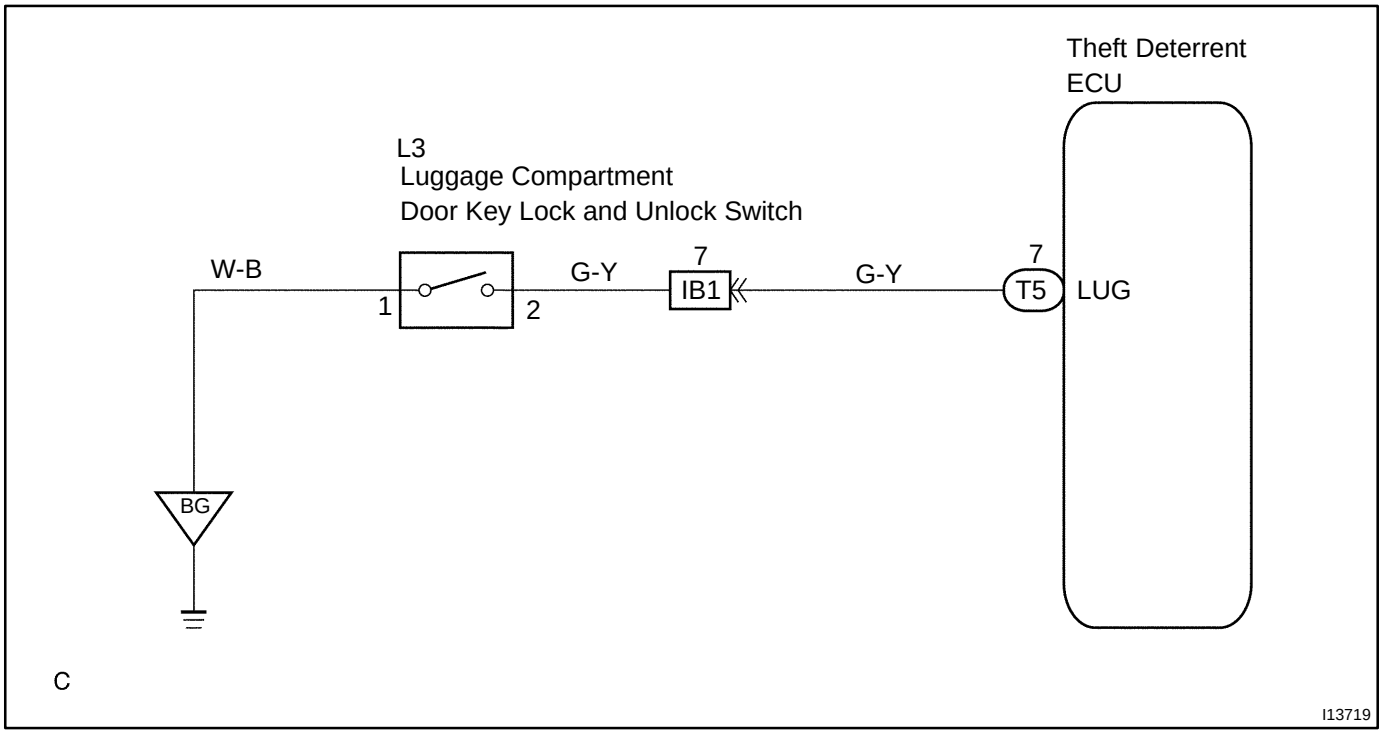

INSPECTION PROCEDURE

1	**Check voltage between terminal 1 of luggage compartment door key lock and unlock switch connector and body ground.**

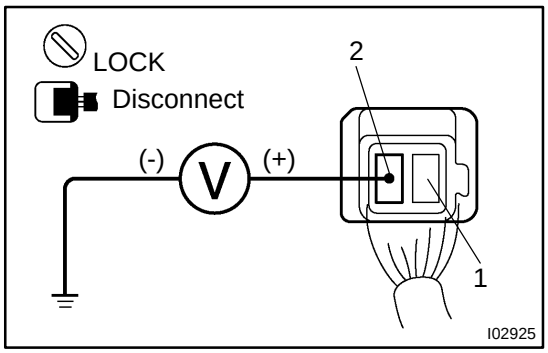

PREPARATION:

(a) Remove the luggage compartment door trim.

(b) Turn the ignition switch ON.

CHECK:

Measure voltage between terminal 1 of luggage compartment door key lock and unlock switch connector and body ground, when the key is turned to the unlock side and not turned.

OK:

Key operation	Voltage
Turned to the unlock side	0 V
Not turned	Battery positive voltage

OK → Check and replace theft deterrent ECU.*1

NG

2	Check luggage compartment door key lock and unlock switch.

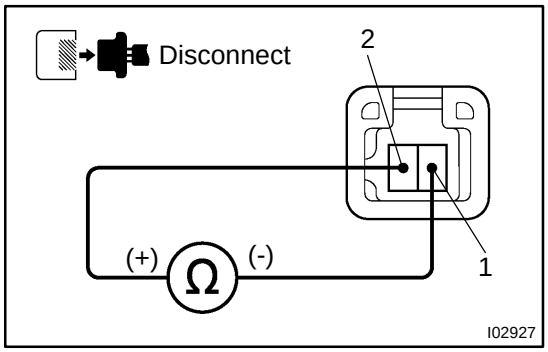

PREPARATION:
Disconnect the luggage compartment door key lock and unlock switch connector.

CHECK:
Check continuity between terminals 1 and 2, when the key is turned to the unlock side and not turned.

OK:

Key operation	Tester connection	Specified condition
Turned to unlock	1 - 2	Continuity
Not turned	-	No continuity

NG → Repair or replace luggage compartment door key lock and unlock switch.

OK

3	Check harness and connector between theft deterrent ECU and key lock and unlock switch, key lock and unlock switch and body ground (See page IN-29).

NG → Repair or replace harness or connector.

OK

Check and replace theft deterrent ECU.

*1: When there is a malfunction that the theft deterrent system cannot be set, proceed to the next numbered circuit inspection shown in problem symptoms table (See page DI-412).

DI01S-06

PARTS LOCATION

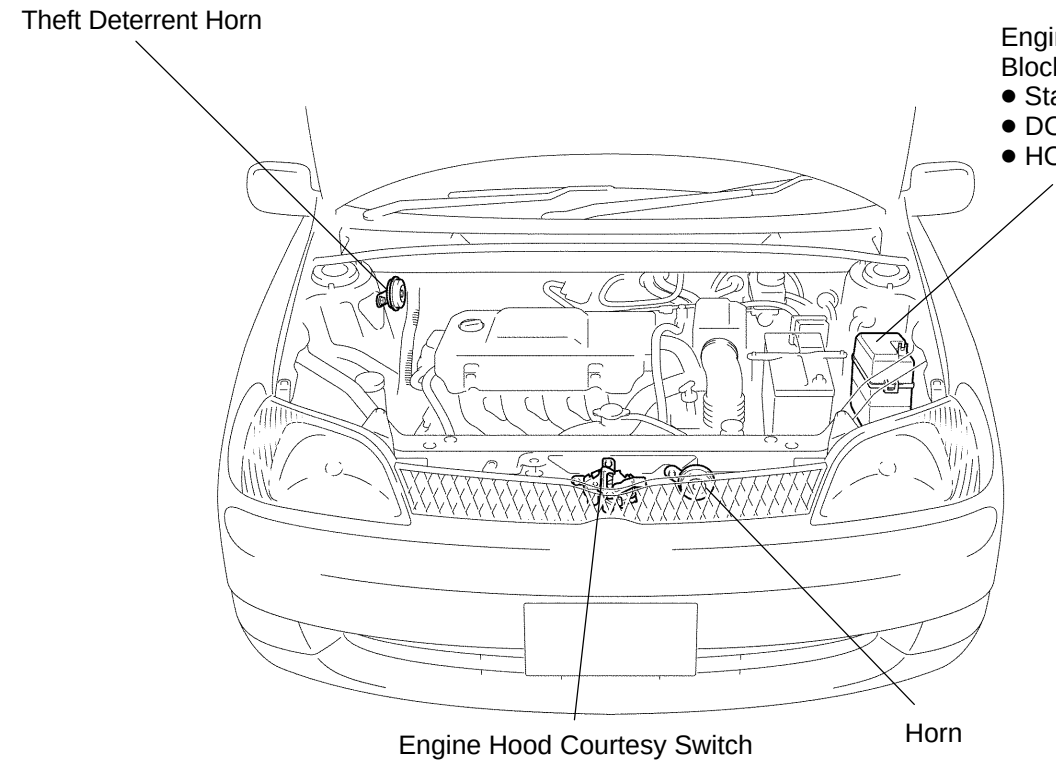

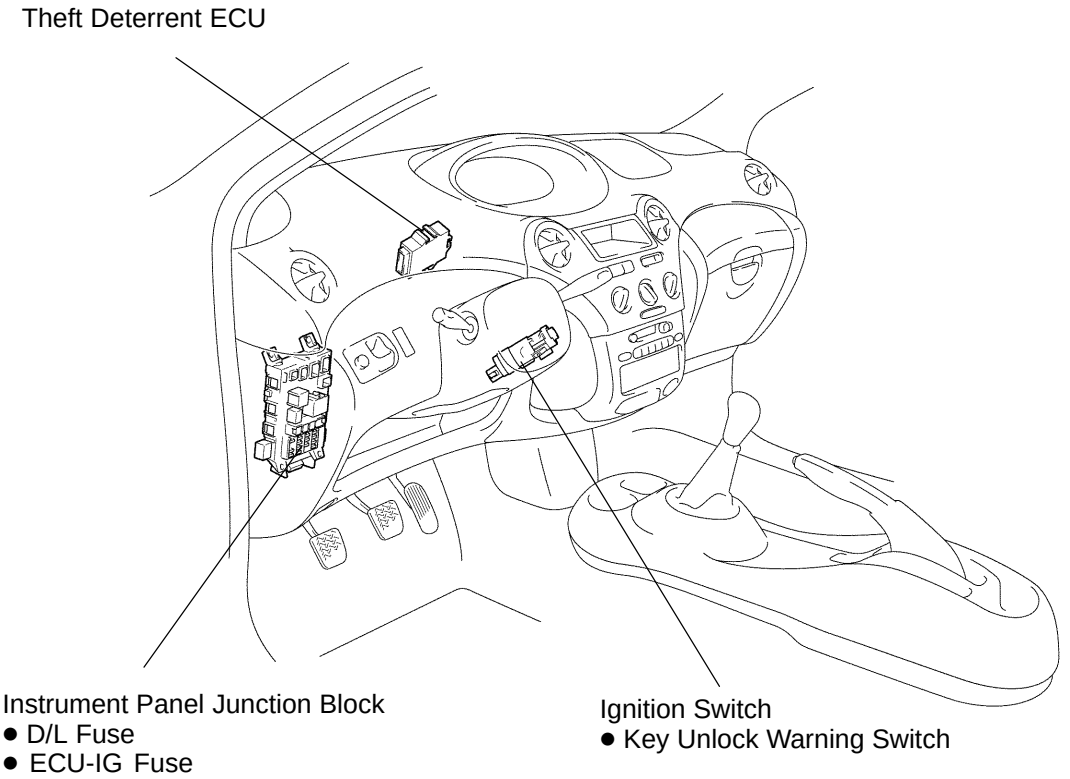

P

I14570

2 door models

Door Lock Assembly
- Door Lock Motor
- Door Unlock Detection Switch
- Door Key Lock and Unlock Switch

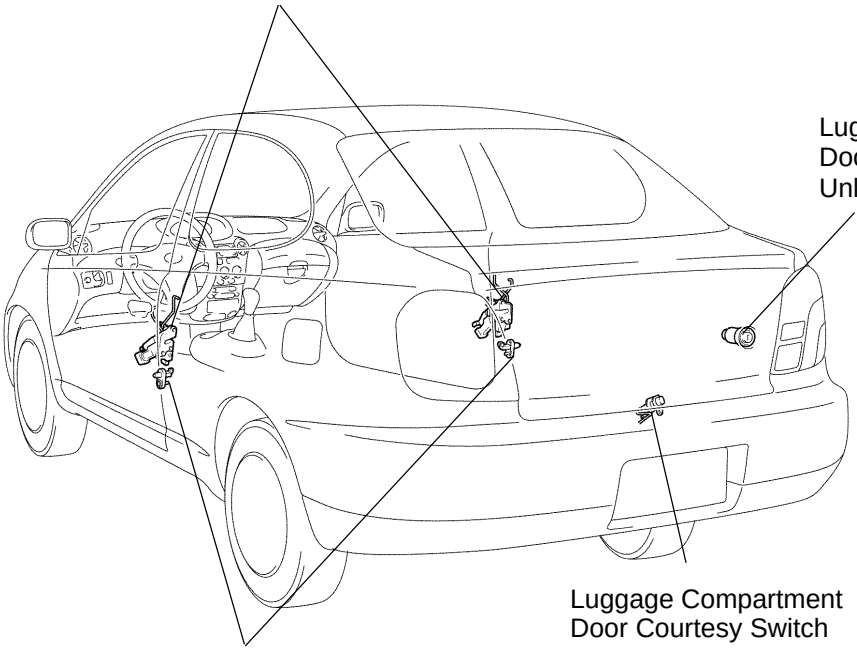

4 door models

Door Lock Assembly
- Door Lock Motor
- Door Unlock Detection Switch
- Door Key Lock and Unlock Switch

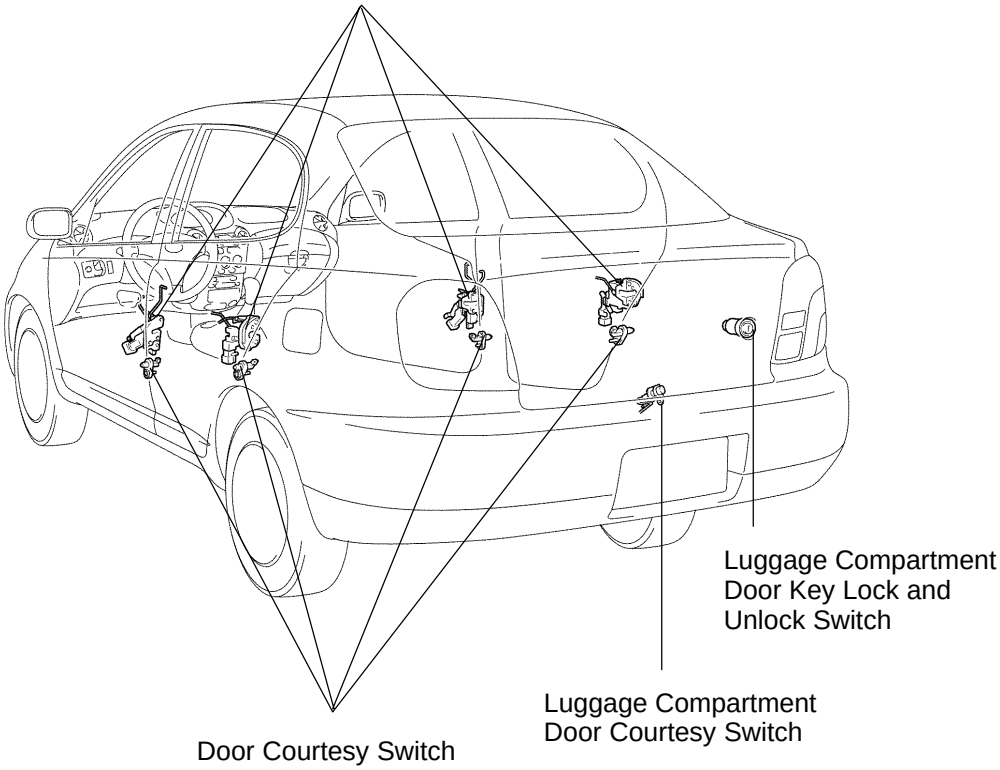

P

I14571

DI4DL-04

PRE-CHECK

1. OUT LINE OF THEFT DETERRENT SYSTEM

When the theft deterrent system detects any theft, it informs people around with flashing lights and sound.

2. PARTIAL CHANGE OF SYSTEM SETTING METHOD

There are 4 conditions in this system which are disarmed state, arming preparation, armed state and alarm sounding.

(1) Disarmed state
- When the alarming function does not operate.
- When theft deterrent function is not performed.

(2) Arming preparation
- Time until transferring to armed state.
- Theft deterrent function is not performed.

(3) Armed state
When theft deterrent function is possible.

(4) Alarm sounding:
In this condition, once theft is detected, it is informed using light and sound to people around the vehicle.
Refer to the table for alarming method or time.

Alarming method	Horn
	Security horn
	Headlight
	Taillight
Alarming time	60 seconds
Alarming output	Continuous 0.4 secs.: (ON) 0.4 secs.: (OFF)

HINT:
In the arming condition when either of doors is unlocked with key not in the key cylinder, force lock signal is output.

3. ACTIVE ARMING MODE

Disarming condition (Key not inserted in ignition cylinder.)

Any of the following conditions is met
- When all doors and engine hood are closed, lock all the doors using a key.
- When all doors and engine hood are closed, open and close either of doors and engine hood then close and lock all doors and engine hood.

Disarming preparation condition

Any of the following conditions is met ● Close and open either of all doors and engine hood. ● Lock and unlock either of doors. ● Insert a key into the ignition key cylinder. ● Reconnect the battery.	Any of the following conditions is met ● 30 seconds elapse when the engine hood is closed and all doors are locked.

Arming condition

Any of the following conditions is met ● Unlock the locked doors using the key. ● Insert the key into the ignition key cylinder and turn the ignition key ON.	Any of the following conditions is met ● Either of closed doors opens. ● Either of locked doors is unlocked by any operation other than key or wireless remote function. ● The closed engine hood is opened. ● The battery is reconnected.

Alarming condition

In this mode, once theft is detected, it is informed using light and sound to people around the vehicle. The alarming time described above passes.	Any of the following conditions is met ● Unlock the locked doors using the key. ● Insert the key into the ignition key cylinder and turn the ignition key ON.

Indicator light output:

Condition	Indicator light
Disarming condition	OFF
Arming preparation condition	ON
Arming condition	Flashing
Alarming condition	ON

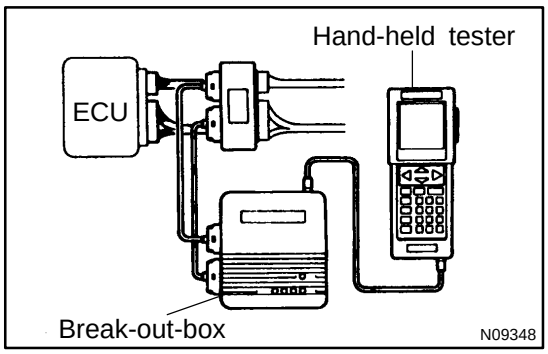

4. ECU TERMINAL VALUES MEASUREMENT BY USING BREAK-OUT-BOX AND HAND-HELD TESTER

(a) Hook up the break-out-box and hand-held tester to the vehicle.

(b) Read the ECU input/ output values by following the prompts on the tester screen.

(c) Please refer to the hand-held tester has a ”Snapshot” function. This records the measured data and is effective in the diagnosis of intermittent problems.

DI616-02

PROBLEM SYMPTOMS TABLE

Proceed to the reference page shown in the matrix chart below for each malfunction symptom and trouble-shoot for each circuit.

HINT:

Troubleshooting of the theft deterrent system is based on the premise that the door lock control system is operating normally. Accordingly, before troubleshooting the theft deterrent system, first make certain that the door lock control system is operating normally.

Symptom	Suspect Area	See page
The theft deterrent system cannot be set	3. Indicator light circuit 4. ECU power source circuit 5. Key unlock warning switch circuit 6. Luggage compartment door key lock and unlock switch circuit 7. Luggage compartment door courtesy switch circuit 8. Door key lock and unlock switch circuit 9. Door courtesy switch circuit 10. Door unlock detection switch circuit 11. Engine hood courtesy switch circuit	DI-414 DI-418 DI-431 DI-433 DI-435 DI-437 DI-441 DI-439 DI-443
The indicator light does not blink when system is set.	Indicator light circuit	DI-414
When the system is set (The system does not operate when the rear door is unlocked).	Door unlock detection switch circuit	DI-439
When the system is set (The system does not operate when the luggage compartment door is opened by a method other than the key).	Luggage compartment door courtesy switch circuit	DI-435
When the system is set (The system does not operate when the engine hood is opened).	Engine hood courtesy switch circuit	DI-443
When the system is set (It is not canceled when the ignition key is turned to ACC or ON position.	Ignition switch circuit	DI-429
When the system is set (It still operates when the luggage compartment door is opened with the key.	Luggage compartment door key lock and unlock switch circuit	DI-433
While the system is in warning operation (Horns do not sound).	Horn relay circuit	DI-423
While the system is in warning operation (Theft deterrent horn does not sound).	Theft deterrent horn	DI-421
While the system is in warning operation (The starter cut is not cut off).	Starter relay circuit	DI-416
While the system is in warning operation (Headlights do not flash).	Headlight control relay circuit	DI-425
While the system is in warning operation (Taillights do not flash).	Taillight control relay circuit	DI-427
While the system is in warning operation (The door lock is not locked).	Door unlock detection switch circuit	DI-439
System is still set even when a rear door is open	Door courtesy switch circuit	DI-441
Even when the system is not set (Horns sound).	Horn relay circuit	DI-423
Even when the system is not set (Theft deterrent horn sounds).	Theft deterrent horn	DI-421

Even when the system is not set (Headlights stay on).	Headlight control relay circuit	DI-425
Even when the system is not set (Taillights stay on).	Taillight control relay circuit	DI-427

DI3B5-03

Starter Relay Circuit

CIRCUIT DESCRIPTION

When the theft deterrent system is activated, contact (a) in the ECU becomes open, creating an open circuit in terminal SRLY circuit and making the starter inoperative (starter cut).
In this condition, if one of the following operations is done, the contact (a) in the ECU is grounded, thus canceling the starter cut:

(1) Unlock the front LH or RH door with key.
(2) Unlock the doors with the wireless door lock control system.

WIRING DIAGRAM

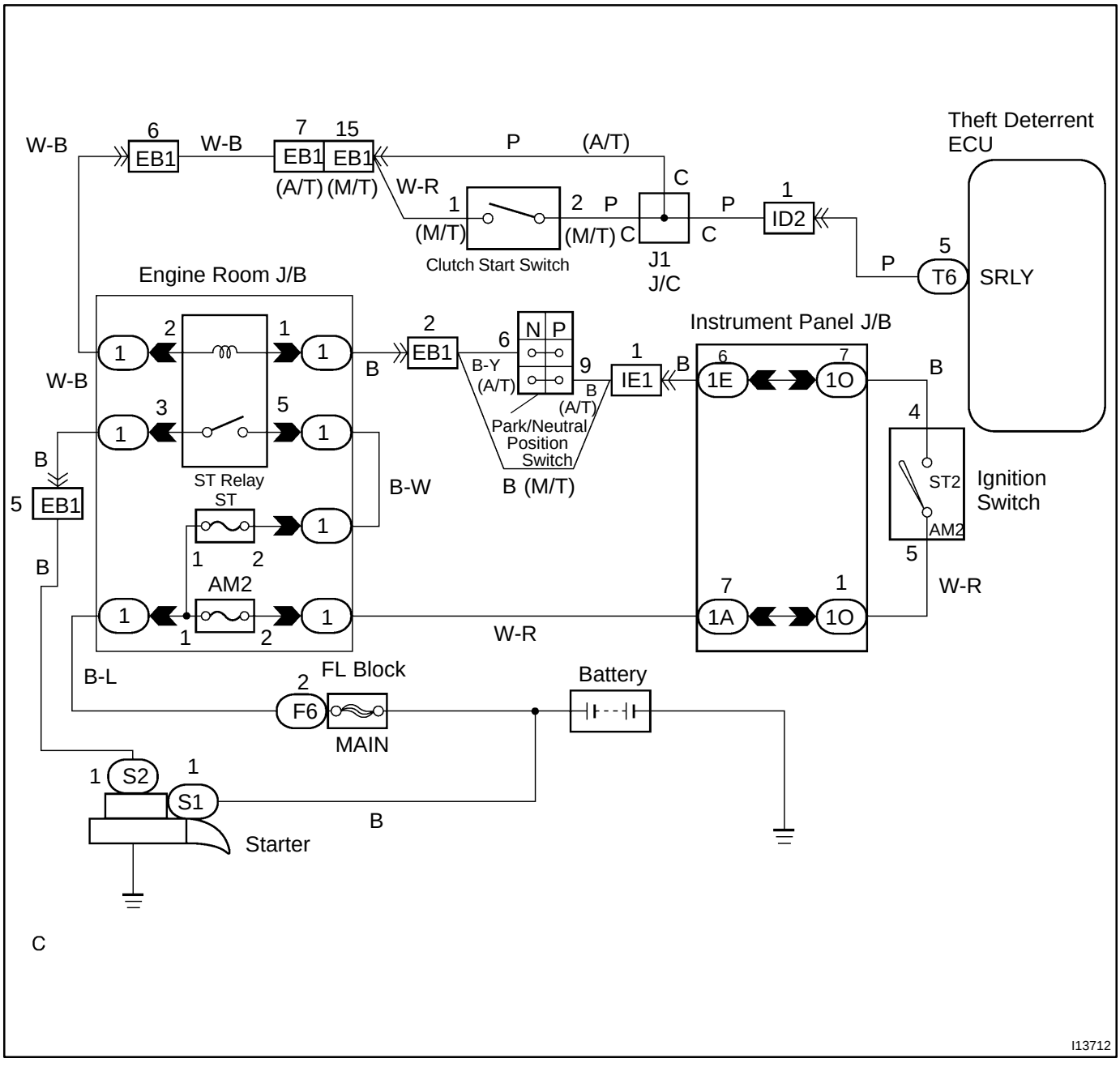

INSPECTION PROCEDURE

HINT:
This troubleshooting is based on the premise that engine cranking occurs.
If the engine does not crank, proceed to the engine troubleshooting on DI-1 .

1	**Check voltage between terminal SRLY of theft deterrent ECU connector and body ground.**

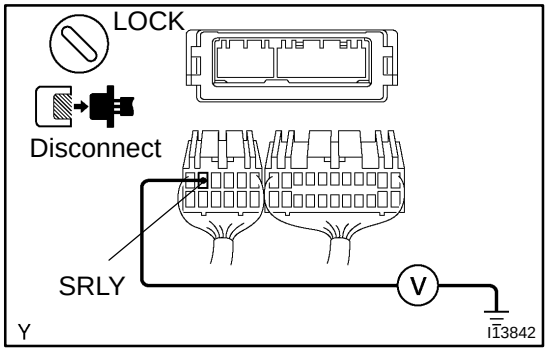

PREPARATION:
(a) Disconnect the theft deterrent ECU connector.
(b) Transmission in neutral position.

CHECK:
Measure voltage between terminal SRLY of theft deterrent ECU connector and body ground, when ignition switch is turned to ST position.

OK:
Voltage: 10 - 14 V

OK → **Check and repair theft deterrent ECU.**

NG

Check and repair harness and connector between starter and theft deterrent ECU (See page IN-29).

DI021-18

Taillight Control Relay Circuit

CIRCUIT DESCRIPTION

When the theft deterrent system is activated, it causes the Tr in the ECU to switch ON and OFF at approximately 0.4 sec. intervals. This switches the taillight control relay ON and OFF, thus flashing the taillights (See the wiring diagram below).

In this condition, if any of the following operations is done, the Tr in the ECU goes OFF and the taillight control relay switches OFF, thus stopping the taillights flashing:

(1) Unlock the front LH or RH door with a key.
(2) Turn the ignition switch to IG or ON position.
(3) Unlock the doors with the wireless door lock control system.
(4) Wait for approximately 60 seconds.

WIRING DIAGRAM

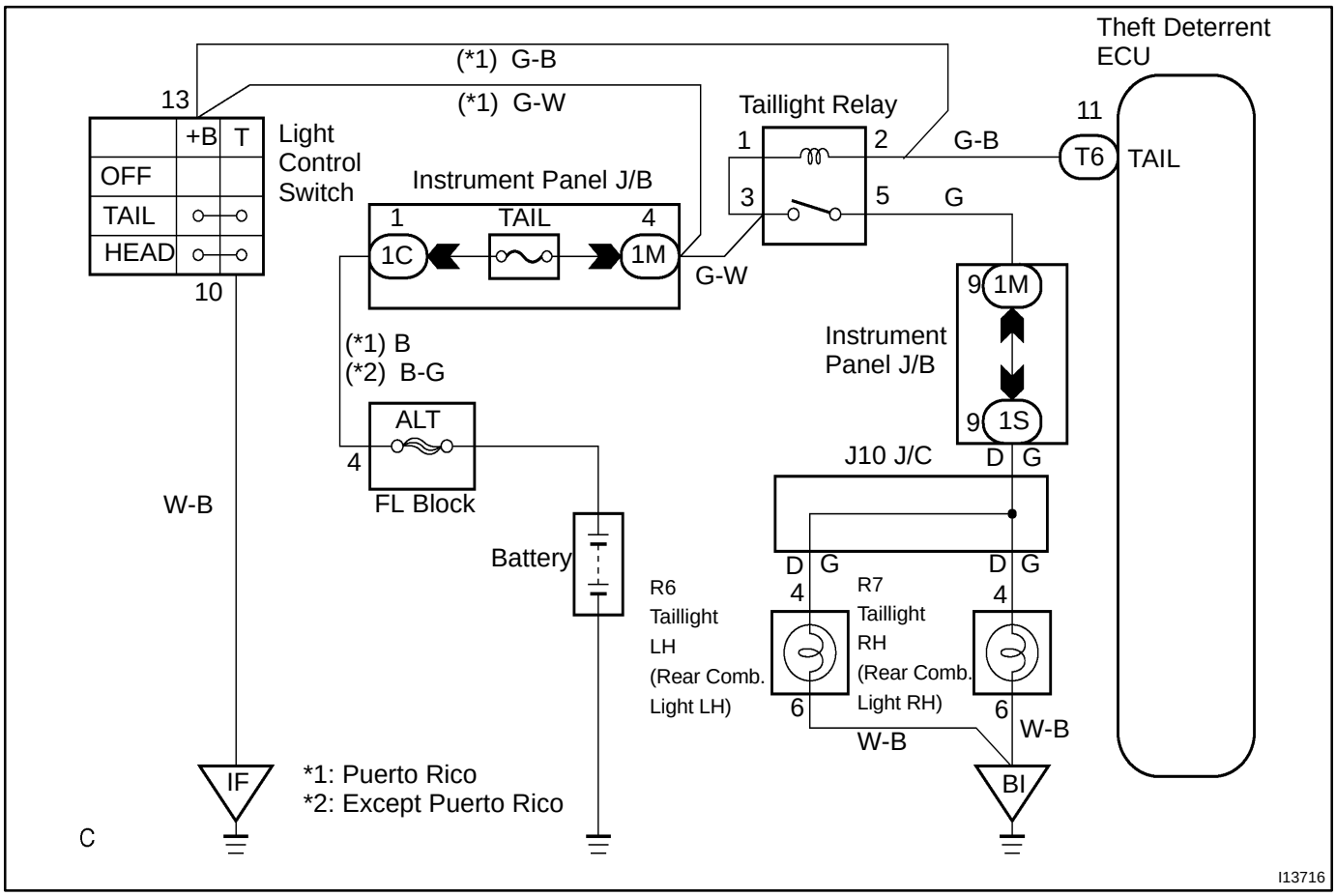

INSPECTION PROCEDURE

HINT:

The flow chart below is based on the premise that the taillights light up normally whenever the light control switch is operated. If taillight operation is not normal when the light control switch is operated, proceed to troubleshooting on page BE-2 .

1	**Check voltage between terminal TAIL of theft deterrent ECU connector and body ground.**

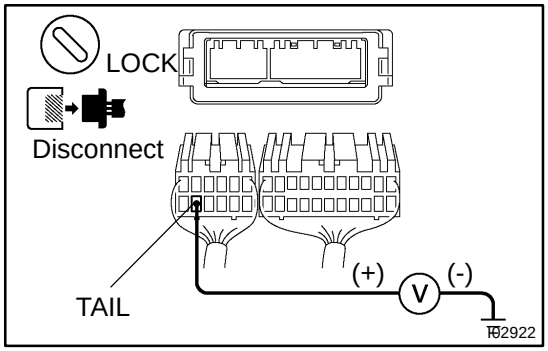

PREPARATION:

(a) Remove the glove compartment door.

(b) Disconnect the theft deterrent ECU connector.

CHECK:

Measure voltage between terminal TAIL of theft deterrent ECU connector and body ground.

OK:

Voltage: 10 - 14 V

NG → **Check and repair harness and connector between theft deterrent ECU and taillight control relay (See page IN-29).**

OK

Check and replace theft deterrent ECU.

DI1AH-17

TERMINALS OF ECU

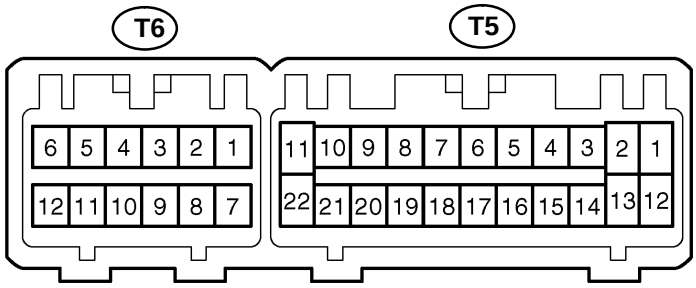

I01920

Symbols (Terminals No.)	Wiring Color	Condition	STD Value
DSWL ↔ E (T5-2 ↔ T6-7)	R-Y ↔ W-B	Luggage compartment door courtesy switch ”ON” (Luggage compartment door opened)	Below 1 Ω
		Luggage compartment door courtesy switch ”OFF” (Luggage compartment door closed)	1 MΩ or higher
DSWH ↔ E (T5-3 ↔ T6-7)	R-L ↔ W-B	Engine hood courtesy switch ”ON” (Engine hood opened)	Below 1 Ω
		Engine hood courtesy switch ”OFF” (Engine hood closed)	1 MΩ or higher
DSWD ↔ E (T5-4 ↔ T6-7)	R-W ↔ W-B	Door courtesy switch ”ON” (Driver’s door opened)	Below 1 Ω
		Door courtesy switch ”OFF” (Driver’s door Closed)	1 MΩ or higher
DSWP ↔ E (T5-5 ↔ T6-7)	R-W ↔ W-B	Door courtesy switch ”ON” (Passenger’s door opened)	Below 1 Ω
		Door courtesy switch ”OFF” (Passenger’s door closed)	1 MΩ or higher
KSW ↔ E (T5-6 ↔ T6-7)	Y ↔ W-B	Key unlock warning switch ”ON” (Key inserted)	Below 1 Ω
		Key unlock warning switch ”OFF” (Key removed)	1 MΩ or higher
LUG ↔ E (T5-7 ↔ T6-7)	G-Y ↔ W-B	Luggage compartment door key lock and unlock switch ”ON”	Below 1 Ω
		Luggage compartment door key lock and unlock switch ”OFF”	1 MΩ or higher
L2 ↔ E (T5-8 ↔ T6-7)	BR-Y ↔ W-B	Door key lock and unlock switch ”LOCK” (Driver’s and passenger’s door)	Below 1 Ω
		Door key lock and unlock switch ”UNLOCK” (Driver’s and passenger’s door)	1 MΩ or higher
UL3 ↔ E (T5-9 ↔ T6-7)	Y-B ↔ W-B	Door key lock and unlock switch ”UNLOCK” (Driver’s door)	Below 1 Ω
		Door key lock and unlock switch ”LOCK” (Driver’s door)	1 MΩ or higher
UL2 ↔ E (T5-10 ↔ T6-7)	G-B ↔ W-B	Door key lock and unlock switch ”UNLOCK” (passenger’s door)	Below 1 Ω
		Door key lock and unlock switch ”LOCK” (passenger’s door)	1 MΩ or higher
+B1 ↔ Body ground (T5-11 ↔ Body ground)	L-Y ↔ W-B	Always	10 - 14 V
IG ↔ E (T5-13 ↔ T6-7)	L ↔ W-B	Ignition switch is turned to ”ON” position	10 - 14 V

LSWD ↔ E (T5-14 ↔ T6-7)	L-B ↔ W-B	Door unlock detection switch "ON" (Driver's door)	Below 1 Ω
		Door unlock detection switch "OFF" (Driver's door)	1 MΩ or higher
LSWP ↔ E (T5-15 ↔ T6-7)	L-B ↔ W-B	Door unlock detection switch "ON" (Passenger's door)	Below 1 Ω
		Door unlock detection switch "OFF" (Passenger's door)	1 MΩ or higher
LSWR ↔ E (T5-16 ↔ T6-7)	GR ↔ W-B	Door unlock detection switch "ON" (Rear door)	Below 1 Ω
		Door unlock detection switch "OFF" (Rear door)	1 MΩ or higher
+B2 ↔ Body ground (T6-1 ↔ Body ground)	W-L ↔ Body ground	Always	10 - 14 V
SH- ↔ E (T6-2 ↔ T6-7)	B ↔ W-B	Alarming condition	10 - 14 V
SRLY ↔ E (T6-5 ↔ T6-7)	P ↔ W-B	Ignition switch is turned to "ST" (When park/neutral position switch "P" position)	Below 1 Ω
IND ↔ E (T6-6 ↔ T6-7)	V-R ↔ W-B	During set preparation	3 - 5 V
E ↔ Body ground (T6-7 ↔ Body ground)	W-B ↔ Body ground	Always	Below 1 Ω
SH ↔ E (T6-9 ↔ T6-7)	G-W ↔ W-B	Always	10 - 14 V
HEAD ↔ E (T6-10 ↔ T6-7)	R ↔ W-B	Alarming condition (Headlight light up)	0 - 2 V
TAIL ↔ E (T6-11 ↔ T6-7)	G-B ↔ W-B	Alarming condition (Taillight light up)	0 - 2 V
HORN ↔ E (T6-12 ↔ T6-7)	W-R ↔ W-B	Alarming condition (Horn sound)	0 - 2 V

DI6WE-02

Theft Deterrent Horn Circuit

CIRCUIT DESCRIPTION

When the theft deterrent system is activated, the relay in the ECU turns ON and OFF cycles of approximately 0.2 sec., causing the theft deterrent horn to blow (See the wiring diagram below).
In this condition, if any of the following operations is done, the relay in the ECU turns OFF, thus stopping the theft deterrent horn from blowing:

(1) Unlock the front LH or RH door with a key.
(2) Turn the ignition switch to IG or ON position.
(3) Unlock the doors with the wireless door lock control system.
(4) Wait for approximately 60 seconds.

WIRING DIAGRAM

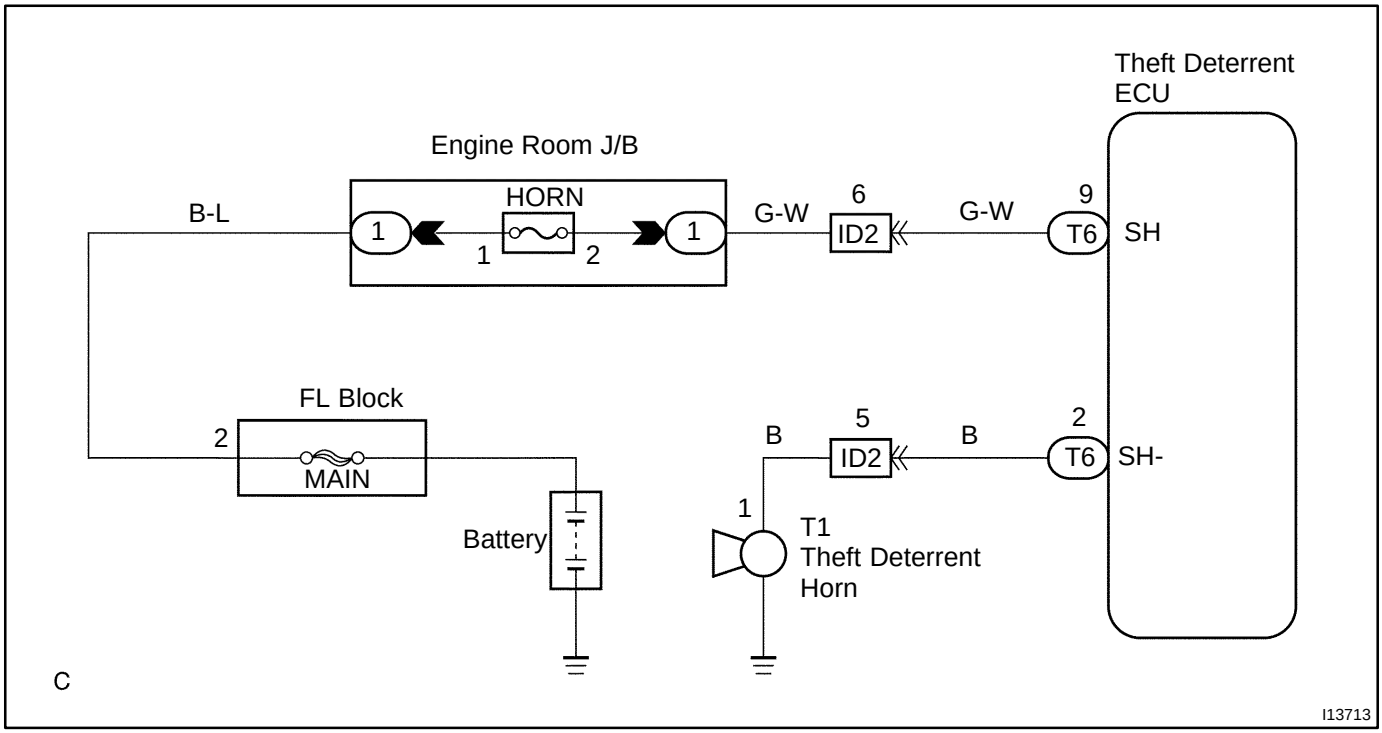

INSPECTION PROCEDURE

1	**Check voltage between terminal 1 of theft deterrent horn connector and body ground.**

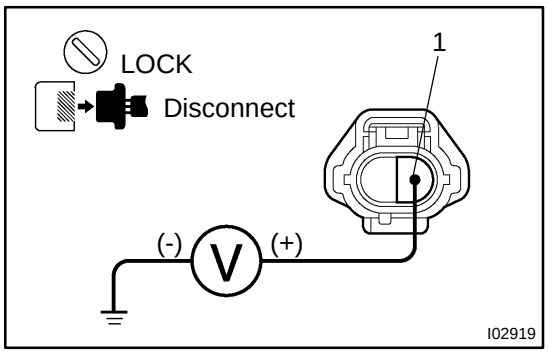

PREPARATION:
Remove the theft deterrent horn and disconnect the connector.
CHECK:
Measure voltage between terminal 1 of theft deterrent horn connector and body ground.
OK:
Voltage: 10 - 14 V

NG → **Check and repair harness and connector between HORN fuse and theft deterrent horn.**

OK

2	**Check theft deterrent horn.**

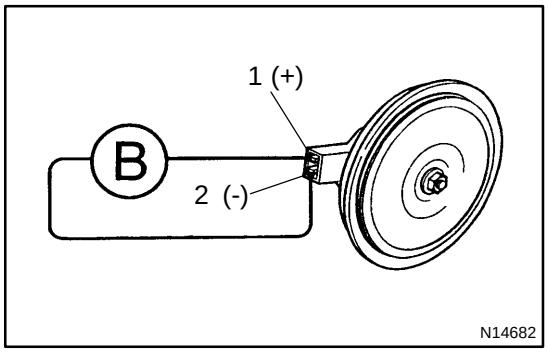

CHECK:
Connect positive (+) lead from the battery to terminal 1 and negative (-) lead to terminal 2 of theft deterrent horn connector.
OK:
Theft deterrent horn blows.

NG → **Replace theft deterrent horn.**

OK

3	**Check harness and connector between theft deterrent ECU and theft deterrent horn (See page IN-29).**

NG → **Check and repair harness or connector.**

OK

Check and replace theft deterrent ECU.

EMISSION CONTROL SYSTEM

EC02E-01

PURPOSE

The emission control systems are installed to reduce the amount of CO, HC and NOx exhausted from the engine ((3) and (4)), to prevent the atmospheric release of blow-by gas-containing HC (1) and evaporated fuel containing HC being released from the fuel tank (2).
The function of each system is shown in these table.

System	Abbreviation	Function
(1) Positive Crankcase Ventilation	PCV	Reduces HC
(2) Evaporative Emission Control	EVAP	Reduces evaporated HC
(3) Three-way Catalytic Converter	TWC	Reduces HC, CO and NOx
(4) Sequential Multiport Fuel Injection*	SFI	Injects a precisely timed, optimum amount of fuel for reduced exhaust emissions

Remark: *For inspection and repair of the SFI system, refer to the SF section of this manual.

EC0E6-01

INSPECTION

1. INSPECT LINES AND CONNECTORS

Visually check for loose connections, sharp bends or damage.

2. INSPECT FUEL TANK FILLER PIPE

Visually check for deformation, cracks or fuel leakage.

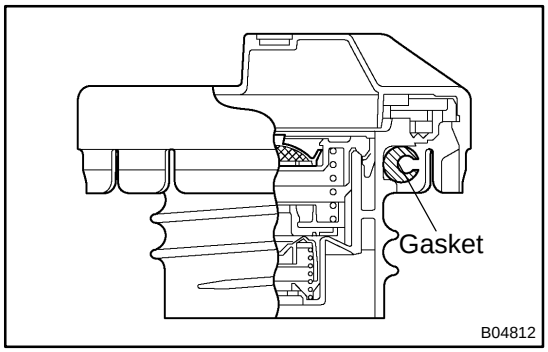

3. INSPECT FUEL TANK CAP

Visually check if the cap and/or gasket are deformed or damaged.

If necessary, repair or replace the cap.

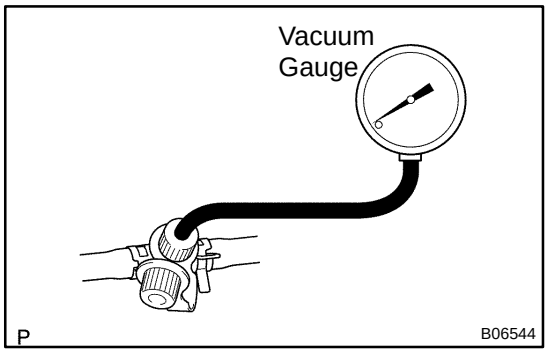

4. INSPECT EVAP SYSTEM LINE

(a) Warm up the engine and stop the engine.
Allow the engine to warm up to normal operating temperature.

(b) Install a vacuum gauge (EVAP control system test equipment vacuum gauge) to the EVAP service port on the purge line.

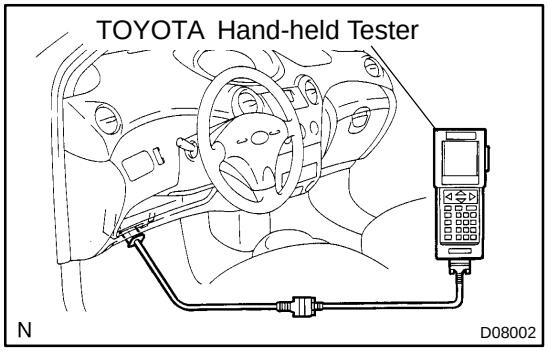

(c) TOYOTA hand-held tester:
Forced driving of the VSV for the EVAP.
(1) Connect a TOYOTA hand-held tester to the DLC3.
(2) Start the engine.
(3) Push the TOYOTA hand-held tester main switch ON.
(4) Use the ACTIVE TEST mode on the TOYOTA hand-held tester to operate the VSV for the EVAP.

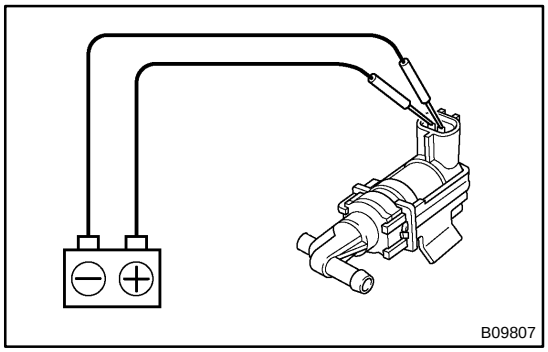

(d) If you have no TOYOTA hand-held tester:
Forced driving of the VSV for the EVAP.
(1) Disconnect the VSV connector for the EVAP.
(2) Connect the positive (+) and negative (-) leads from the battery to the VSV terminals for the EVAP.
(3) Start the engine.

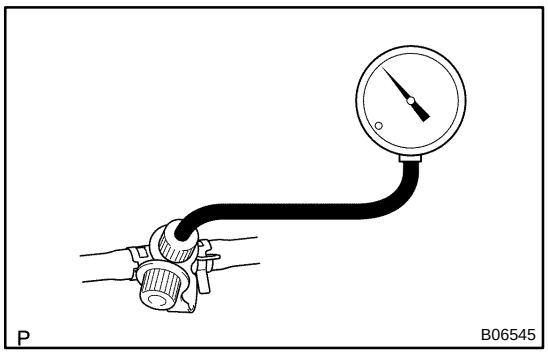

(e) Check the vacuum at idle.
Vacuum:
Maintain at 0.368 - 19.713 in.Hg (5 - 268 in.Aq) for over 5 seconds

HINT:
If the vacuum does not change, you can conclude that the hose connecting the VSV to the service port has come loose or is blocked, or the VSV is malfunctioning.

(f) If you have TOYOTA hand-held tester:
Conclude forced driving of the VSV for the EVAP.
(1) Stop the engine.
(2) Disconnect the TOYOTA hand-held tester from the DLC3.

(g) If you have no TOYOTA hand-held tester:
Conclude forced driving of the VSV for the EVAP.
(1) Stop the engine.
(2) Disconnect the positive (+) and negative (-) leads from the battery, and from the VSV terminals for the EVAP.
(3) Connect the VSV connector for the EVAP.

(h) Disconnect the vacuum gauge from the EVAP service port on the purge line.

(i) Connect a pressure gauge to the EVAP service port on the purge line.

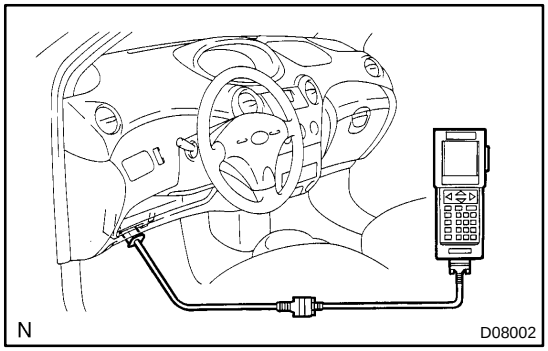

(j) If you have TOYOTA hand-held tester:
Force driving of the VSV for canister closed valve (CCV)
(1) Connect a TOYOTA hand-held tester to the DLC3.
(2) Turn the ignition switch ON.
(3) Push the TOYOTA hand-held tester main switch ON.
(4) Use the ACTIVE TEST mode on the TOYOTA hand-held tester to operate the VSV for canister closed valve (CCV).

NOTICE:
Do not start the engine.

HINT:
If the check is not completed within 10 minutes, the forced close of VSV for canister closed valve (CCV) will be reset.

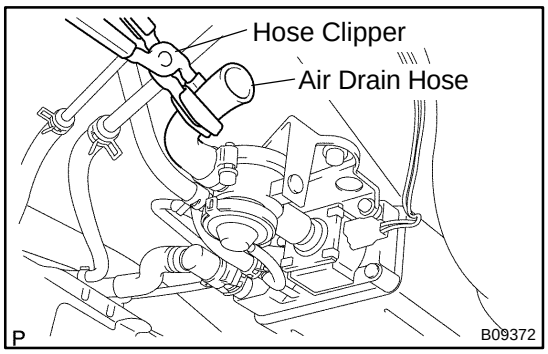

(k) IF you have no TOYOTA hand-held tester:
Close off the air drain hose at the marked position of the canister with a hose clipper or similar instrument.

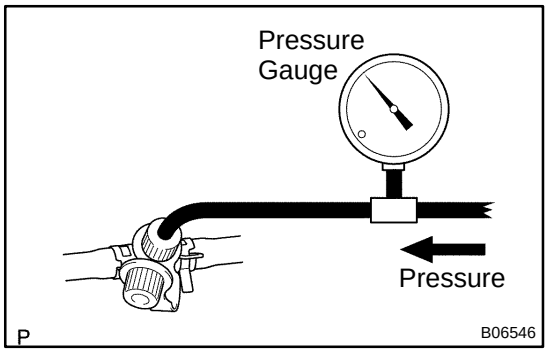

(l) Check the pressure.
(1) Add the pressure (13.5 - 15.5 in.Aq) from the EVAP service port.
Pressure:
2 minutes after the pressure is added, the gauge should be over 7.7 - 8.8 in.Aq.

HINT:
If you can't add pressure, you can conclude that the hose connecting the VSV for EVAP-canister-fuel tank has slipped off or the VSV is open.

(2) Check if the pressure decreases when the fuel tank cap is removed while adding pressure.

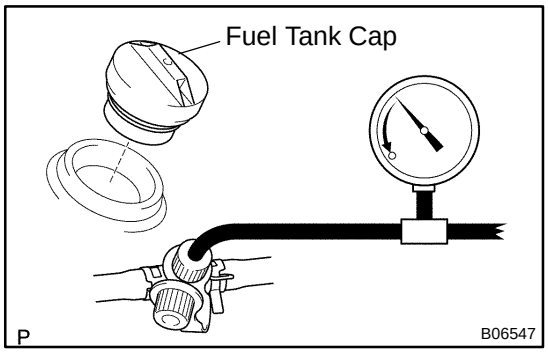

HINT:
If the pressure does not decrease when the filler cap is removed, then you can conclude that the hose connecting the service port to the fuel tank is blocked, etc.

(m) If you have TOYOTA hand-held tester:
Conclude forced driving of he VSV for canister closed valve (CCV).
(1) Turn ignition switch OFF.
(2) Disconnect the TOYOTA hand-held tester from the DLC3.

(n) If you have no TOYOTA hand-held tester:
Remove the hose clipper or similar instrument from the air drain hose.

(o) Disconnect the pressure gauge from the EVAP service port on the purge line.

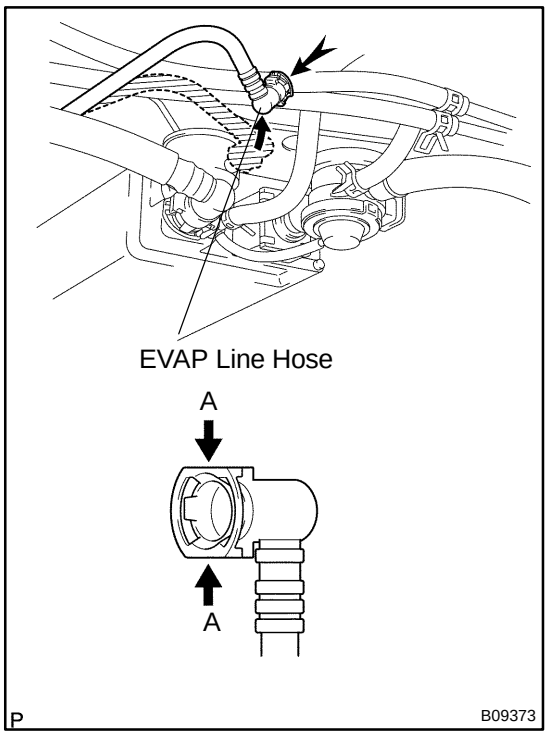

5. CHECK AIRTIGHTNESS IN FUEL TANK AND FILLER PIPE

(a) Disconnect the EVAP line hose from the charcoal canister.
  (1) Pinch portion A.
  (2) Pull out the connector.
(b) Pressurize and make the internal pressure in the fuel tank 4 kPa (41 gf/cm^2, 0.58 psi).
(c) Check that the internal pressure of the fuel tank can be held for 1 minute.
(d) Check the connected portions of each hose and pipe.
(e) Check the installed parts on the fuel tank.

If there is no abnormality, replace the fuel tank and filler pipe.

(f) Reconnect the EVAP line hose to the charcoal canister.

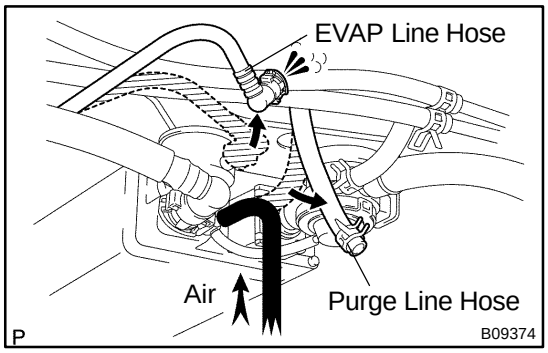

6. INSPECT FUEL CUTOFF VALVE AND FILL CHECK VALVE

(a) Disconnect the purge line hose and EVAP line hose from the charcoal canister.
(b) Plug the cap to the air drain hose.
(c) Pressurize 4 kPa (41 gf/cm^2, 0.58 psi) to the purge port and check that there is ventilation through the EVAP line hose.

HINT:

In the condition that the fuel is full, as the float value of the fill check valve is closed and has no ventilation, it is necessary to check the fuel amount (volume).

(d) Check if there is anything stuck in the vent line hose and EVAP line hose.

If there is nothing stuck in them, replace the fuel cut off valve and fill check valve.

(e) Reconnect the purge line hose and EVAP line hose to the charcoal canister.

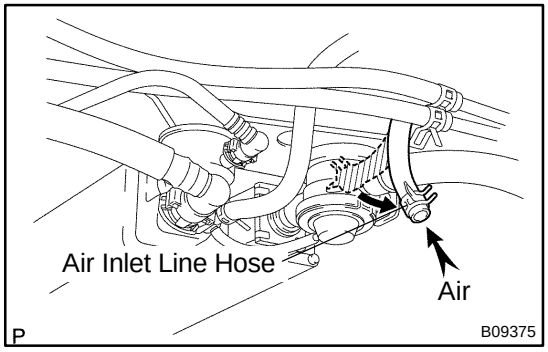

7. CHECK AIR INLET LINE

(a) Disconnect the air inlet line hose from the charcoal canister.
(b) Check that there is ventilation in the air inlet line.
(c) Reconnect the air inlet line hose to the charcoal canister.

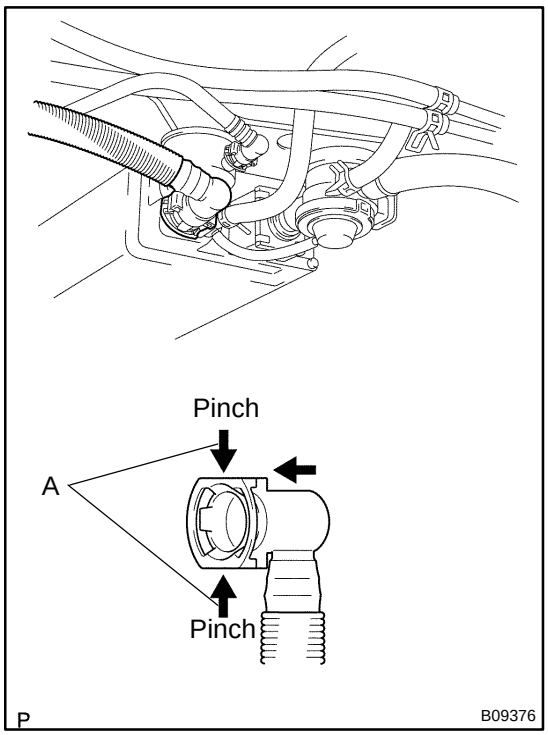

8. REMOVE CHARCOAL CANISTER ASSEMBLY

(a) Disconnect the VSV connector.

(b) Disconnect the purge line hose, EVAP line hose and air inlet line hose from the charcoal canister.

(c) Disconnect the vent line hose from charcoal canister.
- (1) Push the connector deep inside.
- (2) Pinch portion A.
- (3) Pull out the connector.

(d) Remove the 3 nuts and charcoal canister assembly.

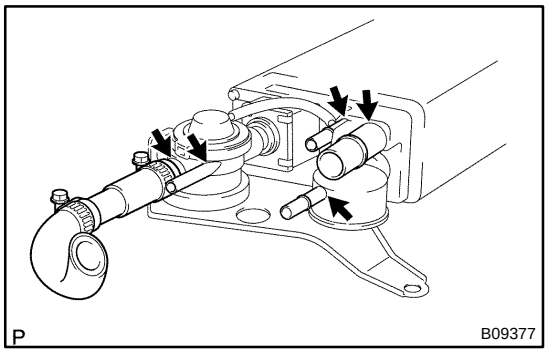

9. INSPECT CHARCOAL CANISTER

(a) Visually check the charcoal canister for cracks or damage.

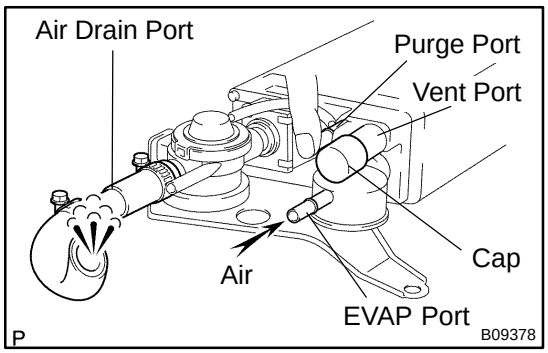

(b) Inspect the charcoal canister operation.
- (1) Plug the vent port with a cap.
- (2) While holding the purge port closed, blow air (1.76 kPa, 18 gf/cm^2, 0.26 psi) into the EVAP port and check that air flows from the air drain port.

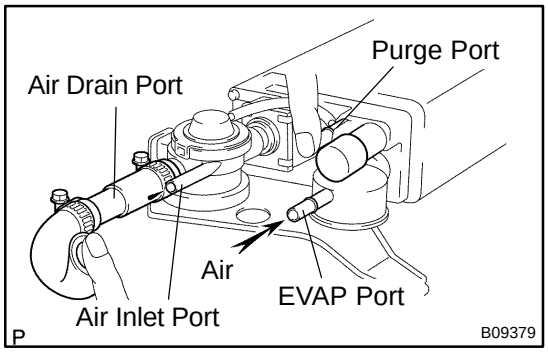

- (3) While holding the purge port and the air drain port closed, blow air (1.76 kPa, 18 gf/cm^2, 0.26 psi) into the EVAP port and check that air does not flow from the air inlet port.

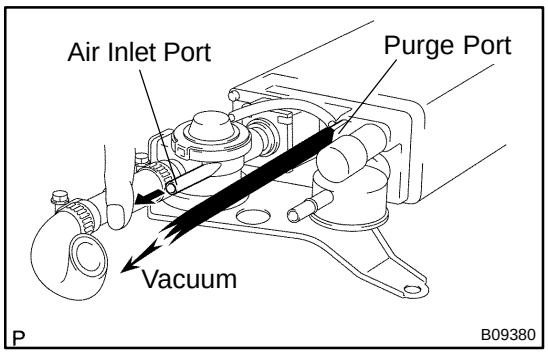

(4) Apply vacuum (3.43 kPa, 25.7 mmHg, 1.01 in.Hg) to the purge port, check that the vacuum does not decrease when the air inlet port is closed, and check that the vacuum decreases when the air inlet port is released.

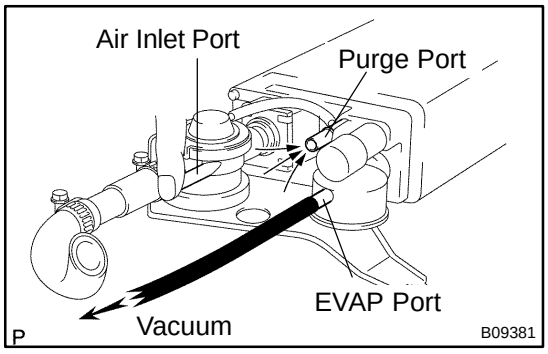

(5) While holding the air inlet port closed, apply vacuum (3.43 kPa, 25.7 mmHg, 1.01 in.Hg) to the EVAP port and check that air flows into the purge port.

If a problem is found, replace the charcoal canister.

(6) Remove the cap from the vent port.

10. INSPECT VSV FOR EVAP
(See page SF-50)

11. INSPECT VSV FOR CANISTER CLOSED VALVE (CCV)
(See page SF-52)

12. INSPECT VAPOR PRESSURE SENSOR
(See page SF-56)

13. REINSTALL CHARCOAL CANISTER ASSEMBLY

POSITIVE CRANKCASE VENTILATION (PCV) SYSTEM

EC0E5-01

INSPECTION

1. REMOVE PCV VALVE

(a) Remove the No. 2 cylinder head cover.

(b) Disconnect the PCV hose from the PCV valve.

(c) Remove the PCV valve.

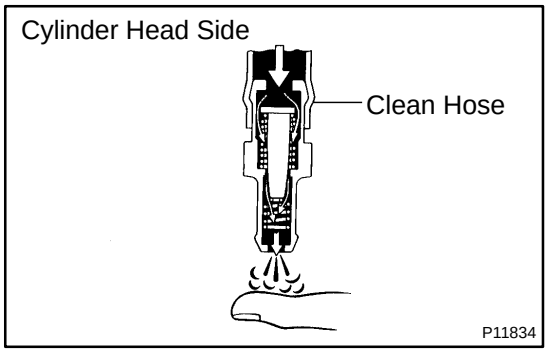

2. INSTALL CLEAN HOSE TO PCV VALVE

3. INSPECT PCV VALVE OPERATION

(a) Blow air into the cylinder head side, and check that air passes through easily.

CAUTION:

Do not suck air through the valve. Petroleum substances inside the valve are harmful.

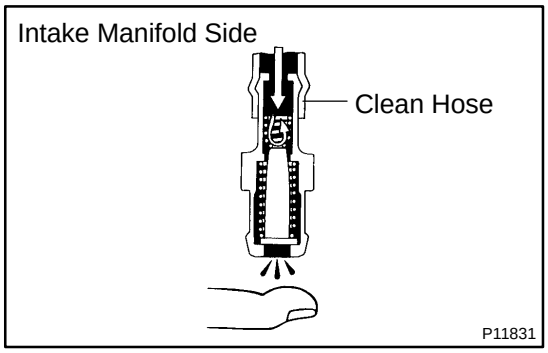

(b) Blow air into the intake manifold side, and check that air passes through with difficulty.

If operation is not as specified, replace the PCV valve.

4. REMOVE CLEAN HOSE FROM PCV VALVE

5. REINSTALL PCV VALVE

(a) Install the PCV valve to the cylinder head cover.

Torque: 27 N·m (275 kgf·cm, 20 ft·lbf)

(b) Connect the PCV hose to the PCV valve.

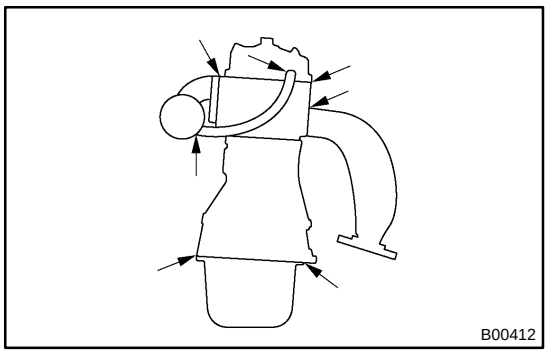

6. VISUALLY INSPECT HOSES, CONNECTIONS AND GASKETS

Check for cracks, leaks or damage.

EC02G-07

DRAWING

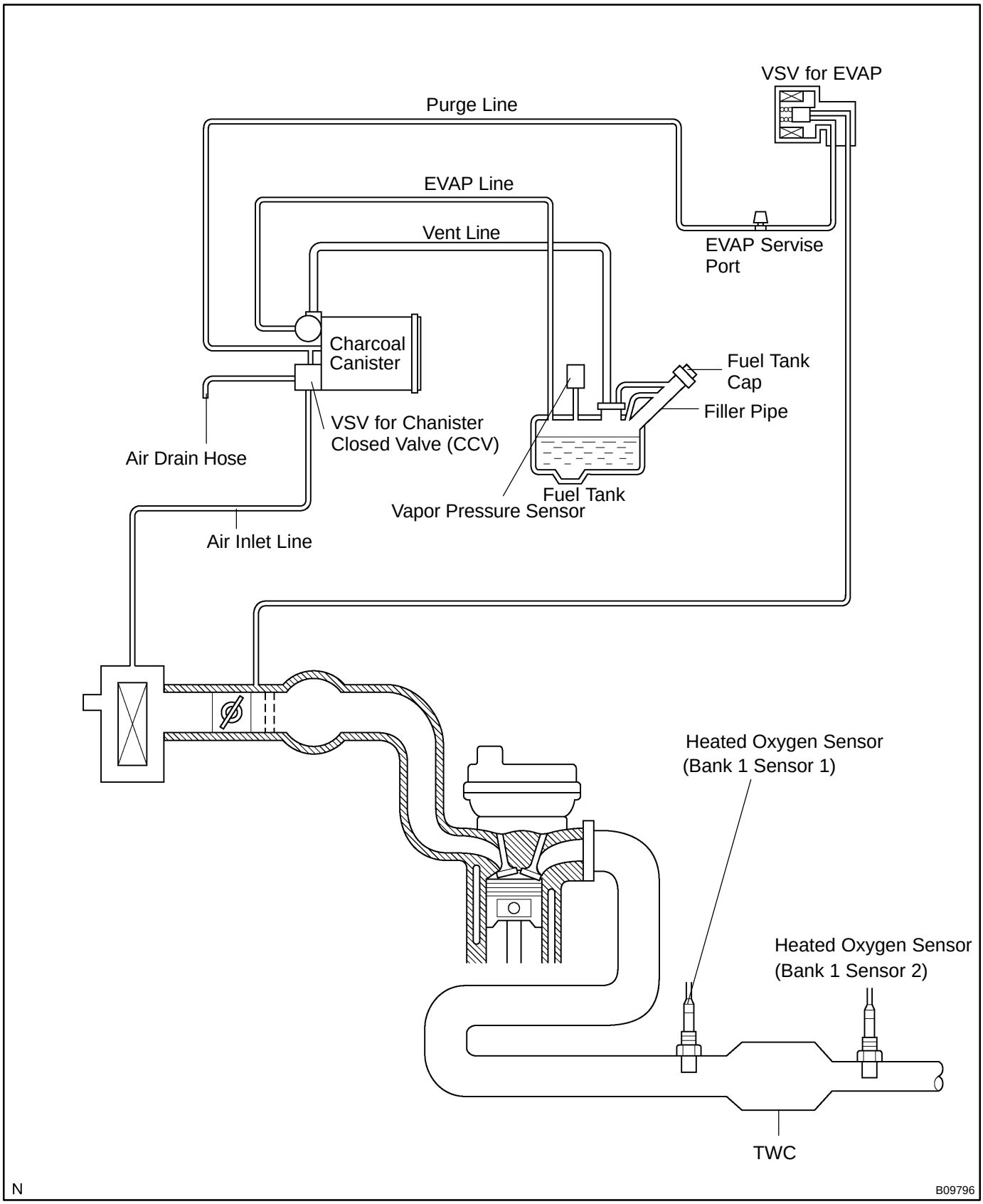

PARTS LAYOUT AND SCHEMATIC DRAWING

LOCATION

EC02F-08

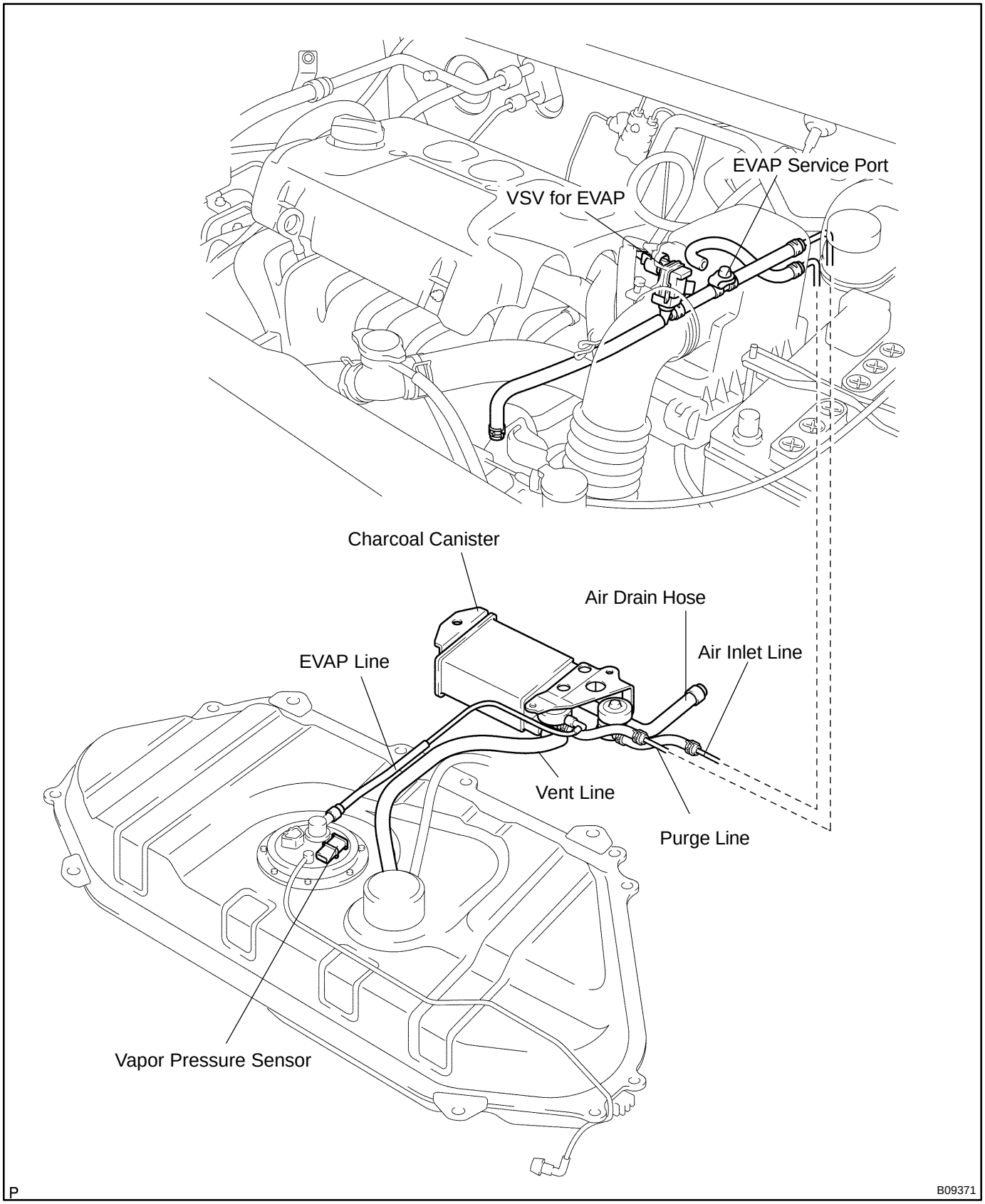

THREE-W AY CATALYTIC CONVERTER (TWC) SYSTEM

EC02K-05

INSPECTION

1. CHECK TWC FOR DENTS OR DAMAGE

If any port of the heat insulatr is damaged or dented to the extent that it contacts the three-way catalytic converter, repair or replace it.

2. CHECK EXHAUST PIPE CONNECTIONS FOR LOOSENESS OR DAMAGE

3. CHECK EXHAUST PIPE CLAMPS FOR WEAKNESS, CRACKS OR DAMAGE

4. CHECK HEAT INSULATOR FOR DAMAGE

5. CHECK FOR ADEQUATE CLEARANCE BETWEEN EXHAUST SYSTEM AND HEAT INSULATOR ON THE BODY

CO/HC

EM167-01

INSPECTION

HINT:

This check is used only to determine whether or not the idle CO/HC complies with regulations.

1. INSTALL CONDITIONS

(a) Engine at normal operating temperature
(b) Air cleaner installed
(c) Air pipes and hoses of air induction system connected
(d) All accessories switched OFF
(e) All vacuum lines properly connected
(f) SFI system wiring connectors fully plugged
(g) Ignition timing check correctly
(h) Transmission in neutral position
(i) Tachometer and CO/HC meter calibrated by hand

2. START ENGINE

3. RACE ENGINE AT 2,500 RPM FOR APPROX. 180 SECONDS

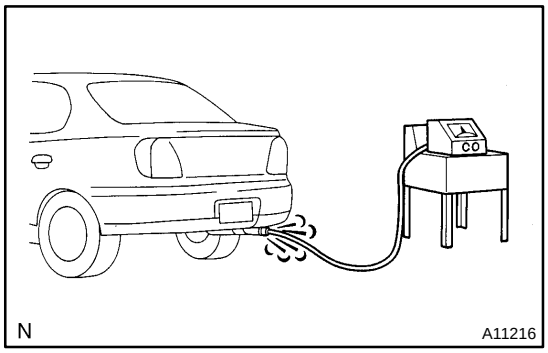

4. INSERT CO/HC METER TESTING PROBE AT LEAST 40 cm (1.3 ft) INTO TAILPIPE DURING IDLING

5. IMMEDIATELY CHECK CO/HC CONCENTRATION AT IDLE AND/OR 2,500 RPM

Complete the measuring with 3 minutes.

HINT:

When doing the 2 mode (idle and 2,500 rpm) test, these measurement order prescribed by the applicable local regulations.

If the CO/HC concentration does not comply with regulations, troubleshoot in the order given below.

- Check heated oxygen sensor operation.
  (See page DI-48)
- See the table below for possible causes, and then inspect and correct the applicable causes if necessary.

CO	HC	Problems	Causes
Normal	High	Rough idle	1. Faulty ignitions: • Incorrect timing • Fouled, shorted or improperly gapped plugs • Open or crossed high-tension cords 2. Incorrect valve clearance 3. Leaky intake and exhaust valves 4. Leaky cylinders
Low	High	Rough idle (Fluctuating HC reading)	1. Vacuum leaks: • PCV hoses • Intake manifold • Throttle body • IAC valve • Brake booster line 2. Lean mixture causing misfire
High	High	Rough idle (Black smoke from exhaust)	1. Restricted air filter 2. Plugged PCV valve 3. Faulty SFI systems: • Faulty pressure regulator • Defective ECT sensor • Defective IAT sensor • Faulty ECM • Faulty injectors • Faulty throttle position sensor

COMPRESSION

EM168-01

INSPECTION

HINT:

If there is lack of power, excessive oil consumption or poor fuel economy, measure the compression pressure.

1. WARM UP AND STOP ENGINE

Allow the engine to warm up to normal operating temperature.

2. REMOVE NO. 2 CYLINDER HEAD COVER

3. REMOVE IGNITION COIL (See page IG-6)

4. REMOVE SPARK PLUGS

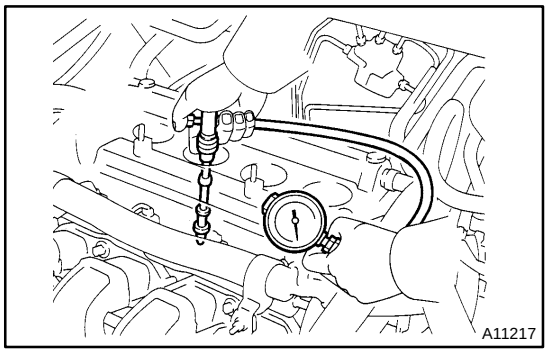

5. INSPECT CYLINDER COMPRESSION PRESSURE

(a) Insert a compression gauge into the spark plug hole.

(b) Fully open the throttle.

(c) While cranking the engine, measure the compression pressure.

HINT:

Always use a fully charged battery to obtain engine speed of 250 rpm or more.

(d) Repeat steps (a) through (c) for each cylinder.

NOTICE:

This measurement must be done in as short a time as possible.

Compression pressure:
1,471 kPa (15.0 kgf/cm^2, 213 psi)
Minimum pressure:
1,079 kPa (11.0 kgf/cm^2, 156 psi)
Difference between each cylinder:
98 kPa (1.0 kgf/cm^2, 14 psi) or less

(e) If the cylinder compression in one more cylinders is low, pour a small amount of engine oil into the cylinder through the spark plug hole and repeat steps (a) through (c) for cylinders with low compression.

- If adding oil helps the compression, it is likely that the piston rings and/or cylinder bore are worn or damaged.
- If pressure stays low, a valve may be sticking or seating is improper, or there may be leakage past the gasket.

6. REINSTALL SPARK PLUGS
7. REINSTALL IGNITION COIL (See page IG-7)
8. REINSTALL NO. 2 CYLINDER HEAD COVER

CYLINDER BLOCK

COMPONENTS

EM17B-01

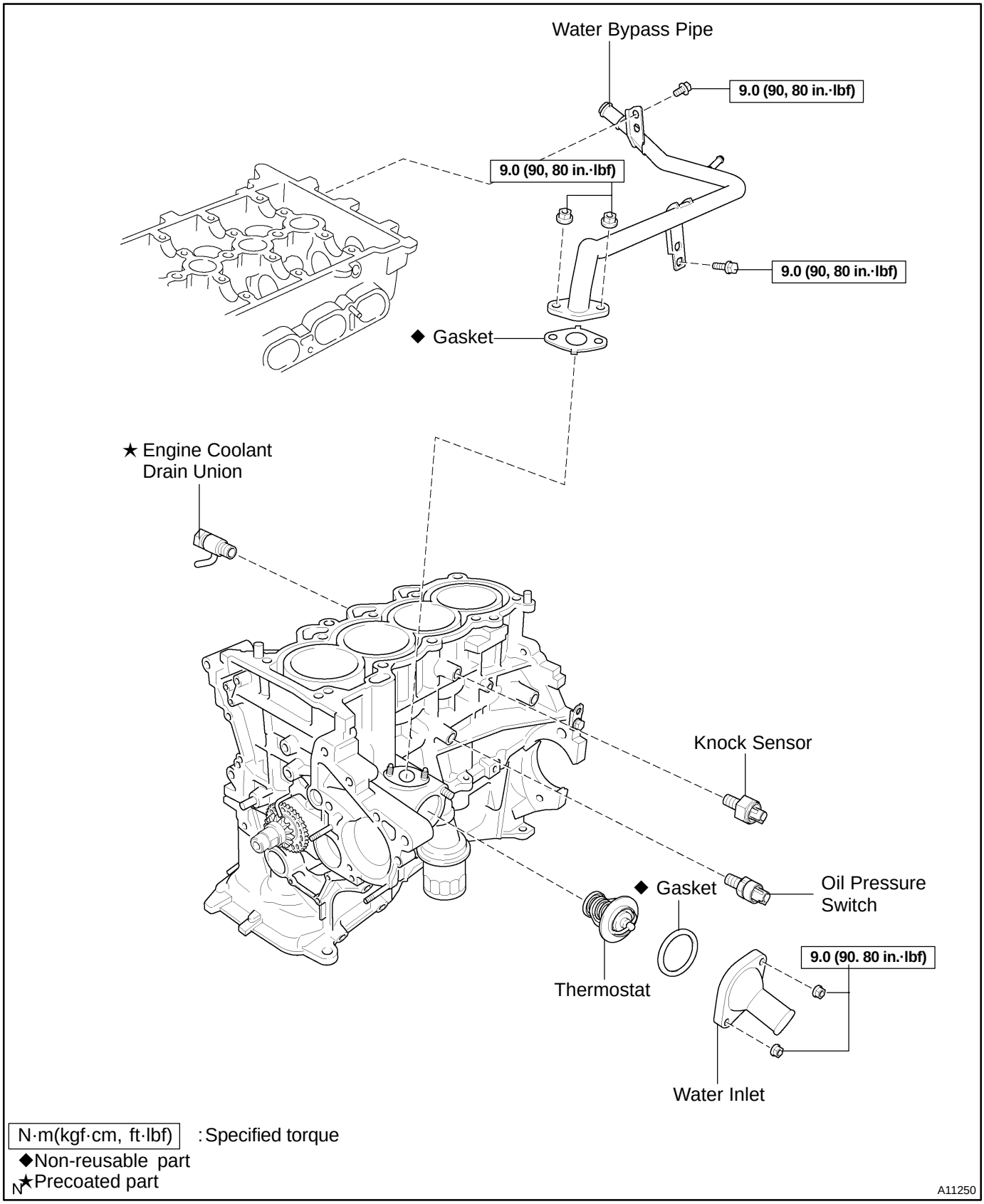

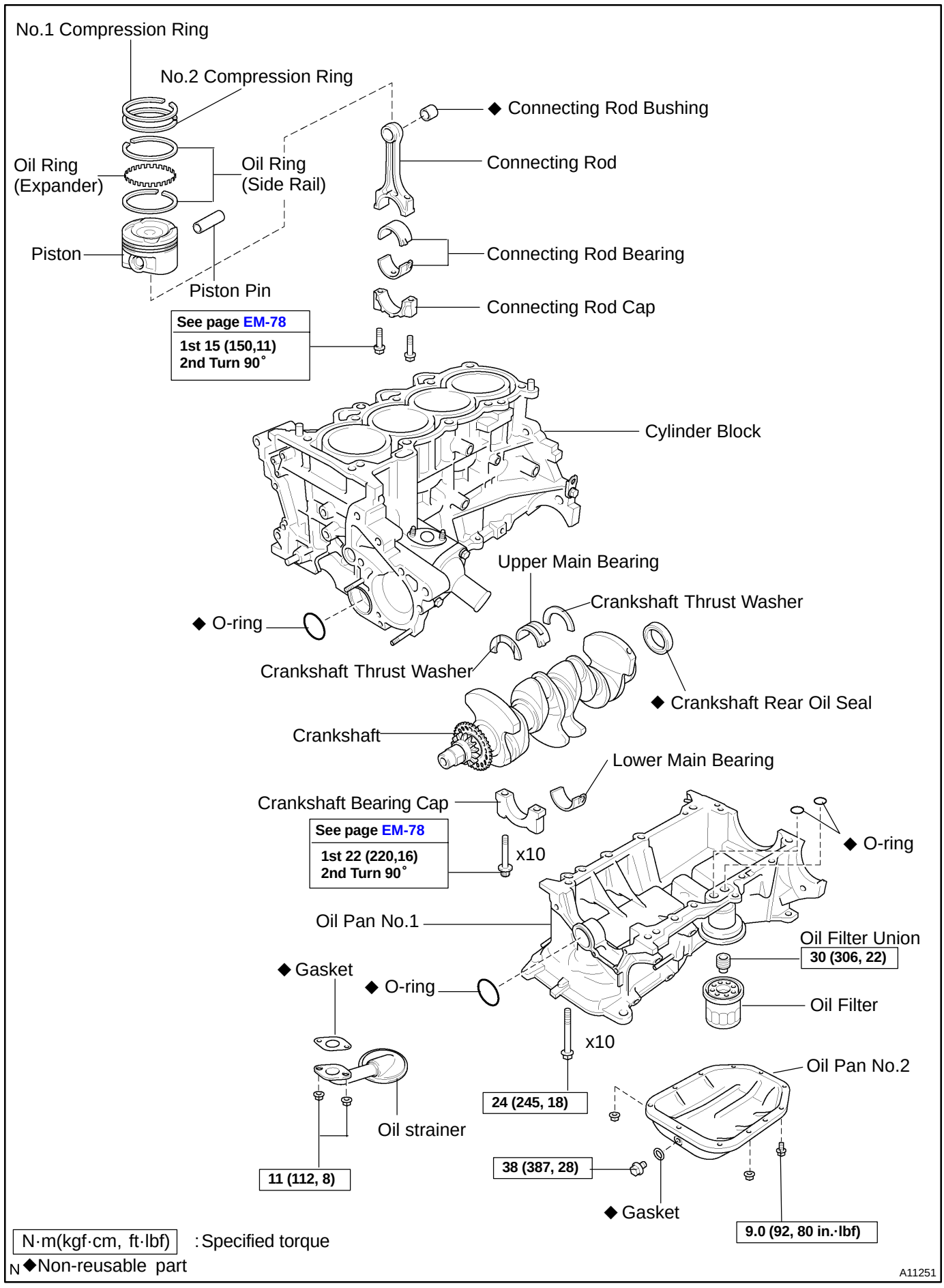
No.1 Compression Ring
No.2 Compression Ring
◆ Connecting Rod Bushing
Oil Ring (Expander)
Oil Ring (Side Rail)
Connecting Rod
Piston
Connecting Rod Bearing
Piston Pin
Connecting Rod Cap
See page EM-78
1st 15 (150,11)
2nd Turn 90°
Cylinder Block
Upper Main Bearing
Crankshaft Thrust Washer
◆ O-ring
Crankshaft Thrust Washer
◆ Crankshaft Rear Oil Seal
Crankshaft
Lower Main Bearing
Crankshaft Bearing Cap
See page EM-78
1st 22 (220,16)
2nd Turn 90°
x10
◆ O-ring
Oil Pan No.1
Oil Filter Union
30 (306, 22)
◆ Gasket
◆ O-ring
Oil Filter
x10
Oil Pan No.2
24 (245, 18)
Oil strainer
38 (387, 28)
11 (112, 8)
◆ Gasket
9.0 (92, 80 in.·lbf)
N·m(kgf·cm, ft·lbf) : Specified torque
N ◆Non-reusable part
A11251

EM17C-01

DISASSEMBLY

1. **M/T:**
   REMOVE FLYWHEEL
2. **A/T:**
   REMOVE DRIVE PLATE
3. **INSTALL ENGINE TO ENGINE STAND FOR DISASSEMBLY**
4. **REMOVE TIMING CHAIN (See page EM-15)**
5. **REMOVE CYLINDER HEAD**
   (See page EM-28)
6. **REMOVE ENGINE WIRE**

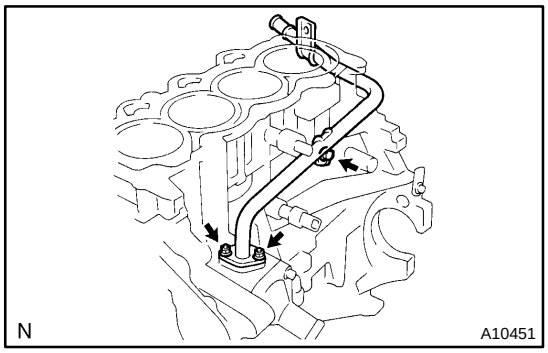

7. **REMOVE WATER BYPASS PIPE**

Remove the 2 nuts, bolt and water bypass pipe.

8. **REMOVE THERMOSTAT**
   (See page CO-8)
9. **REMOVE KNOCK SENSOR (See page SF-57)**
10. **REMOVE OIL PRESSURE SWITCH**
    (See page LU-1)
11. **REMOVE ENGINE COOLANT DRAIN UNION**
12. **REMOVE OIL FILTER**
    (See page LU-2)
13. **REMOVE OIL FILTER UNION**

Using a 12 mm hexagon wrench, remove the oil filter union.

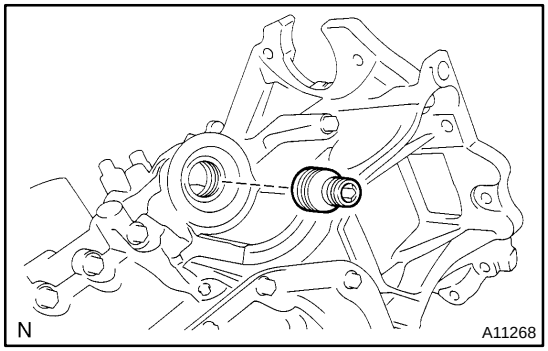

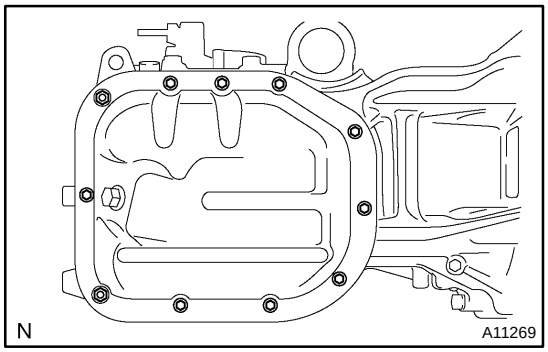

14. **REMOVE OIL PAN NO. 2**

(a) Remove the 9 bolts and 2 nuts.

(b) Insert the blade of SST between the oil pan No. 1 and oil pan No. 2, and cut off applied sealer and remove the oil pan.

SST 09032-00100

NOTICE:

- **Be careful not to the damage the oil pan contact surface of the oil pan No. 1.**
- **Be careful not to damage the oil pan No. 2 flange.**

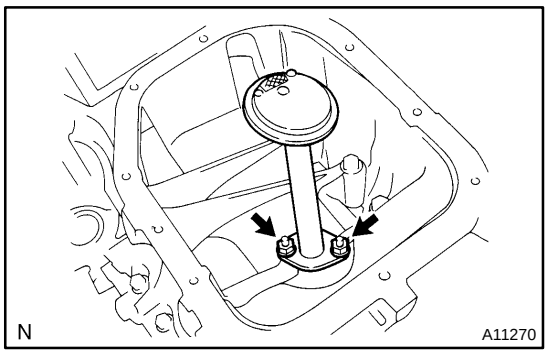

15. REMOVE OIL STRAINER

Remove the 2 nuts, oil strainer and gasket.

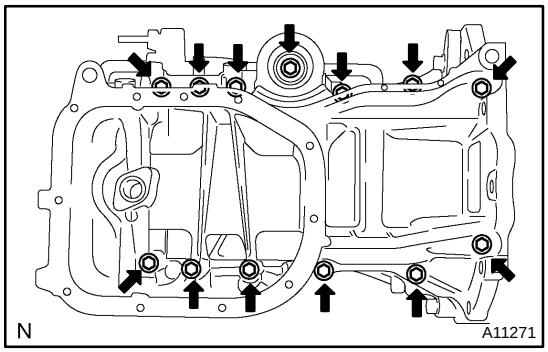

16. REMOVE OIL PAN NO. 1

(a) Uniformly loosen and remove the 13 bolts, in several passes, in the sequence shown.

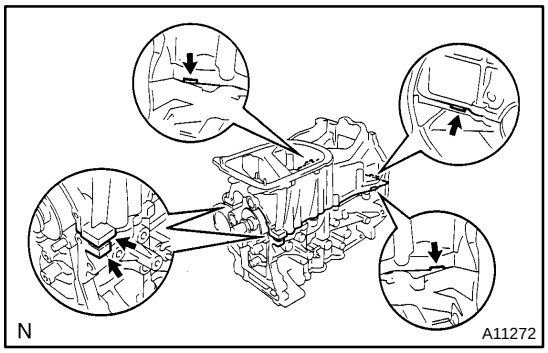

(b) Using screwdriver remove the oil pan No. 1 by prying the portions between the cylinder block and oil pan No. 1.

(c) Remove the 2 O-rings from cylinder block.

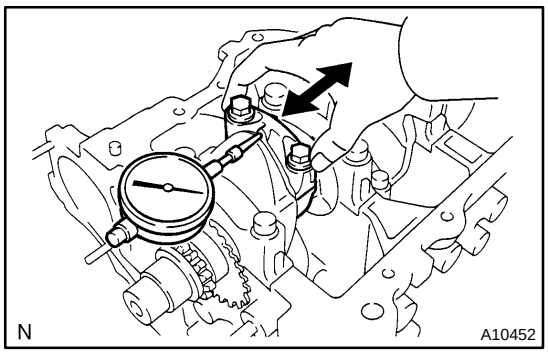

17. CHECK CONNECTING ROD THRUST CLEARANCE

Using a dial indicator, measure the thrust clearance while moving the connecting rod back and forth.

Standard thrust clearance:
0.16 - 0.36 mm (0.0063 - 0.0142 in.)
Maximum thrust clearance:
0.36 mm (0.0142 in.)

If the thrust clearance is greater than maximum, replace the connecting rod assembly(s). If necessary, replace the crankshaft.

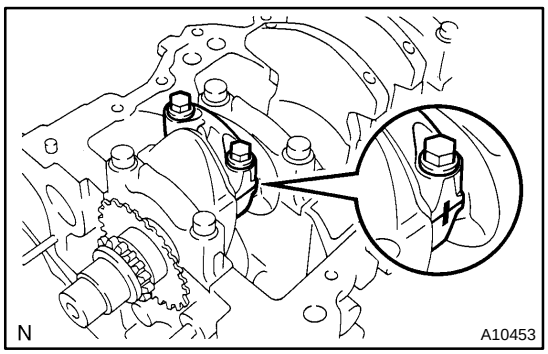

18. REMOVE CONNECTING ROD CAPS AND CHECK OIL CLEARANCE

(a) Check the matchmarks on the connecting rod and cap are aligned to ensure correct reassembly.

(b) Remove the 2 connecting rod cap bolts.

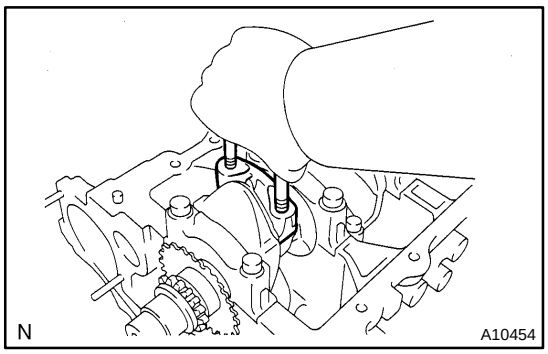

(c) Using the 2 removed connecting rod cap bolts, remove the connecting rod cap and lower bearing by wiggling the connecting rod cap right and left.

HINT:

Keep the lower bearing inserted with the connecting rod cap.

(d) Clean the crank pin and bearing.

(e) Check the crank pin and bearing for pitting and scratches.

If the crank pin or bearing is damaged, replace the bearings.

If necessary, replace the crankshaft.

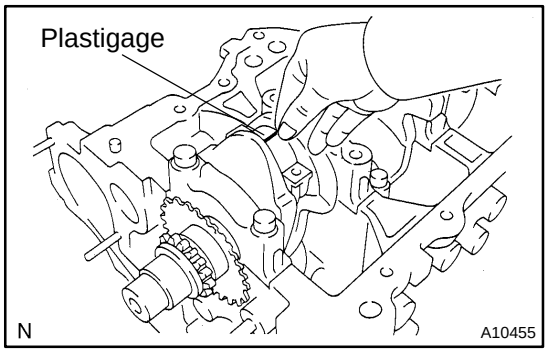

(f) Lay a strip of Plastigage the crank pin.

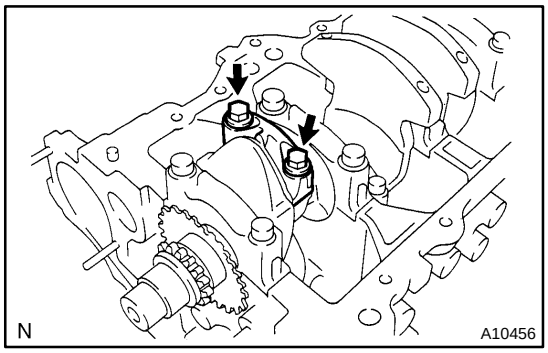

(g) Install the connecting rod cap with the 2 bolts.
(See page EM-78)
Torque:
1ST 15 N·m (150 kgf·cm, 11 ft·lbf)
2ND Turn 90 °

NOTICE:

Do not turn the crankshaft.

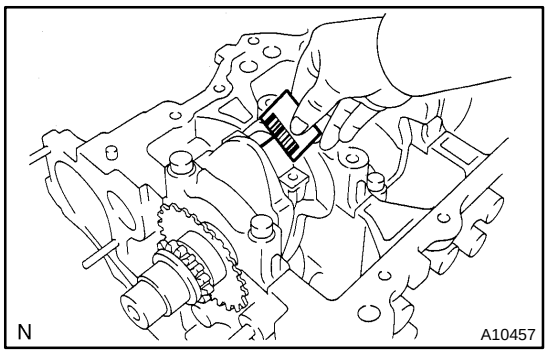

(h) Remove the 2 bolts, connecting rod cap and lower bearing. (See procedure (b) and (c) above)

(i) Measure the Plastigage at its widest point.
Standard oil clearance:
0.016 - 0.040 mm (0.0006 - 0.0016 in.)
Maximum oil clearance:
0.06 mm (0.0024 in.)

If the oil clearance is greater than maximum, replace the bearings. If necessary, grind or replace the crankshaft.

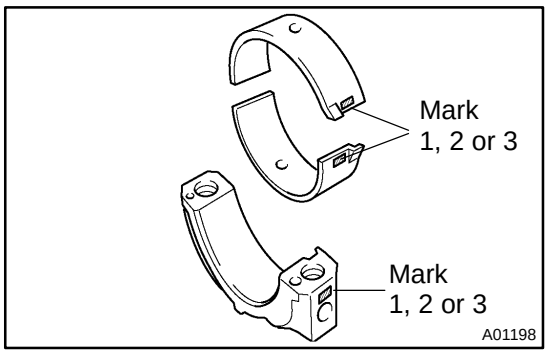

HINT:
If replacing a bearing, replace it with one having the same number as marked on the connecting rod. There are 3 sizes of standard bearings, marked ”1”, ”2” and ”3” accordingly.

Reference

Standard bearing center wall thickness

Mark	mm (in.)
”1”	1.488 - 1.492 (0.0586 - 0.0587)
”2”	1.492 - 1.496 (0.0587 - 0.0589)
”3”	1.496 - 1.500 (0.0589 - 0.0591)

(j) Completely remove the plastigage.

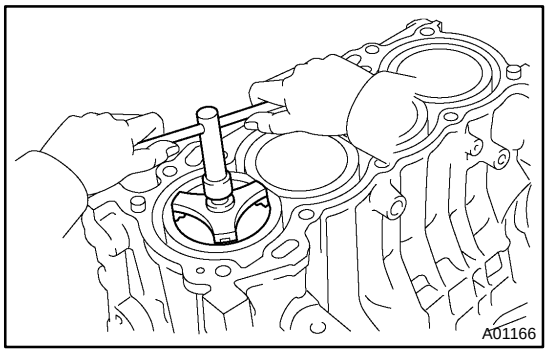

19. REMOVE PISTON AND CONNECTING ROD ASSEMBLIES

(a) Using a ridge reamer, remove all the carbon from the top of the cylinder.

(b) Push the piston, connecting rod assembly and upper bearing through the top of the cylinder block.

HINT:

- Keep the bearings, connecting rod and cap together.
- Arrange the piston and connecting rod assemblies in the correct order.

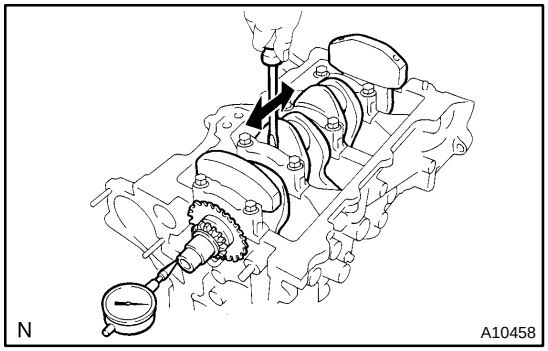

20. CHECK CRANKSHAFT THRUST CLEARANCE

Using a dial indicator, measure the thrust clearance while moving the crankshaft back and forth.

Standard thrust clearance:
0.09 - 0.19 mm (0.0035 - 0.0075 in.)
Maximum thrust clearance:
0.3 mm (0.012 in.)

If the thrust clearance is greater than maximum, replace the thrust washer as a set.

Thrust washer thickness:
2.430 - 2.480 mm (0.09567 - 0.09764 in.)

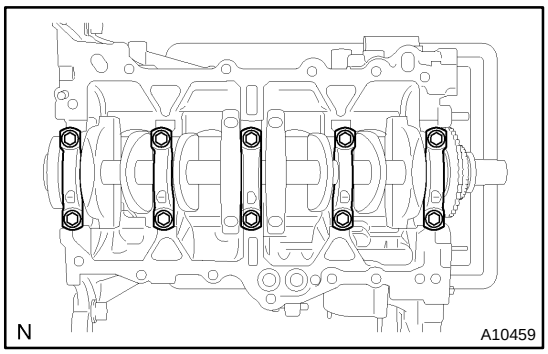

21. REMOVE BEARING CAPS AND CHECK OIL CLEARANCE

(a) Uniformly loosen and remove the 10 bearing cap bolts in several passes in the sequence shown.

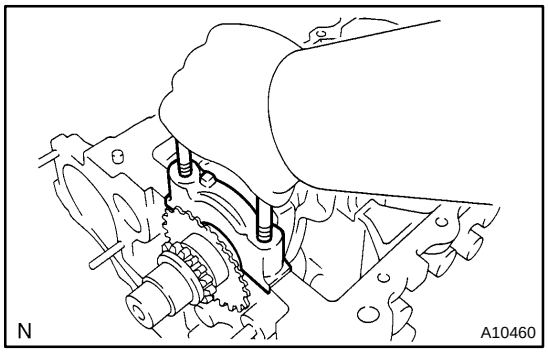

(b) Using the 2 removed bearing cap bolts, remove the bearing cap and lower bearing by wiggling the bearing cap right and left.

HINT:

Keep the lower bearing inserted with the bearing cap.

(c) Lift out the crankshaft.

HINT:

Keep the upper bearings and thrust washers together with the cylinder block.

(d) Clean each main journal and bearing.

(e) Check each main journal and bearing for pitting and scratches.

If the journal or bearing is damaged, replace the bearing.

If necessary, grind or replace the crankshaft.

(f) Place the crankshaft on the cylinder block.

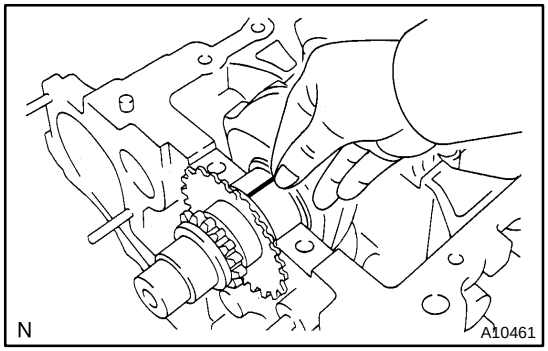

(g) Lay a strip of plastigage acrose each journal.

(h) Install the bearing caps (See page EM-44).

Torque:

1ST 22 N·m (220 kgf·cm, 16 ft·lbf)

2ND Turn 90 °

NOTICE:

Do not turn the crankshaft.

(i) Remove the bearing caps (See procedure (a) and (b) above).

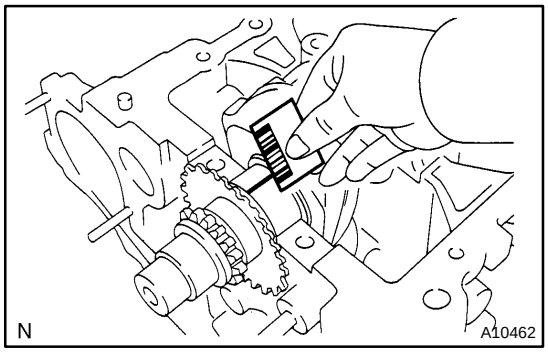

(j) Measure the plastigage at its widest point.

Standard oil clearance:

0.010 - 0.023 mm (0.0004 - 0.0009 in.)

Maximum oil clearance:

0.07 mm (0.0028 in.)

If the oil clearance is greater then maximum, replace the bearings. If necessary, replace the crankshaft.

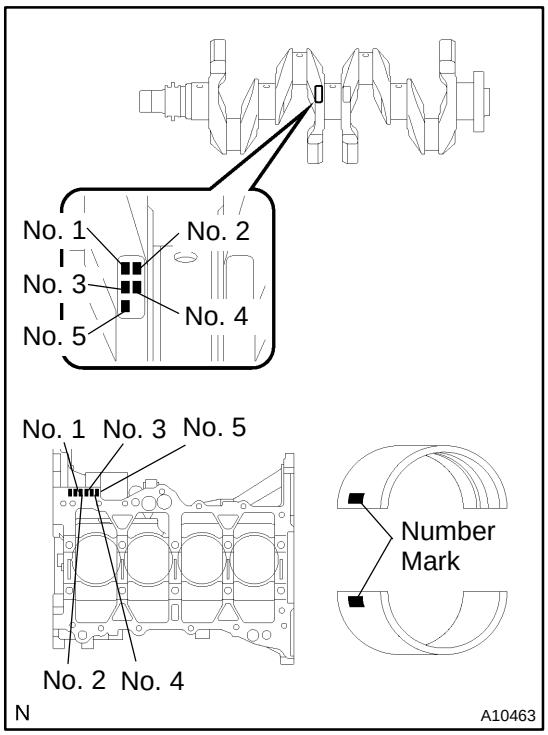

HINT:
If using a standard bearing, replace it with one having the same number. If the number of the bearing cannot be determined, select the correct bearing by adding together the numbers imprinted on the cylinder block and crankshaft, then selecting the bearing with the same number as the total. There are 4 sizes of standard bearings, marked "1", "2", "3" and "4" accordingly.

	Total number			" ": Number mark
Cylinder block (A) + Crankshaft (B)	0 - 2	3 - 5	6 - 8	9 -11
Use bearing	"1"	"2"	"3"	"4"

EXAMPLE: Cylinder block "4" (A)
+ Crankshaft "3" (B)
= Total number 7 (Use bearing "3")

Reference

Item	Mark	mm (in.)
Cylinder block main journal bore diameter (A)	"0"	50.000 - 50.003 (1.96850 - 1.96862)
	"1"	50.003 - 50.005 (1.96862 - 1.96870)
	"2"	50.005 - 50.007 (1.96870 - 1.96878)
	"3"	50.007 - 50.010 (1.96878 - 1.96889)
	"4"	50.010 - 50.012 (1.96889 - 1.96897)
	"5"	50.012 - 50.014 (1.96897 - 1.96905)
	"6"	50.014 - 50.016 (1.96905 - 1.96913)
Crankshaft main journal diameter (B)	"0"	46.000 - 46.002 (1.81102 - 1.81110)
	"1"	46.002 - 46.004 (1.81110 - 1.81118)
	"2"	46.004 - 46.006 (1.81118 - 1.81126)
	"3"	46.006 - 46.008 (1.81126 - 1.81133)
	"4"	46.008 - 46.010 (1.81133 - 1.81141)
	"5"	46.010 - 46.012 (1.81141 - 1.81149)
Standard bearing center wall thickness	"1"	1.992 - 1.995 (0.07843 - 0.07854)
	"2"	1.995 - 1.998 (0.07854 - 0.07866)
	"3"	1.998 - 2.001 (0.07866 - 0.07878)
	"4"	2.001 - 2.004 (0.07878 - 0.07890)

(k) Completely remove the Plastigage.

22. REMOVE CRANKSHAFT

(a) Lift out the crankshaft.

(b) Remove the 5 upper main bearings and 2 thrust washers from the cylinder block.

HINT:
Arrange the main bearings and thrust washers in the correct order.

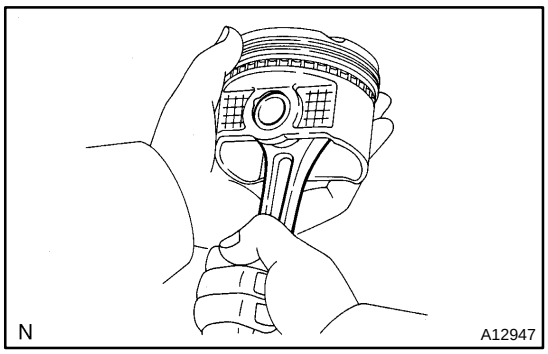

23. CHECK FIT BETWEEN PISTON AND PISTON PIN

Try to move the piston back and forth on the piston pin.
If any movement is felt, replace the piston and pin as a set.

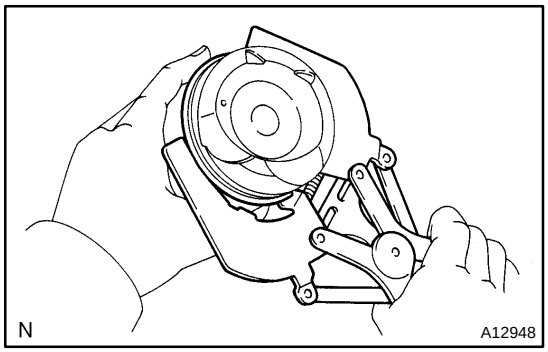

24. REMOVE PISTON RINGS

(a) Using a piston ring expander, remove the 2 compression rings.
(b) Remove the 2 side rails and oil ring by hand.

HINT:
Arrange the piston rings in the correct order only.

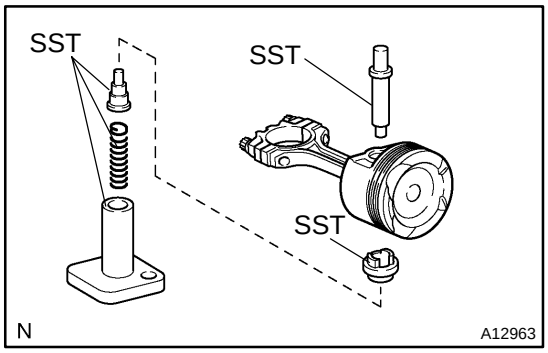

25. DISCONNECT CONNECTING ROD FROM PISTON

Using SST, press out the piston pin from the piston. Remove the piston.

SST 09221- 25026 (09221- 00021, 09221- 00030, 09221-00190, 09221-00141, 09221-00150)

HINT:

- The piston and pin are a matched set.
- Arrange the pistons, pins, rings, connecting rods and bearings in correct order.

EM17D-01

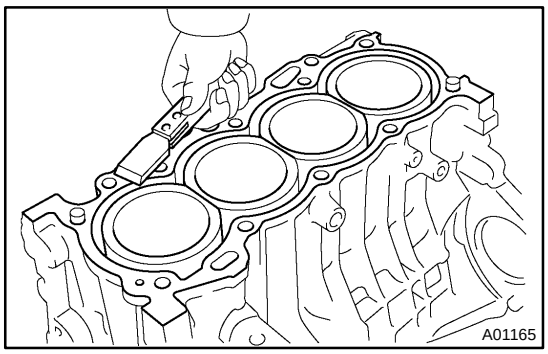

INSPECTION

1. REMOVE GASKET MATERIAL

Using a gasket scraper, remove all the gasket material from the top surface of the cylinder block.

2. CLEAN CYLINDER BLOCK

Using a soft brush and solvent, thoroughly clean the cylinder block.

NOTICE:

If the cylinder is washed at high temperatures, the cylinder liner sticks out beyond the cylinder block, so always wash the cylinder block at a temperature of 45˚C (133˚F) or less.

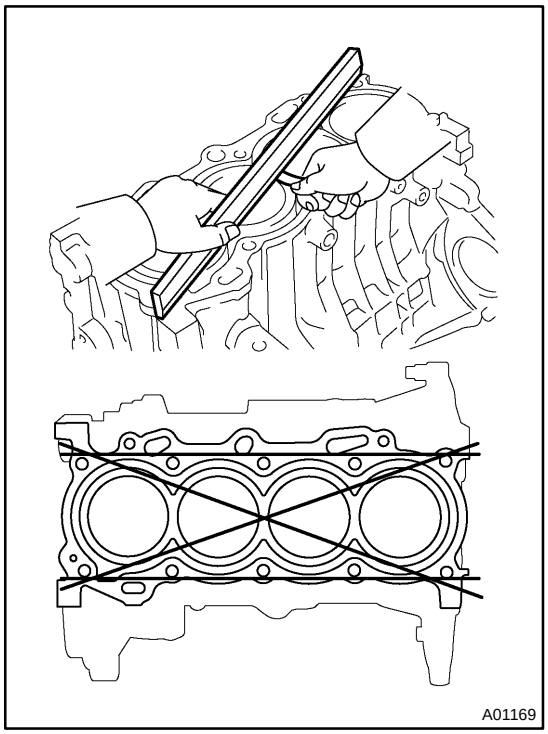

3. INSPECT TOP SURFACE OF CYLINDER BLOCK FOR FLATNESS

Using a precision straight edge and feeler gauge, measure the surface contacting the cylinder head gasket for warpage.

Maximum warpage: 0.05 mm (0.0020 in.)

If warpage is greater than maximum, replace the cylinder block.

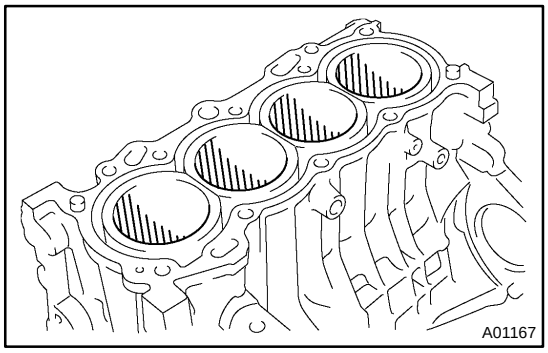

4. INSPECT CYLINDER BORE DIAMETER

Visually check the cylinder for vertical scratches.

If deep scratches are present, replace the cylinder block.

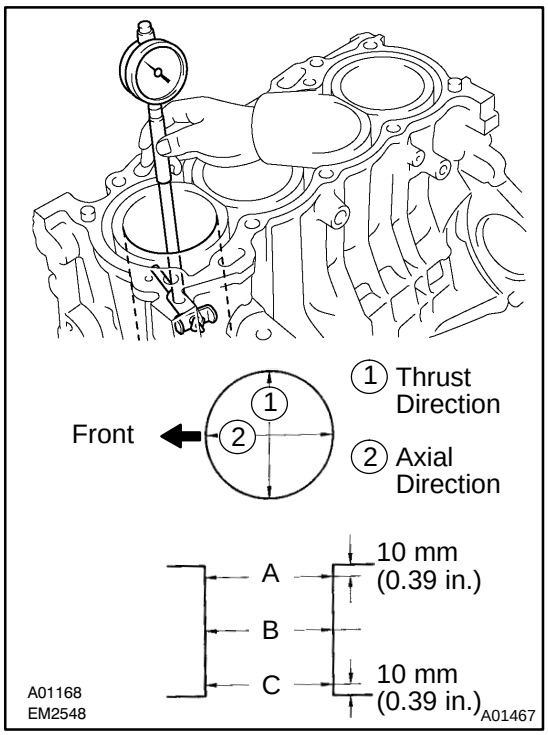

5. INSPECT CYLINDER BORE DIAMETER

Using a cylinder gauge, measure the cylinder bore diameter at positions A, B and C in the thrust and axial directions.

Standard diameter:
75.000 - 75.013 mm (2.95275 - 2.95326 in.)
Maximum diameter:
75.013 mm (2.95326 in.)

If the diameter is greater than maximum, replace the cylinder block.

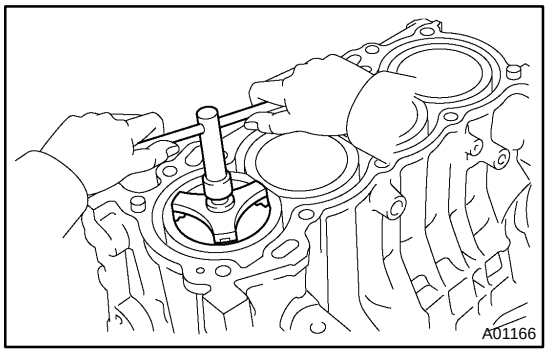

6. REMOVE CYLINDER RIDGE

If the wear is less than 0.2 mm (0.008 in,), using a ridge reamer, grind the top of the cylinder.

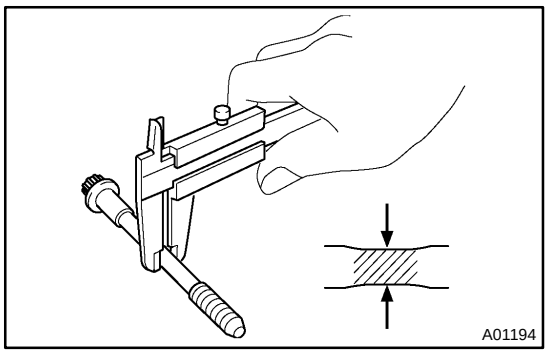

7. INSPECT 12 POINTED HEAD BEARING CAP SUB-ASSEMBLY BOLTS

Using vernier calipers, measure the tension portion diameter of the bolt.

Standard diameter: 7.3 - 7.5 mm (0.287 - 0.295 in.)
Minimum diameter: 7.3 mm (0.287 in.)

If the diameter is less than minimum, replace the bolt.

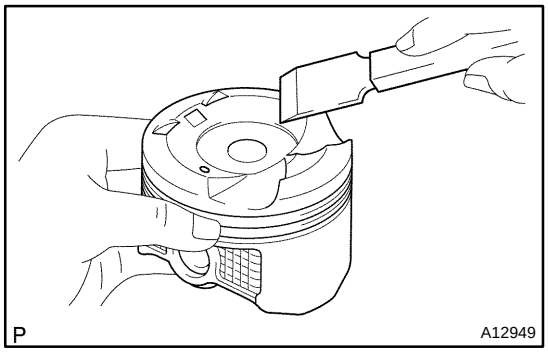

8. CLEAN PISTON

(a) Using a gasket scraper, remove the carbon from the piston top.

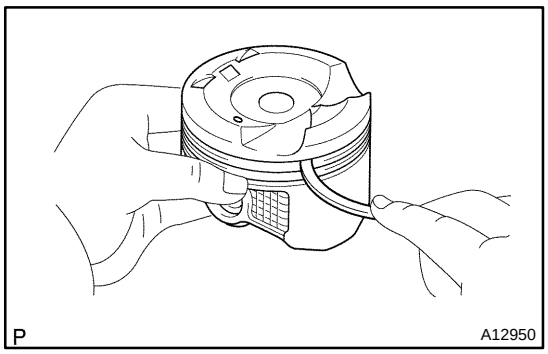

(b) Using a groove cleaning tool or broken ring, clean the piston ring grooves.

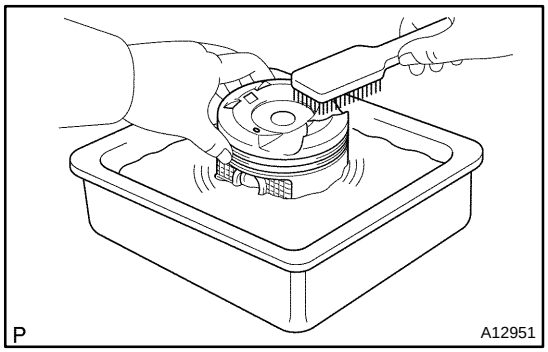

(c) Using solvent and a brush, thoroughly clean the piston.

NOTICE:

Do not use a wire brush.

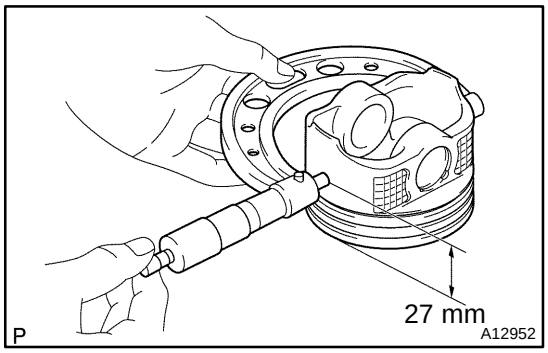

9. INSPECT PISTON OIL CLEARANCE

(a) Using a micrometer, while placing the piston up side down, take measurement at the position of 27 mm (1.06 in.).

Piston diameter:

74.945 - 74.955 mm (2.95058 - 2.95098 in.)

(b) Measure the cylinder bore diameter in the thrust directions. (See procedure in step 5)

(c) Subtract the piston diameter measurement from the cylinder bore diameter measurement.

Standard oil clearance:

0.045 - 0.068 mm (0.00177 - 0.00268 in.)

Maximum oil clearance:

0.08 mm (0.0031 in.)

If the oil clearance is greater than maximum, replace all the 4 pistons. If necessary, replace the cylinder block.

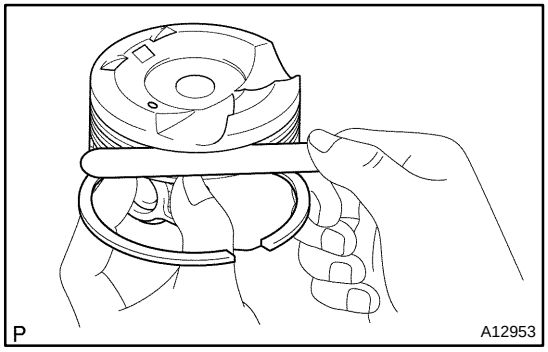

10. INSPECT PISTON RING END GAP

Using a feeler gauge, measure the clearance between new piston ring and the wall of the ring groove.

Ring groove clearance:

0.030 - 0.070 mm (0.0012 - 0.0028 in.)

If the clearance is not as specified, replace the piston.

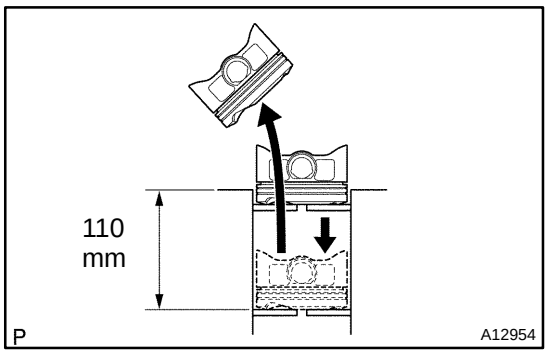

11. INSPECT PISTON RING END GAP

(a) Insert the piston ring into the cylinder bore.

(b) Using a piston, push the piston ring a little beyond the bottom of the ring travel, 110 mm (4.33 in.) from the top of the cylinder block.

(c) Using a feeler gauge, measure the end gap.

Standard end gap:
No.1 0.25 - 0.35 mm (0.0098 - 0.0138 in.)
No.2 0.35 - 0.50 mm (0.0138 - 0.0197 in.)
Oil (Side rail) 0.10 - 0.35 mm (0.0039 - 0.0138 in.)
Maximum end gap:
No.1 0.91 mm (0.0358 in.)
No.2 1.06 mm (0.0417 in.)
Oil (Side rail) 0.82 mm (0.0323 in.)

If the end gap is greater than maximum, replace the piston ring.
If the end gap is greater than maximum, even with a new piston ring, replace the cylinder block.

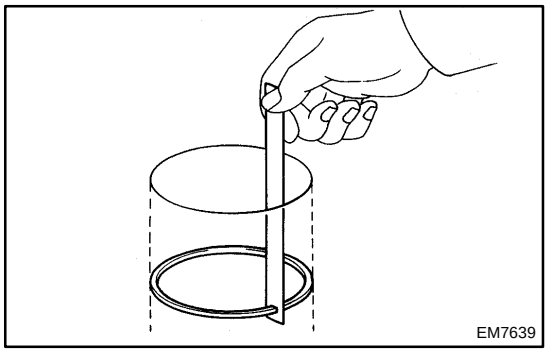

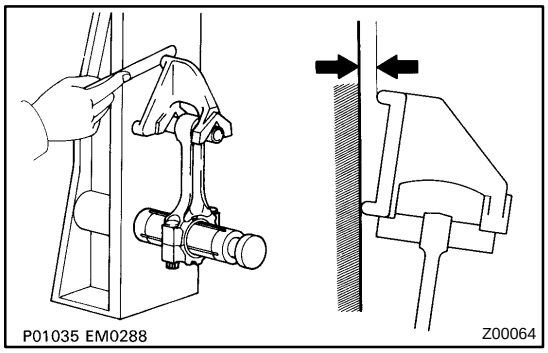

12. INSPECT CONNECTING ROD ALIGNMENT

Using a rod aligner and feeler gauge, check the connecting rod alignment.

- Check for out-of-alignment

Maximum out-of alignment:
0.05 mm (0.0020 in.) per 100 mm (3.94 in.)

If out-of alignment is greater than maximum, replace the connecting rod assembly.

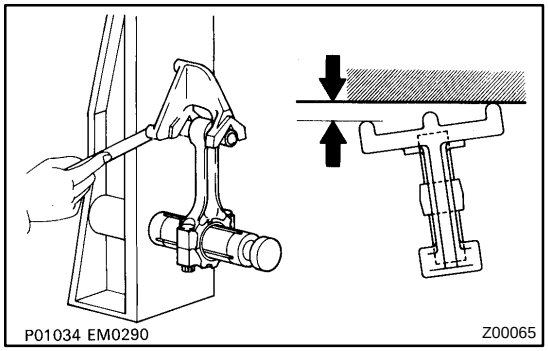

- Check for twist

Maximum twist:
0.05 mm (0.0020 in.) per 100 mm (3.94 in.)

If twist is greater than maximum, replace the connecting rod assembly.

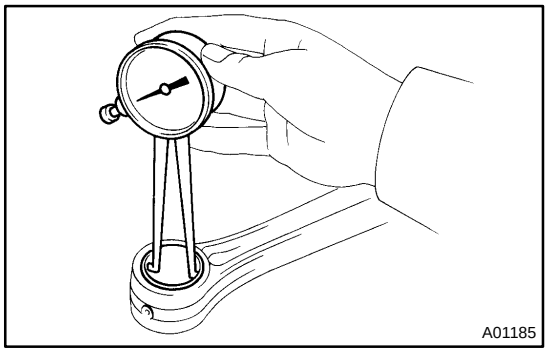

13. INSPECT PISTON PIN OIL CLEARANCE

(a) Using a caliper gauge, measure the inside diameter of the connecting rod bushing.

Bushing inside diameter:
18.010 - 18.019 mm (0.7091 - 0.7094 in.)

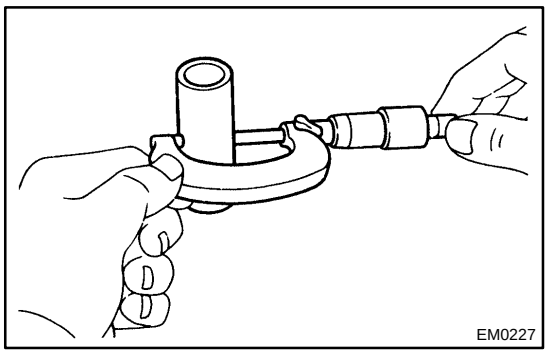

(b) Using a micrometer, measure the piston pin diameter.
Piston pin diameter:
17.988 - 18.007 mm (0.7086 - 0.7089 in.)

(c) Subtract the piston pin diameter measurement from the bushing inside diameter measurement.
Standard oil clearance:
0.009 - 0.015 mm (0.0003 - 0.0006 in.)
Maximum oil clearance:
0.05 mm (0.0020 in.)

If the oil clearance is greater than maximum, replace the bushing. If necessary, replace the piston and piston pin as a set.

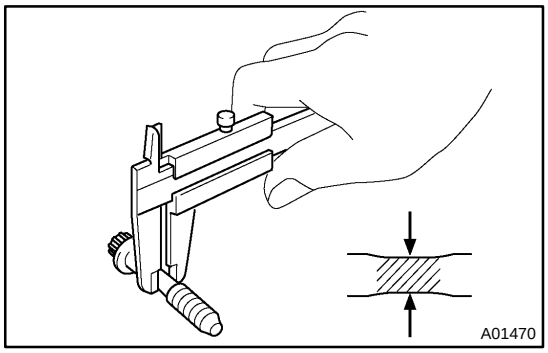

14. INSPECT CONNECTING ROD BOLTS

Using a vernier calipers, measure the tension portion diameter of the bolt.

Standard diameter: 6.6 - 6.7 mm (0.260 - 0.264 in.)
Minimum diameter: 6.4 mm (0.252 in.)

If the diameter is less than minimum, replace the bolt.

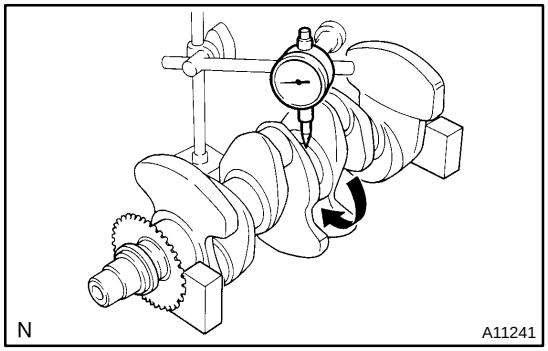

15. INSPECT CRANKSHAFT FOR CIRCLE RUNOUT

(a) Place the crankshaft on V-blocks.

(b) Using a dial indicator, measure the circle runout, as shown in the illustration.
Maximum circle runout: 0.03 mm (0.0012 in.)

If the circle runout is greater than maximum, replace the crankshaft.

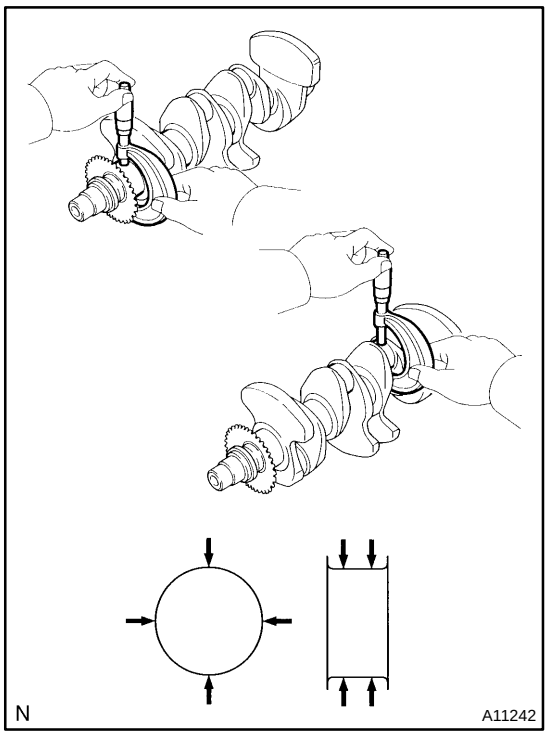

16. INSPECT MAIN JOURNALS AND CRANK PINS

(a) Using a micrometer, measure the diameter of each main journal and crank pin.

Main journal diameter:
46.000 - 46.012 mm (1.81102 - 1.81149 in.)
Crank pin diameter:
39.992 - 40.000 mm (1.5745 - 1.5748 in.)

If the diameter is not as specified, check the oil clearance (See page EM-63).

If necessary, replace the crankshaft.

(b) Check each main journal and crank pin for taper and out-of-round as shown.

Maximum taper and out-of-round:
0.02 mm (0.0008 in.)

If the taper and out-of round is greater than maximum, replace the crankshaft.

EM17F-01

REASSEMBLY

HINT:

- Thoroughly clean all parts to be assembled.
- Before installing the parts, apply fresh engine oil to all sliding and rotating surfaces.
- Replace all gaskets, O-rings and oil seals with new parts.

1. ASSEMBLE PISTON AND CONNECTING ROD

(a) Gradually heat the piston side of connecting rod to 80 - 90˚C (176 - 194˚F).

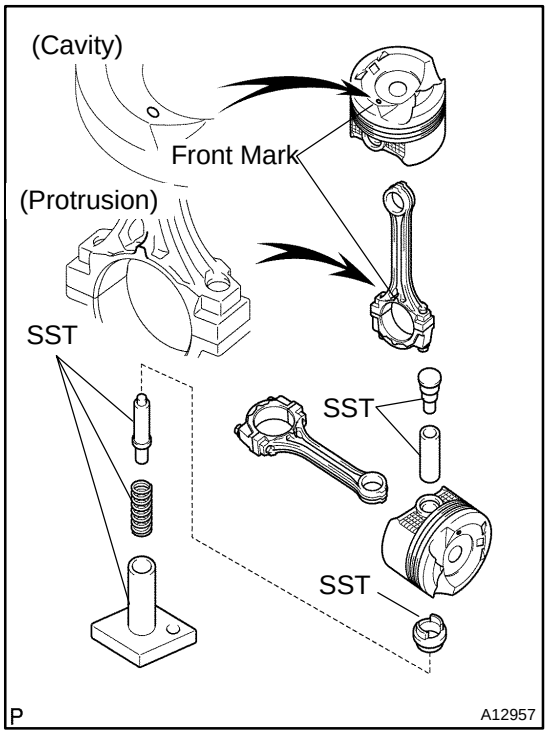

(b) Coat the piston pin and pin holes of the piston with engine oil.

(c) Align the cavity on the piston with the protrusion on the connecting rod.

(d) Using SST, press in the piston pin.
SST 09221- 25026 (09221- 00021, 09221- 00030, 09221-00190, 09221-00141, 09221-00150)

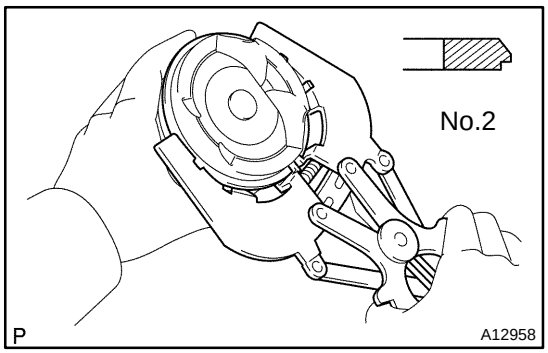

2. INSTALL PISTON RINGS

(a) Install the oil ring expander and 2 side rails by hand.

(b) Using a piston ring expander, install the 2 compression rings.

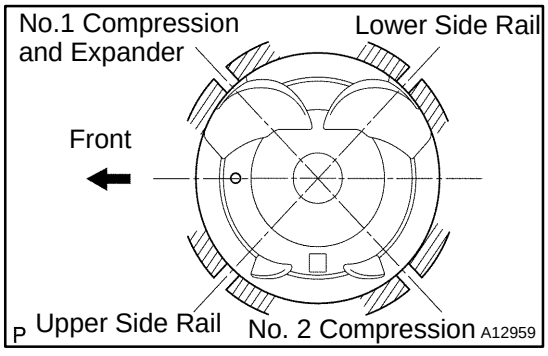

(c) Position the piston rings so that the ring ends are as shown.

NOTICE:
Do not align the ring ends.

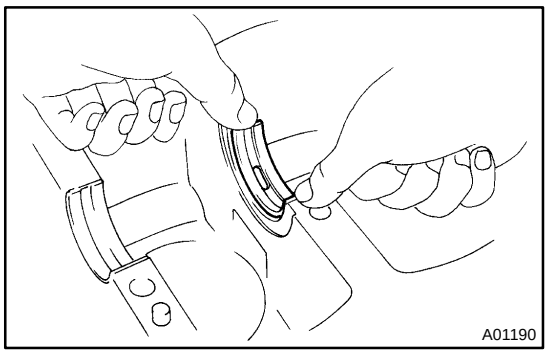

3. Supply parts:
INSTALL MAIN BEARINGS

HINT:

Upper bearings have an oil groove and oil holes; Lower bearings do not.

(a) Align the bearing claw with the claw groove of the cylinder block, and push in the 5 upper bearings.

NOTICE:

Install the bearing with the oil hole in the cylinder block.

(b) Align the bearing claw with the claw grove of the main bearing cap, and push in the 5 lower bearings.

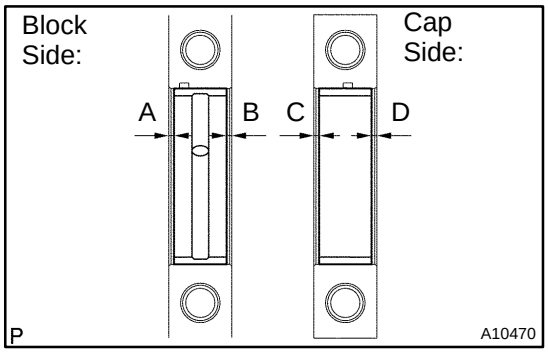

4. Manufacture parts:
INSTALL MAIN BEARINGS

HINT:

Upper bearings have an oil groove and oil holes; Lower bearings do not.

Measure the clearance on both sides of the bearing and install it so that the difference between measured values will be within the specified bellow.

Specified clearance:
A - B = 0.8 mm (0.032 in.)
C - D = 0.4 mm (0.016 in.)

5. PLACE CRANKSHAFT ON CYLINDER BLOCK

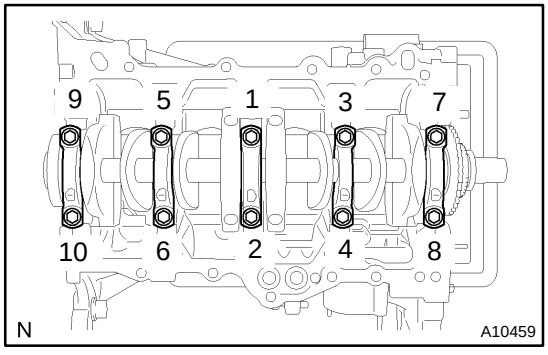

6. INSTALL BEARING CAPS

(a) Install the 5 bearing caps.

HINT:

Each bearing cap has a number and front mark.

(b) Apply a light coat of engine oil on the threads and under the head of the bearing cap bolts.

(c) Install and uniformly tighten the 10 bolts of the bearing cap is several passes, in the sequence shown.
Torque:
1ST 22 N·m (220 kgf·cm, 16 ft·lbf)
2ND Turn 90 °

(d) Check that the crankshaft turns smoothly.

7. CHECK CRANKSHAFT THRUST CLEARANCE (See page EM-63)

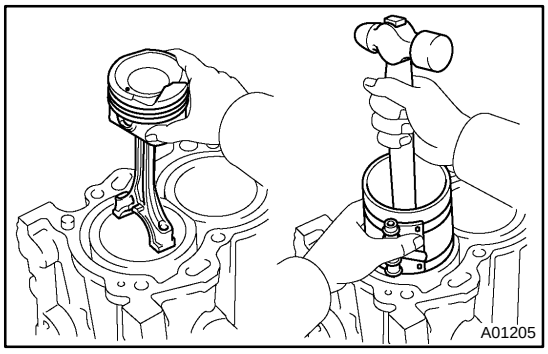

8. INSTALL PISTON AND CONNECTING ROD ASSEMBLES

Using a piston ring compressor, push the correctly numbered piston and connecting rod assemblies into each cylinder with the front mark of the piston facing forward.

9. PLACE CONNECTING ROD CAP ON CONNECTING ROD

(a) Match the numbered connecting rod cap with the connecting rod.

(b) Align the pin dowels of the connecting rod cap with the pins of the connecting rod, and install the connecting rod.

(c) Check that the protrusion of the connecting rod cap is facing in the correct direction.

10. INSTALL CONNECTING ROD CAP BOLTS

HINT:

- The connecting rod cap bolts are tightened in 2 progressive steps (steps (b) and (d)).
- If any of the connecting rod cap bolts is broken or deformed, replace it.

(a) Apply a light coat of engine oil on the threads and under the heads of the connecting rod cap bolts.

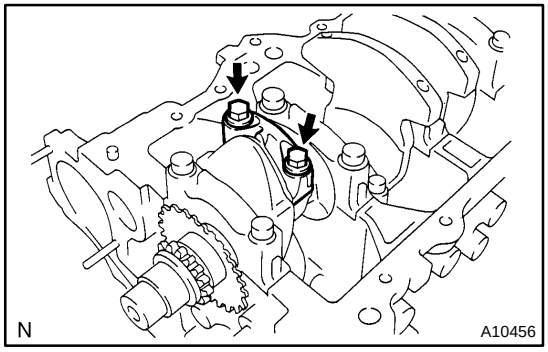

(b) Install and alternately tighten the 2 connecting rod cap bolts in several passes.
Torque:
1ST 15 N·m (150 kgf·cm, 11 ft·lbf)
2ND Turn 90 °

If any of the connecting rod cap bolts does not meet the torque specification, replace the connecting rod cap bolts.

11. CHECK CONNECTING ROD THRUST CLEARANCE (See page EM-63)

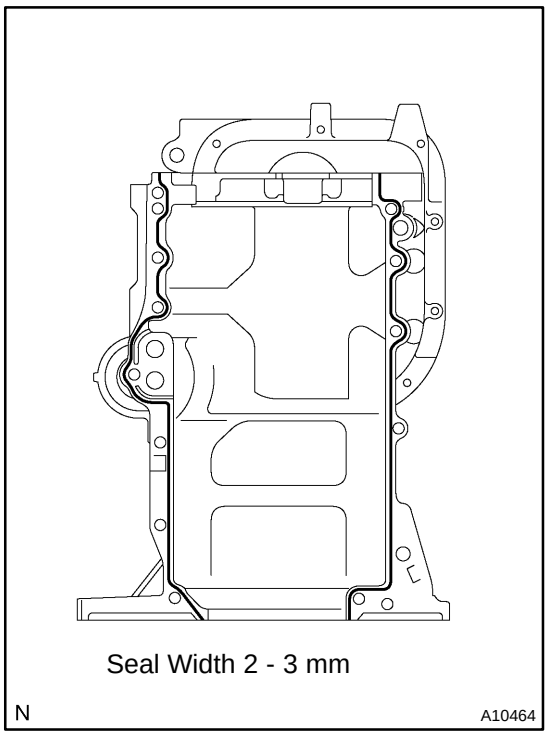

12. INSTALL OIL PAN NO. 1

(a) Remove any old packing (FIPG) material and be careful not to drop any oil on the contact surface of the oil pan No. 1 and cylinder block.
- Using a razor blade and gasket scraper, remove all the old packing (FIPG) material from the gasket surfaces and sealing grooves.
- Thoroughly clean all components to remove all the loose material.
- Using a non-residue solvent, clean both sealing surfaces.

(b) Apply seal packing to the oil pan No. 1 as shown in the illustration.

Seal packing:

Part No. 08826-00080 or equivalent
- Install a nozzle that has been cut to a 2 - 3 mm (0.08 - 0.12 in.) opening.

HINT:

Avoid applying an excessive amount to the surface.
- Parts must be assembled within 3 minutes of application. Otherwise the material must be remove d and reapplied.
- Immediately remove nozzle from the tube and reinstall cap.

(c) Install new O-rings to the cylinder block.

(d) Using a plastic-faced hammer, lightly tap the oil pan No. 1 to ensure a proper fit.

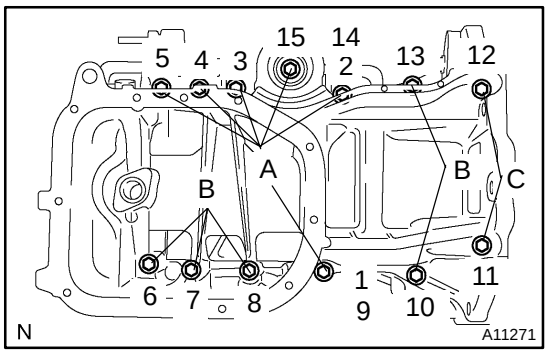

(e) Install and uniformly tighten the 13 bolts, in several passes, in the sequence shown.

Torque: 24 N·m (245 kgf·cm, 18 ft·lbf)

HINT:

Each bolt length in indicated in the illustration.

A: 49 mm (1.929 in.)

B: 88 mm (3.465 in.)

C: 144 mm (5.669 in.)

13. INSTALL REAR CRANKSHAFT OIL SEAL

(See page EM-76)

HINT:

Wipe seal packing away from the contact surface of the cylinder block assembly and oil seal.

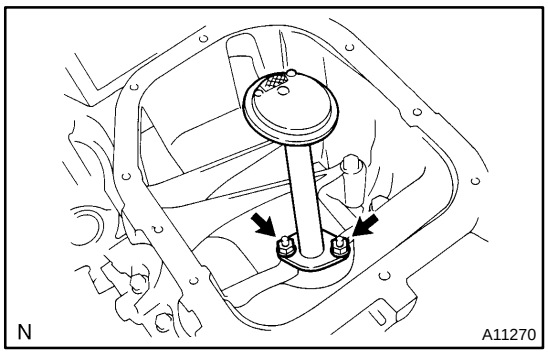

14. INSTALL OIL STRAINER

Install a new gasket, and oil strainer with the 2 nuts.

Torque: 11 N·m (112 kgf·cm, 8 ft·lbf)

15. INSTALL OIL PAN

(a) Remove any old packing (FIPG) material and be careful not to drop any oil on the contact surface of the main bearing cap and oil pan.

- Using a razor blade and gasket scraper, remove all the old packing (FIPG) material from the gasket surfaces and sealing grooves.
- Thoroughly clean all components to remove all the loose material.
- Using a non-residue solvent, clean both sealing surfaces.

NOTICE:

Do not use a solvent which will affect the painted surfaces.

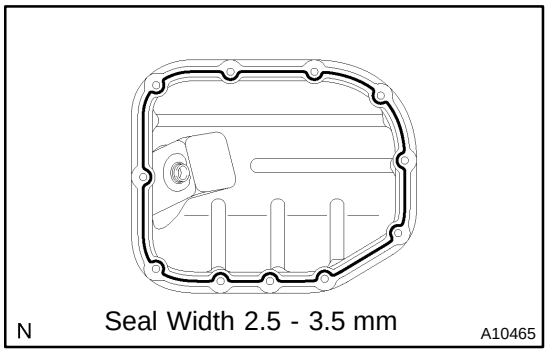

(b) Apply seal packing to the oil pan as shown in the illustration.

Seal packing:

Part No. 08826-00080 or equivalent

- Install a nozzle that has been cut to a 2.5 - 3.5 mm (0.098 - 0.138 in.) opening.

HINT:

Avoid applying an excessive amount to the surface.

- Parts must be assembled within 3 minutes of application. Otherwise the material must be remove d and reapplied.
- Immediately remove nozzle from the tube and reinstall cap.

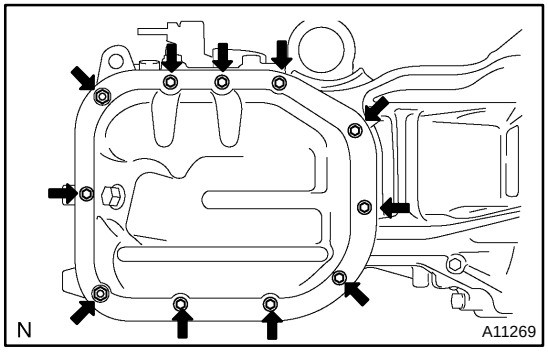

(c) Install the oil pan with the 9 bolts and 2 nuts. Uniformly tighten the bolts and nuts in several passes.

Torque: 9.0 N·m (92 kgf·cm, 80 in.·lbf)

16. INSTALL OIL FILTER UNION

Torque: 30 N·m (306 kgf·cm, 21 ft·lbf)

17. INSTALL OIL FILTER (See page LU-2)

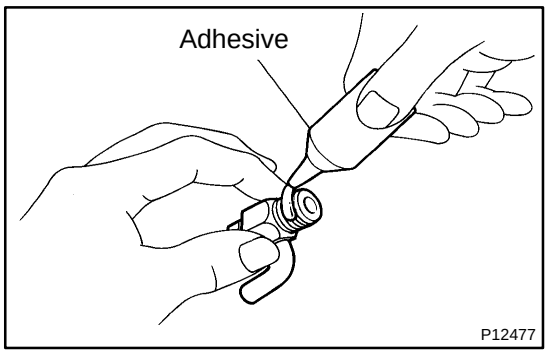

18. INSTALL ENGINE COOLANT DRAIN UNION

(a) Apply adhesive to 2 or 3 threads.
Adhesive:
Part No. 08833-00080, THREE BOND 1344, LOCTITE 242 or equivalent

(b) Install the drain union.
Torque: 35 N·m (350 kgf·cm, 25 ft·lbf)

HINT:
After applying the specified torque, rotate the drain union clockwise until its drain port is facing downward.

19. INSTALL KNOCK SENSOR
Torque: 39 N·m (400 kgf·cm, 29 ft·lbf)

20. INSTALL OIL PRESSURE SWITCH
(See page LU-1)

21. INSTALL THERMOSTAT (See page CO-10)

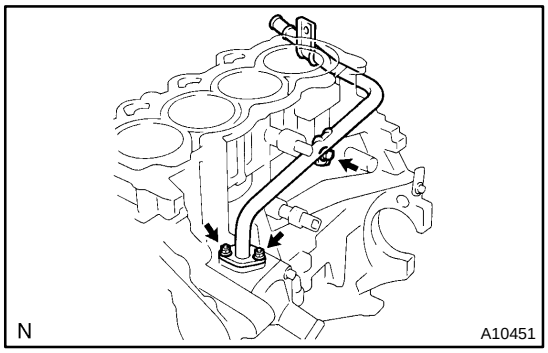

22. INSTALL WATER BYPASS PIPE
Torque: 9.0 N·m (92 kgf·cm, 80 in.·lbf)

23. INSTALL ENGINE WIRE

24. INSTALL CYLINDER HEAD (See page EM-44)

25. INSTALL TIMING SPROCKETS AND TIMING CHAIN (See page EM-20)

26. REMOVE ENGINE STAND

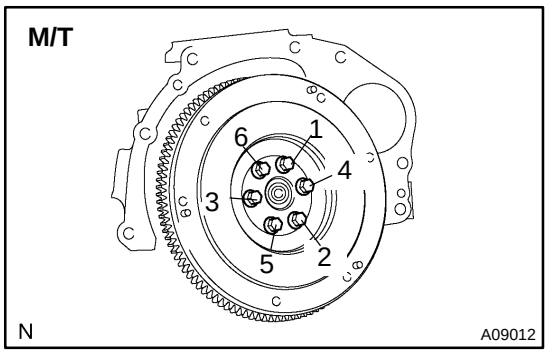

27. M/T:
INSTALL FLYWHEEL

HINT:
The flywheel bolts are tightened in 2 progressive steps, (a) and (c).

(a) Install and uniformly tighten the 6 mounting bolts, in several passes, in the sequence shown.
Torque: 49 N·m (500 kgf·cm, 36 ft·lbf)

(b) Mark the flywheel bolt with paint.

(c) Retighten the flywheel bolts by an additional 90°.

(d) Check that the painted mark in now at a 90° angle to (b).

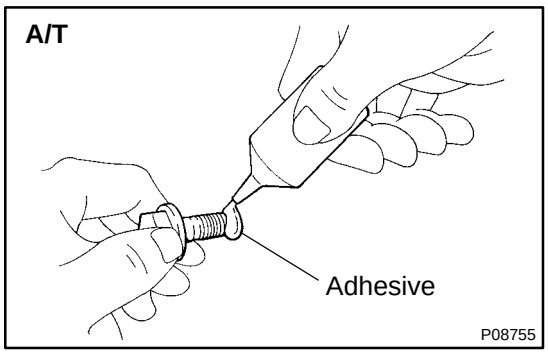

28. A/T:
INSTALL DRIVE PLATE

(a) Install the front spacer, drive plate and rear plate on the crankshaft.

(b) Apply adhesive to 2 or 3 threads of the mounting bolt end,
Adhesive:
Part No. 08833-00070, THREE BOND or equivalent

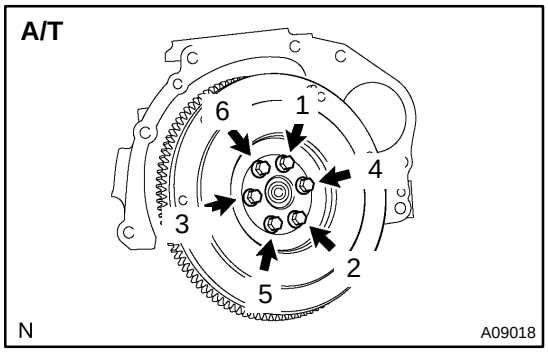

(c) Install and uniformly tighten the 6 mounting bolts, in several passes, in the sequence shown.
Torque: 88 N·m (890 kgf·cm, 65 ft·lbf)

EM17E-01

REPLACEMENT

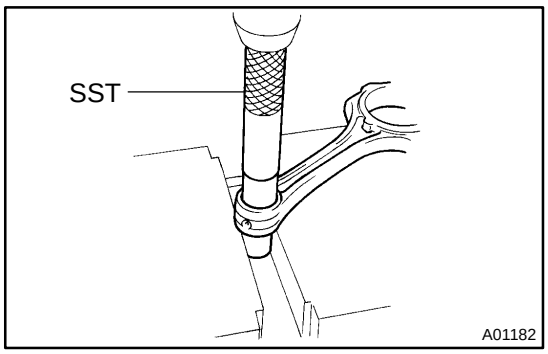

1. REPLACE CONNECTING ROD BUSHINGS

(a) Using SST and a press, press out the bushing.
SST 09222-30010

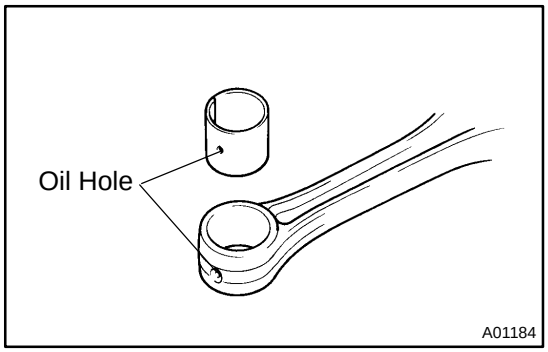

(b) Align the oil hoses of a new bushing and the connecting rod.

(c) Using SST and a press, press in the bushing.
SST 09222-30010

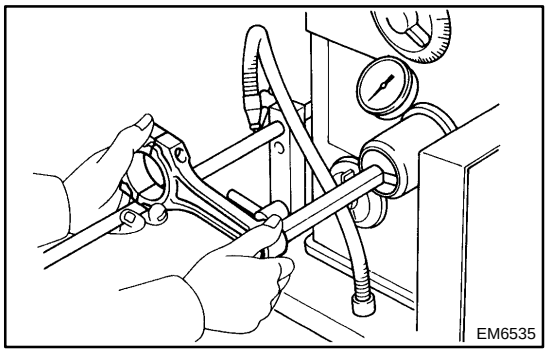

(d) Using a pin hole grinder, hone the bushing to obtain the standard specified clearance (See page EM-70) between the bushing and piston pin.

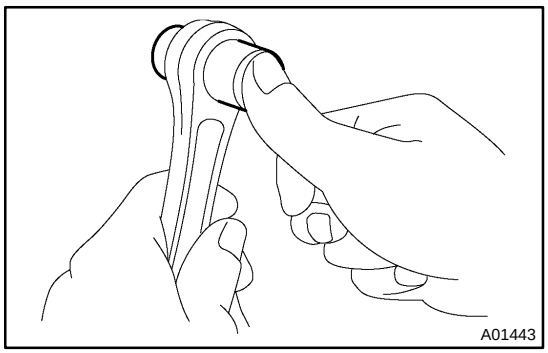

(e) Check the piston pin fit at normal room temperature. Coat the piston pin with engine oil, and push it into the connecting rod with your thumb.

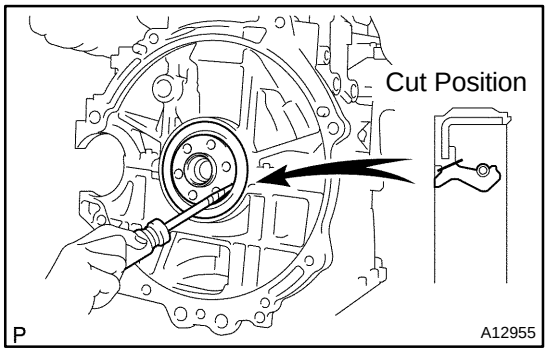

2. REPLACE CRANKSHAFT REAR OIL SEAL

If rear oil seal is installed to cylinder block

(a) Using a knife cut off the oil seal lip.

(b) Using a screwdriver, pry out the oil seal.

NOTICE:

Be careful not to damage the crankshaft. Tape the screwdriver tip.

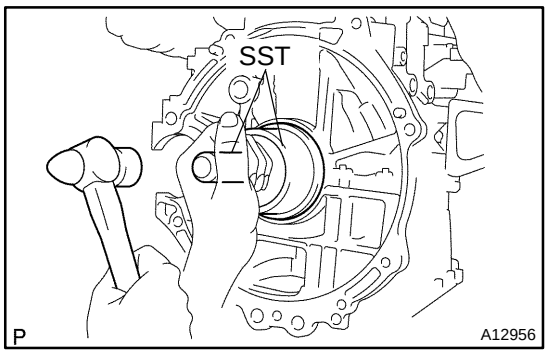

(c) Apply MP grease to a new oil seal lip.

(d) Using SST and a hammer, tap in the oil seal until its surface is flush with the rear oil seal retainer edge.
SST 09223-15030, 09950-70010 (09951-07100)

CYLINDER HEAD

COMPONENTS

EM16H-01

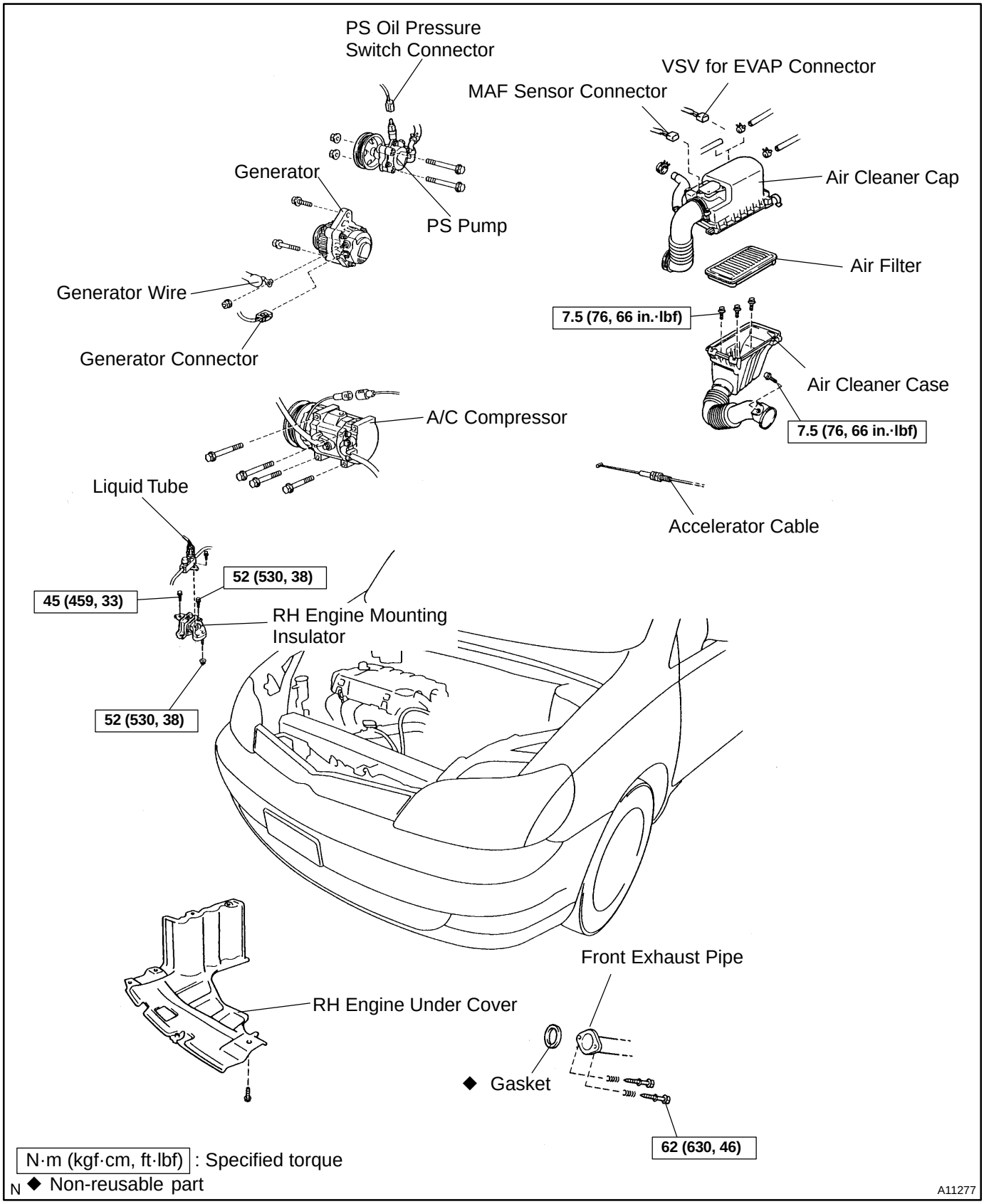

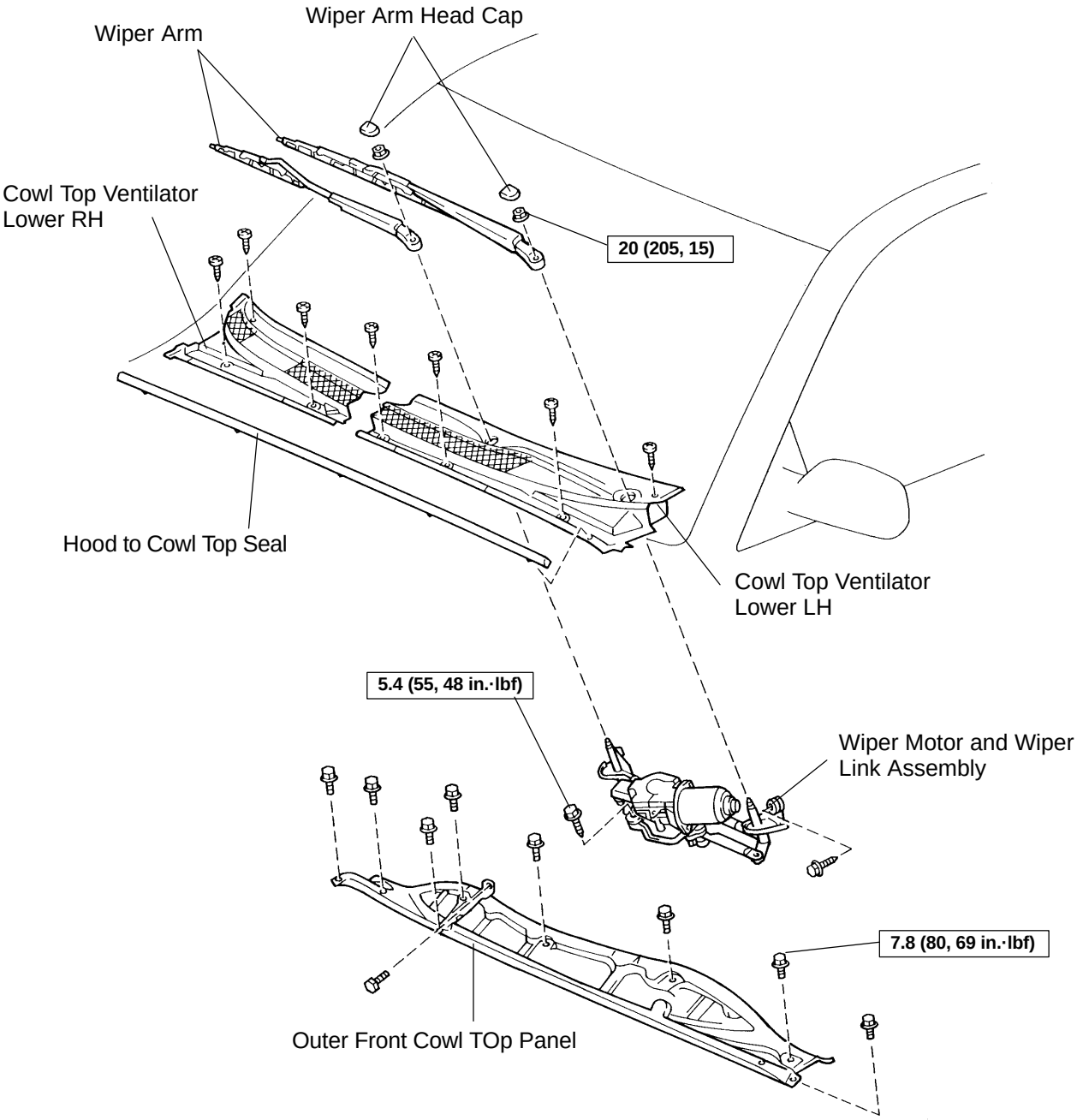

N

N·m (kgf·cm, ft·lbf) : Specified torque

A11283

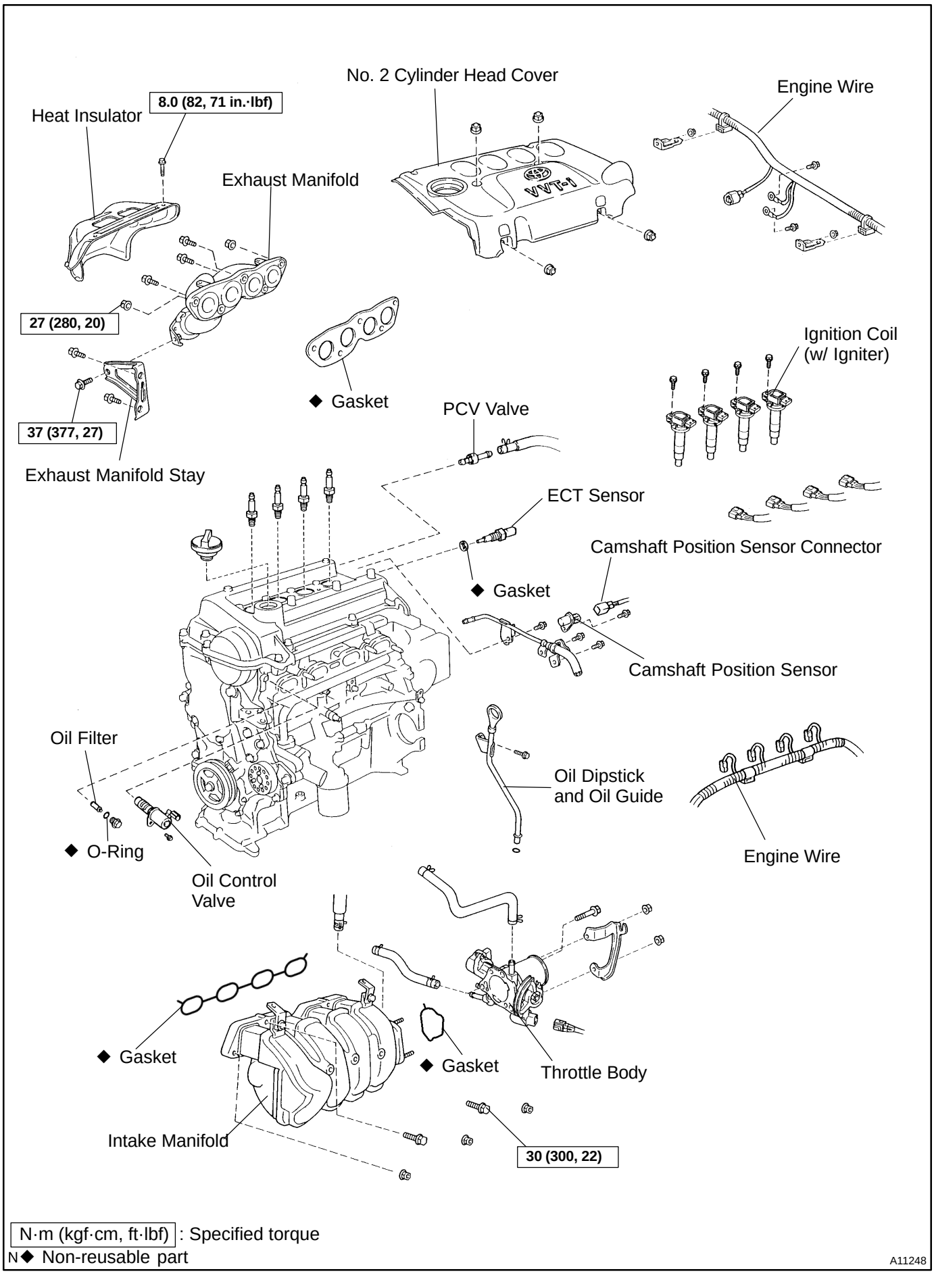

N·m (kgf·cm, ft·lbf) : Specified torque

N◆ Non-reusable part

A11248

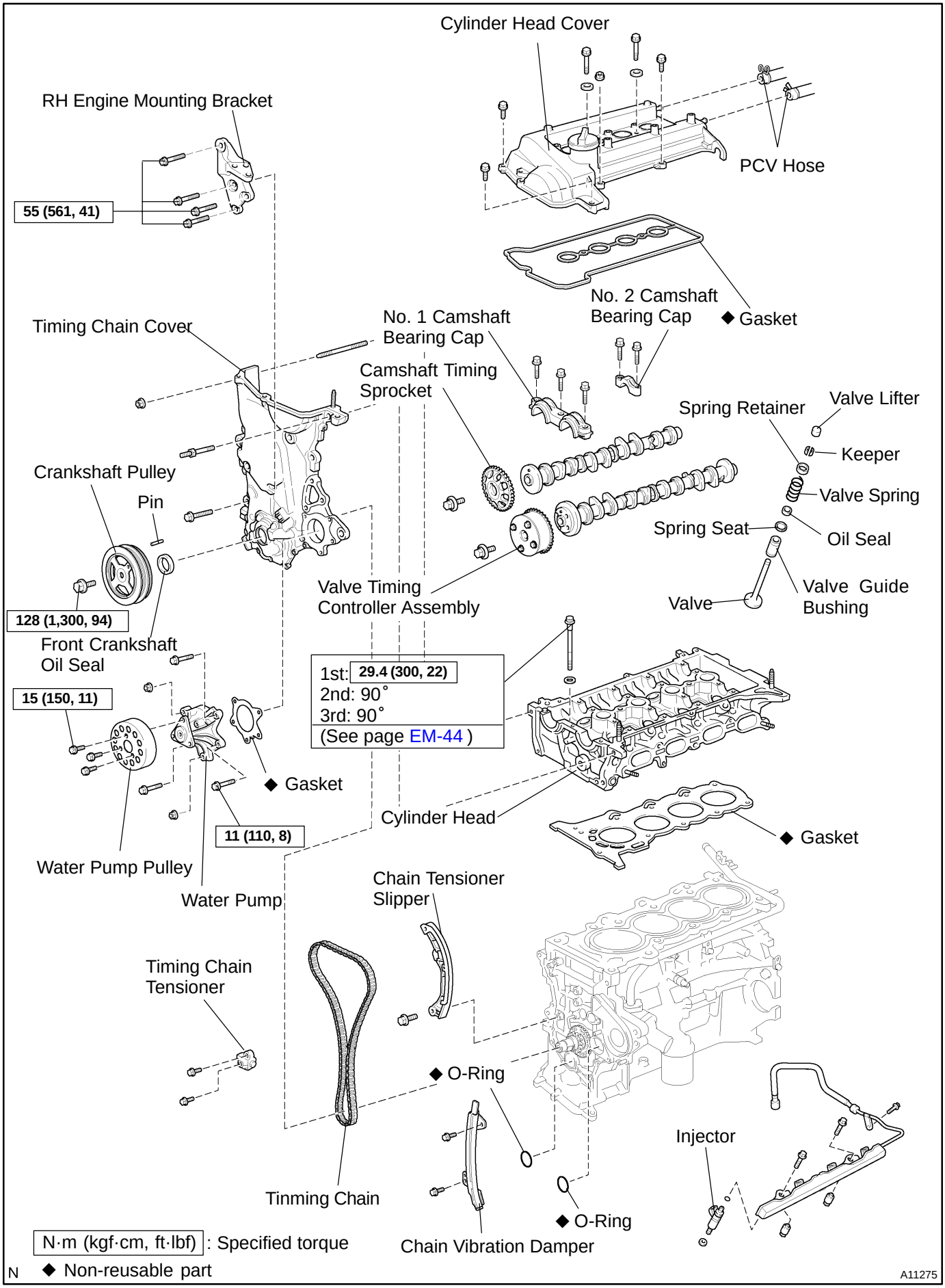
Cylinder Head Cover
RH Engine Mounting Bracket
PCV Hose
55 (561, 41)
No. 2 Camshaft Bearing Cap
◆ Gasket
Timing Chain Cover
No. 1 Camshaft Bearing Cap
Camshaft Timing Sprocket
Spring Retainer
Valve Lifter
Keeper
Crankshaft Pulley
Pin
Valve Spring
Spring Seat
Oil Seal
Valve Timing Controller Assembly
Valve
Valve Guide Bushing
128 (1,300, 94)
Front Crankshaft Oil Seal
1st: 29.4 (300, 22)
2nd: 90°
3rd: 90°
(See page EM-44)
15 (150, 11)
◆ Gasket
Cylinder Head
◆ Gasket
11 (110, 8)
Water Pump Pulley
Water Pump
Chain Tensioner Slipper
Timing Chain Tensioner
◆ O-Ring
Injector
Tinming Chain
◆ O-Ring
Chain Vibration Damper
N·m (kgf·cm, ft·lbf) : Specified torque
◆ Non-reusable part
N
A11275

EM16J-01

DISASSEMBLY

1. REMOVE VALVE LIFTERS

HINT:

Arrange the valve lifters in the correct order.

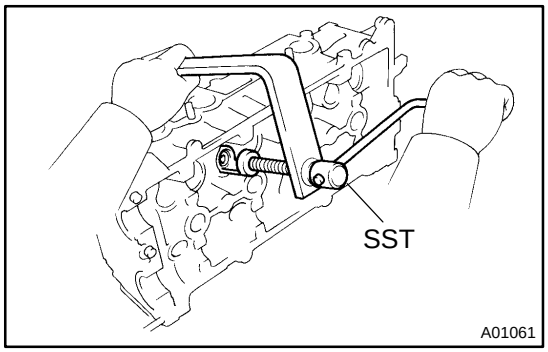

2. REMOVE VALVES

(a) Using SST, compress the valve spring and remove the 2 keepers.

SST 09202-70020 (09202-00010)

(b) Remove the spring retainer.

(c) Remove the valve spring.

(d) Remove the valve.

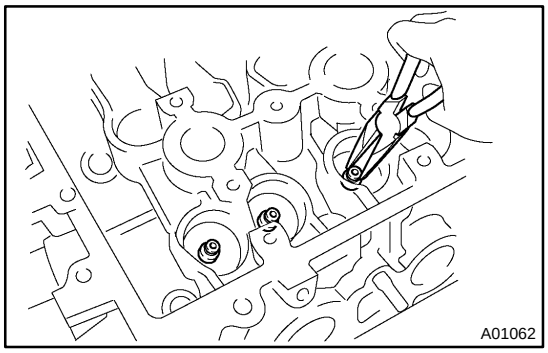

(e) Using needle-nose pliers, remove the oil seal.

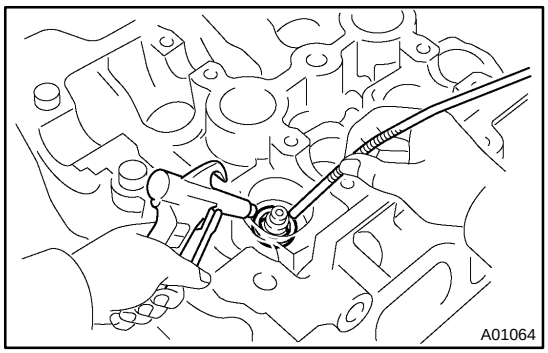

(f) Using compressed air and a magnetic finger, remove the spring seat by blowing air.

HINT:

Arrange the valves, valve springs, spring seats and spring retainers in the correct order.

EM16K-01

INSPECTION

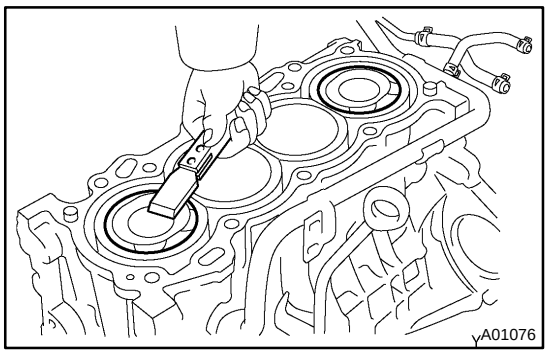

1. CLEAN TOP SURFACES OF PISTONS AND CYLINDER BLOCK

(a) Turn the crankshaft, and bring each piston to top dead center (TDC). Using a gasket scraper, remove all the carbon from the piston surface.

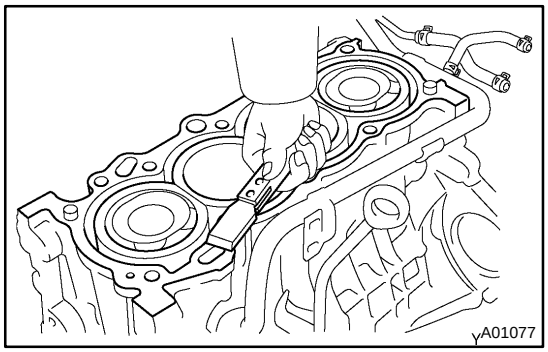

(b) Using a gasket scraper, remove all the gasket material from the cylinder block surface.

(c) Using compressed air, blow carbon and oil from the bolt holes.

CAUTION:

Protect your eyes when using high pressure compressed air.

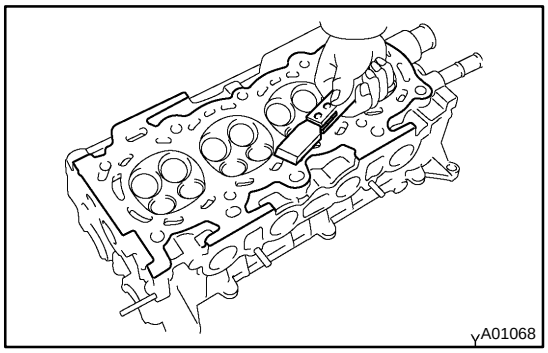

2. REMOVE GASKET MATERIAL

Using a gasket scraper, remove all the gasket material from the cylinder block contact surface.

NOTICE:

Be careful not to scratch the cylinder block contact surface.

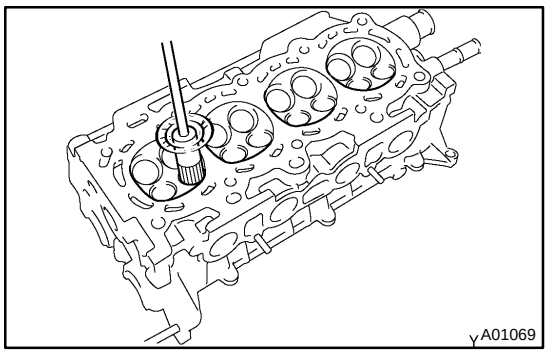

3. CLEAN COMBUSTION CHAMBERS

Using a wire brush, remove all the carbon from the combustion chambers.

NOTICE:

Be careful not to scratch the cylinder block contact surface.

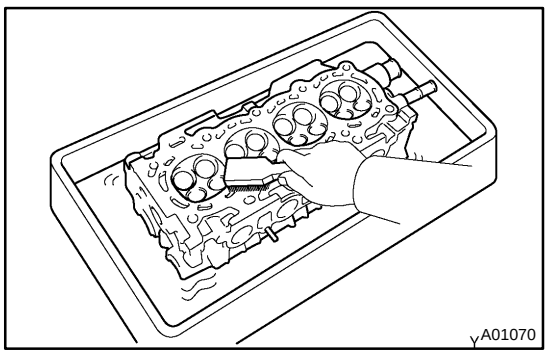

4. CLEAN CYLINDER HEAD

Using a soft brush and solvent, thoroughly clean the cylinder head.

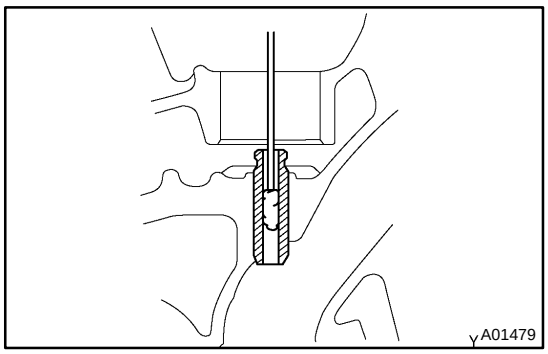

5. CLEAN VALVE GUIDE BUSHINGS

Using a valve guide bushing brush and solvent, clean all the guide bushings.

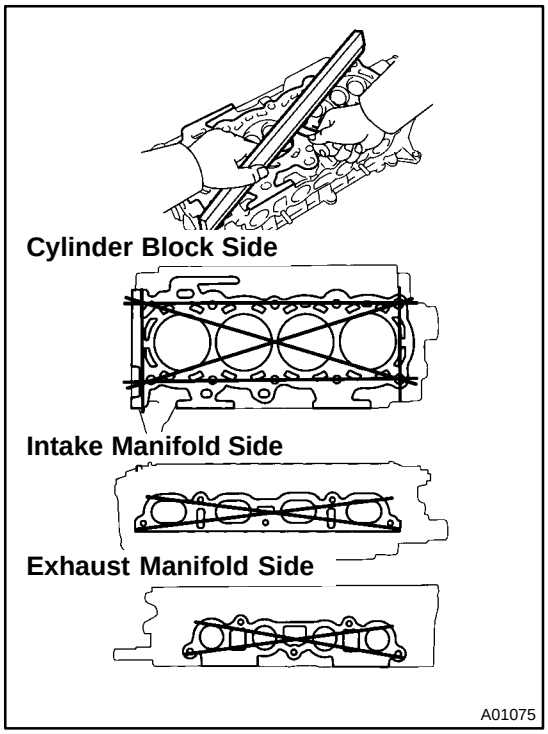

6. INSPECT FOR FLATNESS

Using a precision straight edge and feeler gauge, measure the surface contacting the cylinder block and the manifolds for warpage.

Maximum warpage: 0.05 mm (0.0020 in.)

If warpage is greater than maximum, replace the cylinder head.

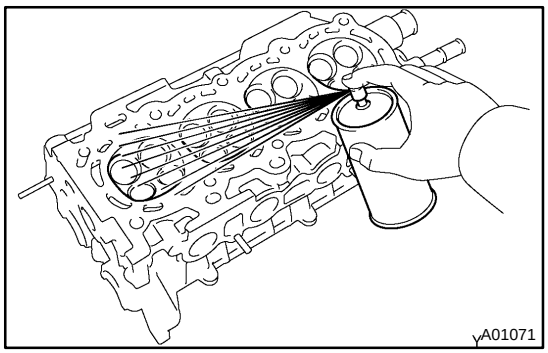

7. INSPECT FOR CRACKS

Using a dye penetrant, check the combustion chamber, intake ports, exhaust ports and cylinder block surface for cracks.
If cracked, replace the cylinder head.

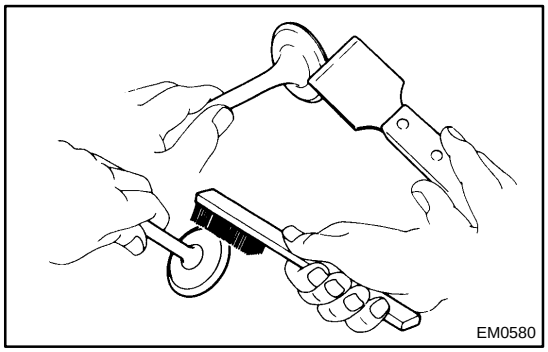

8. CLEAN VALVES

(a) Using a gasket scraper, chip off any carbon from the valve head.
(b) Using a wire brush, thoroughly clean the valve.

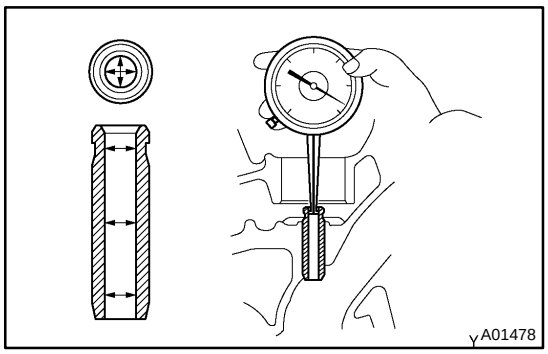

9. INSPECT VALVE STEMS AND GUIDE BUSHINGS

(a) Using a caliper gauge, measure the inside diameter of the guide bushing.

Bushing inside diameter:
5.010 - 5.030 mm (0.19724 - 0.19803 in.)

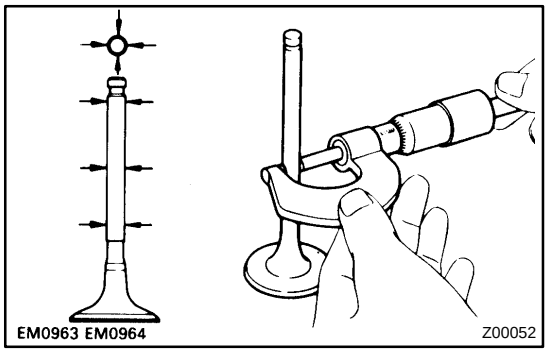

(b) Using a micrometer, measure the diameter of the valve stem.

Valve stem diameter:
Intake 4.970 - 4.985 mm (0.19567 - 0.19626 in.)
Exhaust 4.965 - 4.980 mm (0.19547 - 0.19606 in.)

(c) Subtract the valve stem diameter measurement from the guide bushing inside diameter measurement.

Standard oil clearance:
Intake 0.025 - 0.060 mm (0.00098 - 0.00236 in.)
Exhaust 0.030 - 0.065 mm (0.00118 - 0.00256 in.)
Maximum oil clearance:
Intake 0.08 mm (0.0031 in.)
Exhaust 0.10 mm (0.0039 in.)

If the clearance is greater than maximum, replace the valve and guide bushing.

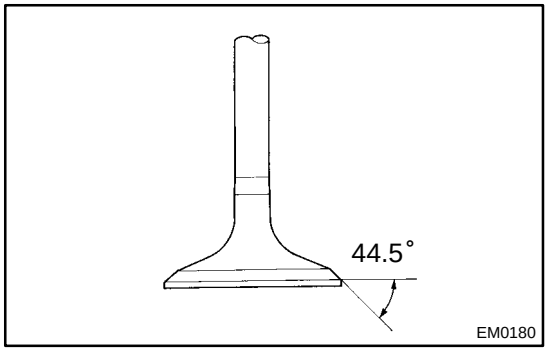

10. INSPECT VALVES

(a) Check the valve is ground to the correct valve face angle.

Valve face angle: 44.5°

(b) Check that the surface of the valve for wear.

If the valve face is worn, replace the valve.

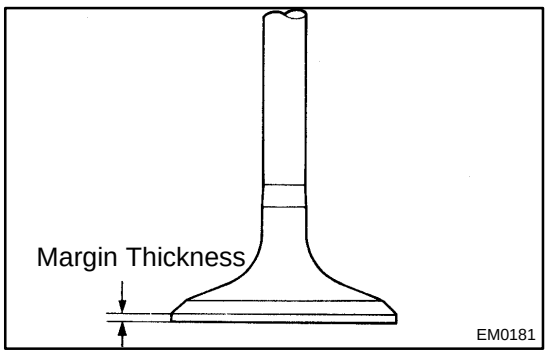

(c) Check the valve head margin thickness.

Standard margin thickness:
1.00 - 1.15 mm (0.0393 - 0.0453 in.)
Minimum margin thickness: 0.7 mm (0.028 in.)

If the margin thickness is less than minimum, replace the valve.

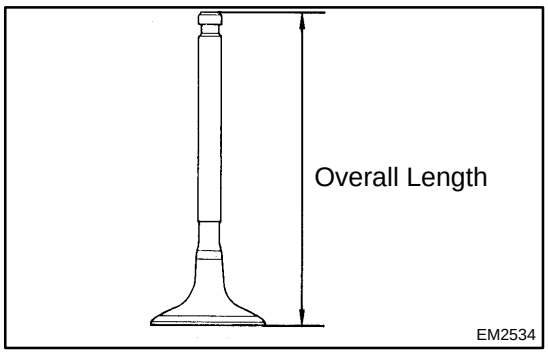

(d) Check the valve overall length.
Standard overall length:
Intake 89.25 mm (3.5138 in.)
Exhaust 87.90 mm (3.4606 in.)
Minimum overall length:
Intake 88.75 mm (3.4941 in.)
Exhaust 87.40 mm (3.4409 in.)

If the overall length is less than minimum, replace the valve.

(e) Check the surface of the valve stem tip for wear.

If the valve stem tip is worn, replace the valve.

11. INSPECT AND CLEAN VALVE SEATS

(a) Using a 45˚ carbide cutter, resurface the valve seats. Remove only enough metal to clean the seats.

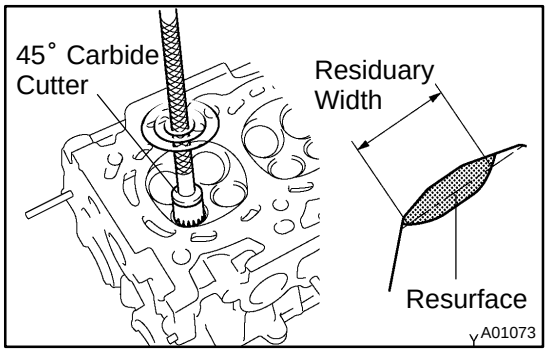

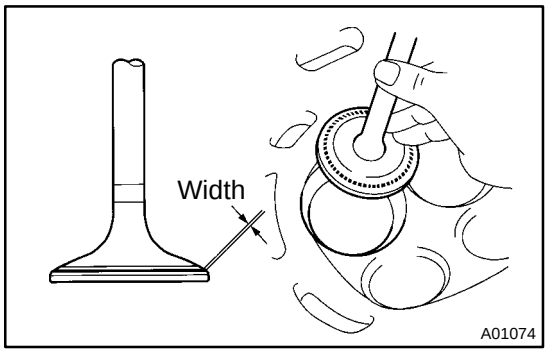

(b) Check the valve seating position.
Apply a light coat of prussian blue (or white lead) to the valve face. Lightly press the valve against the seat. Do not rotate valve.

(c) Check the valve face and seat for the following:

- If blue appears 360˚ around the face, the valve is concentric. If not, replace the valve.
- If blue appears 360˚ around the valve seat, the guide and face are concentric. If not, resurface the seat.
- Check that the seat contact is in the middle of the valve face with the following width:

1.0 - 1.4 mm (0.039 - 0.055 in.)

If not, correct the valve seats as follows:

(1) If the seating is too high on the valve face, use 20˚ and 45˚ cutters to correct the seat.

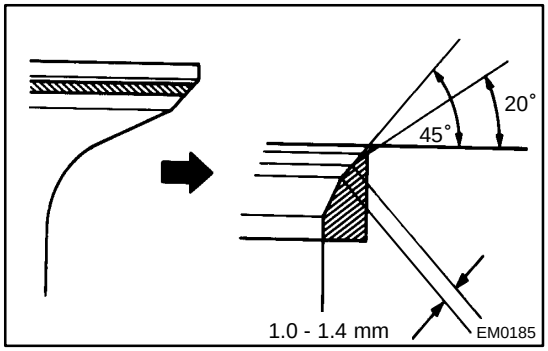

(2) If the seating is too low on the valve face, use 75˚ and 45˚ cutters to correct the seat.

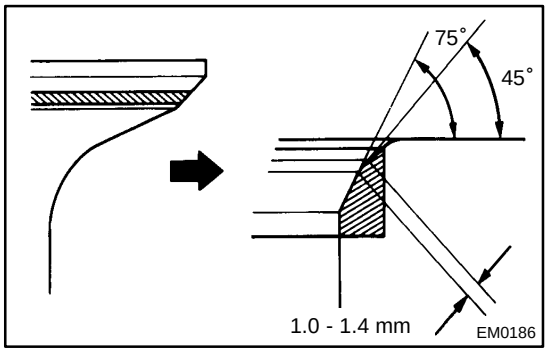

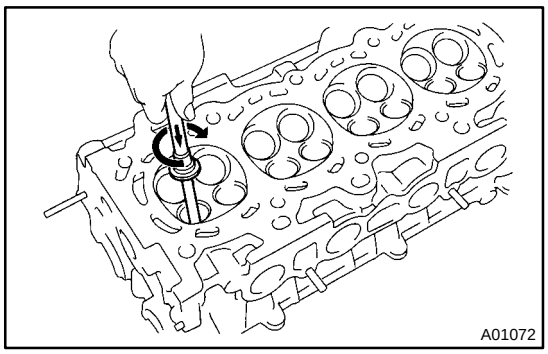

(d) Hand-lap the valve and valve seat with an abrasive compound.
(e) After hand-lapping, clean the valve and valve seat.

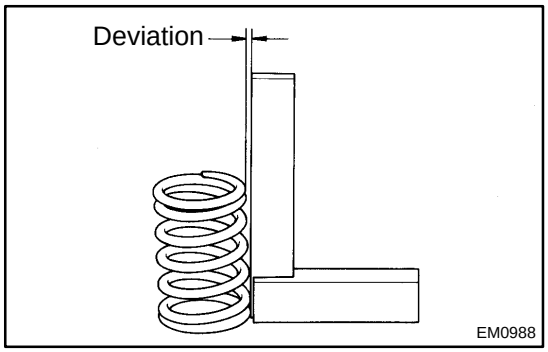

12. INSPECT VALVE SPRINGS

(a) Using a steel square, measure the deviation of the valve spring.
Maximum deviation: 1.6 mm (0.063 in.)
Maximum angle (reference): 2°

If the deviation is greater than maximum, replace the valve spring.

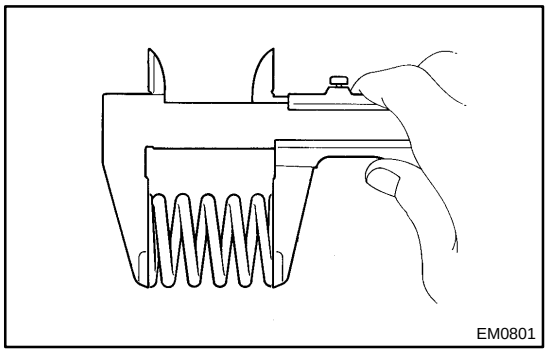

(b) Using vernier calipers, measure the free length of the valve spring.
Free length: 45.1 mm (1.776 in.)

If the free length is not as specified, replace the valve spring.

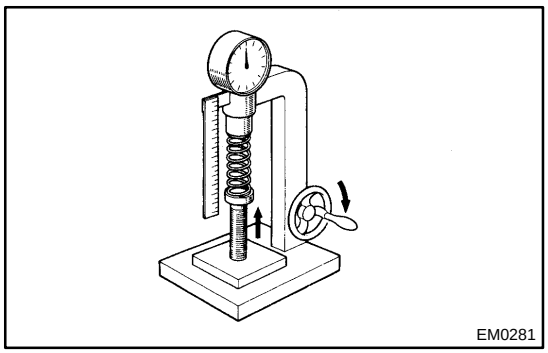

(c) Using a spring tester, measure the tension of the valve spring at the specified installed length.
Installed tension:
149 - 165 N (15.2 - 16.8 kgf, 33.5 - 37.1 lbf)
at 32.5 mm (1.280 in.)
Maximum working tension:
286 - 316 N (29.1 - 32.2 kgf, 64.2 - 71.0 lbf
at 23.9 mm (0.941 in.)

If the installed tension is not as specified, replace the valve spring

13. INSPECT CAMSHAFT FOR RUNOUT

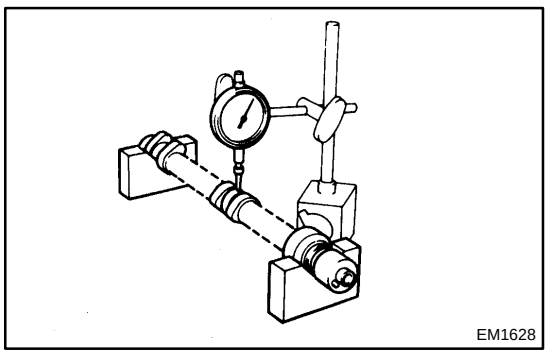

(a) Place the camshaft on V-blocks.
(b) Using a dial indicator, measure the circle runout at the center journal.
Maximum circle runout: 0.03 mm (0.0012 in.)

If the circle runout is greater than maximum, replace the camshaft.

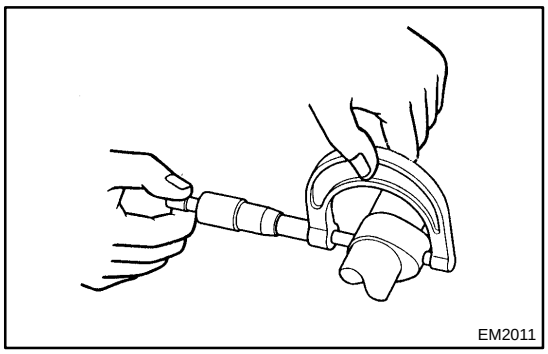
EM2011

14. INSPECT CAM LOBES

Using a micrometer, measure the cam lobe height.

Standard cam lobe height:
Intake 44.617 - 44.717 mm (1.75657 - 1.76051 in.)
Exhaust 44.666 - 44.766 mm (1.75850 - 1.76244 in.)
Minimum cam lobe height:
Intake 44.47 mm (1.7508 in.)
Exhaust 44.52 mm (1.7528 in.)

If the cam lobe height is less than minimum, replace the camshaft.

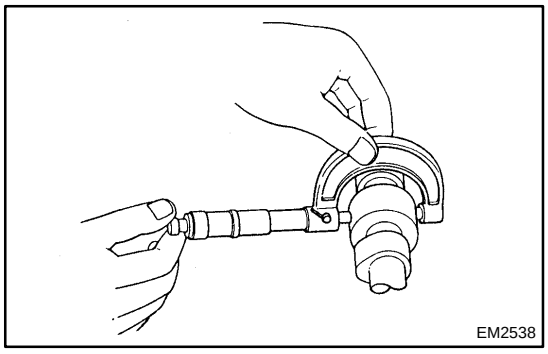
EM2538

15. INSPECT CAMSHAFT JOURNALS

Using a micrometer, measure the journal diameter.

No.1 journal diameter:
34.449 - 34.465 mm (1.35626 - 1.35689 in.)
Others journal diameter:
22.949 - 22.965 mm (0.90350 - 0.90413 in.)

If the journal diameter is not as specified, check the oil clearance.

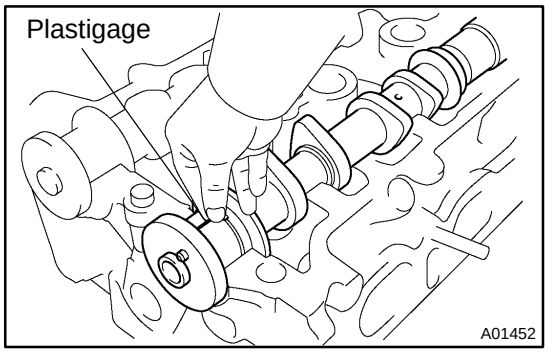

A01452

16. INSPECT CAMSHAFT JOURNAL CLEARANCE

(a) Clean the bearing caps and camshaft journals.
(b) Place the camshafts on the cylinder head.
(c) Lay a strip of Plastigage across each of the camshaft journal.

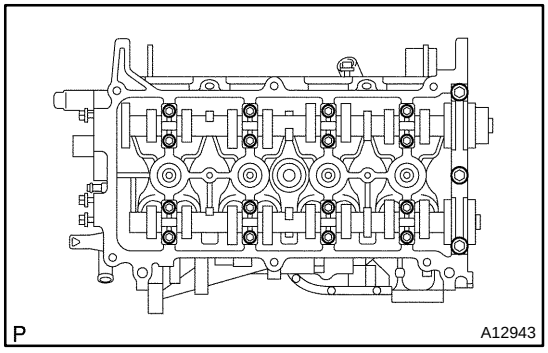

A12943

(d) Install the bearing caps (See page EM-44).

Torque:
No.1 23 N·m (235 kgf·cm, 17 ft·lbf)
No.2 12.7 N·m (130 kgf·cm, 10 ft·lbf)

NOTICE:
Do not turn the camshaft.

(e) Remove the bearing caps.

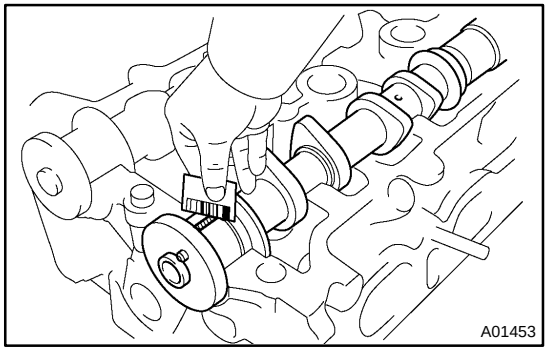
A01453

(f) Measure the plastigage at its widest point.

Standard oil clearance:
0.040 - 0.095 mm (0.00157 - 0.00374 in.)
Maximum oil clearance:
0.115 mm (0.00453 in.)

If the oil clearance is greater than maximum, replace the camshaft. If necessary, replace the bearing caps and cylinder head as a set.

(g) Completely remove the Plastigage.
(h) Remove the camshafts.

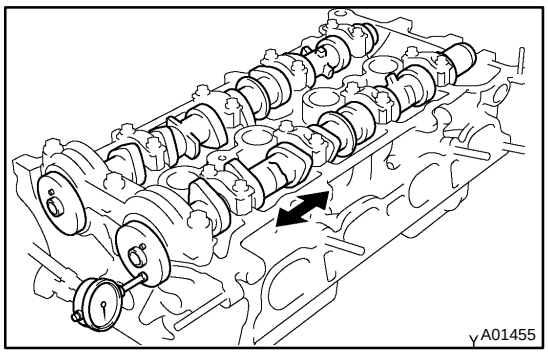

17. INSPECT CAMSHAFT THRUST CLEARANCE

(a) Install the camshafts (See page EM-44).

(b) Using a dial indicator, measure the thrust clearance while moving the camshaft back and forth.

Standard thrust clearance:
0.040 - 0.095 mm (0.0016 - 0.0037 in.)
Maximum thrust clearance:
0.11 mm (0.0043 in.)

If the thrust clearance is greater than maximum, replace the camshaft. If necessary, replace the bearing caps and cylinder head as a set.

(c) Remove the camshafts.

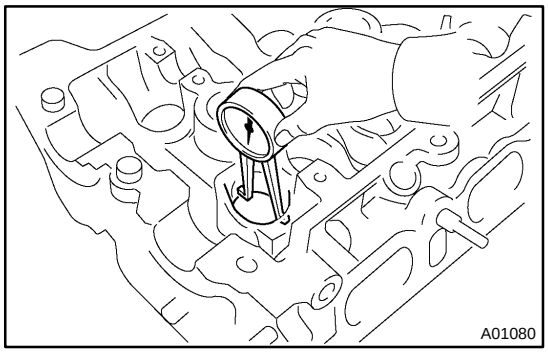

18. INSPECT VALVE LIFTERS AND LIFTER BORES

(a) Using a caliper gauge, measure the lifter bore diameter of the cylinder head.

Lifter bore diameter:
31.000 - 31.025 mm (1.22047 - 1.22145 in.)

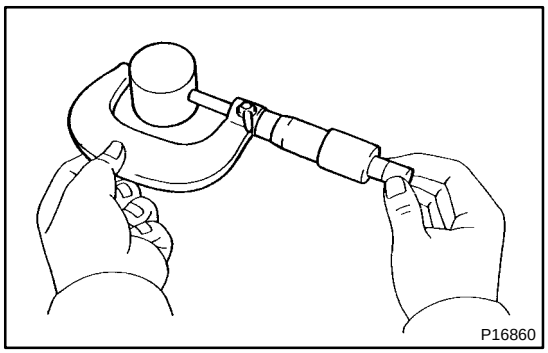

(b) Using a micrometer, measure the lifter diameter.

Lifter diameter:
30.966 - 30.976 mm (1.21913 - 1.21953 in.)

(c) Subtract the lifter diameter measurement from the lifter bore diameter measurement.

Standard oil clearance:
0.024 - 0.059 mm (0.00094 - 0.00232 in.)
Maximum oil clearance:
0.1 mm (0.004 in.)

If the oil clearance is greater than maximum, replace the lifter. If necessary, replace the cylinder head.

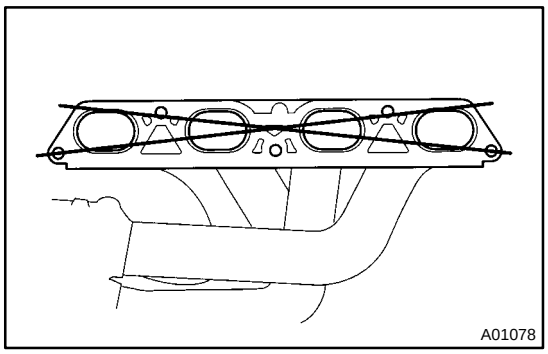

19. INSPECT INTAKE MANIFOLD

Using a precision straight edge and feeler gauge, measure the surface contacting the cylinder head for warpage.

Maximum warpage: 0.10 mm (0.0039 in.)

If warpage is greater than maximum, replace the manifold.

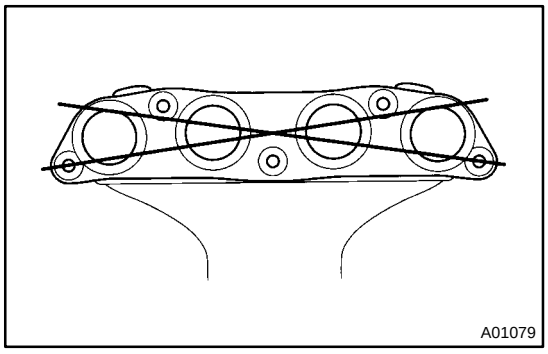

20. INSPECT EXHAUST MANIFOLD

Using a precision straight edge and feeler gauge, measure the surface contacting the cylinder head for warpage.

Maximum warpage: 0.70 mm (0.0276 in.)

If warpage is greater than maximum, replace the manifold.

EM16N-01

INSTALLATION

HINT:

- Thoroughly clean all parts to be assembled.
- Before installing the parts, apply fresh engine oil to all sliding and rotating surfaces.
- Replace all gaskets and oil seals with new ones.

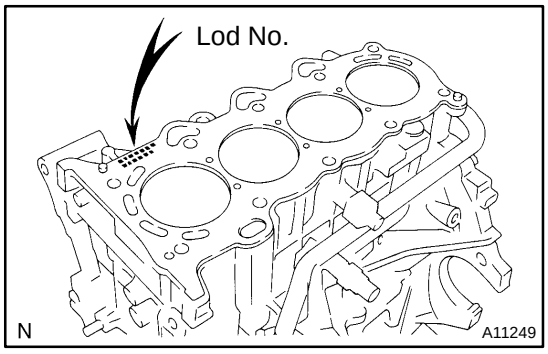

1. PLACE CYLINDER HEAD ON CYLINDER BLOCK

(a) Place a new cylinder head gasket on the cylinder block surface with the Lod No. stamp upward.

NOTICE:

Be careful of the installation direction.

(b) Place the cylinder head quietly in order not to damage the gasket with the bottom part of the head.

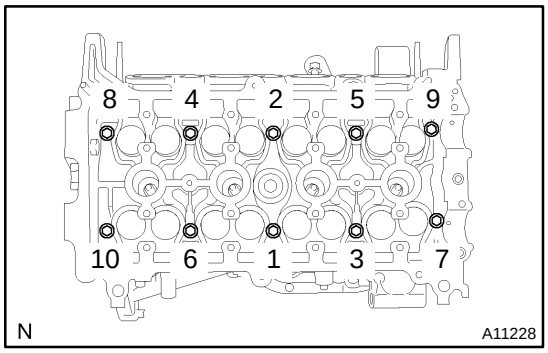

2. INSTALL CYLINDER HEAD BOLTS

HINT:

- The cylinder head bolts are tightened in 2 progressive steps (steps (b) and (d)).
- If any cylinder head bolt is broken or deformed, replace it.

(a) Apply a light coat if engine oil on the threads and under the heads of the cylinder head bolts.

(b) Using a 8 mm bi-hexagon wrench, install and uniformly tighten the 10 cylinder head bolts and plate washers, in several passes, in the sequence shown.

Torque: 29.4 N·m (300 kgf·cm, 22 ft·lbf)

If any one of the cylinder head bolts does not meet the torque specification, replace the cylinder head bolt.

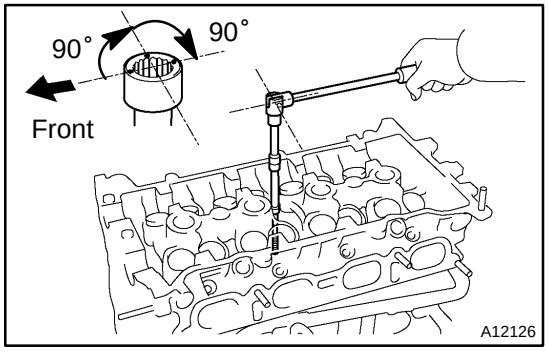

(c) Mark the front of the cylinder head bolt with paint.

(d) Retighten the cylinder head bolts by 90˚ and 90˚ in the numerical order shown.

(e) Check that the paint mark is now at a 180˚ angle to the front.

(f) Install the bolt holding the water bypass pipe to the cylinder head.

Torque: 9.0 N·m (92 kgf·cm, 80 in.·lbf)

(g) Connect the upper radiator hose to the water hose unions.
(h) Connect the heater hose to the water hose unions.

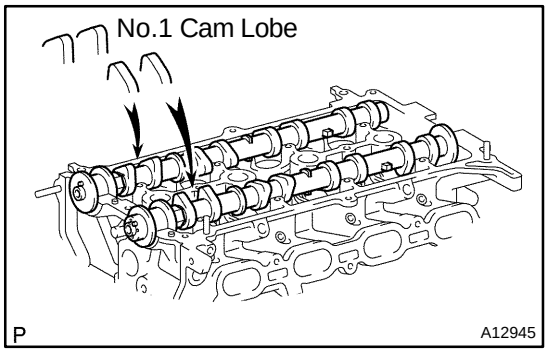

3. INSTALL CAMSHAFTS

(a) Place the 2 camshafts on the cylinder head with the No.1 cam lobes facing as shown the illustration.

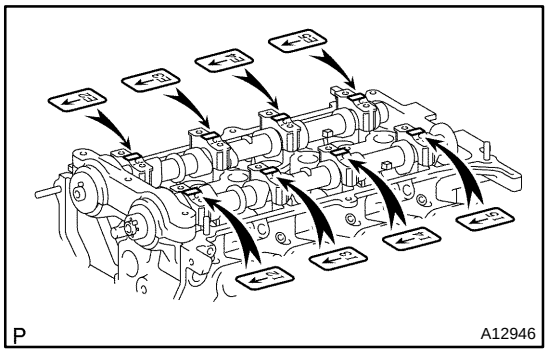

(b) Install the bearing caps in their proper locations.

HINT:

No. 2 camshaft bearing cap has a number and front mark.

(c) Apply a light coat of engine oil on the threads and under the heads of the bearing cap bolts.

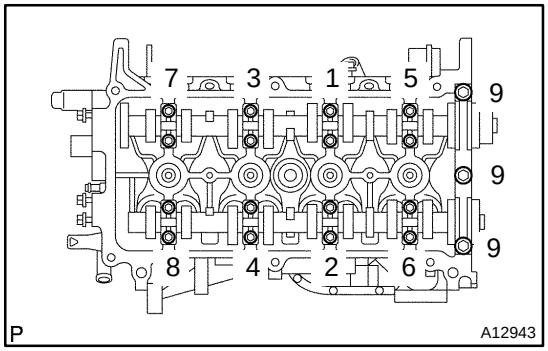

(d) Install and uniformly tighten the 19 bearing cap bolts.
After tightening the No.1 camshaft bearing cap, tighten then in several passes, in the sequence shown.
Torque:
No. 1 23 N·m (235 kgf·cm, 17 ft·lbf)
No. 2 12.7 N·m (130 kgf·cm, 10 ft·lbf)

4. INSTALL VALVE TIMING CONTROLLER ASSEMBLY AND CAMSHAFT TIMING SPROCKET

(a) Apply engine oil in the rage from the tip of the intake camshaft to 16 mm from that tip.
(b) Align the timing mark on the value timing controller assembly with the knock pin, and install the value timing controller assembly to the camshaft.

NOTICE:

Do not push valve timing controller assembly to the camshaft forcibly when installing it.

(c) Align the knock pin hole in the camshaft timing sprocket with the knock pin of the camshaft, and install the sprocket to the camshaft.
(d) Temporarily install the timing sprocket bolt.

(e) Hold the hexagon head portion of the camshaft with a wrench, and install the bolt.
Torque: 64 N·m (650 kgf·cm, 47 ft·lbf)

5. **CHECK AND ADJUST VALVE CLEARANCE (See page EM-5)**
6. **INSTALL CYLINDER HEAD COVER (See page EM-20)**
7. **INSTALL CAMSHAFT TIMING SPROCKETS (See page EM-20)**
8. **INSTALL OIL FILTER CAP**
9. **INSTALL PCV VALVE**
10. **INSTALL ECT SENSOR (See page SF-54)**
11. **INSTALL CAMSHAFT POSITION SENSOR (See page IG-10)**
12. **INSTALL TIMING CHAIN COVER (See page EM-20)**

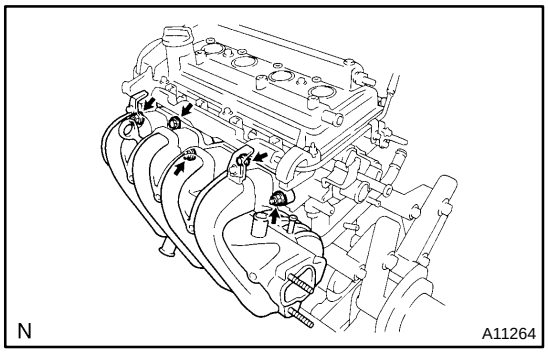

13. **INSTALL INTAKE MANIFOLD**

(a) Install a new gasket, the intake manifold and 2 brackets with the 2 bolts and 2 nuts. Uniformly tighten the bolts and nuts in several passes.
Torque: 30 N·m (300 kgf·cm, 22 ft·lbf)

(b) Connect the EVAP hose for ORVR.

(c) Connect the brake booster vacuum hose.

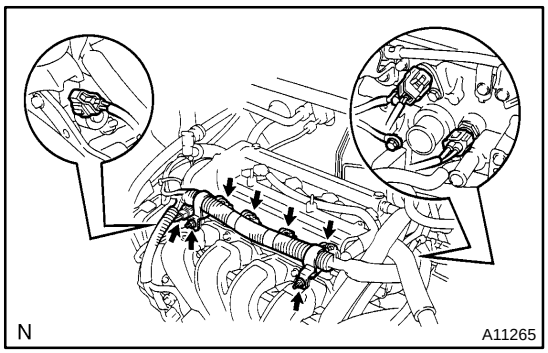

14. **CONNECT ENGINE WIRE TO CYLINDER HEAD**

(a) Install the engine wire protector to the 2 brackets on the intake manifold with the 2 bolts.

(b) Connect the ECT sensor connector.

(c) Connect the camshaft position sensor connector.

(d) Connect the oil control valve connector.

(e) Connect the 4 injector connectors.

(f) Connect the 2 ground wire.

15. **INSTALL THROTTLE BODY (See page SF-36)**
16. **INSTALL PCV HOSES**
17. **INSTALL SPARK PLUGS (See page IG-1)**
18. **INSTALL IGNITION COILS (See page IG-7)**

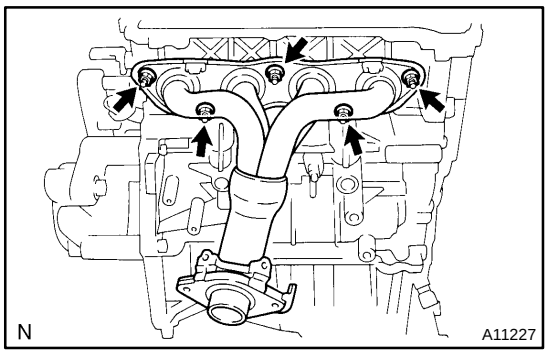

19. INSTALL EXHAUST MANIFOLD

(a) Install a new gasket and the exhaust manifold with the 3 bolts 2 nuts. Uniformly tighten the nuts in several passes.
Torque: 27 N·m (275 kgf·cm, 20 ft·lbf)

(b) Install the upper heat insulator with the 4 bolts.
Torque: 8.0 N·m (82 kgf·cm, 71 in.·lbf)

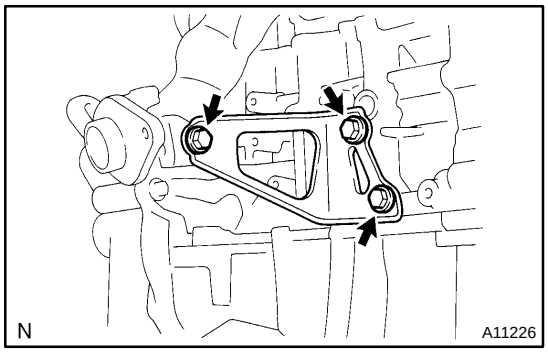

20. INSTALL EXHAUST MANIFOLD STAY

Install the manifold stay with the 3 bolts. Alternately tighten the bolts.
Torque: 37 N·m (377 kgf·cm, 27 ft·lbf)

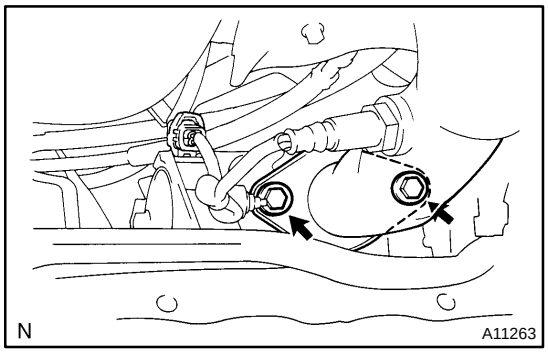

21. CONNECT FRONT EXHAUST PIPE TO EXHAUST MANIFOLD

(a) Place a new gasket to the exhaust manifold.

(b) Install the 2 bolts and 2 springs holding the front exhaust pipe to the exhaust manifold.
Torque: 62 N·m (630 kgf·cm, 46 ft·lbf)

22. CONNECT ACCELERATOR CABLE

23. INSTALL AIR CLEANER ASSEMBLY

24. INSTALL GENERATOR AND DRIVE BELT
(See page CH-17)

25. INSTALL WATER FILLER

Install the water filler with the 2 bolts.
Torque: 7.5 N·m (76 kgf·cm, 66 in.·lbf)

26. FILL WITH ENGINE COOLANT

27. START ENGINE AND CHECK FOR LEAKS

28. RECHECK ENGINE COOLANT LEVEL AND OIL LEVEL

EM16M-01

REASSEMBLY

HINT:

- Thoroughly clean all parts to be assembled.
- Before installing the parts, apply fresh engine oil to all sliding and rotating surfaces.
- Replace oil seals with new ones.

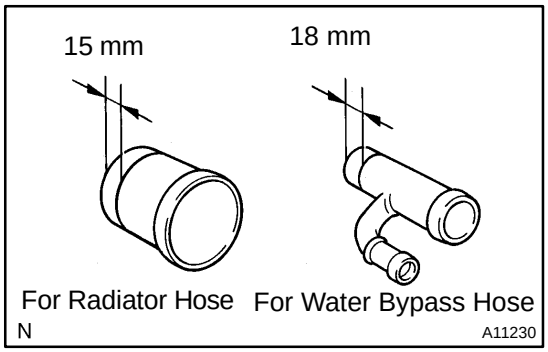

1. INSTALL WATER HOSE UNIONS

HINT:

When using a new cylinder head, water hose unions must be installed.

(a) Mark the standard position away from the edge, onto the water hose union.

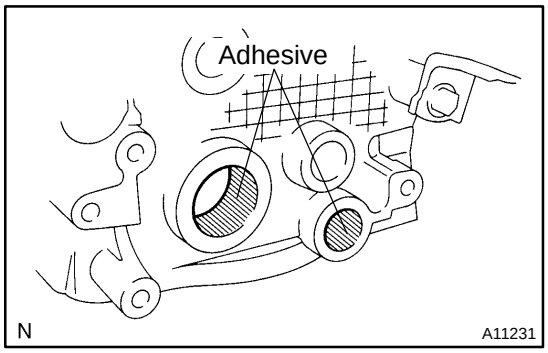

(b) Apply adhesive to the water hose union hole of the cylinder head.

Adhesive:
Part No.08833-00070, THREE BOND 1324 or equivalent

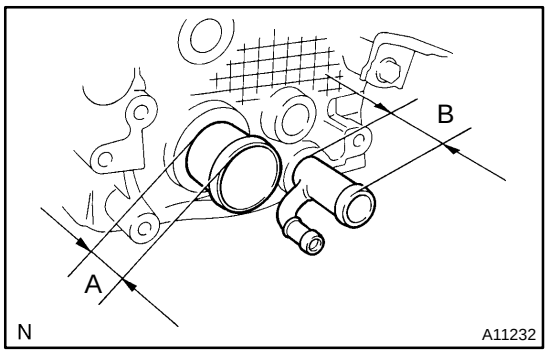

(c) Using a press, press in a new water hose union until there is protruding from the cylinder head.

Standard protrusion:
A 29 mm (1.14 in.)
B 44 mm (1.73 in.)

NOTICE:

Avoid pressing a new water hose union in too far by measuring the amount of protrusion while pressing.

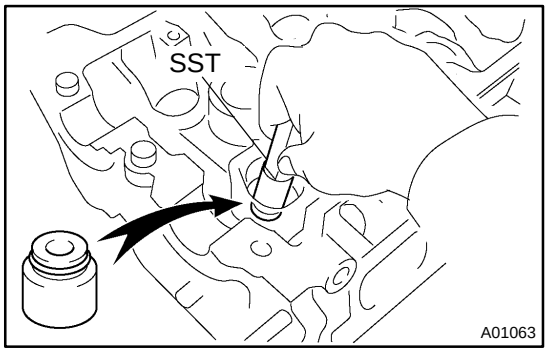

2. INSTALL VALVES

(a) Using SST, push in a new oil seal.
SST 09201-41020

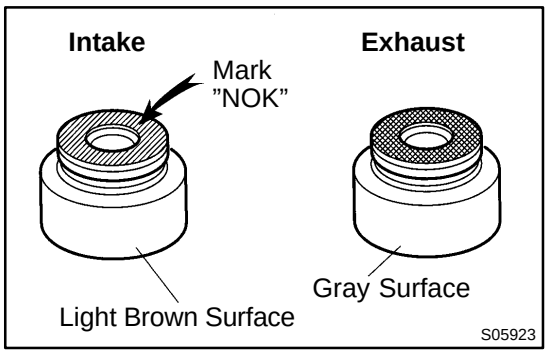

HINT:
The intake valve oil seal is light brown and the exhaust valve oil seal is gray.

NOTICE:

Pay much attention assembling the oil seal for intake and exhaust. Assembling the wrong one may cause a failure.

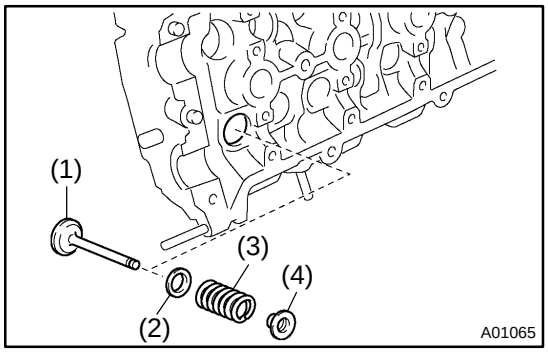

(b) Install the valve (1), spring (2), valve spring (3), and spring retainer (4).

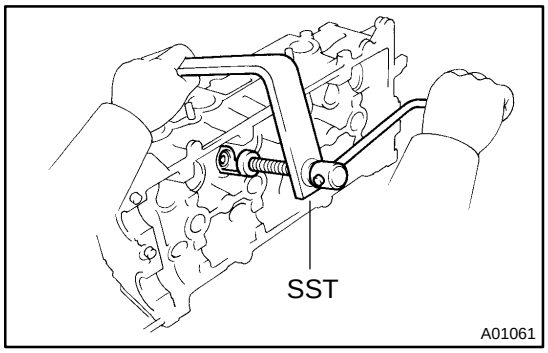

(c) Using SST, compress the valve spring and place the 2 keepers around the valve stem.
SST 09202-70020 (09202-00010)

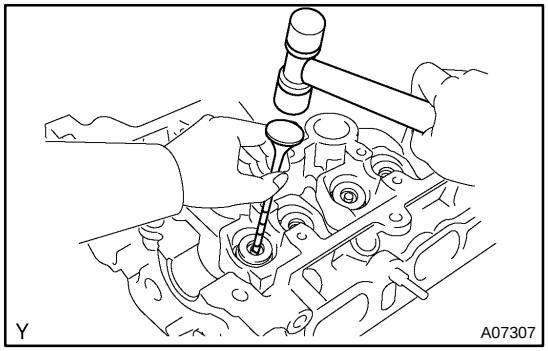

(d) Using a plastic-faced hammer and the valve stem (not in use) tip wound with vinyl tape, lightly tap the valve stem tip to ensure a proper fit.

NOTICE:

Be careful not to damage the valve stem tip.

3. INSTALL VALVE LIFTERS

(a) Install the valve lifter.

(b) Check that the valve lifter rotates smoothly by hand.

EM16I-01

REMOVAL

1. DRAIN ENGINE COOLANT

2. REMOVE WATER FILLER

(a) Disconnect the No. 3 radiator hose.

(b) Remove the 2 bolts and water filler.

3. REMOVE OUTER FRONT COWL TOP PANEL (See page BO-31)

4. REMOVE DRIVE BELT AND ALTERNATOR (See page CH-7)

5. REMOVE AIR CLEANER ASSEMBLY

6. DISCONNECT ACCELERATOR CABLE

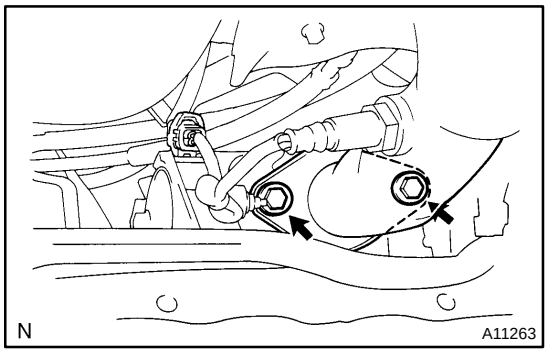

7. DISCONNECT CENTER EXHAUST PIPE FROM EXHAUST MANIFOLD

(a) Remove the 2 bolts and 2 springs holding the front exhaust pipe to the exhaust manifold.

(b) Remove the gasket.

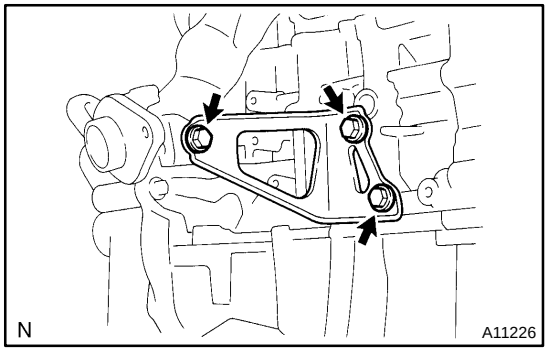

8. REMOVE EXHAUST MANIFOLD STAY

Remove the 3 bolts and exhaust manifold stay.

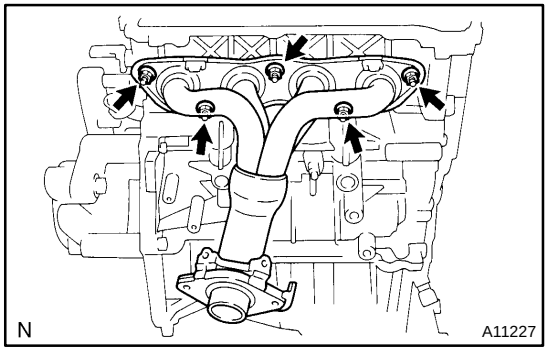

9. REMOVE EXHAUST MANIFOLD

(a) Remove the 4 bolts and upper heat insulator.

(b) Remove the 3 bolts 2 nuts, exhaust manifold and gasket.

10. REMOVE IGNITION COIL (See page IG-5)

11. REMOVE SPARK PLUGS (See page IG-1)

12. REMOVE PCV HOSES

13. REMOVE THROTTLE BODY (See page SF-34)

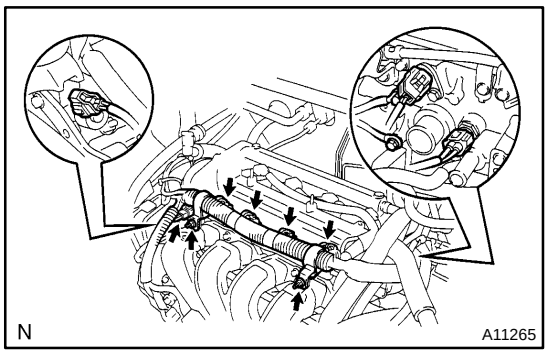

14. DISCONNECT ENGINE WIRE FROM CYLINDER HEAD

(a) Disconnect the ECT sensor connector
(b) Disconnect the camshaft position sensor connector
(c) Disconnect the oil control valve connector.
(d) Disconnect the 4 injector connectors.
(e) Disconnect the 2 ground wires
(f) Remove the 2 nuts, and disconnect the engine wire protector from the 2 brackets on the intake manifold.

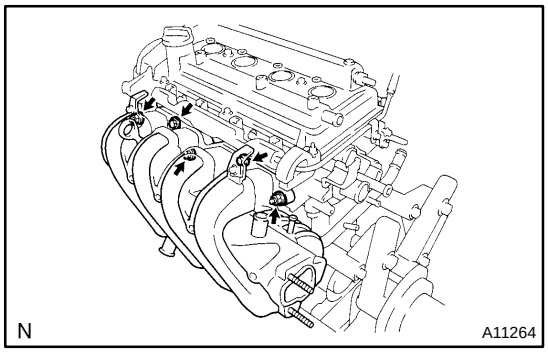

15. REMOVE INTAKE MANIFOLD

(a) Disconnect the EVAP hose for ORVR
(b) Disconnect the brake booster vacuum hose
(c) Remove the 3 bolts, 2 nuts, intake manifold and gasket.

16. REMOVE CAMSHAFT POSITION SENSOR

17. REMOVE ECT SENSOR

18. REMOVE OIL CONTROL VALVE

19. REMOVE PCV VALVE

20. REMOVE OIL FILLER CAP

21. REMOVE HEAD COVER (See page EM-15)

22. REMOVE INJECTOR (See page SF-20)

23. REMOVE TIMING CHAIN COVER (See page EM-15)

24. REMOVE CAMSHAFT TIMING SPROCKET AND VALVE TIMING CONTROL ASSEMBLY

Hold the hexagonal head portion of the camshaft with a wrench, and remove the 2 bolts and timing sprocket and valve timing controller assembly.

NOTICE:

- **Be careful not to damage the cylinder head and valve lifter with the wrench.**
- **Do not disassembly the valve timing controller assembly.**

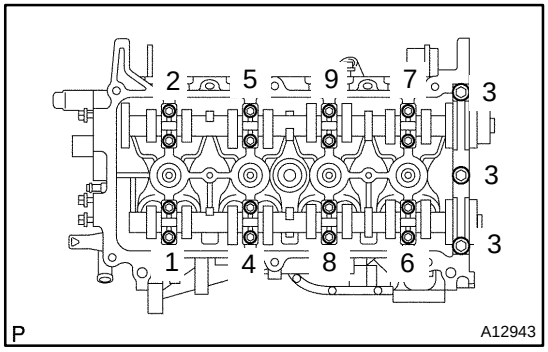

25. REMOVE CAMSHAFTS

Uniformly loosen and remove the 19 bearing cap bolts, in several passes, in the sequence shown, and remove the 9 bearing caps, intake and exhaust camshafts.

26. REMOVE CYLINDER HEAD

(a) Disconnect the upper radiator hose from the water hose union
(b) Disconnect the heater water hose from the water hose union

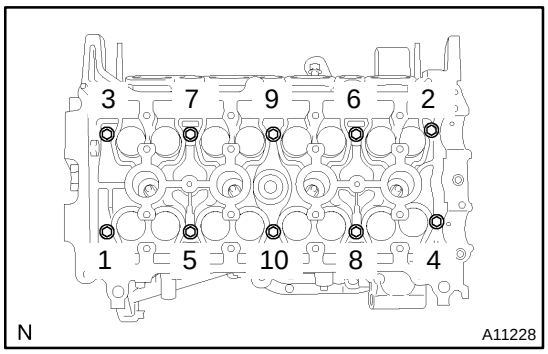

(c) Using a 8 mm bi-hexagon wrench, uniformly loosen and remove the 10 cylinder head bolts, in several passes, in the sequence shown. Remove the 10 cylinder head bolts and plate washers.

NOTICE:

Head warpage or cracking could result from removing bolts in an incorrect order.

(d) Remove the bolt holding the water bypass pipe to the cylinder head.

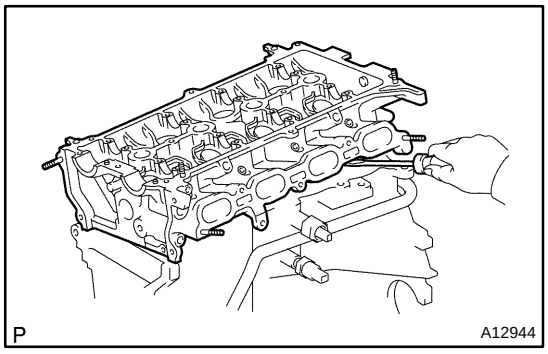

(e) Lift the cylinder head from the dowels on the cylinder block and replace the cylinder head on wooden blocks on a bench.

HINT:

If the cylinder head is difficult to lift of, pry between the cylinder head and cylinder block with a screwdriver.

NOTICE:

Be careful not to damage the contact surfaces of the cylinder head and cylinder block.

EM16L-01

REPLACEMENT

REPLACE VALVE GUIDE BUSHINGS

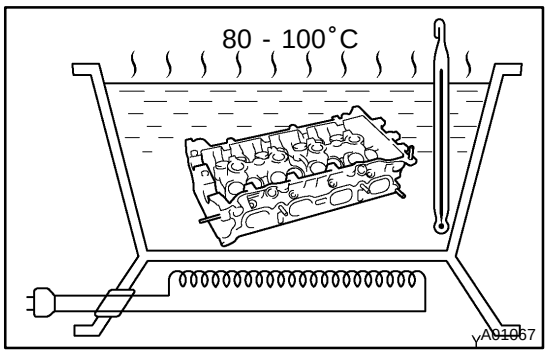

(a) Gradually heat the cylinder head to 80 - 100˚C (176 - 212˚F).

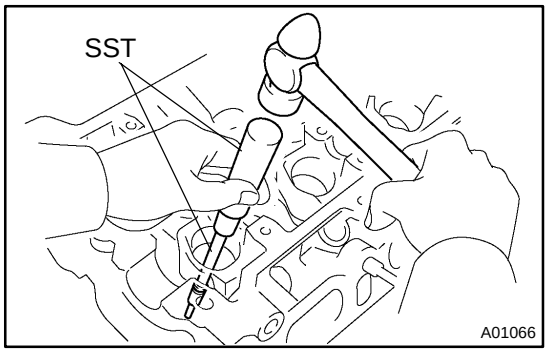

(b) Using SST and a hammer, tap out the guide bushing.
SST 09201-01055, 09950-70010 (09951-07100)

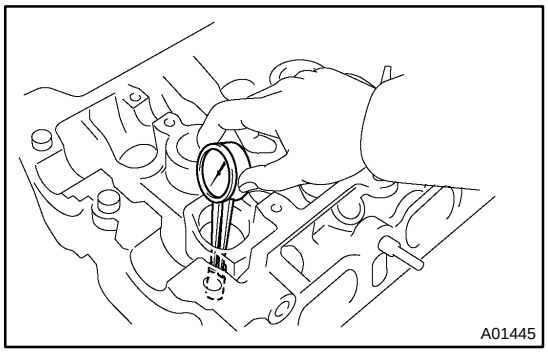

(c) Using a caliper gauge, measure the bushing bore diameter of the cylinder head.

Both intake and exhaust

Bushing bore diameter mm (in.)	Bushing size
9.685 - 9.706 (0.38130 - 0.38213)	Use STD
9.735 - 9.756 (0.38327 - 0.38493)	Use O/S 0.05

(d) Select the new guide bushing (STD or O/S 0.05).

If the bushing bore diameter of the cylinder head is greater than 9.706 mm (0.38213 in.), machine the bushing bore to the following dimension:

9.735 - 9.756 mm (0.38327 - 0.38493 in.)

If the bushing bore diameter of the cylinder head is greater than 9.756 mm (0.38493 in.), replace the cylinder head.

(e) Gradually heat the cylinder head to 80 - 100˚C (176 - 212˚F).

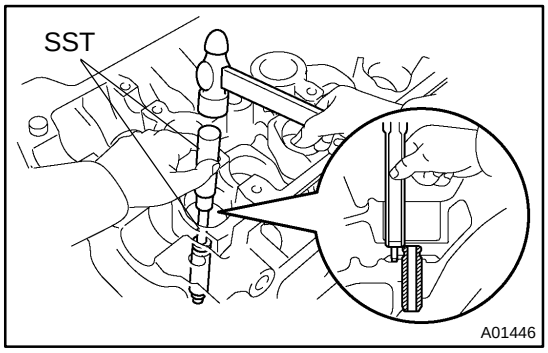

(f) Using SST and a hammer, tap in a new guide bushing to the specified protrusion height.
SST 09201-01055, 09950-70010 (09951-07100)
Protrusion height:
9.0 - 9.4 mm (0.354 - 0.370 in.)

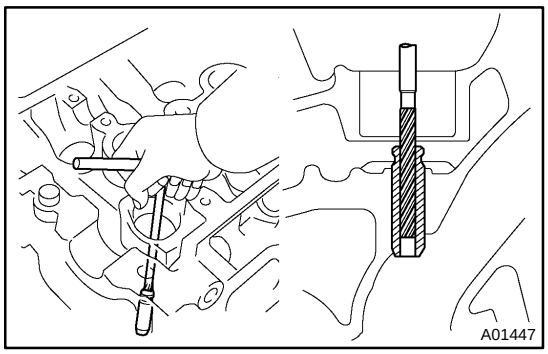

(g) Using a sharp 5 mm reamer, ream the guide bushing to obtain the standard specified clearance (See page EM-32) between the guide bushing and valve stem.

ENGINE UNIT

COMPONENTS

EM178-01

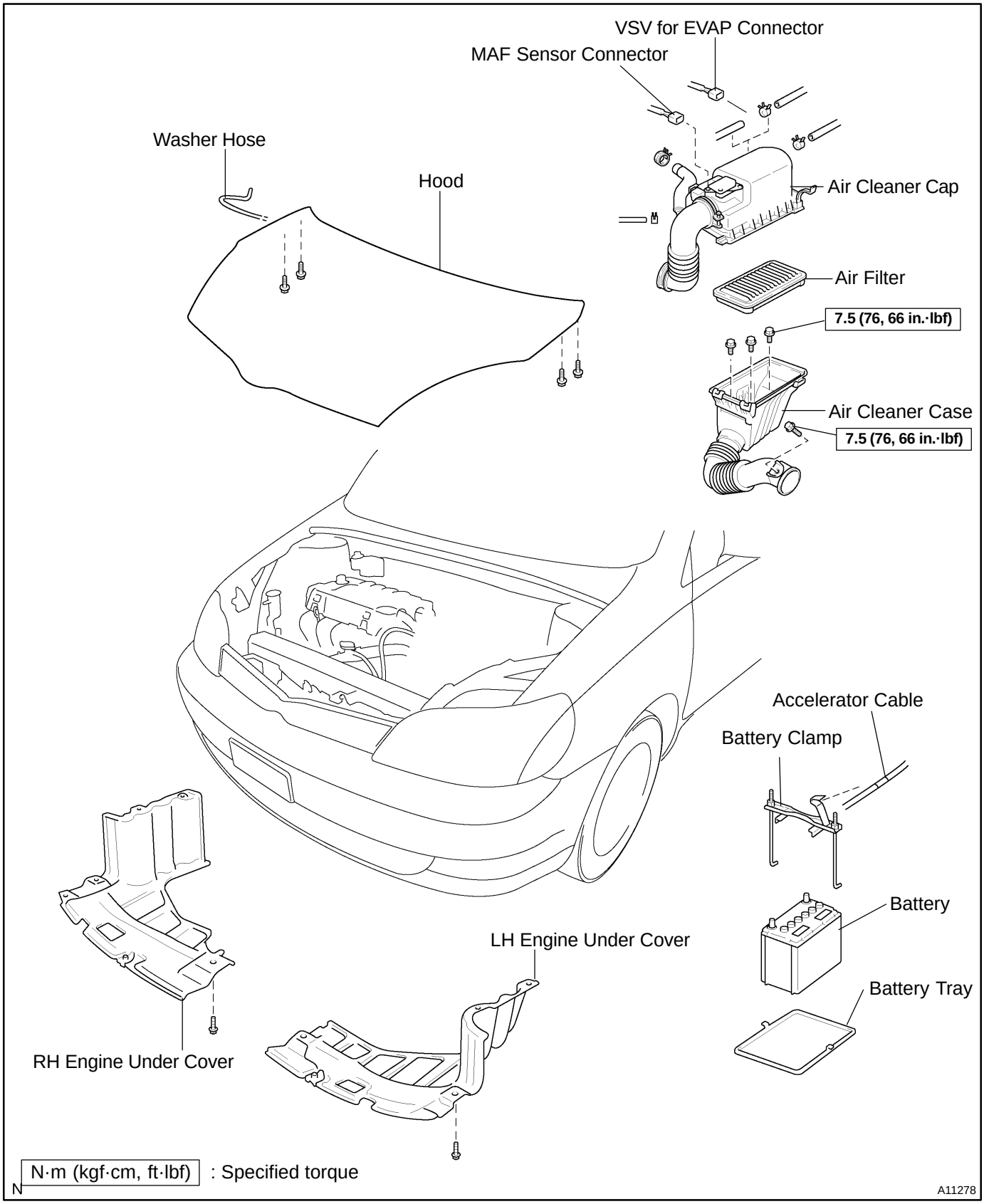

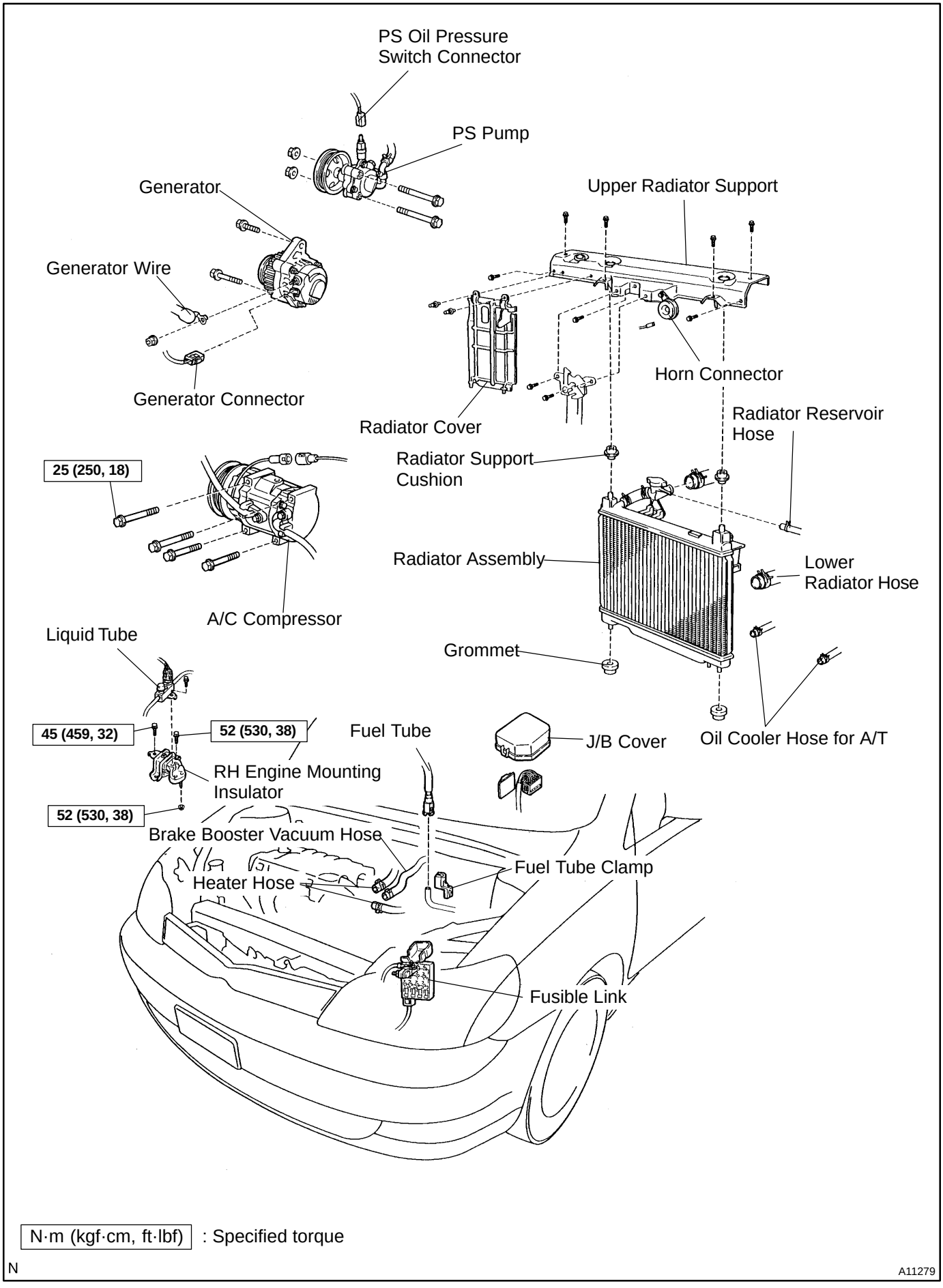
PS Oil Pressure Switch Connector
PS Pump
Generator
Generator Wire
Generator Connector
Upper Radiator Support
Horn Connector
Radiator Cover
Radiator Reservoir Hose
Radiator Support Cushion
25 (250, 18)
A/C Compressor
Radiator Assembly
Lower Radiator Hose
Liquid Tube
Grommet
45 (459, 32)
52 (530, 38)
Fuel Tube
J/B Cover
Oil Cooler Hose for A/T
RH Engine Mounting Insulator
52 (530, 38)
Brake Booster Vacuum Hose
Fuel Tube Clamp
Heater Hose
Fusible Link
N·m (kgf·cm, ft·lbf) : Specified torque
N
A11279

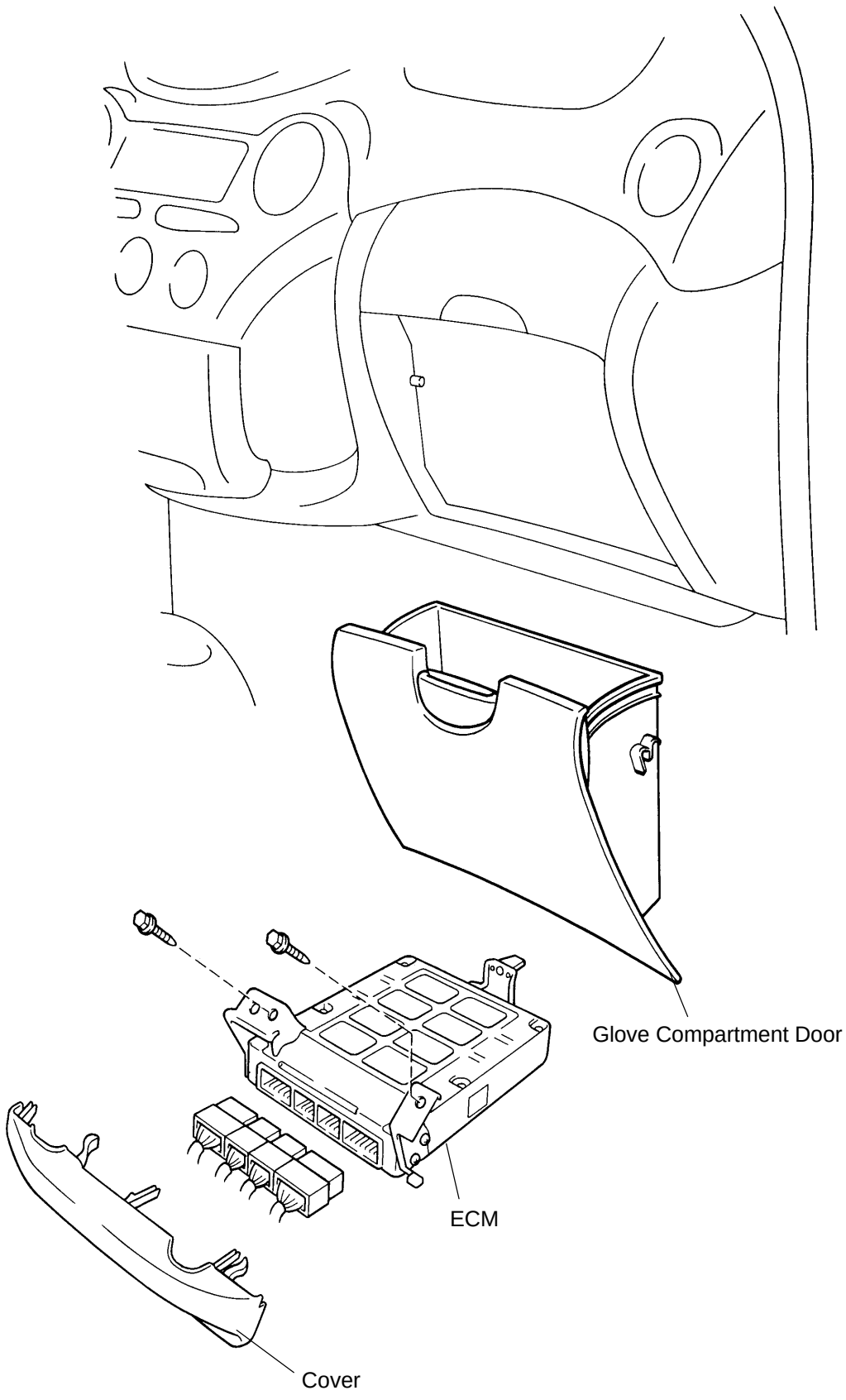

N

B07685

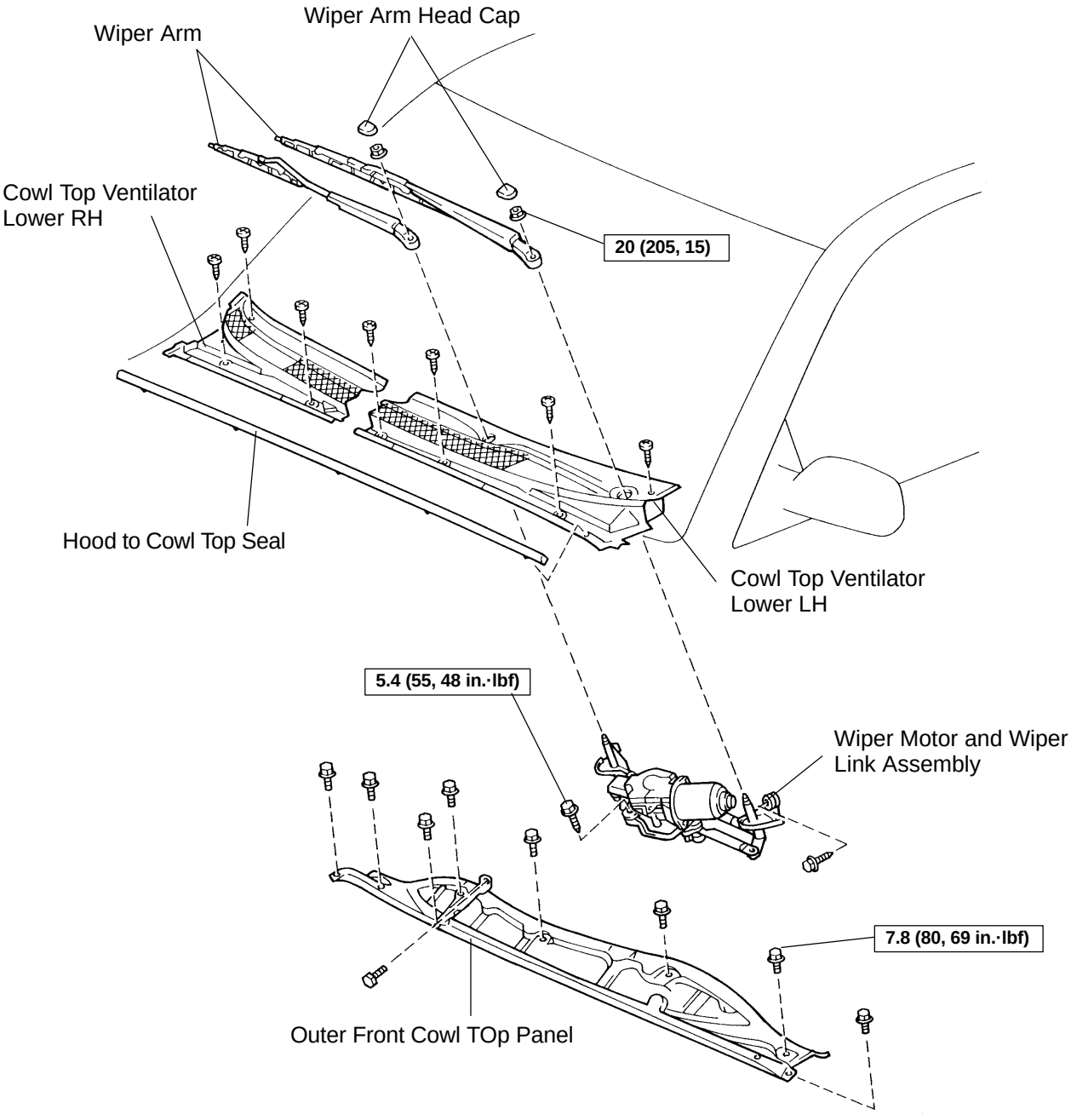

N

N·m (kgf·cm, ft·lbf) : Specified torque

A11283

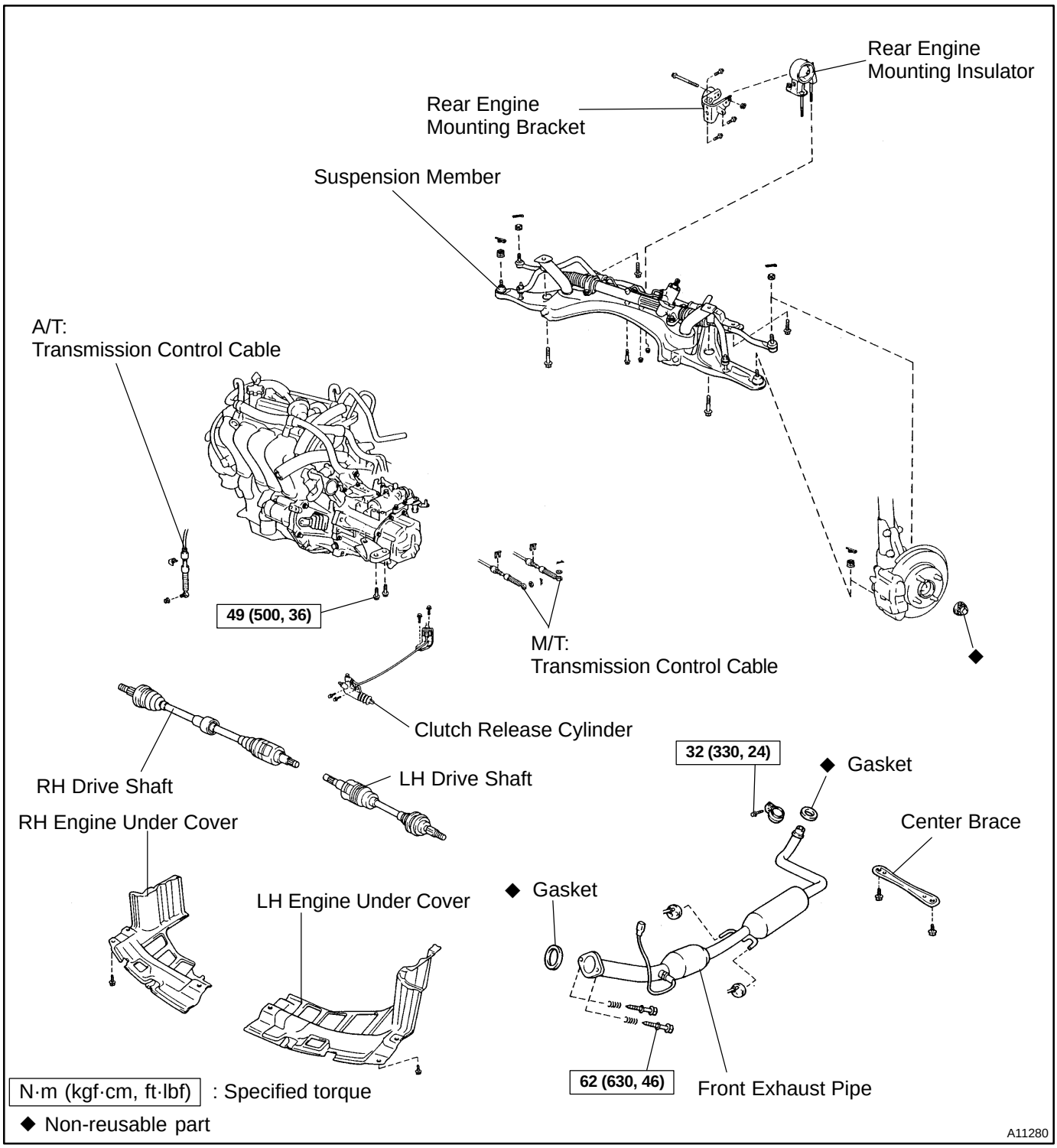
Rear Engine
Mounting Insulator
Rear Engine
Mounting Bracket
Suspension Member
A/T:
Transmission Control Cable
49 (500, 36)
M/T:
Transmission Control Cable
Clutch Release Cylinder
RH Drive Shaft
LH Drive Shaft
RH Engine Under Cover
LH Engine Under Cover
32 (330, 24)
◆ Gasket
Center Brace
◆ Gasket
62 (630, 46)
Front Exhaust Pipe
N·m (kgf·cm, ft·lbf) : Specified torque
◆ Non-reusable part
A11280

INSTALLATION

1. ASSEMBLY ENGINE AND TRANSAXLE
(M/T: See page MX-8)
(A/T: See page AX-33)

2. INSTALL ENGINE AND TRANSAXLE ASSEMBLY IN VEHICLE EM17A-01

(a) Attach the engine sling device to the engine hangers.

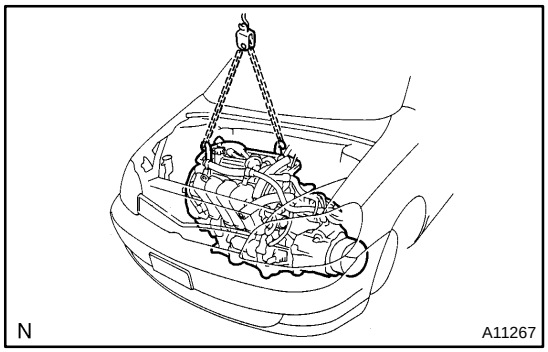

(b) Slowly lower the vehicle, and raise the engine into the engine compartment.

(c) Keep the engine level, and align RH and LH mountings with the body bracket.

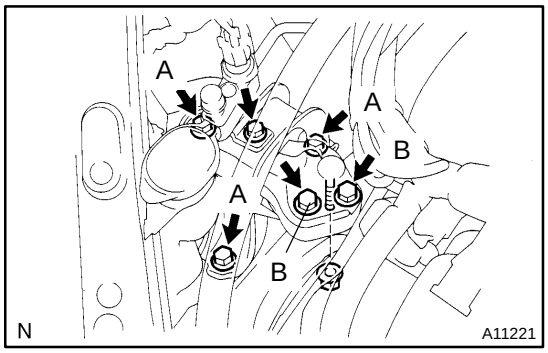

(d) Install the RH engine mounting insulator with the 5 bolts and nut.
Torque:
Bolt A 45 N·m (459 kgf·cm, 33 ft·lbf)
Bolt B and nut 52 N·m (530 kgf·cm, 38 ft·lbf)

(e) Install the liquid tube with the bolt.

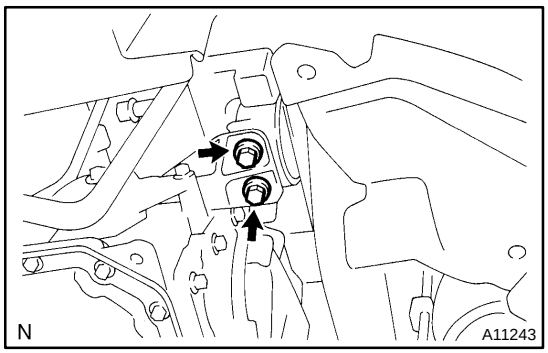

(f) Connect the LH engine mounting, and install the 2 bolts.
Torque: 49 N·m (500 kgf·cm, 36 ft·lbf)

3. INSTALL REAR ENGINE MOUNTING

(a) Install the rear engine mounting bracket with the 3 bolts.
Torque: 49 N·m (500 kgf·cm, 36 ft·lbf)

(b) Temporarily install the rear engine mounting insulator with the through bolt and lock nut.

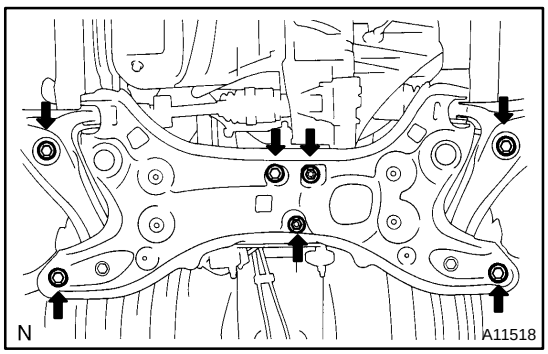

4. INSTALL SUSPENSION MEMBER
(Manual steering: See page SR-43)
(Power steering: See page SR-61)

5. INSTALL DRIVE SHAFT (See page SA-24)

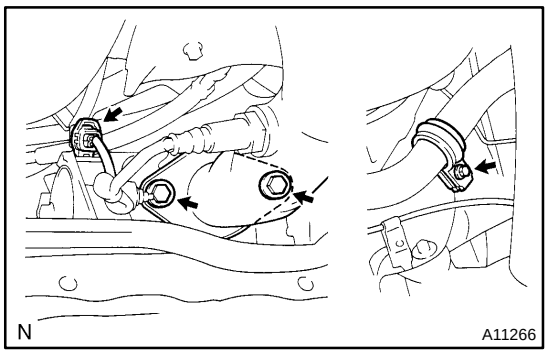

6. INSTALL CENTER EXHAUST PIPE

(a) Install new 2 gaskets and center exhaust pipe with the 2 springs, pipe clamp and 3 bolts.

Torque:
Bolt A 62 N·m (630 kgf·cm, 46 ft·lbf)
Bolt B 32 N·m (330 kgf·cm, 24 ft·lbf)

(b) Install the floor brace with the 2 bolts.

(c) Connect the connector for front heated oxygen sensor.

(d) Install the rear heated oxygen sensor.

7. CONNECT PS PUMP TO ENGINE (See page SR-32)

8. CONNECT ENGINE WIRE TO CABIN

(a) Push in the engine wire to the cabin.

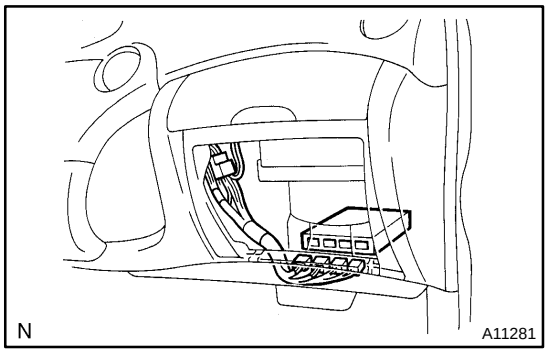

(b) Connect the 2 cowl wire connectors to the connectors on the bracket.

(c) Connect the 4 ECM connectors.

(d) Install the lower panel (See page BO-84).

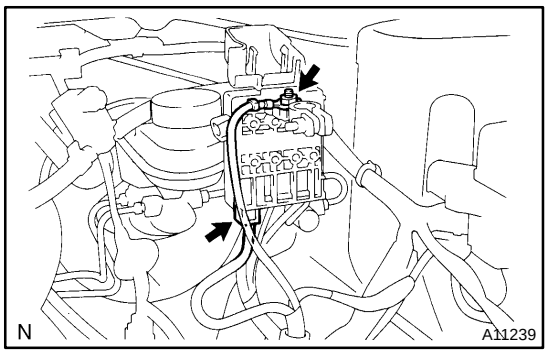

9. CONNECT ENGINE WIRE TO ENGINE COMPARTMENT

(a) Connect the positive cable to the positive terminal.

(b) Connect the connector to the fusible link.

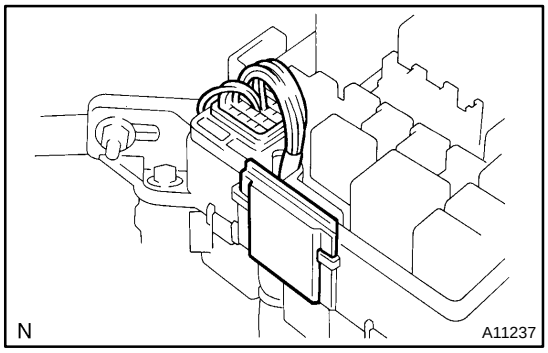

(c) Connect the cable clamp to the relay box.

(d) Connect the connector to the relay box.

10. CONNECT TRANSAXLE CONTROL CABLE(S) TO TRANSAXLE

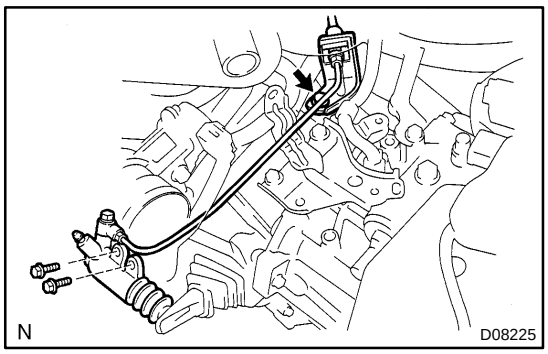

11. M/T:
CONNECT CLUTCH RELEASE CYLINDER TO TRANSAXLE

(a) Connect the clutch release cylinder with the 2 bolts.
Torque: 12 N·m (120 kgf·cm, 9 ft·lbf)

(b) Connect the bracket to the transaxle with the bolt.
Torque: 4.9 N·m (50 kgf·cm, 43 in.·lbf)

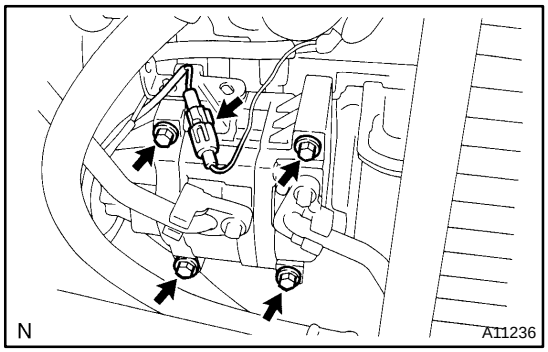

12. w/ A/C:
CONNECT A/C COMPRESSOR TO ENGINE

(a) Connect the A/C compressor to the engine with the 4 bolts.
Torque: 25 N·m (250 kgf·cm, 18 ft·lbf)

(b) Connect the A/C compressor connector.

13. INSTALL RADIATOR ASSEMBLY (See page CO-23)

14. INSTALL GENERATOR AND DRIVE BELT (See page CH-7)

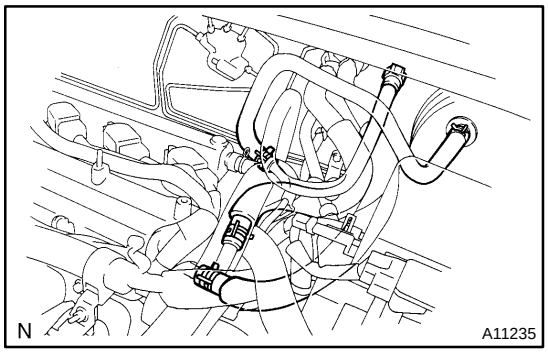

15. CONNECT TUBE, HOSE AND CONNECTOR

(a) Connect the heater hose to the water hose union on the cylinder head.

(b) Connect the brake booster vacuum hose.

(c) Connect the heater hose to the water bypass pipe.

(d) Connect the fuel tube to the fuel pipe on vehicle side.

(e) Install the fuel pipe clamp.

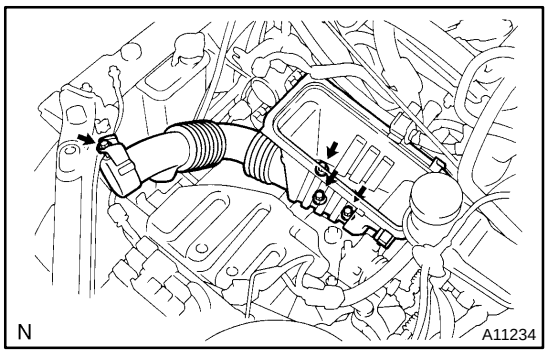

16. INSTALL AIR CLEANER CASE

(a) Install the air cleaner case and air cleaner inlet assembly with the 4 bolts.
Torque: 7.5 N·m (76 kgf·cm, 66 in.·lbf)

(b) Install the air filter.

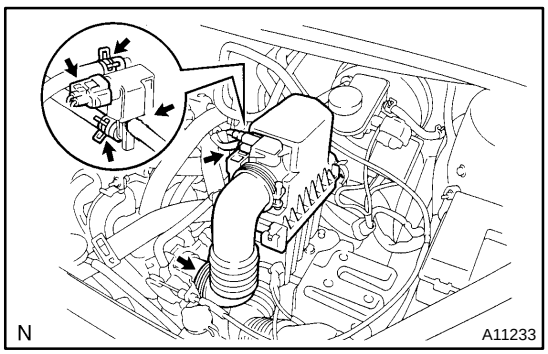

17. INSTALL AIR CLEANER CAP

(a) Connect the air cleaner hose to the throttle body with the hose clamp.

(b) Install the air cleaner cap to the air cleaner case.

(c) Connect the 2 clamps.

(d) Connect the 2 hose to the VSV for EVAP.

(e) Connect the PCV hose to the cylinder head.

(f) Connect the MAF sensor connector.

18. CONNECT ACCELERATOR CABLE

19. **INSTALL OUTER FRONT COWL TOP PANEL (See page BO-35)**
20. **INSTALL ENGINE UNDER COVERS**
21. **INSTALL HOOD**
22. **INSTALL BATTERY AND TRAY**
23. **FILL WITH ENGINE COOLANT**
24. **FILL WITH ENGINE OIL**
25. **FILL WITH TRANSAXLE OIL**
26. **START ENGINE AND CHECK FOR LEAKS**
27. **RECHECK ENGINE COOLANT AND OIL LEVELS**

EM179-01

REMOVAL

1. **REMOVE BATTERY AND TRAY**
2. **REMOVE HOOD**
3. **REMOVE OUTER FRONT COWL TOP PANEL (See page BO-32)**
4. **REMOVE ENGINE UNDER COVERS**
5. **DRAIN ENGINE COOLANT**
6. **DRAIN ENGINE OIL**
7. **DRAIN TRANSAXLE OIL**
8. **DISCONNECT ACCELERATOR CABLE**

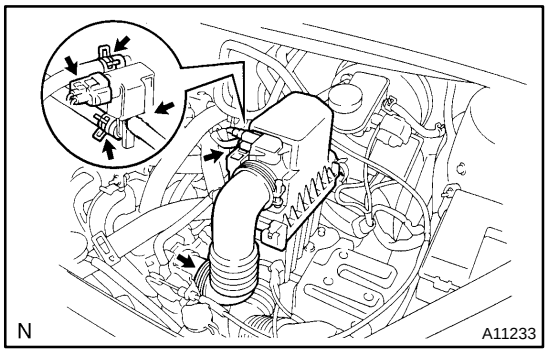

9. **REMOVE AIR CLEANER CAP**

(a) Disconnect the MAF sensor connector.
(b) Disconnect the PCV hose from the cylinder head.
(c) Disconnect the 2 hose from the VSV for EVAP.
(d) Disconnect the 2 clamps, and disconnect the air cleaner cap from the air cleaner case.
(e) Loosen the hose clamp, and disconnect the air cleaner hose from the throttle body.
(f) Remove the air cleaner cap and air cleaner hose assembly.

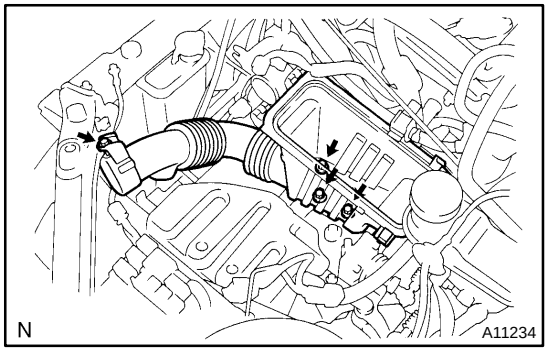

10. **REMOVE AIR CLEANER CASE**

(a) Remove the air filter.
(b) Remove the 4 bolts and air cleaner case and air cleaner inlet assembly.

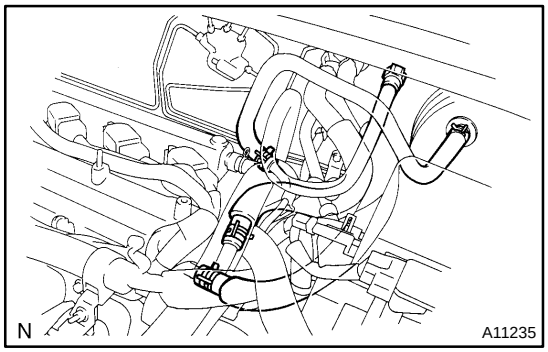

11. **DISCONNECT TUBE, HOSES AND CONNECTORS**

(a) Remove the fuel pipe clamp.
(b) Disconnect the fuel tube from fuel pipe on vehicle side.
(c) Disconnect the heater hose from water bypass pipe.
(d) Disconnect the brake booster vacuum hose from pipe.
(e) Disconnect the heater hose from water hose union on cylinder head.

12. **REMOVE DRIVE BELT AND GENERATOR (See page CH-7)**

13. REMOVE RADIATOR ASSEMBLY (See page CO-16)

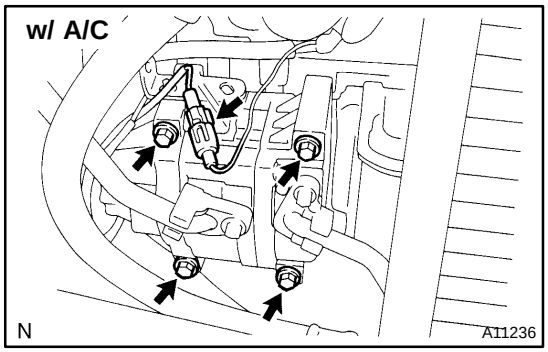

14. w/ A/C:
DISCONNECT A/C COMPRESSOR FROM ENGINE

(a) Disconnect the A/C compressor connector.
(b) Remove the 4 bolts, and disconnect the A/C compressor from the engine.

HINT:
Suspend the A/C compressor securely.

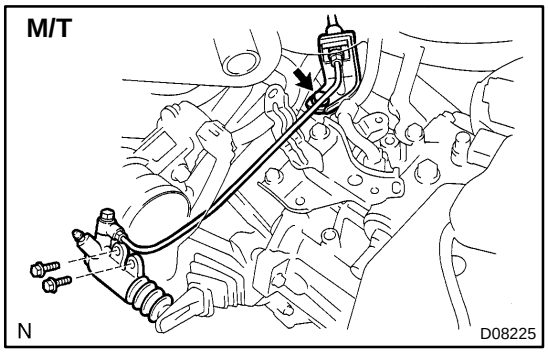

15. M/T:
DISCONNECT CLUTCH RELEASE CYLINDER FROM TRANSAXLE

(a) Remove the bolt, and disconnect the bracket from the transaxle.
(b) Remove the 2 bolts, and disconnect the release cylinder from the transaxle.

16. DISCONNECT TRANSAXLE CONTROL CABLE(S) FROM TRANSAXLE

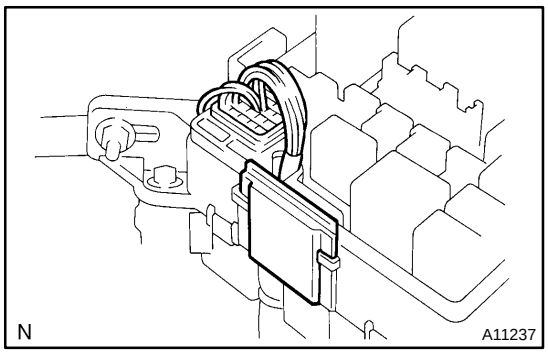

17. DISCONNECT ENGINE WIRE FROM ENGINE COMPARTMENT

(a) Disconnect the connector from the relay box.
(b) Disconnect the cable clamp from the relay box.

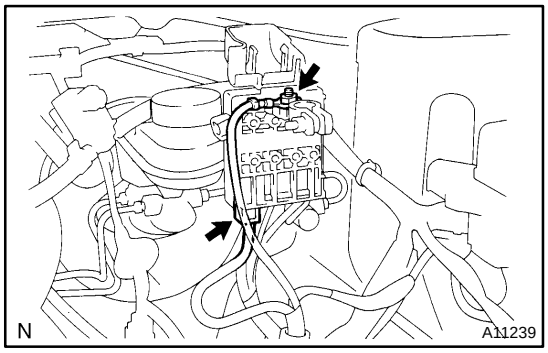

(c) Disconnect the connector from the fusible link.
(d) Disconnect the positive cable from the positive terminal.

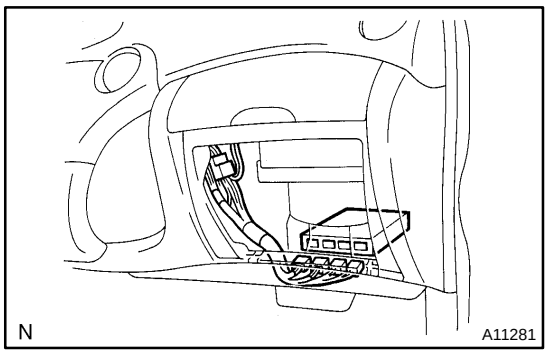

18. DISCONNECT ENGINE WIRE FROM CABIN

(a) Remove the lower panel (See page BO-76).

(b) Disconnect the 4 ECM connectors.

(c) Disconnect the 2 cowl wire connectors from connectors on bracket.

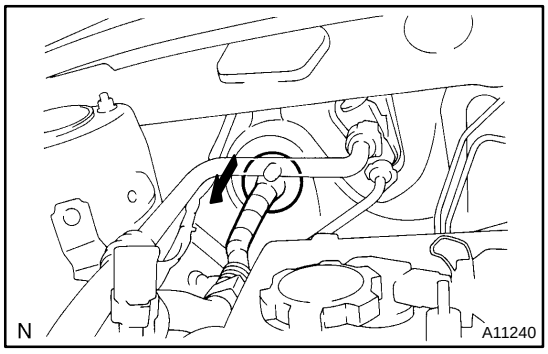

(d) Pull out the engine wire from the cabin.

19. DISCONNECT PS PUMP FROM ENGINE (See page SR-24)

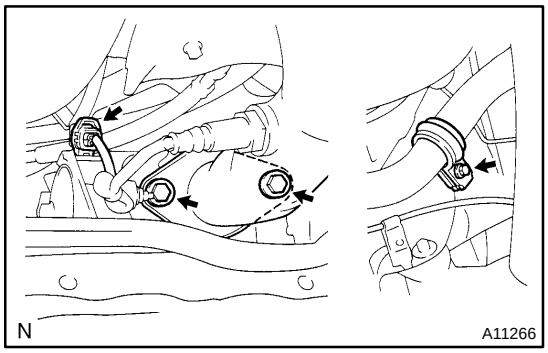

20. REMOVE CENTER EXHAUST PIPE

(a) Disconnect the rear heated oxygen sensor.

(b) Disconnect the connector for front heated oxygen sensor.

(c) Remove the 2 bolts and floor brace.

(d) Remove the 3 bolts, 2 springs and pipe clamp.

(e) Disconnect the 2 O-ring, and remove the center exhaust pipe and 2 gaskets.

21. REMOVE DRIVE SHAFTS (See page SA-18)

22. REMOVE SUSPENSION MEMBER (Manual steering: See page SR-35) (Power steering: See page SR-48)

23. REMOVE REAR ENGINE MOUNTING

(a) Remove the through bolt, lock nut and rear engine mounting insulator.

(b) Remove the 2 bolts, nut and rear engine mounting bracket.

24. ATTACH ENGINE SLING DEVICE TO ENGINE HANGERS

(a) Remove the bolt, and disconnect the condenser.

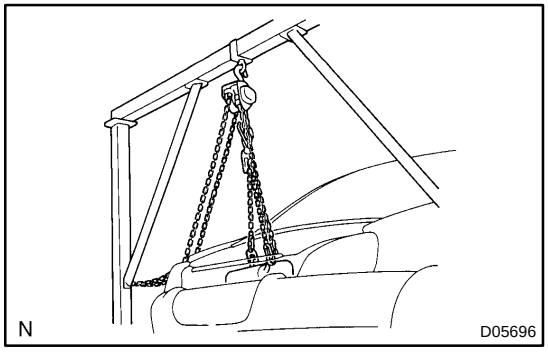

(b) Install the 2 engine hangers in the correct direction.
Engine hanger part No.: 12281-21010
Bolt part No.:
91512-B1016 2 pieces
Torque: 38 N·m (388 kgf·cm, 28 ft·lbf)

(c) Attach the engine sling device to the engine hangers.

CAUTION:
Do not attempt to hang the engine by hooking the chain to any other part.

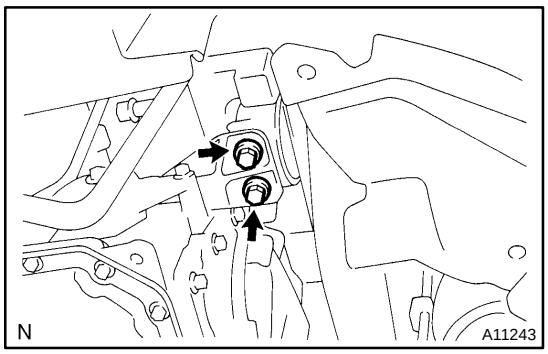

25. REMOVE ENGINE AND TRANSAXLE ASSEMBLY FROM VEHICLE

(a) Remove the 2 bolts, and disconnect the LH engine mounting.

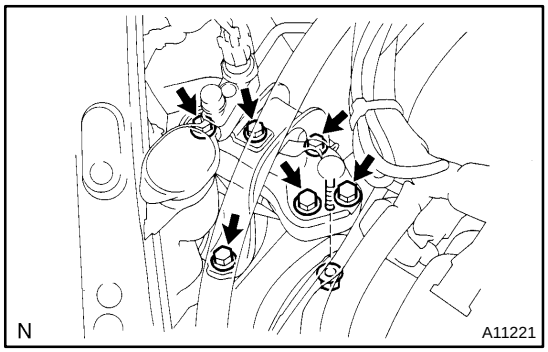

(b) Remove the 2 bolts and nut, and disconnect the RH engine mounting.

(c) Remove the bolt holding the liquid tube to the RH engine mounting insulator.

(d) Remove the 3 bolts and RH engine mounting insulator.

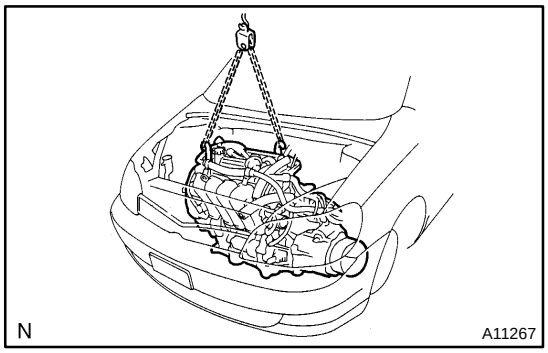

(e) Lift the engine out of the vehicle slowly and carefully.

HINT:

Make sure the engine is clear of steering gear assembly all wiring, hoses and cables

(f) Place the engine and transaxle assembly on to the stand.

26. SEPARATE ENGINE AND TRANSAXLE

(M/T: See page MX-4)

(A/T: See page AX-29)

EXHAUST SYSTEM

COMPONENTS

EM17G-01

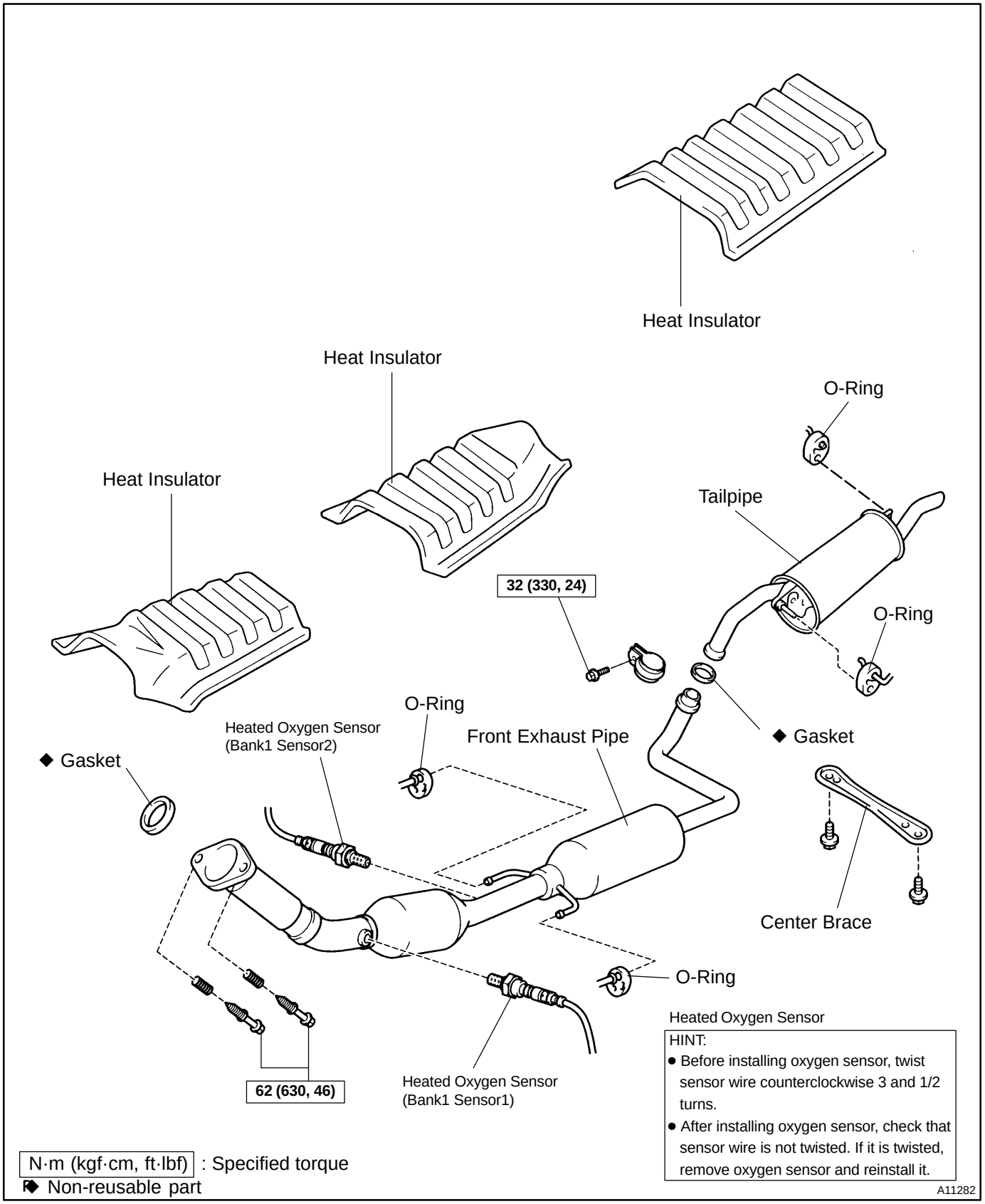

IDLE SPEED

EM16B-01

INSPECTION

1. INSTALL CONDITIONS

(a) Engine at normal operating temperature
(b) Air cleaner installed
(c) All pipes and hoses of air induction system connected
(d) All vacuum lines properly connected
(e) SFI system wiring connectors fully plugged
(f) All operating accessories switched OFF
(g) Ignition timing check correctly
(h) Transmission in neutral position
(i) Air conditioning switched OFF

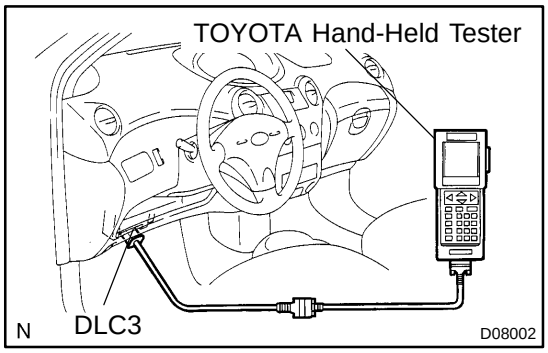

2. CONNECT TOYOTA HAND-HELD TESTER OR OBDII SCAN TOOL

(a) Connect the TOYOTA hand-held tester or OBDII scan tool to the DLC3.
(b) Please refer to the TOYOTA hand-held tester or OBDII scan tool operator's manual for further details.

3. INSPECT IDLE SPEED

(a) Race the engine at 2,500 rpm for approx. 90 seconds.
(b) Check the idle speed.

Idle speed (w/ Cooling fan OFF):
M/T 650 ± 50 rpm
A/T 700 ± 50 rpm

If the idle speed is not as specified, check the IAC valve and air intake system.

4. DISCONNECT TOYOTA HAND-HELD TESTER OR OBDII SCAN TOOL

IGNITION TIMING

EM16A-01

INSPECTION

1. WARM UP ENGINE

Allow the engine to warm up to normal operating temperature.

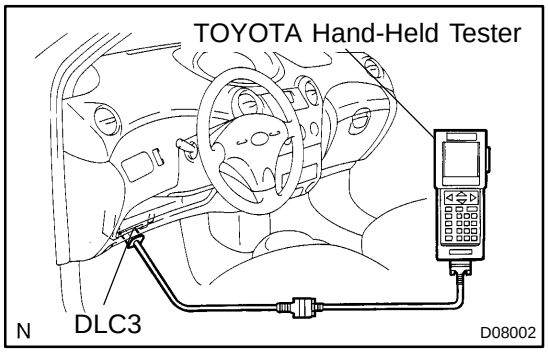

2. CONNECT TOYOTA HAND-HELD TESTER OR OBDII SCAN TOOL

(a) Connect the TOYOTA hand-held tester or OBDII scan tool to the DLC3.

(b) Please refer to the TOYOTA hand-held tester or OBDII scan tool operator's for further details.

3. CONNECT TIMING LIGHT TO ENGINE

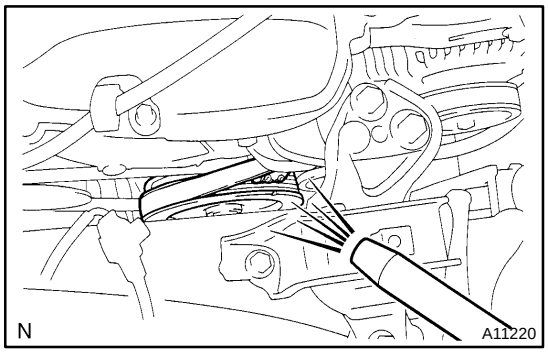

Using a timing light, check the ignition timing.

Ignition timing: 8 - 12˚ BTDC @ idle
(Transmission in neutral position)

4. DISCONNECT TIMING LIGHT FROM ENGINE

5. DISCONNECT TOYOTA HAND- HELD TESTER OR OBDII SCAN TOOL

TIMING CHAIN

EM173-01

COMPONENTS

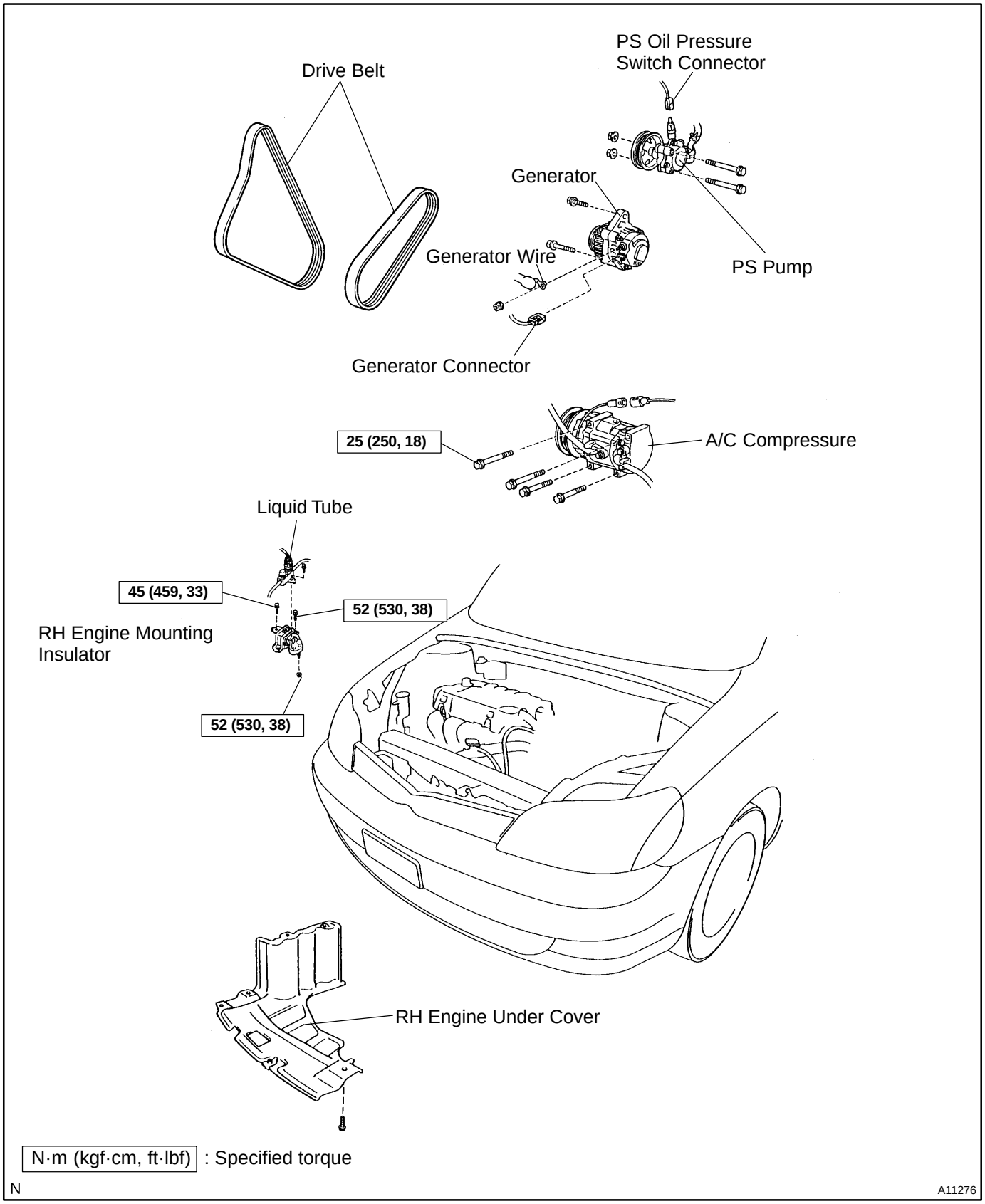

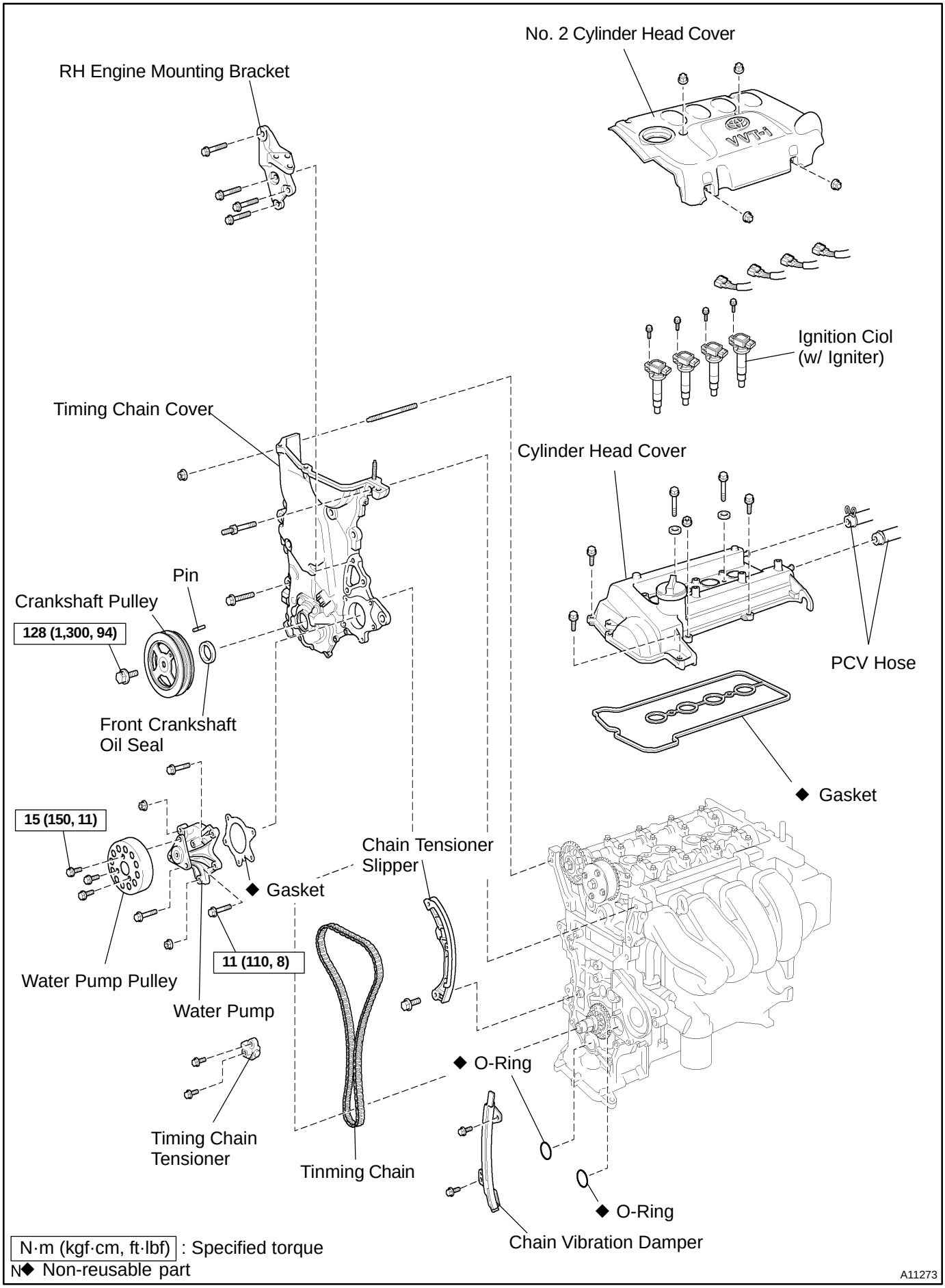
No. 2 Cylinder Head Cover
RH Engine Mounting Bracket
Ignition Ciol
(w/ Igniter)
Timing Chain Cover
Cylinder Head Cover
Pin
Crankshaft Pulley
128 (1,300, 94)
PCV Hose
Front Crankshaft
Oil Seal
◆ Gasket
15 (150, 11)
Chain Tensioner
Slipper
◆ Gasket
11 (110, 8)
Water Pump Pulley
Water Pump
◆ O-Ring
Timing Chain
Tensioner
Tinming Chain
◆ O-Ring
Chain Vibration Damper
N·m (kgf·cm, ft·lbf) : Specified torque
N◆ Non-reusable part
A11273

EM175-01

INSPECTION

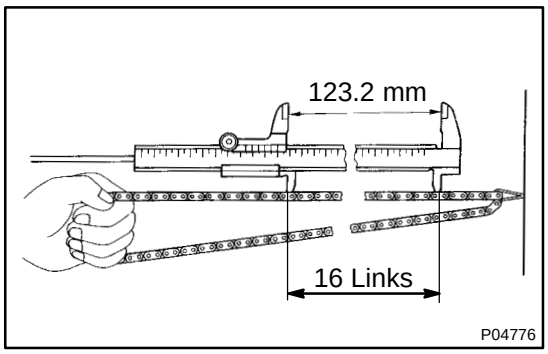

1. INSPECT TIMING CHAIN AND TIMING SPROCKETS

(a) Using a vernier calipers, measure the length of 16 links with the chain dully stretched.

Maximum chain elongation: 123.2 mm (4.850 in.)

If the elongation is greater than maximum, replace the chain.

HINT:

Make the same measurements pulling at 3 or more places selected at random.

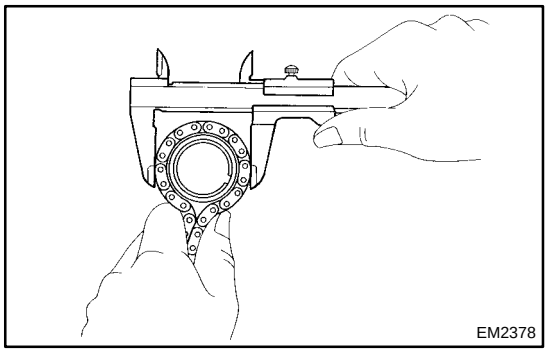

(b) Wrap the chain around the timing sprocket.

(c) Using a vernier calipers, measure the timing sprocket diameter with the chain.

NOTICE:

Vernier calipers must contact the chain rollers for measuring.

Minimum sprocket diameter (w/ Chain):

Camshaft 96.2 mm (3.787 in.)

Crankshaft 50.5 mm (1.988 in.)

If the diameter is less than minimum, replace the chain and sprockets.

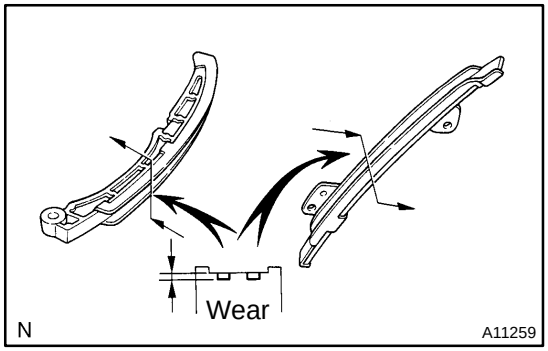

2. INSPECT CHAIN TENSIONER SLIPPER AND VIBRATION DAMPER

Measure the chain tensioner slipper and vibration damper wears.

Maximum wear: 1.0 mm (0.039 in.)

If the wear is greater than maximum, replace the slipper and/or damper.

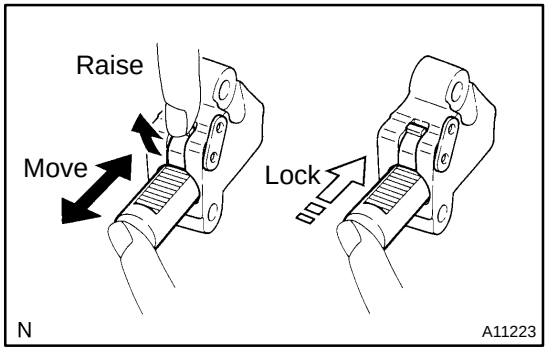

3. INSPECT CHAIN TENSIONER

(a) Check that the plunger moves smoothly when the ratchet pawl is raised with your finger.

(b) Release the ratchet pawl and check that the plunger is

(c) locked in place by the ratchet pawl and does not move when pushed with your finger.

EM177-01

INSTALLATION

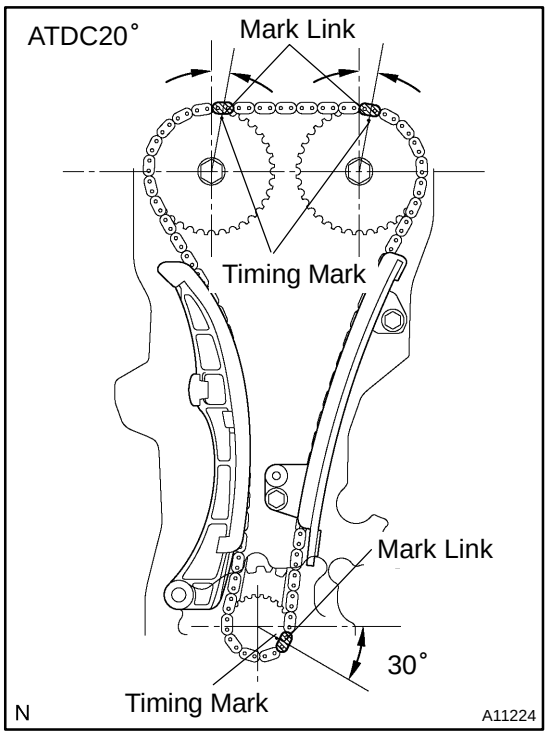

1. INSTALL TIMING CHAIN

(a) After setting the crankshaft at ATDC40-140 °, set cams of intake and exhaust timing sprockets at ATDC 20 ° and then the reset the crankshaft at ATDC 20 °.

(b) Install the chain vibration damper with the 2 bolts.
Torque: 9.0 N·m (92 kgf·cm, 80 in.·lbf)

(c) Align the match marks of timing chain mark plate (Yellow), camshaft timing sprocket, camshaft timing gear and crankshaft timing sprocket to install the timing chain as shown in the illustration.

HINT:

To prevent the exhaust camshaft from spring back turn it using a wrench and set it at the mark on a chain.

(d) Install the chain tensioner slipper.

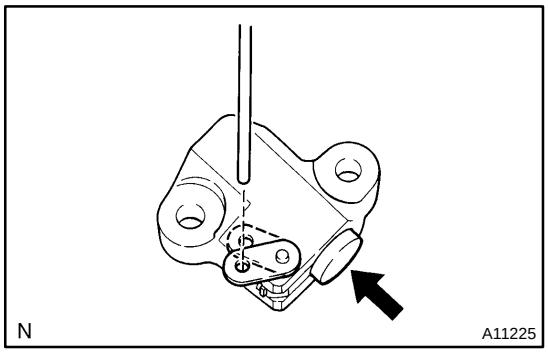

2. INSTALL CHAIN TENSIONER

(a) While rotating the lock plate of the tensioner up-ward, push in the plunger of the tensioner as shown in the illustration.

(b) While rotating the lock plate of the tensioner down-ward, insert a bar of 2.5 mm (0.098 in.) into the holes in the lock plate.

(c) Install the chain tensioner with the 2 bolts.
Torque: 9.0 N·m (92 kgf·cm, 80 in.·lbf)

(d) Remove the bar from the chain tensioner.

(e) Check that the tension between the intake and exhaust camshaft timing sprocket.

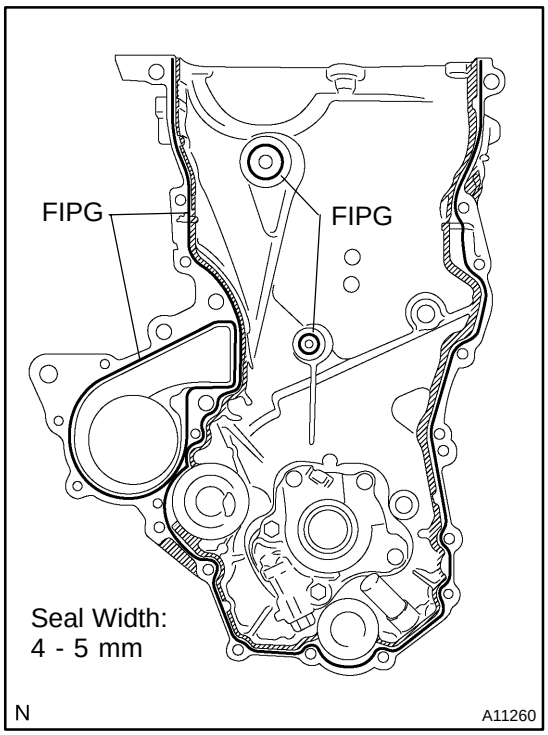

3. INSTALL TIMING CHAIN COVER AND WATER PUMP

(a) Remove any old packing (FIPG) material and be careful not to drop any oil on the contact surfaces of the timing chain cover, cylinder head and cylinder block.

- Using a razor blade and a gasket scraper, remove all the old packing (FIPG) material from the gasket surfaces and sealing grooves.
- Thoroughly clean all components to remove all the loose material.
- Using a non-residue solvent, clean both sealing surfaces.

(b) Apply seal packing to the timing chain cover as shown in the illustration.

Seal packing:
Part No. 08826 - 00100 or equivalent

- Install a nozzle that has been cut to a 4 - 5 mm (0.16 - 0.20 in.) opening.
- FIPG shall be accumulated in the groove for FIPG to a depth of 2.5 mm (0.10 in.) or more.

HINT:
Avoid applying an excessive amount to the surface.

- Parts must be assembled within 3 minutes of application. Otherwise the material must be removed and reapplied.
- Immediately remove nozzle from the tube and reinstall cap.

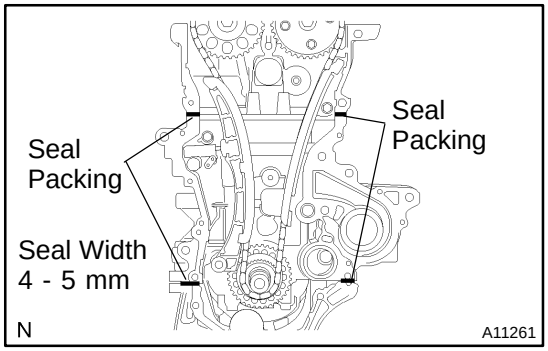

(c) Apply seal packing to 4 locations as shown in the illustration.

Seal packing:
Part No. 08826 - 00080 or equivalent

- Install a nozzle that has been cut to a 4 - 5 mm (0.16 - 0.20 in.) opening.

HINT:
Avoid applying an excessive amount to the surface.

- Parts must be assembled within 3 minutes of application. Otherwise the material must be removed and reapplied.
- Immediately remove nozzle from the tube and reinstall cap.

(d) Install 2 new O-rings to the cylinder block and oil pan No. 1.

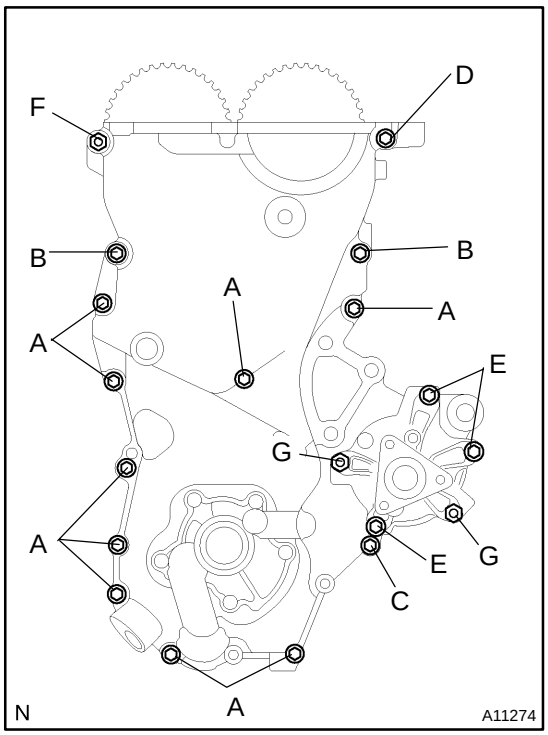

(e) Install the timing chain cover, new O-ring and water pump with the 16 bolts and 3 nuts. Uniformly tighten the bolts and nut in several passes.

Torque:
Bolt A 11 N·m (113 kgf·cm, 8 ft·lbf)
Bolt B 24 N·m (245 kgf·cm, 18 ft·lbf)
Bolt C 11 N·m (113 kgf·cm, 8 ft·lbf)
Bolt D 24 N·m (245 kgf·cm, 18 ft·lbf)
Bolt E 11 N·m (113 kgf·cm, 8 ft·lbf)
Nut F 24 N·m (245 kgf·cm, 18 ft·lbf)
Nut G 11 N·m (113 kgf·cm, 8 ft·lbf)

NOTICE:

- **Pay attention not to wrap the chain and slipper over the chain cover seal line.**
- **After installing the chain cover, must install the mounting bracket and water pump within 15 minutes.**

HINT:
Each bolt length in indicated in the illustration.
A 20 mm (0.787 in.)
B 30 mm (1.181 in.)
C 35 mm (1.378 in.)
D 20 - 14 mm (0.787 - 0.551 in.)
E 35 mm (1.378 in.)

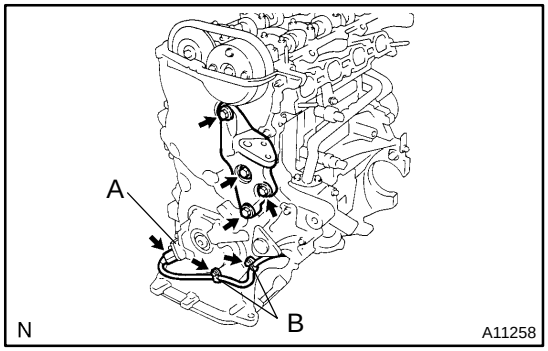

4. INSTALL RH ENGINE MOUNTING BRACKET

(a) Apply seal packing to threads of the mounting bolt.

Seal packing:
Part No. 08826 - 00080 or equivalent

HINT:
Do not apply seal packing to 2 or 3 threads of the bolt end.

(b) Install the mounting bracket with the 4 bolts.

Torque: 55 N·m (561 kgf·cm, 41 ft·lbf)

5. INSTALL CRANKSHAFT POSITION SENSOR

Torque:
Bolt A 7.5 N·m (76 kgf·cm, 66 in.·lbf)
Bolt B 11 N·m (113 kgf·cm, 8 ft·lbf)

6. INSTALL OIL CONTROL VALVE (See page EM-44)

Torque: 8.0 N·m (82 kgf·cm, 71 in.·lbf)

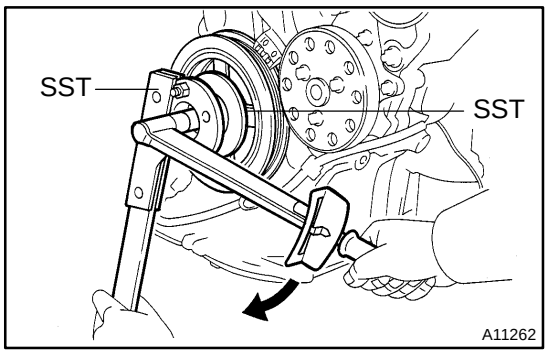

7. INSTALL CRANKSHAFT PULLEY

(a) Clean the crankshaft pulley inside.

(b) Install the pin to the crankshaft.

(c) Align the hole in the crank pulley with the pin position and install the crank pulley.

(d) Using SST, install the pulley bolt.

SST 09213-70010, 09330-00021

Torque: 128 N·m (1,300 kgf·cm, 94 ft·lbf)

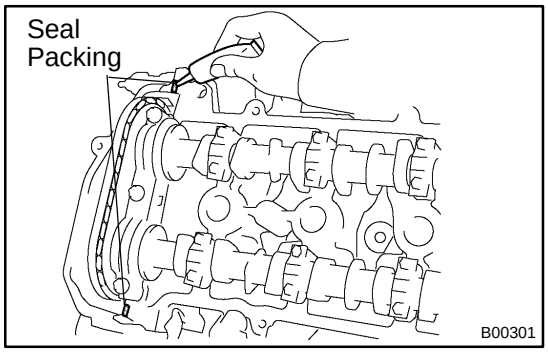

8. INSTALL CYLINDER HEAD COVER

(a) Remove any old packing (FIPG) material.

(b) Apply seal packing to 2 locations as shown in the illustration.

Seal packing:

Part No. 08826 - 00080 or equivalent

(c) Install the gasket to the cylinder head cover.

HINT:

Part must be assembled within 3 minutes of application. Otherwise the material must be remove and reapplied.

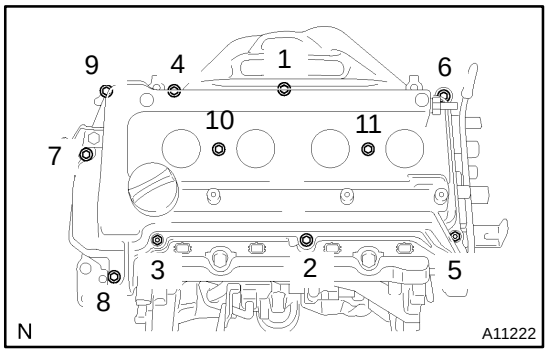

(d) Install the cylinder head cover and cable bracket with the 7 bolts, 2 seal washers and 2 nuts.

Uniformly tighten the bolts and nuts, in the several passes, in the sequence shown.

Torque: 10 N·m (100 kgf·cm, 7 ft·lbf)

(e) Connect the 2 PCV hoses to the cylinder head cover.

(f) Install the ignition coil (See page IG-7).

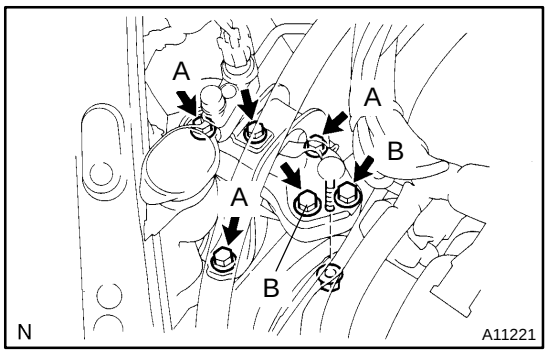

9. INSTALL RH ENGINE MOUNTING INSULATOR

(a) Install the RH engine mounting insulator with the 5 bolts and nut.

Torque:

Bolt A 45 N·m (459 kgf·cm, 33 ft·lbf)

Bolt B and nut 52 N·m (530 kgf·cm, 38 ft·lbf)

(b) w/ A/C:

Install the liquid tube with the bolt.

10. INSTALL PS PUMP (See page SR-32)

11. INSTALL GENERATOR AND DRIVE BELT (See page CH-17)

12. INSTALL RH ENGINE UNDER COVER

13. INSTALL RH FRONT WHEEL

14. FILL WITH ENGINE COOLANT

15. START ENGINE AND CHECK FOR COOLANT LEAKS

EM174-03

REMOVAL

1. **DRAIN ENGINE COOLANT**
2. **REMOVE RH FRONT WHEEL**
3. **REMOVE RH ENGINE UNDER COVER**
4. **REMOVE DRIVE BELT AND GENERATOR**
   (See page CH-7)
5. **DISCONNECT PS PUMP FROM ENGINE**
   (See page SR-24)

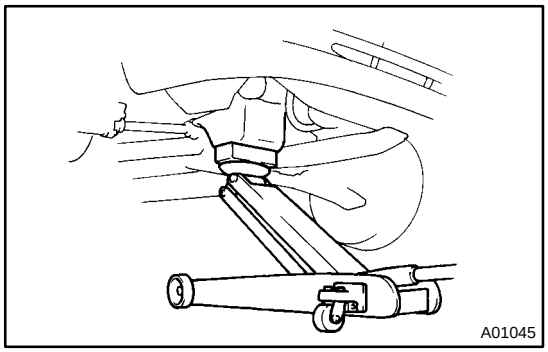

6. **REMOVE RH ENGINE MOUNTING INSULATOR**

(a) Set the jack to the engine.

HINT:

Place a wooden block between the jack and engine.

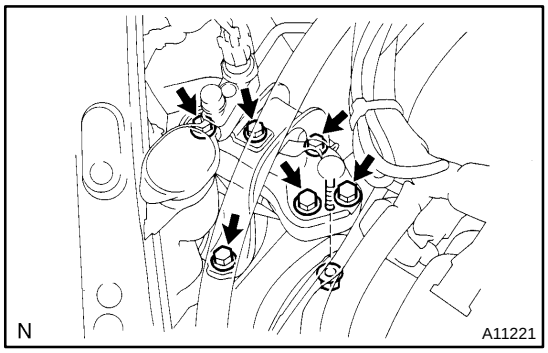

(b) w/ A/C:
Remove the bolt holding the liquid tube to the RH engine mounting insulator.

(c) Remove the 5 bolts, nut and RH engine mounting insulator.

7. **REMOVE CYLINDER HEAD COVER**

(a) Remove the 4 nuts and No.2 cylinder head cover.

(b) Remove the ignition coils (See page IG-6).

(c) Remove the 2 PCV hoses from the cylinder head cover.

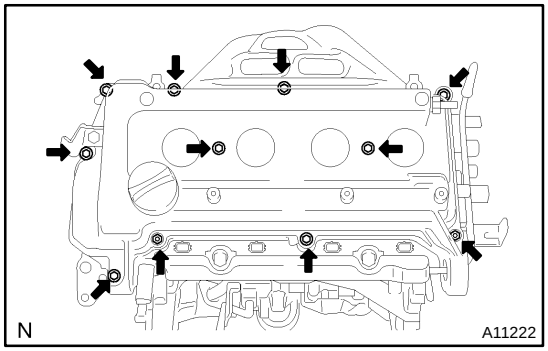

(d) Remove the 7 bolts, 2 seal washers, 2 nuts, cylinder head cover and gasket.

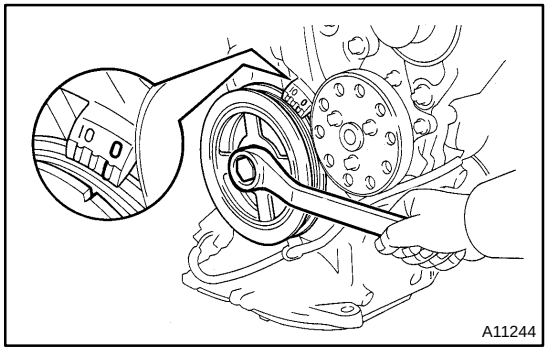

8. **SET NO.1 CYLINDER TO TDC/COMPRESSION**

(a) Turn the crankshaft pulley, and align its groove with timing mark ”0” of the timing chain cover.

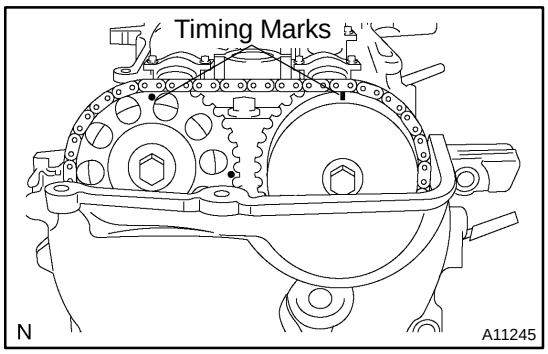

(b) Check that both timing marks on the camshaft timing sprocket and valve timing controller assembly are facing right up as shown in the illustration.

If not, turn the crankshaft 1 revolution (360˚) and align the marks as above.

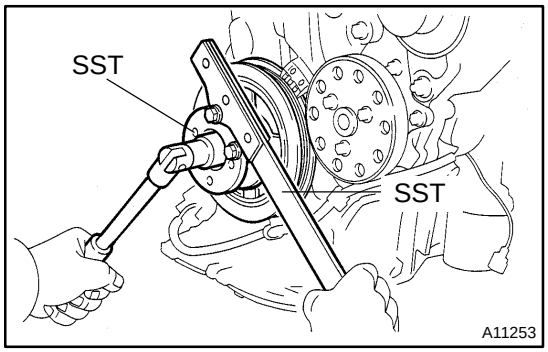

9. REMOVE CRANKSHAFT PULLEY

(a) Using SST, remove the pulley bolt.
SST 09213-70010, 09330-00021

(b) Remove the crankshaft pulley and pin.

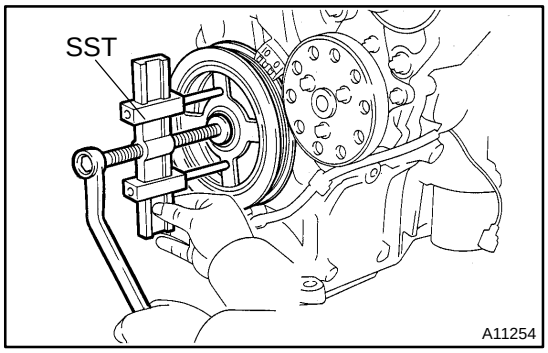

HINT:
If necessary, remove the pulley with SST.
SST 09950-50013 (09951-05010, 09952-05010, 09953-05020, 09954-05021)

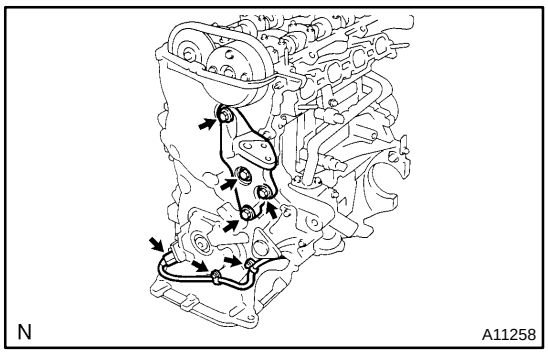

10. REMOVE CRANKSHAFT POSITION SENSOR (See page IG-12)

11. REMOVE RH ENGINE MOUNTING BRACKET

Remove the 4 bolts and mounting bracket.

12. REMOVE WATER PUMP (See page CO-4)

13. REMOVE OIL CONTROL VALVE (See page EM-28)

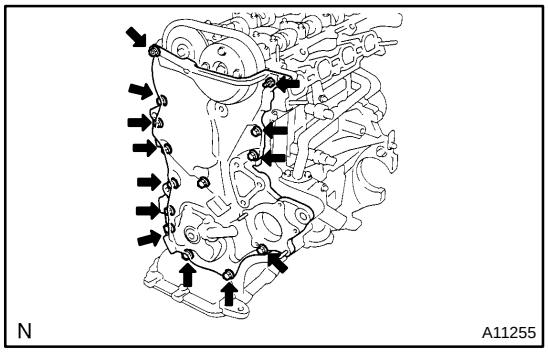

14. REMOVE TIMING CHAIN COVER

(a) Remove the 13 bolts and nut.

(b) Using a torx wrench socket (E8), remove the stud bolt.

(c) Remove the timing chain cover by prying the portions between the cylinder head and cylinder block with a screwdriver.

NOTICE:

Be careful not to damage the contact surfaces of the timing chain cover, cylinder head and cylinder block.

(d) Remove the 2 O-rings from the cylinder block and oil pan No.1.

15. REMOVE CHAIN TENSIONER

Remove the 2 bolts and chain tensioner.

16. REMOVE CHAIN TENSIONER SLIPPER

17. REMOVE CHAIN VIBRATION DAMPER

Remove the 2 bolts and damper.

18. REMOVE TIMING CHAIN

EM176-01

REPLACEMENT

REPLACE CRANKSHAFT FRONT OIL SEAL

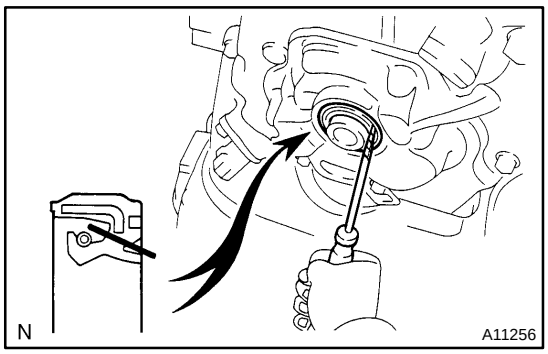

(a) Using a knife, cut off the oil seal lip.

(b) Using a screwdriver, pry out the oil seal.

NOTICE:

Be careful not to damage the crankshaft. Tape the screwdriver tip.

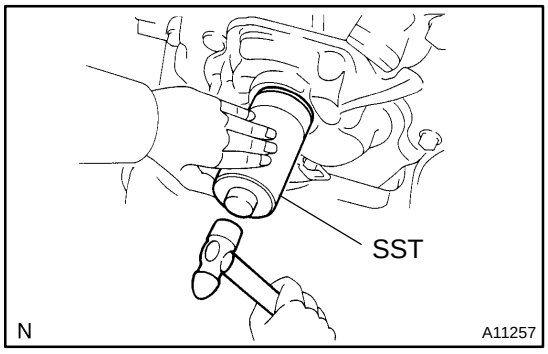

(c) Using SST and a hammer, tap in the oil seal until its surface is flush with the timing chain cover edge.
SST 09612-2201 1

VALVE CLEARANCE

ADJUSTMENT

EM169-01

HINT:

Inspect and adjust the valve clearance when the engine is cold.

1. REMOVE CYLINDER HEAD COVER

(See page EM-15)

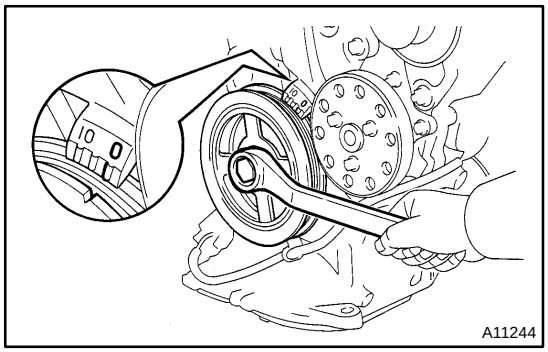

2. SET NO.1 CYLINDER TO TDC/COMPRESSION

(a) Turn the crankshaft pulley, and align its groove with the timing mark ”0” of the timing chain cover.

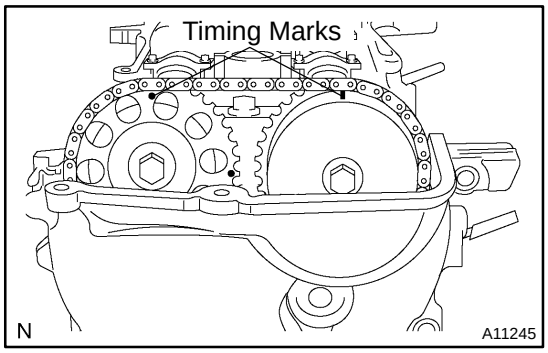

(b) Check that both timing marks on the camshaft timing sprocket and valve timing controller assembly are facing right upas shown in the illustration.

If not, turn the crankshaft 1 revolution (360˚) and align the marks as above.

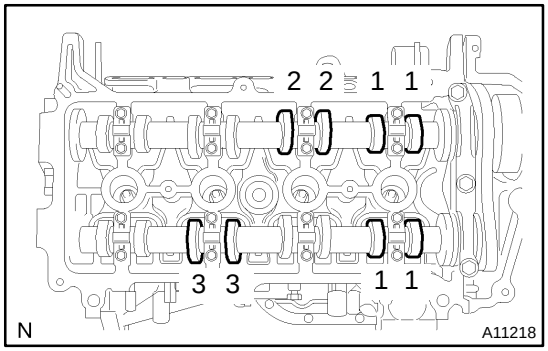

3. INSPECT VALVE CLEARANCE

(a) Check only the valves indicated.

- Using a feeler gauge, measure the clearance between the valve lifter and camshaft.
- Record the out-of-specification valve clearance measurements. They will be used later to determine the required replacement adjusting shim.

Valve clearance (Cold):

Intake: 0.15 - 0.25 mm (0.006 - 0.010 in.)

Exhaust: 0.25 - 0.35 mm (0.010 - 0.014 in.)

(b) Turn the crankshaft 1 revolution (360˚) and align the mark as above. (See procedure in step 2)

(c) Check only the valves indicated as shown. Measure the valve clearance. (See procedure in step (a))

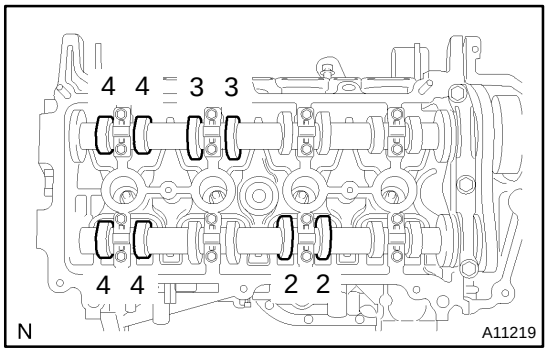

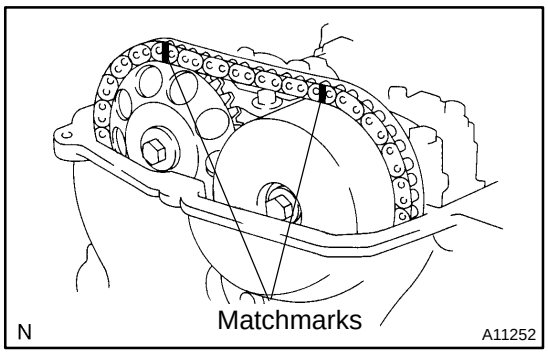

4. ADJUST VALVE CLEARANCE

(a) Set the No.1 cylinder to the TDC/compression (See procedure in step 2).

(b) Place matchmarks on the timing chain and camshaft timing sprockets.

(c) Rotate the crankshaft countercleckwise 40° from the TDC.

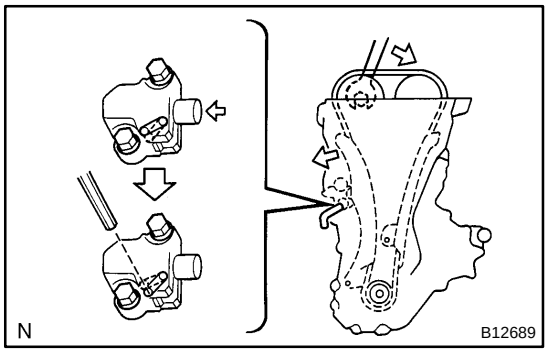

(d) Remove the plug from the timing chain cover.

(e) Using driver to hold the stopper plate of tensioner above the chain tentioner service hole.

(f) Turn the exhaust camshaft a little clockwise.

(g) Remove the driver from the chain tensioner service hole to lower the stopper plate, then insert the bar of 2 - 3 mm (0.08 - 0.12 in.).

NOTICE:

- **When the bar does not get inserted, turn the exhaust camshaft a little counterclockwise, then clockwise to insert it.**
- **Fix the bar with tape or others so that it does not be dropped off.**

(h) Hold the hexagonal portion of camshaft with a wrench, and loosen the bolt for camshaft timing sprocket.

(i) Remove the 19 bolts, No. 1 and No. 2 camshaft bearing caps.

(j) Remove the bolt and valve timing sprocket with the chain.

(k) Hold the hexagonal portion of the camshaft with a wrench, and remove the bolt and valve timing controller assembly with the chain.

NOTICE:

Do not disassembled the valve timing controller assembly.

(l) Remove the intake and exhaust camshaft assembly.

HINT:

When disconnect the timing chain from the camshaft timing sprocket, holding the timing chain.

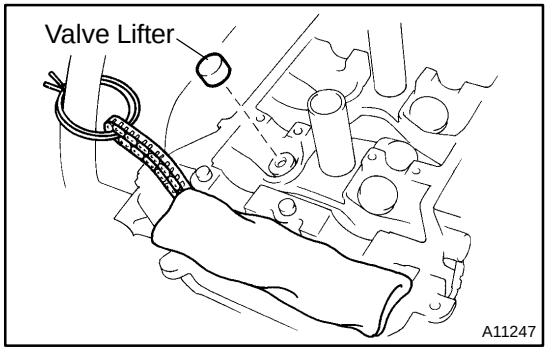

(m) Tie the timing chain with a string as shown in the illustration.

NOTICE:

- **Be careful not to drop anything inside the timing chain cover.**
- **Do not allow the chain to come into contact with water or dust.**

(n) Remove the valve lifters.

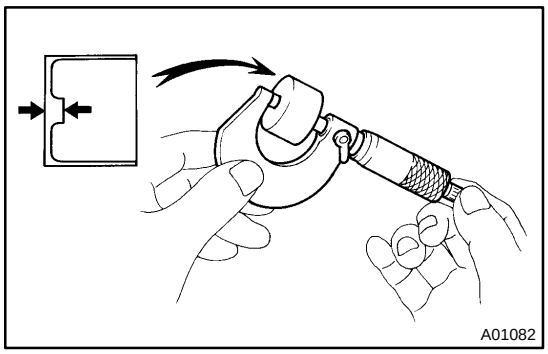

(o) Determine the replacement valve lifter size according to these Formula or Charts:

- Using a micrometer, measure the thickness of the removed lifter.
- Calculate the thickness of a new lifter so the valve clearance comes within the specified value.

T..... Thickness of used lifter
A..... Measured valve clearance
N..... Thickness of new lifter
Intake: N = T + (A - 0.20 mm (0.008 in.))
Exhaust: N = T + (A - 0.30 mm (0.012 in.))

- Select a new lifter with a thickness as close as possible to the calculated values.

HINT:
Lifter are available in 35 sizes in increments of 0.020 mm (0.0008 in.), from 5.060 mm (0.1992 in.) to 5.740 mm (0.2260 in.).

Valve Lifter Selection Chart (Intake)

Measured clearance mm (in.) \ Installed lifter thickness mm (in.)	5.060 (0.1992)	5.080 (0.2000)	5.100 (0.2008)	5.120 (0.2016)	5.140 (0.2024)	5.160 (0.2031)	5.180 (0.2039)	5.200 (0.2047)	5.210 (0.2051)	5.220 (0.2055)	5.230 (0.2059)	5.240 (0.2063)	5.250 (0.2067)	5.260 (0.2071)	5.270 (0.2075)	5.280 (0.2079)	5.290 (0.2083)	5.300 (0.2087)	5.310 (0.2091)	5.320 (0.2094)	5.330 (0.2098)	5.340 (0.2102)	5.350 (0.2106)	5.360 (0.2110)	5.370 (0.2114)	5.380 (0.2118)	5.390 (0.2122)	5.400 (0.2126)	5.410 (0.2130)	5.420 (0.2134)	5.430 (0.2138)	5.440 (0.2142)	5.450 (0.2146)	5.460 (0.2150)	5.470 (0.2154)	5.480 (0.2157)	5.490 (0.2161)	5.500 (0.2165)	5.510 (0.2169)	5.520 (0.2173)	5.530 (0.2177)	5.540 (0.2181)	5.550 (0.2185)	5.560 (0.2189)	5.570 (0.2193)	5.580 (0.2197)	5.590 (0.2201)	5.600 (0.2205)	5.620 (0.2213)	5.640 (0.2220)	5.660 (0.2228)	5.680 (0.2236)	5.700 (0.2244)	5.720 (0.2252)	5.740 (0.2260)
0.000 – 0.030 (0.0000 – 0.0012)									06	06	06	06	06	08	10	10	12	12	14	14	16	16	18	18	20	20	22	22	24	24	26	26	28	28	30	30	32	32	34	34	36	36	38	38	40	40	42	42	44	46	48	50	52	54	56
0.031 – 0.050 (0.0012 – 0.0020)							06	06	06	06	08	08	10	10	12	12	14	14	16	16	18	18	20	20	22	22	24	24	26	26	28	28	30	30	32	32	34	34	36	36	38	38	40	40	42	42	44	44	46	48	50	52	54	56	58
0.051 – 0.070 (0.0020 – 0.0028)						06	06	06	08	08	10	10	12	12	14	14	16	16	18	18	20	20	22	22	24	24	26	26	28	28	30	30	32	32	34	34	36	36	38	38	40	40	42	42	44	44	46	46	48	50	52	54	56	58	60
0.071 – 0.090 (0.0028 – 0.0035)					06	06	06	08	10	10	12	12	14	14	16	16	18	18	20	20	22	22	24	24	26	26	28	28	30	30	32	32	34	34	36	36	38	38	40	40	42	42	44	44	46	46	48	48	50	52	54	56	58	60	62
0.091 – 0.110 (0.0036 – 0.0043)				06	06	06	08	10	12	12	14	14	16	16	18	18	20	20	22	22	24	24	26	26	28	28	30	30	32	32	34	34	36	36	38	38	40	40	42	42	44	44	46	46	48	48	50	50	52	54	56	58	60	62	64
0.111 – 0.130 (0.0044 – 0.0051)			06	06	06	08	10	12	14	14	16	16	18	18	20	20	22	22	24	24	26	26	28	28	30	30	32	32	34	34	36	36	38	38	40	40	42	42	44	44	46	46	48	48	50	50	52	52	54	56	58	60	62	64	66
0.131 – 0.149 (0.0052 – 0.0059)		06	06	06	08	10	12	14	16	16	18	18	20	20	22	22	24	24	26	26	28	28	30	30	32	32	34	34	36	36	38	38	40	40	42	42	44	44	46	46	48	48	50	50	52	52	54	54	56	58	60	62	64	66	68
0.150 – 0.250 (0.0059 – 0.0098)																																																									
0.251 – 0.270 (0.0099 – 0.0106)	12	14	16	18	20	22	24	26	28	28	30	30	32	32	34	34	36	36	38	38	40	40	42	42	44	44	46	46	48	48	50	50	52	52	54	54	56	56	58	58	60	60	62	62	64	64	66	66	68	70	72	74	74	74
0.271 – 0.290 (0.0107 – 0.0114)	14	16	18	20	22	24	26	28	30	30	32	32	34	34	36	36	38	38	40	40	42	42	44	44	46	46	48	48	50	50	52	52	54	54	56	56	58	58	60	60	62	62	64	64	66	66	68	68	70	72	74	74	74	
0.291 – 0.310 (0.0115 – 0.0122)	16	18	20	22	24	26	28	30	32	32	34	34	36	36	38	38	40	40	42	42	44	44	46	46	48	48	50	50	52	52	54	54	56	56	58	58	60	60	62	62	64	64	66	66	68	68	70	70	72	74	74	74		
0.311 – 0.330 (0.0122 – 0.0130)	18	20	22	24	26	28	30	32	34	34	36	36	38	38	40	40	42	42	44	44	46	46	48	48	50	50	52	52	54	54	56	56	58	58	60	60	62	62	64	64	66	66	68	68	70	70	72	72	74	74	74			
0.331 – 0.350 (0.0130 – 0.0138)	20	22	24	26	28	30	32	34	36	36	38	38	40	40	42	42	44	44	46	46	48	48	50	50	52	52	54	54	56	56	58	58	60	60	62	62	64	64	66	66	68	68	70	70	72	72	74	74	74					
0.351 – 0.370 (0.0138 – 0.0146)	22	24	26	28	30	32	34	36	38	38	40	40	42	42	44	44	46	46	48	48	50	50	52	52	54	54	56	56	58	58	60	60	62	62	64	64	66	66	68	68	70	70	72	72	74	74	74	74						
0.371 – 0.390 (0.0146 – 0.0154)	24	26	28	30	32	34	36	38	40	40	42	42	44	44	46	46	48	48	50	50	52	52	54	54	56	56	58	58	60	60	62	62	64	64	66	66	68	68	70	70	72	72	74	74	74	74	74	74						
0.391 – 0.410 (0.0154 – 0.0161)	26	28	30	32	34	36	38	40	42	42	44	44	46	46	48	48	50	50	52	52	54	54	56	56	58	58	60	60	62	62	64	64	66	66	68	68	70	70	72	72	74	74	74	74	74	74	74							
0.411 – 0.430 (0.0162 – 0.0169)	28	30	32	34	36	38	40	42	44	44	46	46	48	48	50	50	52	52	54	54	56	56	58	58	60	60	62	62	64	64	66	66	68	68	70	70	72	72	74	74	74	74	74	74	74								
0.431 – 0.450 (0.0170 – 0.0177)	30	32	34	36	38	40	42	44	46	46	48	48	50	50	52	52	54	54	56	56	58	58	60	60	62	62	64	64	66	66	68	68	70	70	72	72	74	74	74	74	74	74												
0.451 – 0.470 (0.0178 – 0.0185)	32	34	36	38	40	42	44	46	48	48	50	50	52	52	54	54	56	56	58	58	60	60	62	62	64	64	66	66	68	68	70	70	72	72	74	74	74	74	74	74														
0.471 – 0.490 (0.0185 – 0.0193)	34	36	38	40	42	44	46	48	50	50	52	52	54	54	56	56	58	58	60	60	62	62	64	64	66	66	68	68	70	70	72	72	74	74	74	74	74	74																
0.491 – 0.510 (0.0193 – 0.0201)	36	38	40	42	44	46	48	50	52	52	54	54	56	56	58	58	60	60	62	62	64	64	66	66	68	68	70	70	72	72	74	74	74	74	74	74																		
0.511 – 0.530 (0.0201 – 0.0209)	38	40	42	44	46	48	50	52	54	54	56	56	58	58	60	60	62	62	64	64	66	66	68	68	70	70	72	72	74	74	74	74	74	74																			
0.531 – 0.550 (0.0209 – 0.0217)	40	42	44	46	48	50	52	54	56	56	58	58	60	60	62	62	64	64	66	66	68	68	70	70	72	72	74	74	74	74	74	74																				
0.551 – 0.570 (0.0217 – 0.0224)	42	44	46	48	50	52	54	56	58	58	60	60	62	62	64	64	66	66	68	68	70	70	72	72	74	74	74	74	74	74	74																					
0.571 – 0.590 (0.0225 – 0.0232)	44	46	48	50	52	54	56	58	60	60	62	62	64	64	66	66	68	68	70	70	72	72	74	74	74	74	74	74																							
0.591 – 0.610 (0.0233 – 0.0240)	46	48	50	52	54	56	58	60	62	62	64	64	66	66	68	68	70	70	72	72	74	74	74	74	74	74																							
0.611 – 0.630 (0.0241 – 0.0248)	48	50	52	54	56	58	60	62	64	64	66	66	68	68	70	70	72	72	74	74	74	74	74	74																							
0.631 – 0.650 (0.0248 – 0.0256)	50	52	54	56	58	60	62	64	66	66	68	68	70	70	72	72	74	74	74	74	74	74																							
0.651 – 0.670 (0.0256 – 0.0264)	52	54	56	58	60	62	64	66	68	68	70	70	72	72	74	74	74	74	74	74																							
0.671 – 0.690 (0.0264 – 0.0272)	54	56	58	60	62	64	66	68	70	70	72	72	74	74	74	74	74	74																							
0.691 – 0.710 (0.0272 – 0.0280)	56	58	60	62	64	66	68	70	72	72	74	74	74	74	74	74																							
0.711 – 0.730 (0.0280 – 0.0287)	58	60	62	64	66	68	70	72	74	74	74	74	74	74																							
0.731 – 0.750 (0.0288 – 0.0295)	60	62	64	66	68	70	72	74	74	74	74	74																							
0.751 – 0.770 (0.0296 – 0.0303)	62	64	66	68	70	72	74	74	74	74																							
0.771 – 0.790 (0.0304 – 0.0311)	64	66	68	70	72	74	74	74																									
0.791 – 0.810 (0.0311 – 0.0319)	66	68	70	72	74	74	74																										
0.811 – 0.830 (0.0319 – 0.0327)	68	70	72	74	74	74																											
0.831 – 0.850 (0.0327 – 0.0335)	70	72	74	74	74																												
0.851 – 0.870 (0.0335 – 0.0343)	72	74	74	74																													
0.871 – 0.890 (0.0343 – 0.0350)	74	74	74																														
0.891 – 0.910 (0.0351 – 0.0358)	74	74																															
0.911 – 0.930 (0.0359 – 0.0366)	74																																

Intake valve clearance (Cold):
0.15 - 0.25 mm (0.006 - 0.010 in.)

EXAMPLE: The 5.250 mm (0.2067 in.) lifter is installed, and the measured clearance is 0.400 mm (0.0157 in.).
Replace the 5.250 mm (0.2067 in.) lifter with a new No. 48 lifter.

New lifter thickness mm (in.)

Lifter No.	Thickness	Lifter No.	Thickness	Lifter No.	Thickness
06	5.060 (0.1992)	30	5.300 (0.2087)	54	5.540 (0.2181)
08	5.080 (0.2000)	32	5.320 (0.2094)	56	5.560 (0.2189)
10	5.100 (0.2008)	34	5.340 (0.2102)	58	5.580 (0.2197)
12	5.120 (0.2016)	36	5.360 (0.2110)	60	5.600 (0.2205)
14	5.140 (0.2024)	38	5.380 (0.2118)	62	5.620 (0.2213)
16	5.160 (0.2031)	40	5.400 (0.2126)	64	5.640 (0.2220)
18	5.180 (0.2039)	42	5.420 (0.2134)	66	5.660 (0.2228)
20	5.200 (0.2047)	44	5.440 (0.2142)	68	5.680 (0.2236)
22	5.220 (0.2055)	46	5.460 (0.2150)	70	5.700 (0.2244)
24	5.240 (0.2063)	48	5.480 (0.2157)	72	5.720 (0.2252)
26	5.260 (0.2071)	50	5.500 (0.2165)	74	5.740 (0.2260)
28	5.280 (0.2079)	52	5.520 (0.2173)		

A01234

Valve Lifter Selection Chart (Exhaust)

Measured clearance mm (in.) \ Installed lifter thickness mm (in.)	5.060 (0.1992)	5.080 (0.2000)	5.100 (0.2008)	5.120 (0.2016)	5.140 (0.2024)	5.160 (0.2031)	5.180 (0.2039)	5.200 (0.2047)	5.210 (0.2051)	5.220 (0.2055)	5.230 (0.2059)	5.240 (0.2063)	5.250 (0.2067)	5.260 (0.2071)	5.270 (0.2075)	5.280 (0.2079)	5.290 (0.2083)	5.300 (0.2087)	5.310 (0.2091)	5.320 (0.2094)	5.330 (0.2098)	5.340 (0.2102)	5.350 (0.2106)	5.360 (0.2110)	5.370 (0.2114)	5.380 (0.2118)	5.390 (0.2122)	5.400 (0.2126)	5.410 (0.2130)	5.420 (0.2134)	5.430 (0.2138)	5.440 (0.2142)	5.450 (0.2146)	5.460 (0.2150)	5.470 (0.2154)	5.480 (0.2157)	5.490 (0.2161)	5.500 (0.2165)	5.510 (0.2169)	5.520 (0.2173)	5.530 (0.2177)	5.540 (0.2181)	5.550 (0.2185)	5.560 (0.2189)	5.570 (0.2193)	5.580 (0.2197)	5.590 (0.2201)	5.600 (0.2205)	5.620 (0.2213)	5.640 (0.2220)	5.660 (0.2228)	5.680 (0.2236)	5.700 (0.2244)	5.720 (0.2252)	5.740 (0.2260)
0.000 – 0.030 (0.0000 – 0.0012)																			06	06	06	06	08	08	10	10	12	12	14	14	16	16	18	18	20	20	22	22	24	24	26	26	28	28	30	30	32	32	34	36	38	40	42	44	46
0.031 – 0.050 (0.0012 – 0.0020)																06	06	06	06	06	08	08	10	10	12	12	14	14	16	16	18	18	20	20	22	22	24	24	26	26	28	28	30	30	32	32	34	34	36	38	40	42	44	46	48
0.051 – 0.070 (0.0020 – 0.0028)														06	06	06	06	06	08	08	10	10	12	12	14	14	16	16	18	18	20	20	22	22	24	24	26	26	28	28	30	30	32	32	34	34	36	36	38	40	42	44	46	48	50
0.071 – 0.090 (0.0028 – 0.0035)												06	06	06	06	06	08	08	10	10	12	12	14	14	16	16	18	18	20	20	22	22	24	24	26	26	28	28	30	30	32	32	34	34	36	36	38	38	40	42	44	46	48	50	52
0.091 – 0.110 (0.0036 – 0.0043)										06	06	06	06	08	08	10	10	12	12	14	14	16	16	18	18	20	20	22	22	24	24	26	26	28	28	30	30	32	32	34	34	36	36	38	38	40	40	42	44	46	48	50	52	54
0.111 – 0.130 (0.0044 – 0.0051)									06	06	06	06	08	08	10	10	12	12	14	14	16	16	18	18	20	20	22	22	24	24	26	26	28	28	30	30	32	32	34	34	36	36	38	38	40	40	42	42	44	46	48	50	52	54	56
0.131 – 0.150 (0.0052 – 0.0059)								06	06	06	08	08	10	10	12	12	14	14	16	16	18	18	20	20	22	22	24	24	26	26	28	28	30	30	32	32	34	34	36	36	38	38	40	40	42	42	44	44	46	48	50	52	54	56	58
0.151 – 0.170 (0.0059 – 0.0067)						06	06	06	08	08	10	10	12	12	14	14	16	16	18	18	20	20	22	22	24	24	26	26	28	28	30	30	32	32	34	34	36	36	38	38	40	40	42	42	44	44	46	46	48	50	52	54	56	58	60
0.171 – 0.190 (0.0067 – 0.0075)				06	06	06	08	10	10	12	12	14	14	16	16	18	18	20	20	22	22	24	24	26	26	28	28	30	30	32	32	34	34	36	36	38	38	40	40	42	42	44	44	46	46	48	48	50	52	54	56	58	60	62
0.191 – 0.210 (0.0075 – 0.0083)			06	06	06	08	10	12	12	14	14	16	16	18	18	20	20	22	22	24	24	26	26	28	28	30	30	32	32	34	34	36	36	38	38	40	40	42	42	44	44	46	46	48	48	50	50	52	54	56	58	60	62	64
0.211 – 0.230 (0.0083 – 0.0091)		06	06	06	08	10	12	14	14	16	16	18	18	20	20	22	22	24	24	26	26	28	28	30	30	32	32	34	34	36	36	38	38	40	40	42	42	44	44	46	46	48	48	50	50	52	52	54	56	58	60	62	64	66
0.231 – 0.249 (0.0091 – 0.0098)	06	06	06	08	10	12	14	16	16	18	18	20	20	22	22	24	24	26	26	28	28	30	30	32	32	34	34	36	36	38	38	40	40	42	42	44	44	46	46	48	48	50	50	52	52	54	54	56	58	60	62	64	66	68
0.250 – 0.350 (0.0098 – 0.0138)																																																										
0.351 – 0.370 (0.0138 – 0.0146)	12	14	16	18	20	22	24	26	28	28	30	30	32	32	34	34	36	36	38	38	40	40	42	42	44	44	46	46	48	48	50	50	52	52	54	54	56	56	58	58	60	60	62	62	64	64	66	66	68	70	72	74	74	74
0.371 – 0.390 (0.0146 – 0.0154)	14	16	18	20	22	24	26	28	30	30	32	32	34	34	36	36	38	38	40	40	42	42	44	44	46	46	48	48	50	50	52	52	54	54	56	56	58	58	60	60	62	62	64	64	66	66	68	68	70	72	74	74	74	
0.391 – 0.410 (0.0154 – 0.0161)	16	18	20	22	24	26	28	30	32	32	34	34	36	36	38	38	40	40	42	42	44	44	46	46	48	48	50	50	52	52	54	54	56	56	58	58	60	60	62	62	64	64	66	66	68	68	70	70	72	74	74	74		
0.411 – 0.430 (0.0162 – 0.0169)	18	20	22	24	26	28	30	32	34	34	36	36	38	38	40	40	42	42	44	44	46	46	48	48	50	50	52	52	54	54	56	56	58	58	60	60	62	62	64	64	66	66	68	68	70	70	72	72	74	74	74			
0.431 – 0.450 (0.0170 – 0.0177)	20	22	24	26	28	30	32	34	36	36	38	38	40	40	42	42	44	44	46	46	48	48	50	50	52	52	54	54	56	56	58	58	60	60	62	62	64	64	66	68	68	70	70	72	72	74	74	74	74	74				
0.451 – 0.470 (0.0178 – 0.0185)	22	24	26	28	30	32	34	36	38	38	40	40	42	42	44	44	46	46	48	48	50	50	52	52	54	54	56	56	58	58	60	60	62	62	64	64	66	66	68	68	70	70	72	72	74	74	74	74	74					
0.471 – 0.490 (0.0185 – 0.0193)	24	26	28	30	32	34	36	38	40	40	42	42	44	44	46	46	48	48	50	50	52	52	54	54	56	56	58	58	60	60	62	62	64	64	66	66	68	68	70	70	72	72	74	74	74	74	74	74						
0.491 – 0.510 (0.0193 – 0.0201)	26	28	30	32	34	36	38	40	42	42	44	44	46	46	48	48	50	50	52	52	54	54	56	56	58	58	60	60	62	62	64	64	66	66	68	68	70	70	72	72	74	74	74	74	74	74	74							
0.511 – 0.530 (0.0201 – 0.0209)	28	30	32	34	36	38	40	42	44	44	46	46	48	48	50	50	52	52	54	54	56	56	58	58	60	60	62	62	64	64	66	66	68	68	70	70	72	72	74	74	74	74	74	74	74									
0.531 – 0.550 (0.0209 – 0.0217)	30	32	34	36	38	40	42	44	46	46	48	48	50	50	52	52	54	54	56	56	58	58	60	60	62	62	64	64	66	66	68	68	70	70	72	72	74	74	74	74	74	74	74											
0.551 – 0.570 (0.0217 – 0.0224)	32	34	36	38	40	42	44	46	48	48	50	50	52	52	54	54	56	56	58	58	60	60	62	62	64	64	66	66	68	68	70	70	72	72	74	74	74	74	74	74														
0.571 – 0.590 (0.0225 – 0.0232)	34	36	38	40	42	44	46	48	50	50	52	52	54	54	56	56	58	58	60	60	62	62	64	64	66	66	68	68	70	70	72	72	74	74	74	74	74	74																
0.591 – 0.610 (0.0233 – 0.0240)	36	38	40	42	44	46	48	50	52	52	54	54	56	56	58	58	60	60	62	62	64	64	66	66	68	68	70	70	72	72	74	74	74	74	74	74																		
0.611 – 0.630 (0.0241 – 0.0248)	38	40	42	44	46	48	50	52	54	54	56	56	58	58	60	60	62	62	64	64	66	66	68	68	70	70	72	72	74	74	74	74	74	74																				
0.631 – 0.650 (0.0248 – 0.0256)	40	42	44	46	48	50	52	54	56	56	58	58	60	60	62	62	64	64	66	66	68	68	70	70	72	72	74	74	74	74	74	74																						
0.651 – 0.670 (0.0256 – 0.0264)	42	44	46	48	50	52	54	56	58	58	60	60	62	62	64	64	66	66	68	68	70	70	72	72	74	74	74	74	74	74																							
0.671 – 0.690 (0.0264 – 0.0272)	44	46	48	50	52	54	56	58	60	60	62	62	64	64	66	66	68	68	70	70	72	72	74	74	74	74	74	74																							
0.691 – 0.710 (0.0272 – 0.0280)	46	48	50	52	54	56	58	60	62	62	64	64	66	66	68	68	70	70	72	72	74	74	74	74	74	74																							
0.711 – 0.730 (0.0280 – 0.0287)	48	50	52	54	56	58	60	62	64	64	66	66	68	68	70	70	72	72	74	74	74	74	74	74																							
0.731 – 0.750 (0.0288 – 0.0295)	50	52	54	56	58	60	62	64	66	66	68	68	70	70	72	72	74	74	74	74	74	74																							
0.751 – 0.770 (0.0296 – 0.0303)	52	54	56	58	60	62	64	66	68	68	70	70	72	72	74	74	74	74	74	74																							
0.771 – 0.790 (0.0304 – 0.0311)	54	56	58	60	62	64	66	68	70	70	72	72	74	74	74	74	74	74																									
0.791 – 0.810 (0.0311 – 0.0319)	56	58	60	62	64	66	68	70	72	72	74	74	74	74	74	74																									
0.811 – 0.830 (0.0319 – 0.0327)	58	60	62	64	66	68	70	72	74	74	74	74	74	74																									
0.831 – 0.850 (0.0327 – 0.0335)	60	62	64	66	68	70	72	74	74	74	74	74																											
0.851 – 0.870 (0.0335 – 0.0343)	62	64	66	68	70	72	74	74	74	74																											
0.871 – 0.890 (0.0343 – 0.0350)	64	66	68	70	72	74	74	74																													
0.891 – 0.910 (0.0351 – 0.0358)	66	68	70	72	74	74	74																														
0.911 – 0.930 (0.0359 – 0.0366)	68	70	72	74	74	74																															
0.931 – 0.950 (0.0367 – 0.0374)	70	72	74	74	74																																
0.951 – 0.970 (0.0374 – 0.0382)	72	74	74	74																																	
0.971 – 0.990 (0.0382 – 0.0390)	74	74	74																																		
0.991 – 1.010 (0.0390 – 0.0398)	74	74																																			
1.011 – 1.030 (0.0398 – 0.0406)	74																																				

Exhaust valve clearance (Cold):
0.25 - 0.35 mm (0.010 - 0.014 in.)

EXAMPLE: The 5.340 mm (0.2102 in.) lifter is installed, and the measured clearance is 0.440 mm (0.0173 in.).
Replace the 5.340 mm (0.2102 in.) lifter with a new No. 48 lifter.

New lifter thickness mm (in.)

Lifter No.	Thickness	Lifter No.	Thickness	Lifter No.	Thickness
06	5.060 (0.1992)	30	5.300 (0.2087)	54	5.540 (0.2181)
08	5.080 (0.2000)	32	5.320 (0.2094)	56	5.560 (0.2189)
10	5.100 (0.2008)	34	5.340 (0.2102)	58	5.580 (0.2197)
12	5.120 (0.2016)	36	5.360 (0.2110)	60	5.600 (0.2205)
14	5.140 (0.2024)	38	5.380 (0.2118)	62	5.620 (0.2213)
16	5.160 (0.2031)	40	5.400 (0.2126)	64	5.640 (0.2220)
18	5.180 (0.2039)	42	5.420 (0.2134)	66	5.660 (0.2228)
20	5.200 (0.2047)	44	5.440 (0.2142)	68	5.680 (0.2236)
22	5.220 (0.2055)	46	5.460 (0.2150)	70	5.700 (0.2244)
24	5.240 (0.2063)	48	5.480 (0.2157)	72	5.720 (0.2252)
26	5.260 (0.2071)	50	5.500 (0.2165)	74	5.740 (0.2260)
28	5.280 (0.2079)	52	5.520 (0.2173)		

(p) Reinstall the valve lifters (See page EM-42).
(q) Align the crankshaft pulley groove with the timing mark ”0” of the timing chain cover.
(r) Hold the timing chain, and place the exhaust camshaft and timing sprocket assembly.
(s) Align the matchmarks on the timing chain and camshaft timing sprocket.

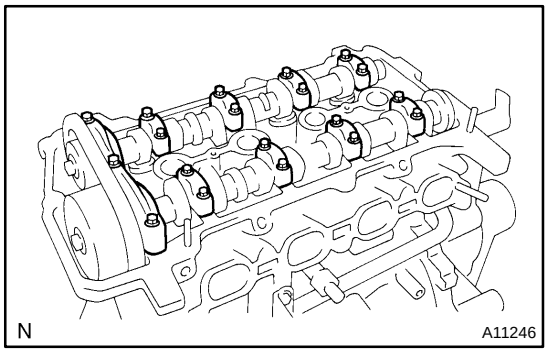

(t) Reinstall the intake camshaft, valve timing controller assembly and camshaft bearing caps (See page EM-44).
(u) Remove the bar from the timing chain tensioner.

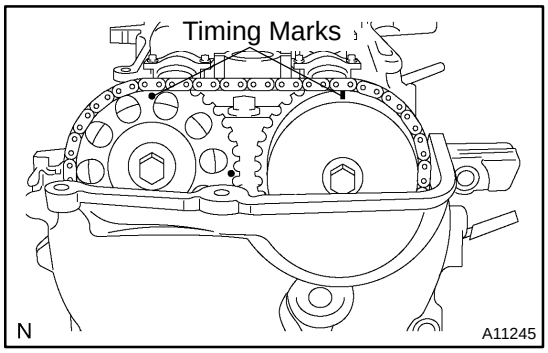

(v) Check that both timing marks on the camshaft timing sprocket and valve timing controller assembly are facing right upas shown in the illustration.

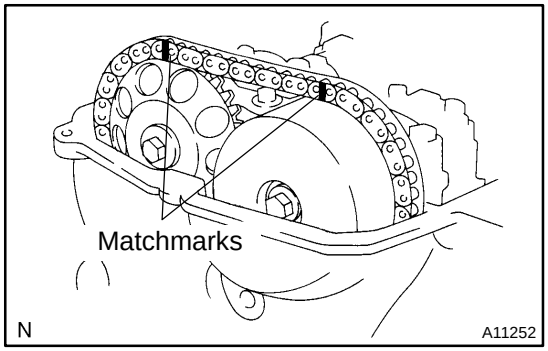

(w) Check that the matchmarks on the timing chain and camshaft timing sprockets.
(x) Install a new plug to the timing chain cover.
Torque: 15 N·m (150 kgf·cm, 11 ft·lbf)
(y) Recheck the valve clearance (See procedure in step 3).
(z) Check the valve timing (See page EM-18).

5. REINSTALL CYLINDER HEAD COVER
(See page EM-20)

CAMSHAFT POSITION SENSOR

IG0BR-04

COMPONENTS

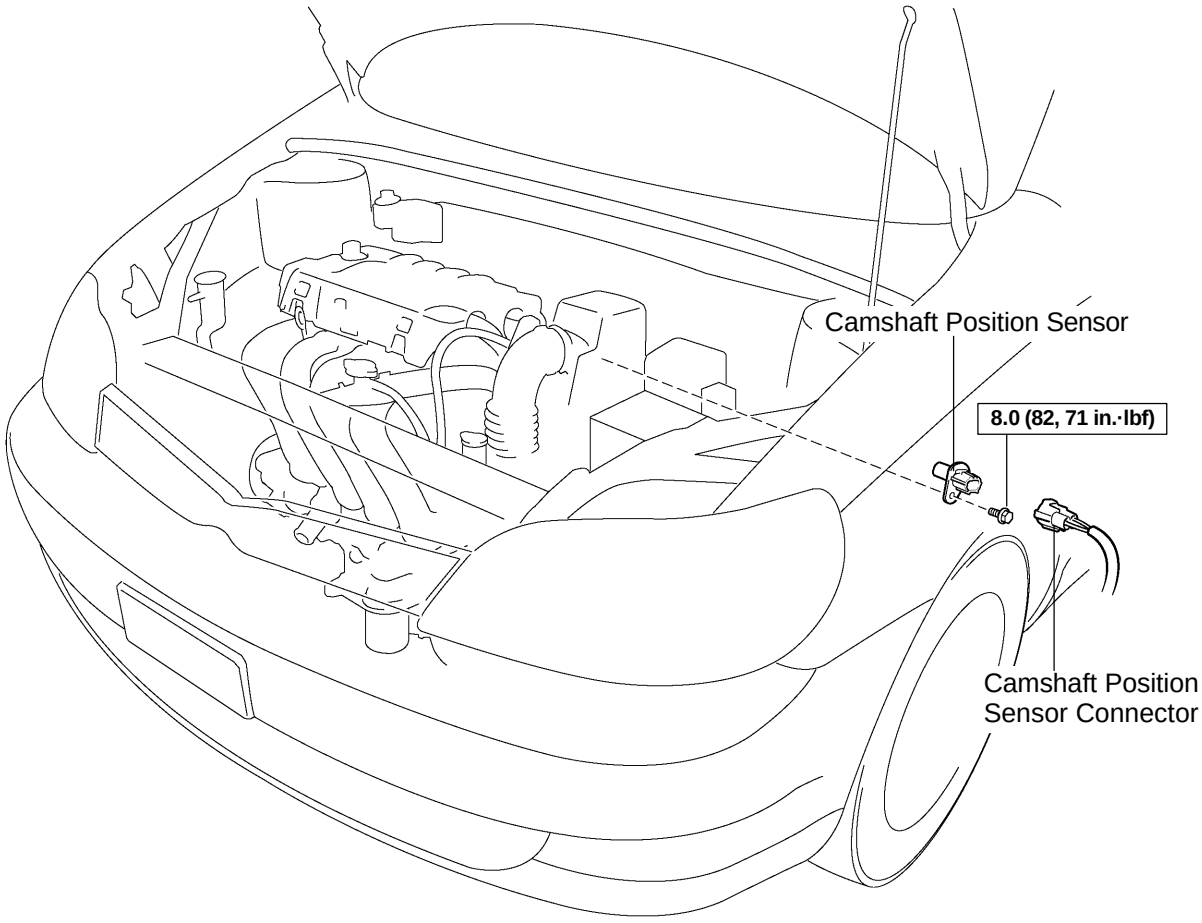

N·m (kgf·cm, ft·lbf) : Specified torque

N

B09364

IG0EQ-01

INSTALLATION

Installation is in the reverse order of removal (See page IG-9).

IG0BS-03

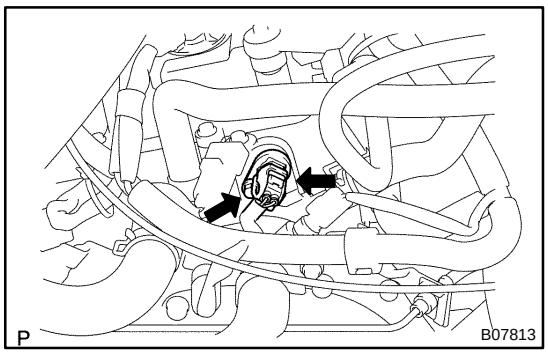

REMOVAL

REMOVE CAMSHAFT POSITION SENSOR

(a) Disconnect the connector.

(b) Remove the bolt and camshaft position sensor.
Torque: 8.0 N·m (82 kgf·cm, 71 in.·lbf)

CRANKSHAFT POSITION SENSOR

IG0BU-03

COMPONENTS

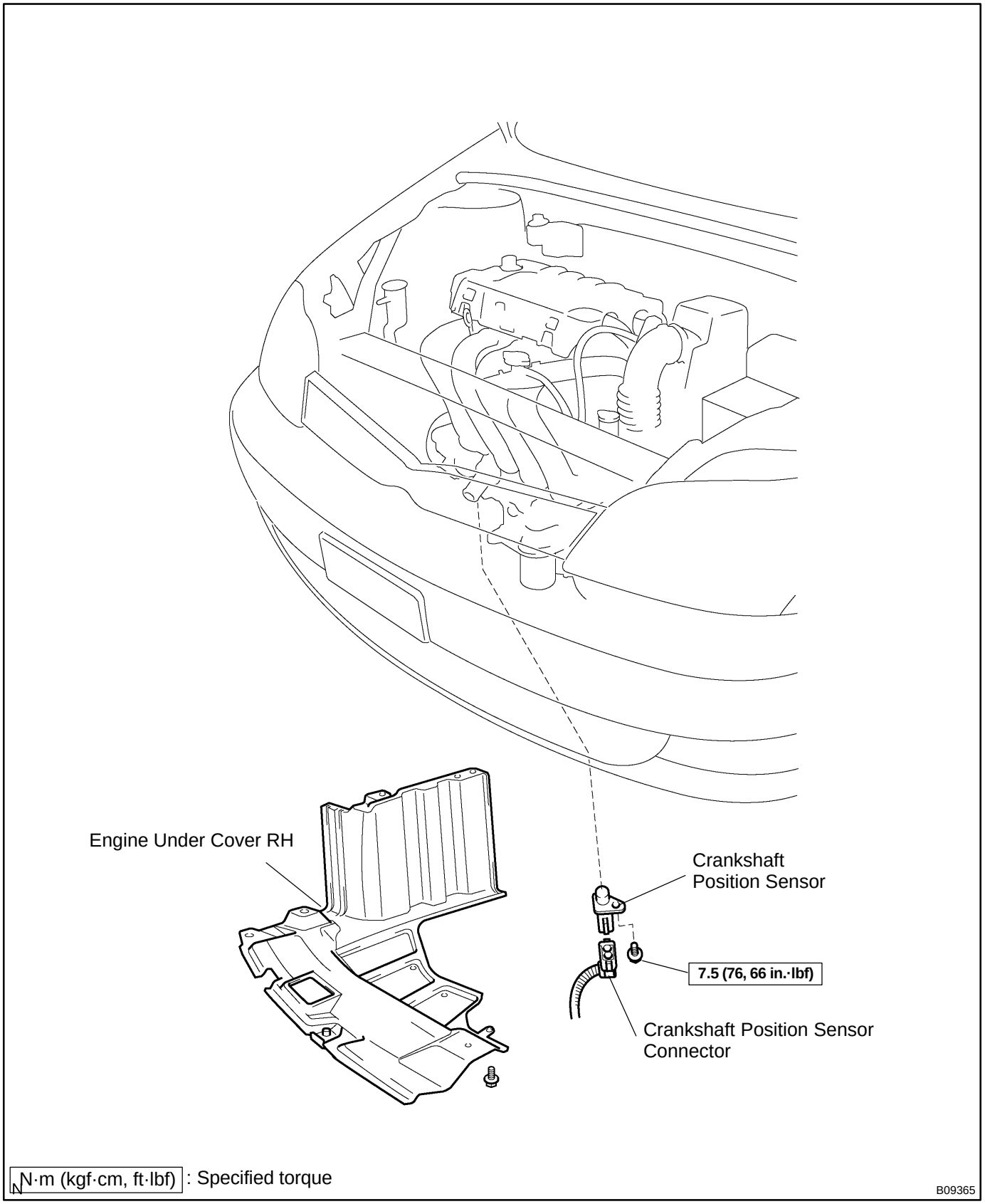

N·m (kgf·cm, ft·lbf) : Specified torque

B09365

IG0BW-02

INSTALLATION

Installation is in the reverse order of removal (See page IG-12).

IG0BV-03

REMOVAL

1. REMOVE ENGINE UNDER COVER RH

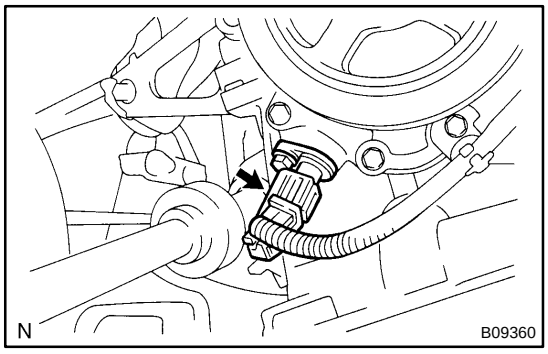

2. REMOVE CRANKSHAFT POSITION SENSOR

(a) While sliding the connector lock, remove the connector.

(b) Remove the bolt and crankshaft position sensor.
Torque: 7.5 N·m (76 kgf·cm, 66 in.·lbf)

IGNITION COIL

COMPONENTS

IG0BO-04

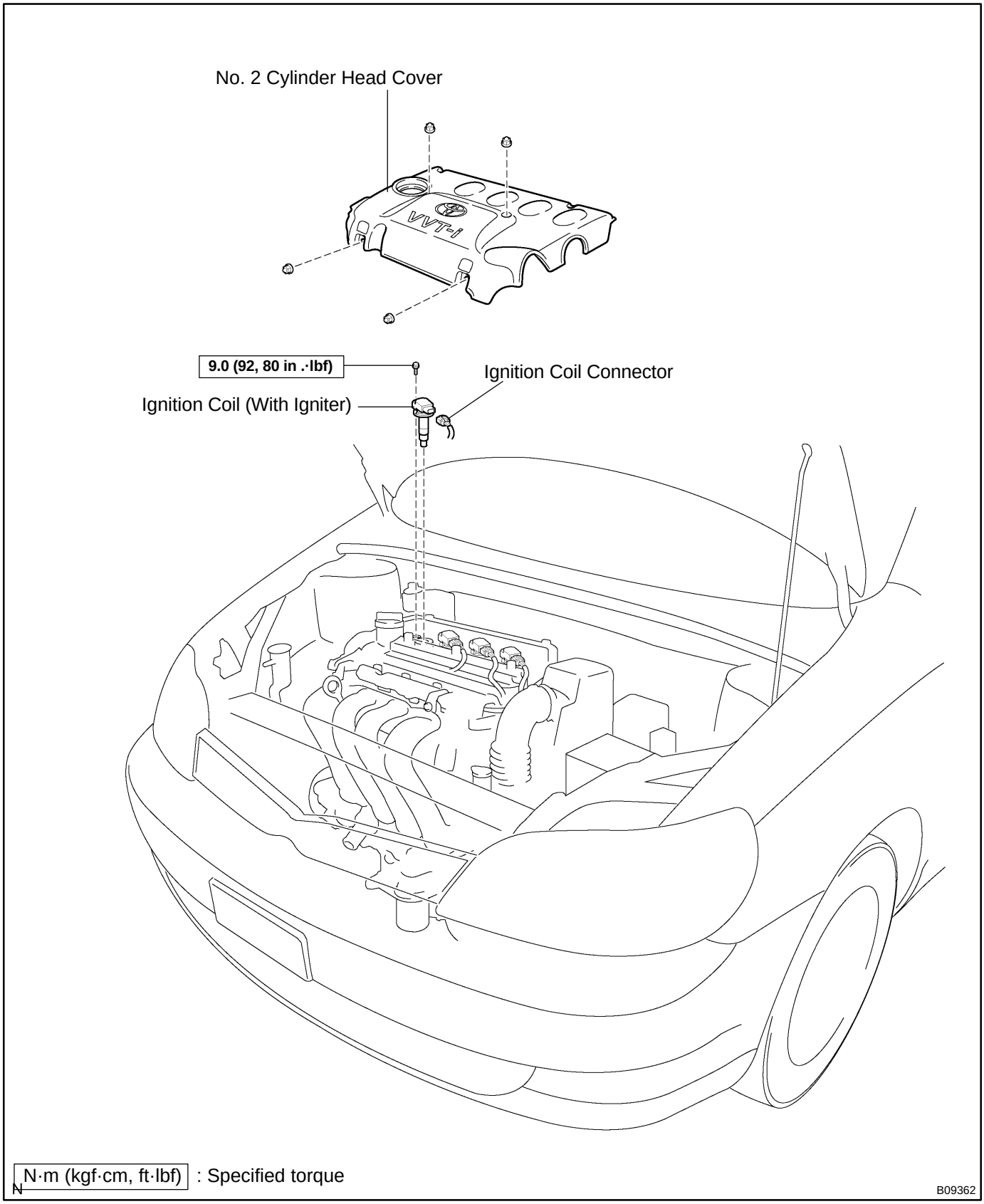

IG0BQ-02

INSTALLATION

Installation is in the reverse order of removal (See page IG-6).

IG0BP-04

REMOVAL

1. REMOVE NO. 2 CYLINDER HEAD COVER

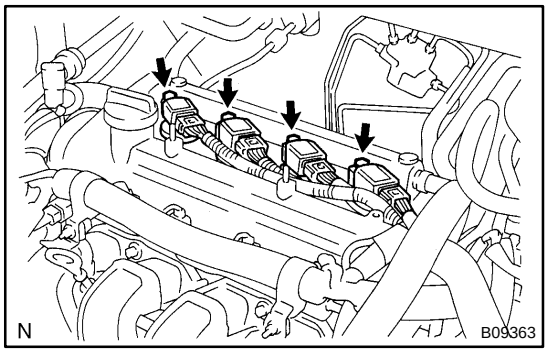

2. DISCONNECT 4 IGNITION COIL CONNECTORS

3. REMOVE IGNITION COILS (WITH IGNITER) FROM SPARK PLUGS

Remove the 4 bolts and pull out the 4 ignition coils (with igniter).

Torque: 9.0 N·m (92 kgf·cm, 80 in.·lbf)

IGNITION SYSTEM

IG0EP-03

ON-VEHICLE INSPECTION

NOTICE:

"Cold" and "Hot" in these sentences express the temperature of the coils themselves. "Cold" is from -10˚C (14˚F) to 50˚C (122˚F) and "Hot" is from 50˚C (122˚F) to 100˚C (212˚F).

1. INSPECT IGNITION COIL (WITH IGNITER) AND SPARK TEST

Check that the spark occurs.

(1) Remove the ignition coils (with igniter).
(See page IG-6)

(2) Using a 16 mm (0.63 in.) plug wrench, remove the spark plugs.

(3) Install the spark plugs to each ignition coils (with igniter), and connect the ignition coil connectors.

(4) Disconnect the 4 injector connectors.

(5) Ground the spark plugs.

(6) Check if spark occurs while engine is being cranked.

NOTICE:

To prevent gasoline from being injected from injectors during this test, crank the engine for no more than 5 - 10 seconds at time.

If the spark does not occur, do the test as follows:

SPARK TEST

NO

CHECK CONNECTION OF IGNITION COIL CONNECTOR → BAD → Connect securely.

OK

CHANGE IT TO NORMAL IGNITION COIL (WITH IGNITER) AND PERFORM SPARK TEST AGAIN → OK → Replace the ignition coil (with igniter).

NO

CHECK POWER SUPPLY TO IGNITION COIL (WITH IGNITER)
1. Turn ignition switch to ON.
2. Check that there is battery voltage at ignition coil positive (+) terminal.

→ BAD → Check wiring between ignition switch to ignition coil (with igniter).

OK

CHECK RESISTANCE OF CAMSHAFT POSITION SENSOR (See step 3)

	Cold	Hot
Resistance:	**1,630 - 2,740 Ω**	**2,065 - 3.225 Ω**

→ BAD → Replace the camshaft position sensor.

OK

CHECK RESISTANCE OF CRANKSHAFT POSITION SENSOR (See step 4)

	Cold	Hot
Resistance:	**985 - 1,600 Ω**	**1,265 - 1,890 Ω**

→ BAD → Replace the crankshaft position sensor.

OK

CHECK IGT SIGNAL FROM ECM (See page DI-1 13)

→ BAD → Check wiring between ECM and ignition coil (with igniter), and then try another ECU.

OK

TRY ANOTHER IGNITION COIL (WITH IGNITER)

(7) Using a 16 mm (0.63 in.) plug wrench, install the spark plugs.

Torque: 18 N·m (184 kgf·cm, 13 ft·lbf)

(8) Install the ignition coils (with igniter).
(See page IG-7)

2. INSPECT SPARK PLUGS

(a) Remove the ignition coils (with igniter).
(See page IG-6)

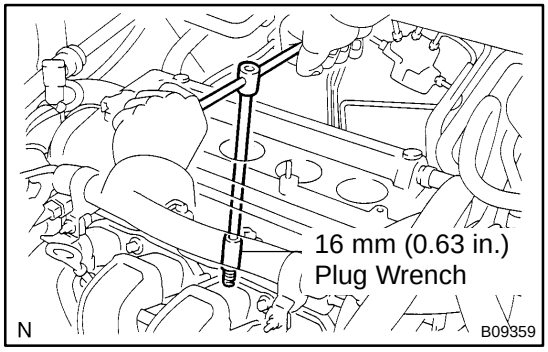

(b) Using a 16 mm (0.63 in.) plug wrench, remove the spark plugs.

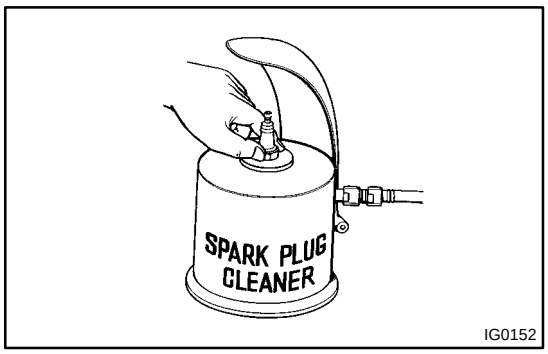

(c) Clean the spark plugs.

If the electrode has traces of wet carbon, allow it to dry and then clean with a spark plug cleaner.

Air pressure: Below 588 kPa (6 kgf/cm^2, 85 psi)

Duration: 20 seconds or less

HINT:

If there are traces of oil, remove it with gasoline before using the spark plug cleaner.

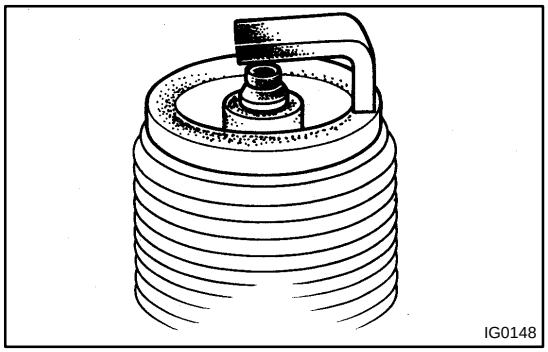

(d) Check the spark plug for thread damage and insulator damage.

If abnormal, replace the spark plug.

Recommended spark plug:

DENSO made	SK16R11
NGK made	IFR5A11

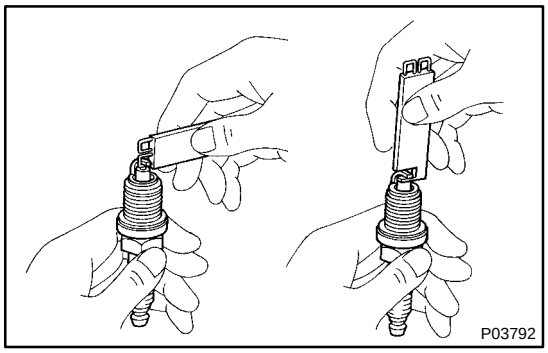

(e) Adjust electrode gap.

Carefully bend the outer electrode to obtain the correct electrode gap.

Electrode gap: 1.1 mm (0.043 in.)

(f) Using a 16 mm (0.63 in.) plug wrench, install the spark plugs.

Torque: 18 N·m (184 kgf·cm, 13 ft·lbf)

(g) Install the ignition coils (with igniter).

(See page IG-7)

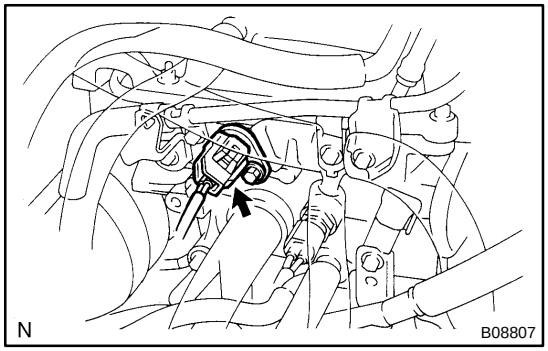

3. INSPECT CAMSHAFT POSITION SENSOR

(a) Disconnect the camshaft position sensor connector.

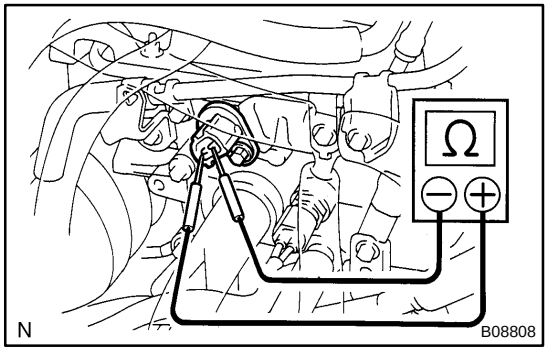

(b) Using an ohmmeter, measure the resistance between terminals.

Resistance:

Cold	1,630 - 2,740 Ω
Hot	2,065 - 3,225 Ω

If the resistance is not as specified, replace the camshaft position sensor.

(c) Connect the camshaft position sensor connector.

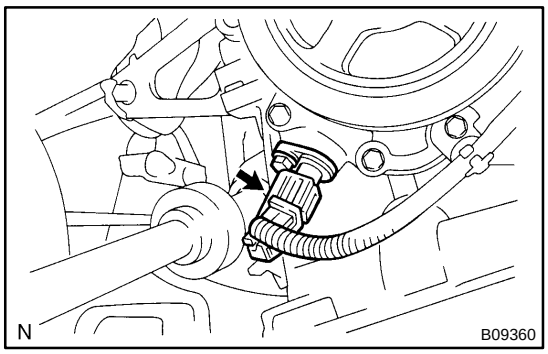

4. INSPECT CRANKSHAFT POSITION SENSOR

(a) Remove the engine under cover RH.

(b) While sliding the connector lock, remove the connector.

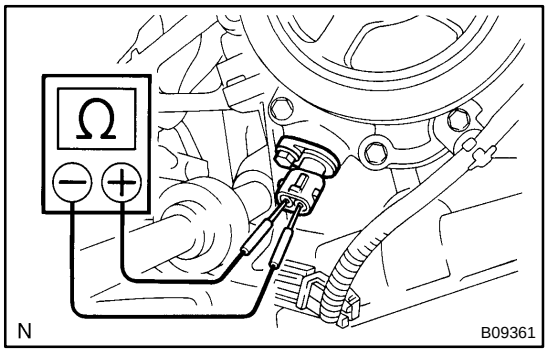

(c) Using an ohmmeter, measure the resistance between the terminals.

Resistance:

Cold	985 - 1,600 Ω
Hot	1,265 - 1,890 Ω

If the resistance is not as specified, replace the crankshaft position sensor.

(d) Install the connector.

(e) Install the engine under cover RH.

FOR ALL OF VEHICLES

PRECAUTION

IN0IC-01

1. FOR VEHICLES EQUIPPED WITH SRS AIRBAG AND SEAT BELT PRETENSIONER

(a) The ECHO is equipped with an SRS (Supplemental Restraint System), such as the driver airbag, front passenger airbag assembly and seat belt pretensioners.
Failure to carry out service operations in the correct sequence could cause the supplemental restraint system to unexpectedly deploy during servicing, possibly leading to a serious accident.
Further, if a mistake is made in servicing the supplemental restraint system, it is possible the SRS may fail to operate when required. Before servicing (including removal or installation of parts, inspection or replacement), be sure to read the following items carefully, then follow the correct procedure described in this manual.

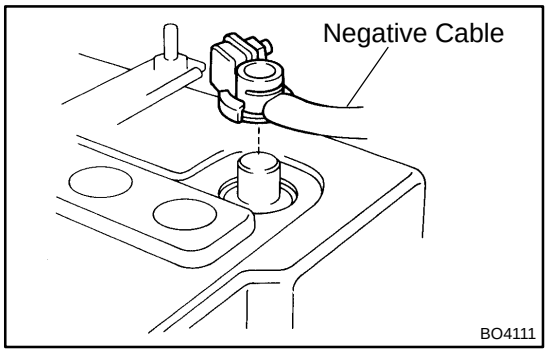

(b) GENERAL NOTICE

(1) Malfunction symptoms of the supplemental restraint system are difficult to confirm, so the diagnostic trouble codes become the most important source of information when troubleshooting. When troubleshooting the supplemental restraint system, always inspect the diagnostic trouble codes before disconnecting the battery (See page DI-239).

(2) Work must be started after 90 seconds from the time the ignition switch is turned to the ”LOCK” position and the negative (-) terminal cable is disconnected from the battery.
(The supplemental restraint system is equipped with a back-up power source so that if work is started within 90 seconds of disconnecting the negative (-) terminal cable from the battery, the SRS may deploy.)
When the negative (-) terminal cable is disconnected from the battery, memory of the clock and audio systems will be cancelled. So before starting work, make a record of the contents memorized by the each memory system. Then when work is finished, reset the clock and audio systems as before.
To avoid erasing the memory of each memory system, never use a back-up power supply from another battery.

(3) Even in cases of a minor collision where the SRS does not deploy, the steering wheel pad, front passenger airbag assembly, front airbag sensor and seat belt pretensioner should be inspected (See page RS-15 , RS-29 , RS-58 and BO-1 17).
(4) Never use SRS parts from another vehicle. When replacing parts, replace them with new parts.
(5) Before repairs, remove the airbag sensor if shocks are likely to be applied to the sensor during repairs.
(6) Never disassemble and repair the airbag sensor assembly, steering wheel pad, front passenger airbag assembly, front airbag sensor or seat belt pretensioner.
(7) If the airbag sensor assembly, steering wheel pad, front passenger airbag assembly, front airbag sensor or seat belt pretensioner has been dropped, or if there are cracks, dents or other defects in the case, bracket or connector, replace them with new ones.
(8) Do not directly expose the airbag sensor assembly, steering wheel pad, front passenger airbag assembly, front airbag sensor or seat belt pretensioner to hot air or flames.
(9) Use a volt/ohmmeter with high impedance (10 kΩ/V minimum) for troubleshooting of the electrical circuit.
(10) Information labels are attached to the periphery of the SRS components. Follow the instructions on the notices.
(11) After work on the supplemental restraint system is completed, check the SRS warning light (See page DI-239).

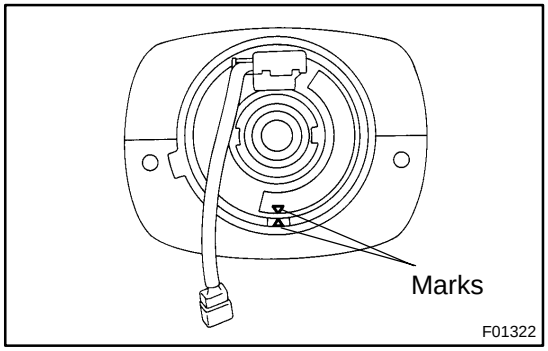

(c) SPIRAL CABLE (in Combination Switch)
The steering wheel must be fitted correctly to the steering column with the spiral cable at the neutral position, otherwise cable disconnection and other troubles may result. Refer to SR-20 of this manual concerning correct steering wheel installation.

(d) STEERING WHEEL PAD (with Airbag)

(1) When removing the steering wheel pad or handling a new steering wheel pad, it should be placed with the pad top surface facing up.
Storing the pad with its metallic surface facing upward may lead to a serious accident if the airbag deploys for some reason. In addition do not store a steering wheel pad on top of another one.

(2) Never measure the resistance of the airbag squib. (This may cause the airbag to deploy, which is very dangerous.)

(3) Grease should not be applied to the steering wheel pad and the pad should not be cleaned with detergents of any kind.

(4) Store the steering wheel pad where the ambient temperature remains below 93˚C (200˚F), without high humidity and away from electrical noise.

(5) When using electric welding, first disconnect the airbag connector (yellow color and 2 pins) under the steering column near the combination switch connector before starting work.

(6) When disposing of a vehicle or the steering wheel pad alone, the airbag should be deployed using an SST before disposal (See page RS-17).
Carry out the operation in a safe place away from electrical noise.

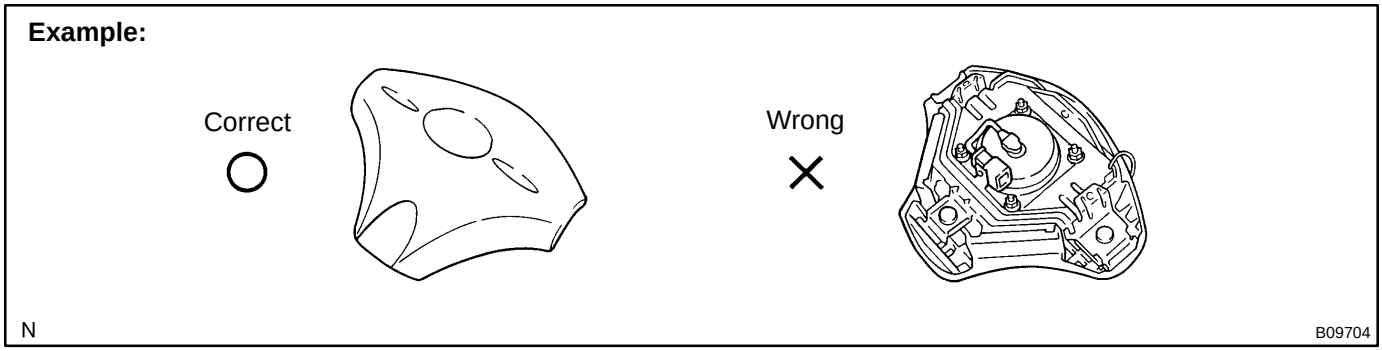

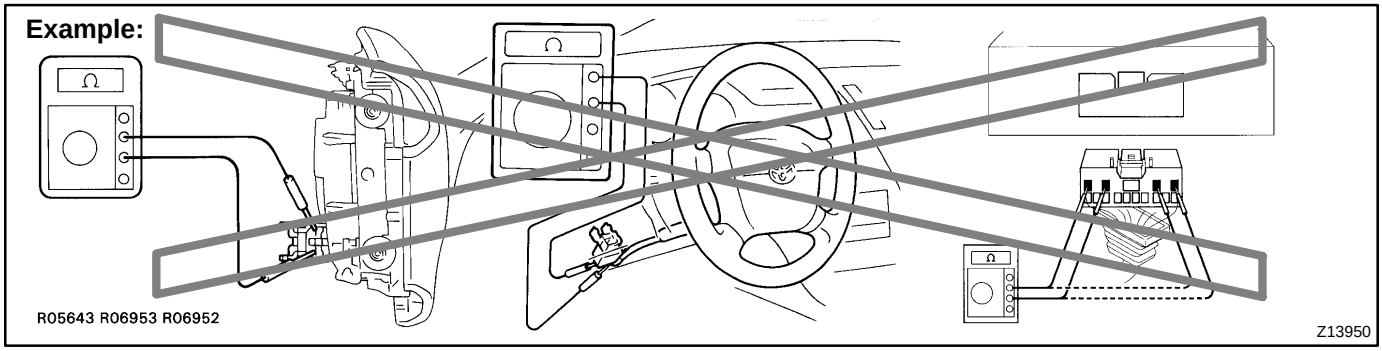

(e) FRONT PASSENGER AIRBAG ASSEMBLY

(1) Always store a removed or new front passenger airbag assembly with the airbag deployment direction facing up.
Storing the airbag assembly with the airbag deployment direction facing down could cause a serious accident if the airbag deploys.

(2) Never measure the resistance of the airbag squib. (This may cause the airbag to deploy, which is very dangerous.)

(3) Grease should not be applied to the front passenger airbag assembly and the airbag door should not be cleaned with detergents of any kind.

(4) Store the airbag assembly where the ambient temperature remains below 93˚C (200˚F), without high humidity and away from electrical noise.

(5) When using electric welding, first disconnect the airbag connector (yellow color and 2 pins) installed on the assembly before starting work.

(6) When disposing of a vehicle or the front passenger airbag assembly alone, the airbag should be deployed using an SST before disposal (See page RS-30).
Perform the operation in a safe place away from electrical noise.

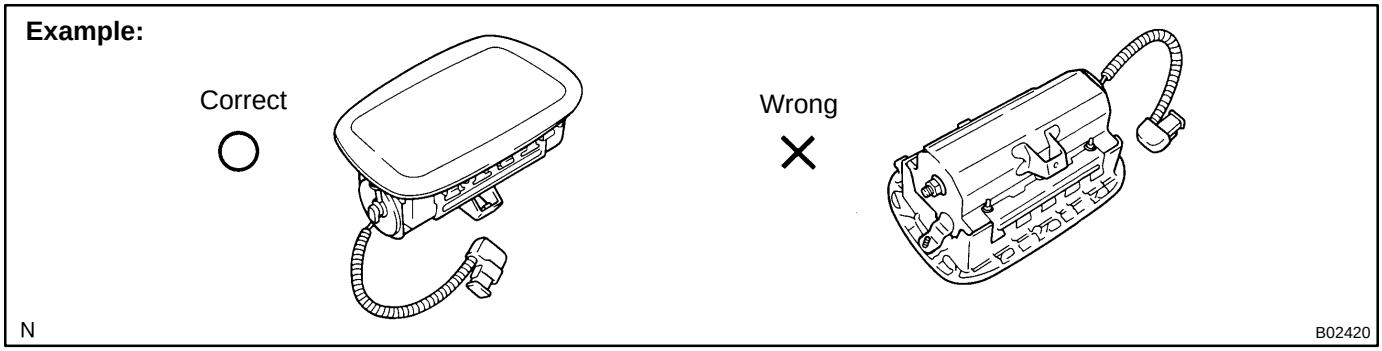

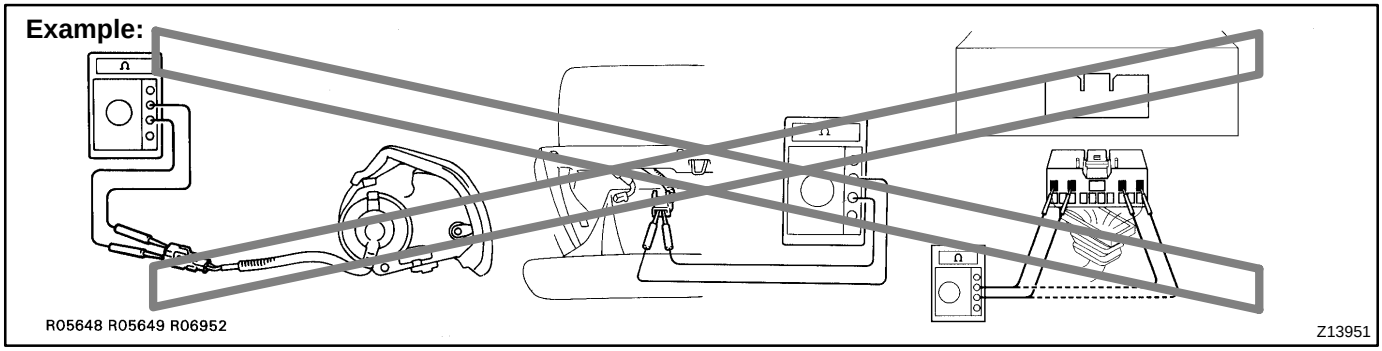

(f) SIDE AIRBAG ASSEMBLY

(1) Always store a removed or new side airbag assembly with the airbag deployment direction facing up. Storing the airbag assembly with the airbag deployment direction facing down could cause a serious accident if the airbag inflates.

(2) Never measure the resistance of the airbag squib. (This may cause the airbag to deploy, which is very dangerous.)

(3) Grease should not be applied to the side airbag assembly and the surface should not be cleaned with detergents of any kind.

(4) Store the airbag assembly where the ambient temperature remains below 93˚C (200˚F), without high humidity and away from electrical noise.

(5) When using electric welding, first disconnect the airbag connector (yellow color and 2 pins) under the seat before starting work.

(6) When disposing of a vehicle or the side airbag assembly alone, the airbag should be deployed using an SST before disposal (See page RS-42). Perform the operation in a safe place away from electrical noise.

Example:

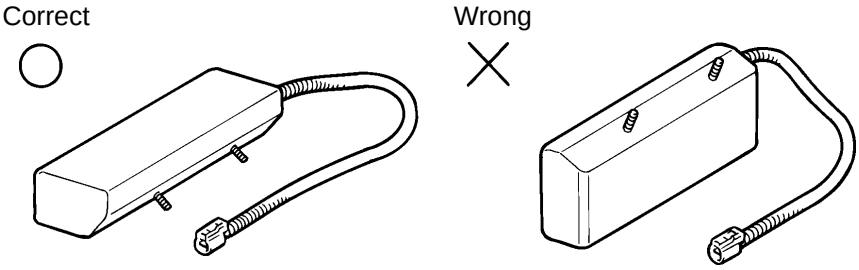

B01545

Example:

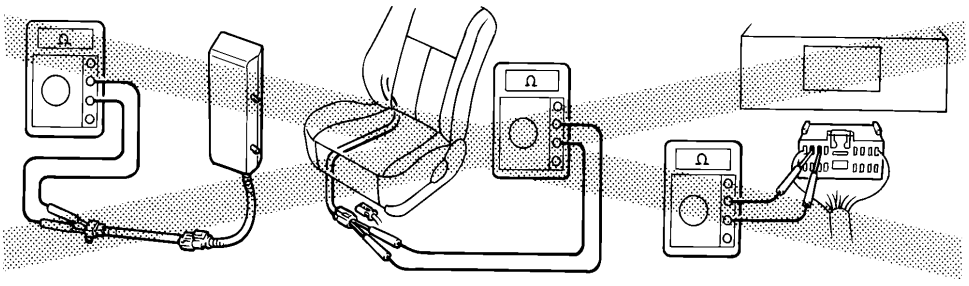

B01546

(g) SEAT BELT PRETENSIONER

(1) Never measure the resistance of the seat belt pretensioner. (This may cause the seat belt pretensioner to activate, which is very dangerous.)

(2) Never disassemble the seat belt pretensioner.

(3) Never install the seat belt pretensioner in another vehicle.

(4) Store the seat belt pretensioner where the ambient temperature remains below 80°C (176°F) and away from electrical noise without high humidity.

(5) When using electric welding, first disconnect the connector (yellow color and 2 pins) before starting work.

(6) When disposing of a vehicle or the seat belt pretensioner alone, the seat belt pretensioner should be activated before disposal (See page BO-1 19). Perform the operation in a safe place away from electrical noise.

(7) The seat belt pretensioner is hot after activation, so let it cool down sufficiently before the disposal. However never apply water to the seat belt pretensioner.

(8) Oil or water should not be put on the front seat outer belt and the front seat outer belt should not be cleaned with detergents of any kind.

Example:

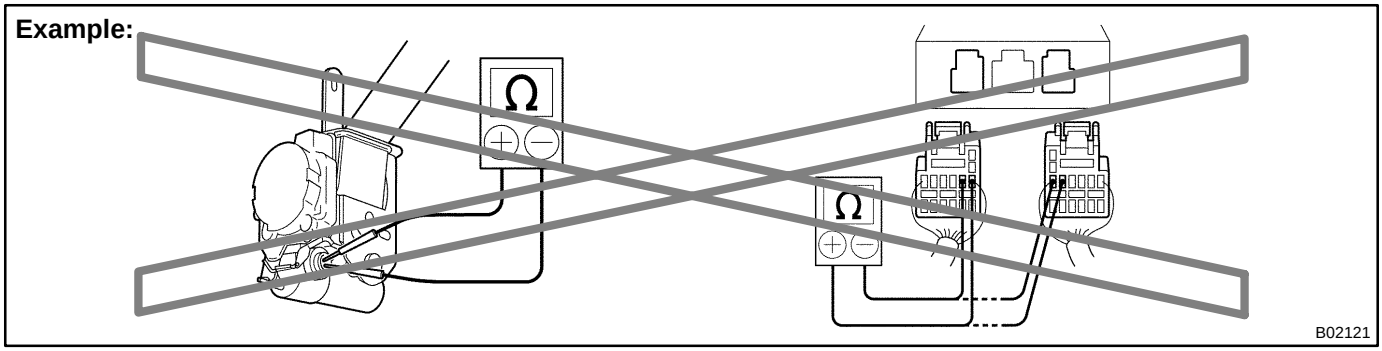

(h) AIRBAG SENSOR ASSEMBLY

(1) Never reuse the airbag sensor assembly involved in a collision when the SRS has deployed.

(2) The connectors to the airbag sensor assembly should be connected or disconnected with the sensor mounted on the floor. If the connectors are connected or disconnected while the airbag sensor assembly is not mounted to the floor, it could cause undesired ignition of the supplemental restraint system.

(3) Work must be started after 90 seconds from the time the ignition switch is turned to the ”LOCK” position and the negative (-) terminal cable is disconnected from the battery, even if only loosing the set bolts of the airbag sensor assembly.

(i) WIRE HARNESS AND CONNECTOR

The SRS wire harness is integrated with the instrument panel wire harness assembly. All the connectors in the system are a standard yellow color. If the SRS wire harness becomes disconnected or the connector becomes broken due to an accident, etc., repair or replace it as shown on page RS-77 .

2. FOR VEHICLES EQUIPPED WITH A CATALYTIC CONVERTER

CAUTION:

If large amount of unburned gasoline flows into the converter, it may overheat and create a fire hazard. To prevent this, observe the following precautions and explain them to your customer.

(a) Use only unleaded gasoline.

(b) Avoid prolonged idling.
Avoid running the engine at idle speed for more than 20 minutes.

(c) Avoid spark jump test.

(1) Perform spark jump test only when absolutely necessary. Perform this test as rapidly as possible.

(2) While testing, never race the engine.

(d) Avoid prolonged engine compression measurement.
Engine compression tests must be done as rapidly as possible.

(e) Do not run engine when fuel tank is nearly empty.
This may cause the engine to misfire and create an extra load on the converter.

(f) Avoid coasting with ignition turned off.

(g) Do not dispose of used catalyst along with parts contaminated with gasoline or oil.

3. IF VEHICLE IS EQUIPPED WITH MOBILE COMMUNICATION SYSTEM

For vehicles with mobile communication systems such as two-way radios and cellular telephones, observe the following precautions.

(1) Install the antenna as far as possible away from the ECU and sensors of the vehicle's electronic system.
(2) Install the antenna feeder at least 20 cm (7.87 in.) away from the ECU and sensors of the vehicle's electronic systems. For details about ECU and sensors locations, refer to the section on the applicable component.
(3) Avoid winding the antenna feeder together with other wiring as much as possible, and also avoid running the antenna feeder parallel with other wire harnesses.
(4) Check that the antenna and feeder are correctly adjusted.
(5) Do not install powerful mobile communications system.

4. FOR USING OBD II SCAN TOOL OR TOYOTA HAND-HELD TESTER

CAUTION:

Observe the following items for safety reasons:

- **Before using the OBD II scan tool or TOYOTA hand-held tester, the OBD II scan tool's instruction book or TOYOTA hand-held tester's operator manual should be read thoroughly.**
- **Be sure to route all cables securely when driving with the OBD II scan tool or TOYOTA hand-held tester connected to the vehicle. (i.e. Keep cables away from feet, pedals, steering wheel and shift lever.)**
- **Two persons are required when test driving with the OBD II scan tool or TOYOTA hand-held tester, one person to drive the vehicle and the other person to operate the OBD II scan tool or TOYOTA hand-held tester.**

HOW TO TROUBLESHOOT ECU CONTROLLED SYSTEMS

IN05Y-19

GENERAL INFORMATION

A large number of ECU controlled systems are used in the ECHO. In general, the ECU controlled system is considered to be a very intricate system requiring a high level of technical knowledge and expert skill to troubleshoot. However, the fact is that if you proceed to inspect the circuits one by one, troubleshooting of these systems is not complex. If you have adequate understanding of the system and a basic knowledge of electricity, accurate diagnosis and necessary repair can be performed to locate and fix the problem. This manual is designed through emphasis of the above standpoint to help service technicians perform accurate and effective troubleshooting, and is compiled for the following major ECU controlled systems:
The troubleshooting procedure and how to make use of it are described on the following pages.

System	Page
1. Engine	DI-1
2. Automatic Transaxle	DI-147
3. Anti-Lock Brake System	DI-199
4. Supplemental Restraint System	DI-237
5. Theft Deterrent System	DI-402

FOR USING OBD II SCAN TOOL OR TOYOTA HAND-HELD TESTER

- Before using the scan tool or tester, the scan tool's instruction book or tester's operator manual should be read thoroughly.
- If the scan tool or tester cannot communicate with ECU controlled systems when you have connected the cable of the scan tool or tester to DLC3, turned the ignition switch ON and operated the scan tool, there is a problem on the vehicle side or tool side.
  (1) If communication is normal when the tool is connected to another vehicle, inspect the diagnosis data link line (Bus⊕line) or ECU power circuit of the vehicle.
  (2) If communication is still not possible when the tool is connected to another vehicle, the problem is probably in the tool itself, so perform the Self Test procedures outline in the Tester Operator's Manual.

IN05W-21

HOW TO PROCEED WITH TROUBLESHOOTING

Carry out troubleshooting in accordance with the procedure on the following page. Here, only the basic procedure is shown. Details are provided in Diagnostics section, showing the most effective methods for each circuit. Confirm the troubleshooting procedures first for the relevant circuit before beginning troubleshooting of that circuit.

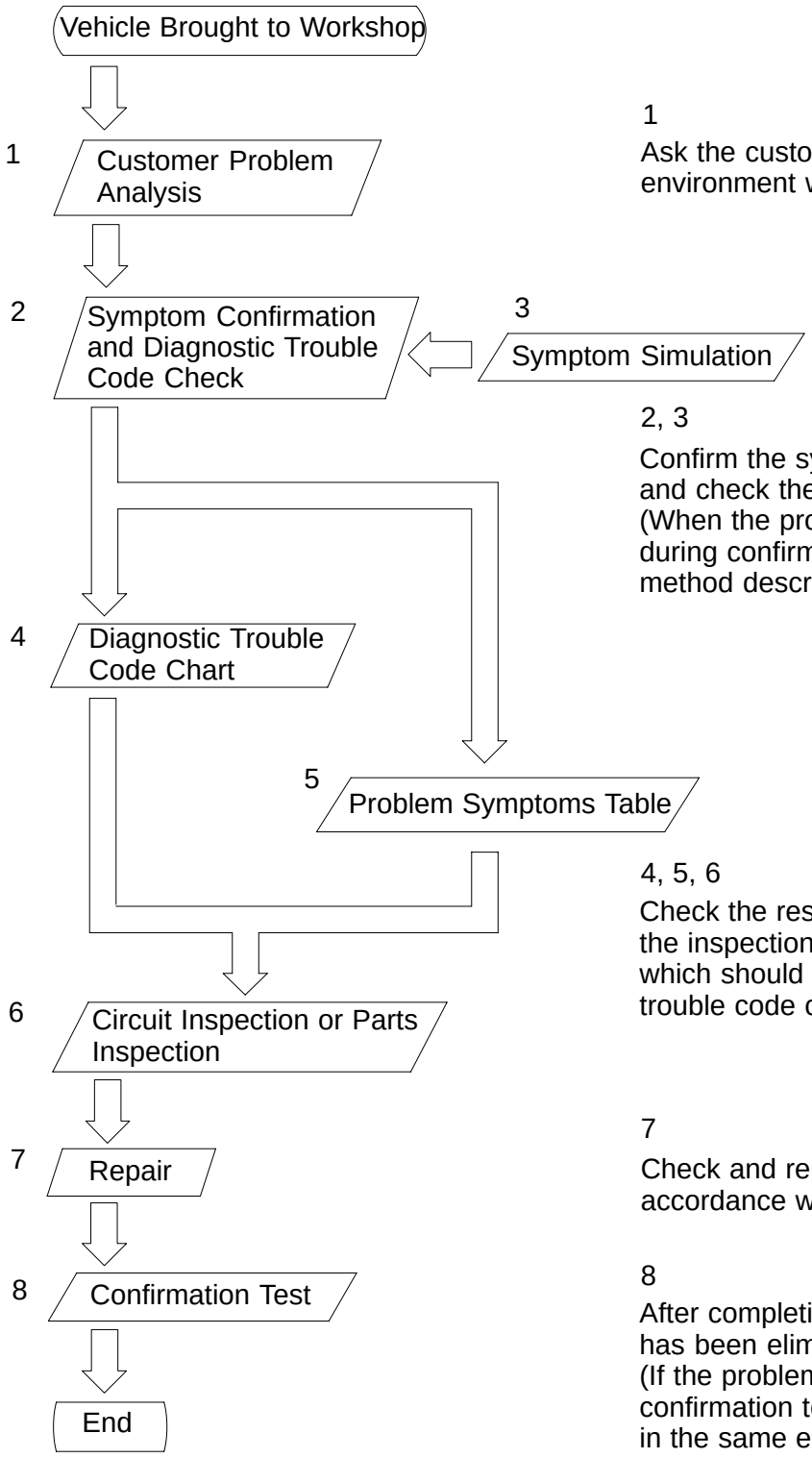

1

Ask the customer about the conditions and the environment when the problem occurred.

2, 3

Confirm the symptoms and the problem conditions, and check the diagnostic trouble codes.
(When the problem symptoms do not appear during confirmation, use the symptom simulation method described later on.)

4, 5, 6

Check the results obtained in Step 2, then confirm the inspection procedure for the system or the part which should be checked using the diagnostic trouble code chart or the problem symptoms table.

7

Check and repair the affected system or part in accordance with the instructions in Step 6.

8

After completing repairs, confirm that the problem has been eliminated.
(If the problem is not reproduced, perform the confirmation test under the same conditions and in the same environment as when it occurred for the first time.)

1. CUSTOMER PROBLEM ANALYSIS

In troubleshooting, the problem symptoms must be confirmed accurately and all preconceptions must be cleared away in order to give an accurate judgment. To ascertain just what the problem symptoms are, it is extremely important to ask the customer about the problem and the conditions at the time it occurred.Important Point in the Problem Analysis:

The following 5 items are important points in the problem analysis. Past problems which are thought to be unrelated and the repair history, etc. may also help in some cases, so as much information as possible should be gathered and its relationship with the problem symptoms should be correctly ascertained for reference in troubleshooting. A customer problem analysis table is provided in Diagnostics section for each system for your use.

Important Points in the Customer Problem Analysis

- What ----- Vehicle model, system name
- When ----- Date, time, occurrence frequency
- Where ----- Road conditions
- Under what conditions? ----- Running conditions, driving conditions, weather conditions
- How did it happen? ----- Problem symptoms

(Sample) Engine control system check sheet.

CUSTOMER PROBLEM ANALYSIS CHECK

ENGINE CONTROL SYSTEM Check Sheet

Inspector's Name _____

Customer's Name		**Model and Model Year**	
Driver's Name		**Frame No.**	
Data Vehicle Brought in		**Engine Model**	
License No.		**Odometer Reading**	km miles

Problem Symptoms	☐ **Engine does not Start**	☐ **Engine does not crank** ☐ **No initial combustion** ☐ **No complete combustion**
	☐ **Difficult to Start**	☐ **Engine cranks slowly** ☐ **Other** _____
	☐ **Poor Idling**	☐ **Incorrect first idle** ☐ **Idling rpm is abnormal** ☐ **High (rpm)** ☐ **Low (rpm)** ☐ **Rough idling** ☐ **Other** _____
	☐ **Poor Drive ability**	☐ **Hesitation** ☐ **Back fire** ☐ **Muffler explosion (after-fire)** ☐ **Surging** ☐ **Knocking** ☐ **Other** _____
	☐ **Engine Stall**	☐ **Soon after starting** ☐ **After accelerator pedal depressed** ☐ **After accelerator pedal released** ☐ **During A/C operation** ☐ **Shifting from N to D** ☐ **Other** _____
	☐ **Others**	

☐ **onstant** ☐ **Sometimes (times per day/month)**

2. SYMPTOM CONFIRMATION AND DIAGNOSTIC TROUBLE CODE CHECK

The diagnostic system in the ECHO fulfills various functions. The first function is the Diagnostic Trouble Code Check in which a malfunction in the signal circuits to the ECU is stored in code in the ECU memory at the time of occurrence, to be output by the technician during troubleshooting. Another function is the Input Signal Check which checks if the signals from various switches are sent to the ECU correctly.
By using these check functions, the problem areas can be narrowed down quickly and troubleshooting can be performed effectively. Diagnostic functions are incorporated in the following systems in the ECHO.

System	Diagnostic Trouble Code Check	Input Signal Check (Sensor Check)	Diagnostic Test Mode (Active Test)
Engine	○ (with Check Mode)	○	○
Automatic Transaxle	○ (with Check Mode)	○	
Anti-Lock Brake System	○	○	○
Supplemental Restraint System	○		
Theft Deterrent System	○		

In diagnostic trouble code check, it is very important to determine whether the problem indicated by the diagnostic trouble code is still occurring or occurred in the past but returned to normal at present. In addition, it must be checked in the problem symptom check whether the malfunction indicated by the diagnostic trouble code is directly related to the problem symptom or not. For this reason, the diagnostic trouble codes should be checked before and after the symptom confirmation to determine the current conditions, as shown in the table below. If this is not done, it may, depending on the case, result in unnecessary troubleshooting for normally operating systems, thus making it more difficult to locate the problem, or in repairs not pertinent to the problem. Therefore, always follow the procedure in correct order and perform the diagnostic trouble code check.

DIAGNOSTIC TROUBLE CODE CHECK PROCEDURE

Diagnostic Trouble Code Check (Make a note of and then clear)	**Confirmation of Symptoms**	**Diagnostic Trouble Code Check**	**Problem Condition**
Diagnostic Trouble Code Display	Problem symptoms exist	Same diagnostic trouble code is displayed	Problem is still occurring in the diagnostic circuit
⇨	⇨	Normal code is displayed	The problem is still occurring in a place other than in the diagnostic circuit (The diagnostic trouble code displayed first is either for a past problem or it is a secondary problem)
⇨	No problem symptoms exist	⇨	The problem occurred in the diagnostic circuit in the past
Normal Code Display ⇨	Problem symptoms exist	Normal code is displayed	The problem is still occurring in a place other than in the diagnostic circuit
⇨	No problem symptoms exist	Normal code is displayed	The problem occurred in a place other than in the diagnostic circuit in the past

Taking into account the points on the previous page, a flow chart showing how to proceed with troubleshooting using the diagnostic trouble code check is shown below. This flow chart shows how to utilize the diagnostic trouble code check effectively, then by carefully checking the results, indicates how to proceed either to diagnostic trouble code troubleshooting or to troubleshooting of problem symptoms table.

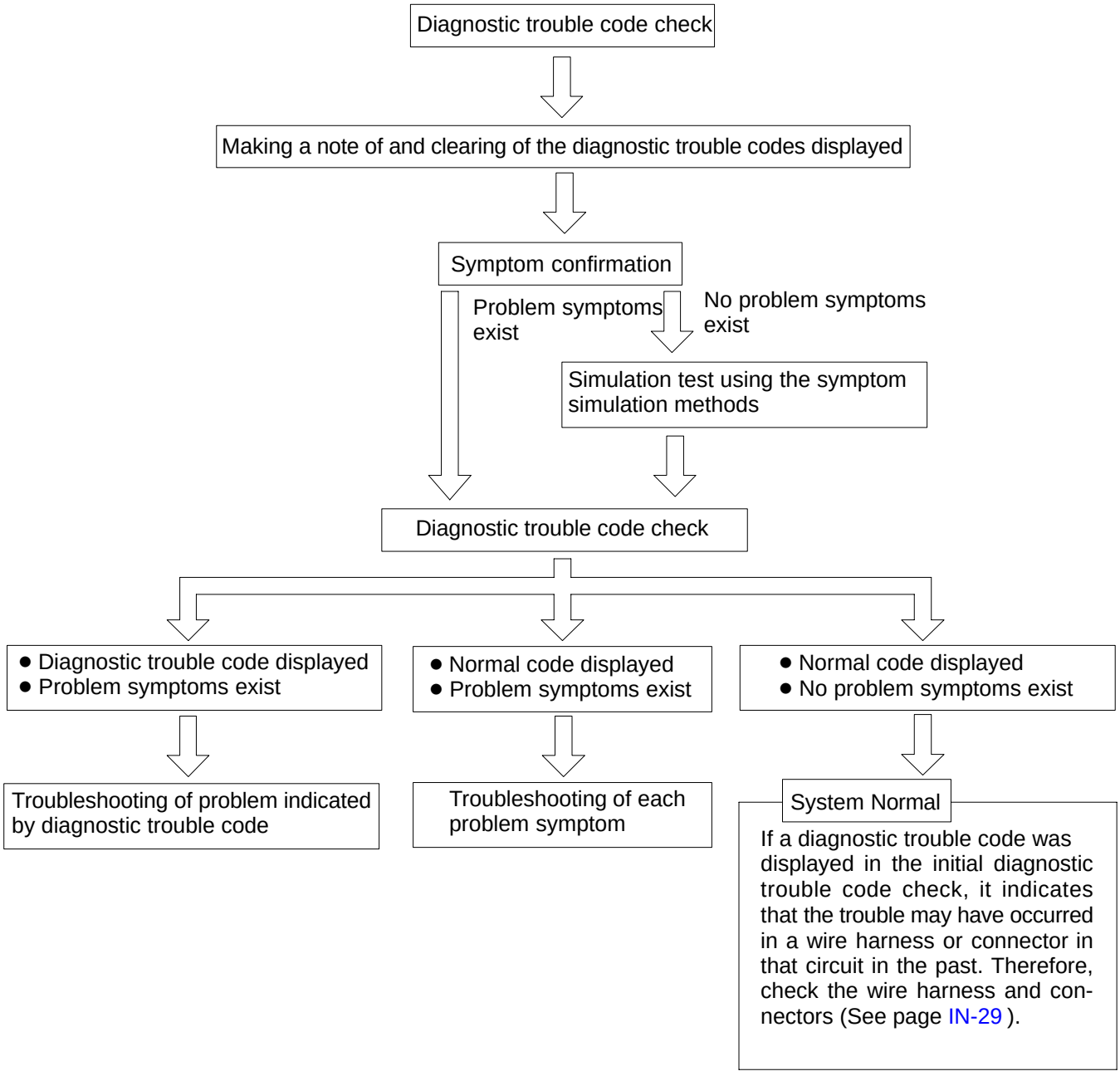

3. SYMPTOM SIMULATION

The most difficult case in troubleshooting is when there are no problem symptoms occurring. In such cases, a thorough customer problem analysis must be carried out, then simulate the same or similar conditions and environment in which the problem occurred in the customer's vehicle. No matter how much experience a technician has, or how skilled he may be, if he proceeds to troubleshoot without confirming the problem symptoms he will tend to overlook something important in the repair operation and make a wrong guess somewhere, which will only lead to a standstill. For example, for a problem which only occurs when the engine is cold, or for a problem which occurs due to vibration caused by the road during driving, etc., the problem can never be determined so long as the symptoms are confirmed with the engine hot condition or the vehicle at a standstill. Since vibration, heat or water penetration (moisture) is likely cause for problem which is difficult to reproduce, the symptom simulation tests introduced here are effective measures in that the external causes are applied to the vehicle in a stopped condition.

Important Points in the Symptom Simulation Test:

In the symptom simulation test, the problem symptoms should of course be confirmed, but the problem area or parts must also be found out. To do this, narrow down the possible problem circuits according to the symptoms before starting this test and connect a tester beforehand. After that, carry out the symptom simulation test, judging whether the circuit being tested is defective or normal and also confirming the problem symptoms at the same time. Refer to the problem symptoms table for each system to narrow down the possible causes of the symptom.

1	**VIBRATION METHOD: When vibration seems to be the major cause.**
CONNECTORS Slightly shake the connector vertically and horizontally. **WIRE HARNESS** Slightly shake the wire harness vertically and horizontally. The connector joint, fulcrum of the vibration, and body through portion are the major areas to be checked thoroughly.	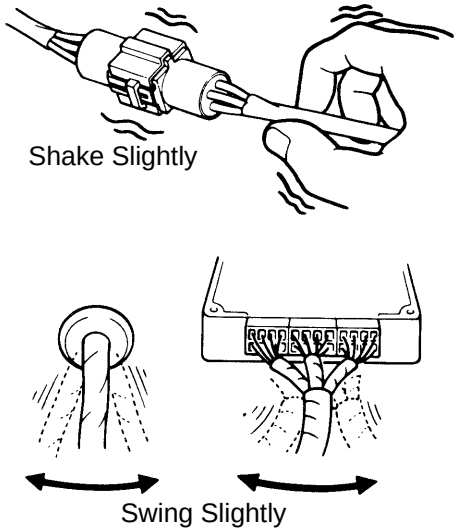 FI2331 FI2332
PARTS AND SENSOR Apply slight vibration with a finger to the part of the sensor considered to be the problem cause and check that the malfunction occurs. HINT: Applying strong vibration to relays may result in open relays.	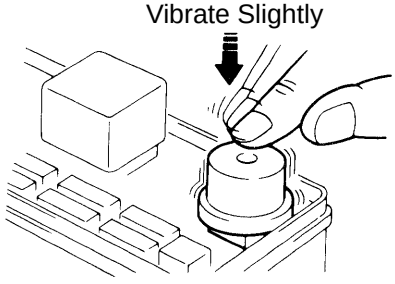 FI2330

V07268

2	HEAT METHOD: When the problem seems to occur when the suspect area is heated.

Heat the component that is the likely cause of the malfunction with a hair dryer or similar object. Check to see if the malfunction occurs.

NOTICE:

(1) Do not heat to more than 60 ˚C (140 ˚F). (Temperature is limited not to damage the components.)

(2) Do not apply heat directly to parts in the ECU.

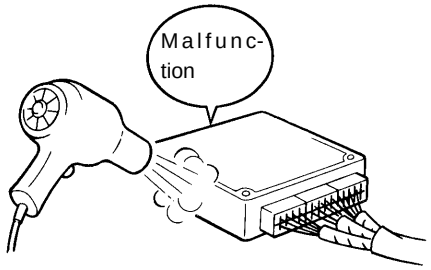

FI2334

3	WATER SPRINKLING METHOD: When the malfunction seems to occur on a rainy day or in a high-humidity condition.

Sprinkle water onto the vehicle and check to see if the malfunction occurs.

NOTICE:

(1) Never sprinkle water directly into the engine compartment, but indirectly change the temperature and humidity by applying water spray onto the radiator front surface.

(2) Never apply water directly onto the electronic components.

HINT:

If a vehicle is subject to water leakage, the leaked water may contaminate the ECU. When testing a vehicle with a water leakage problem, special caution must be taken.



FI6649

4	OTHER: When a malfunction seems to occur when electrical load is excessive.

Turn on all electrical loads including the heater blower, head lights, rear window defogger, etc. and check to see if the malfunction occurs.

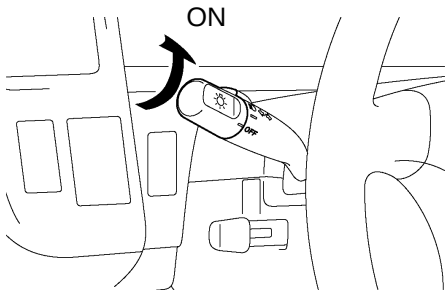

B02389

B02390

4. DIAGNOSTIC TROUBLE CODE CHART

The inspection procedure is shown in the table below. This table permits efficient and accurate troubleshooting using the diagnostic trouble codes displayed in the diagnostic trouble code check. Proceed with troubleshooting in accordance with the inspection procedure given in the diagnostic chart corresponding to the diagnostic trouble codes displayed. The engine diagnostic trouble code chart is shown below as an example.

- DTC No.
  Indicates the diagnostic trouble code.
- Page or Instructions
  Indicates the page where the inspection procedure for each circuit is to be found, or gives instructions for checking and repairs.

- Trouble Area
  Indicates the suspect area of the problem.

- Detection Item
  Indicates the system of the problem or contents of the problem.

DTC CHART (SAE Controlled)

HINT:
Parameters listed in the chart may not be exactly the same as your reading due to the type of instrument or other factors.

If a malfunction code is displayed during the DTC check mode, check the circuit for that code listed in the table below. For details of each code, turn to the page referred to under the "See page" for the respective "DTC No." in the DTC chart.

DTC No. (See page)	Detection Item	Trouble Area	MIL*	Memory
P0100 (DI-24)	Mass Air Flow Circuit Malfunction	● Open or short in mass air flow meter circuit ● Mass air flow meter ● ECM	○	○
P0101 (DI-28)	Mass Air Flow Circuit Range/ Performance Problem	● Mass air flow meter	○	○
P0110 (DI-29)	Intake Air Temp. Circuit Malfunction	● Open or short in intake air temp. sensor circuit ● Intake air temp. sensor ● ECM	○	○
P0115 (DI-33)	Engine Coolant Temp. Circuit Malfunction	● Open or short in engine coolant temp. sensor circuit ● Engine coolant temp. sensor ● ECM	○	○
P0116 (DI-37)	Engine Coolant Temp. Circuit Range/ Performance Problem	● Engine coolant temp. sensor ● Cooling system	○	○
	/Pedal Position Sensor/Switch nction	● Open or short in throttle position sensor circuit ● Throttle position sensor ● ECM		
	osition Sensor/ Switch rformance Prob-	● Throttle position sensor		

5. PROBLEM SYMPTOMS TABLE

The suspected circuits or parts for each problem symptom are shown in the table below. Use this table to troubleshoot the problem when a ”Normal” code is displayed in the diagnostic trouble code check but the problem is still occurring. Numbers in the table indicate the inspection order in which the circuits or parts should be checked.

HINT:

When the problem is not detected by the diagnostic system even though the problem symptom is present, it is considered that the problem is occurring outside the detection range of the diagnostic system, or that the problem is occurring in a system other than the diagnostic system.

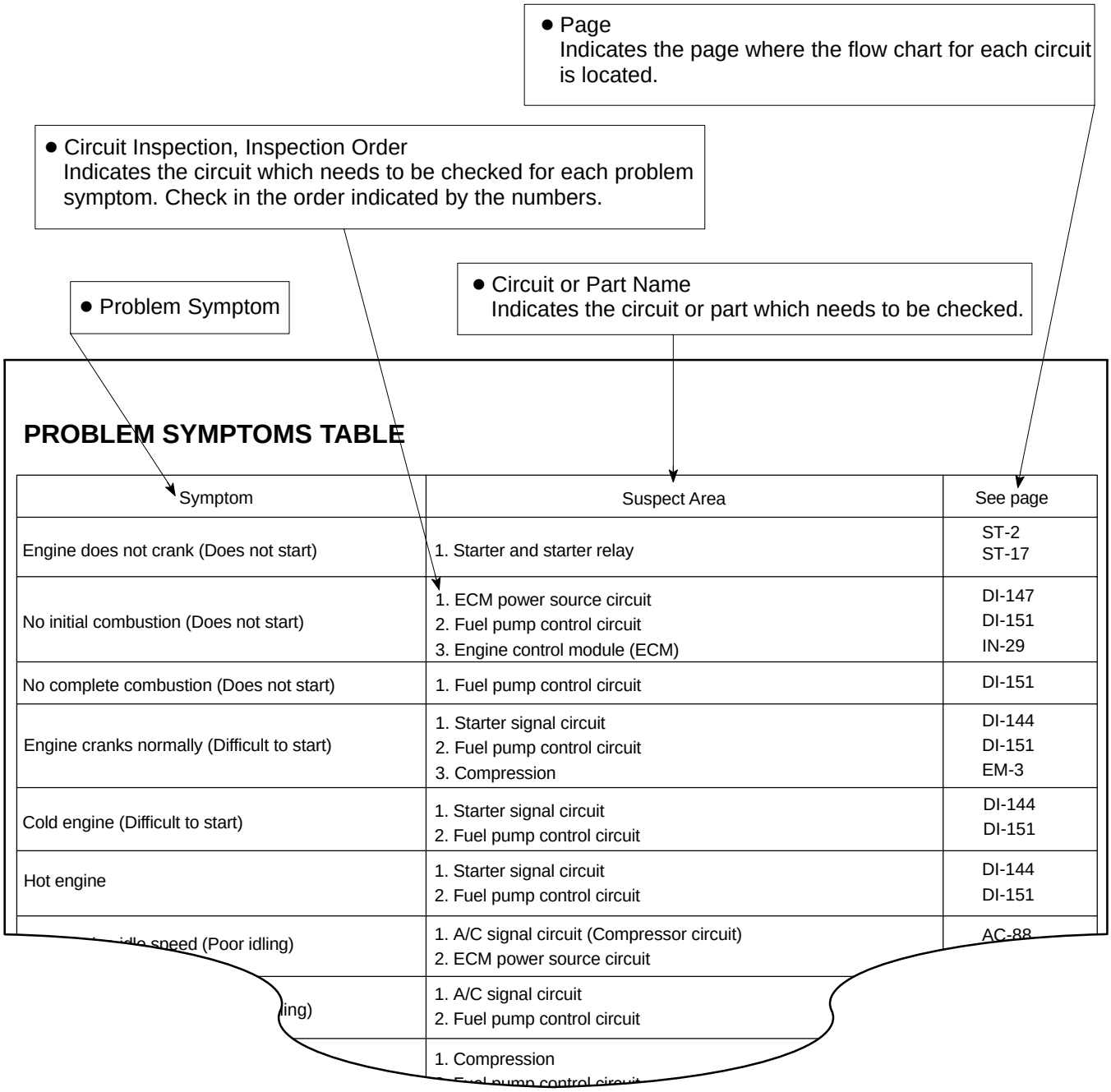

PROBLEM SYMPTOMS TABLE

Symptom	Suspect Area	See page
Engine does not crank (Does not start)	1. Starter and starter relay	ST-2 ST-17
No initial combustion (Does not start)	1. ECM power source circuit 2. Fuel pump control circuit 3. Engine control module (ECM)	DI-147 DI-151 IN-29
No complete combustion (Does not start)	1. Fuel pump control circuit	DI-151
Engine cranks normally (Difficult to start)	1. Starter signal circuit 2. Fuel pump control circuit 3. Compression	DI-144 DI-151 EM-3
Cold engine (Difficult to start)	1. Starter signal circuit 2. Fuel pump control circuit	DI-144 DI-151
Hot engine	1. Starter signal circuit 2. Fuel pump control circuit	DI-144 DI-151
idle speed (Poor idling)	1. A/C signal circuit (Compressor circuit) 2. ECM power source circuit	AC-88
ling)	1. A/C signal circuit 2. Fuel pump control circuit	
	1. Compression 2. Fuel pump control circuit	

6. CIRCUIT INSPECTION

How to read and use each page is shown below.

● Diagnostic Trouble Code No. and Detection Item

● Circuit Description
The major role and operation, etc. of the circuit and its component parts are explained.

DTC	P0325	Knock Sensor 1 Circuit Malfunction

CIRCUIT DESCRIPTION

Knock sensor is fitted to the cylinder block to detect engine knocking. This sensor contains a piezoelectric element which generates a voltage when it becomes deformed, which occurs when the cylinder block vibrates due to knocking. If engine knocking occurs, ignition timing is retarded to suppress it.

DTC No.	DTC Detecting Condition	Trouble Area
P0325	No knock sensor 1 signal to ECM with engine speed, 1,200 rpm or more.	● Open or short in knock sensor1 circuit ● Knock sensor 1 (looseness) ● ECM

If the ECM detects the above diagnosis conditions, it operates the fail safe function in which the corrective retard angle value is set to the maximum value.

● Indicates the diagnostic trouble code, diagnostic trouble code set parameter and suspect area of the problem.

WIRING DIAGRAM

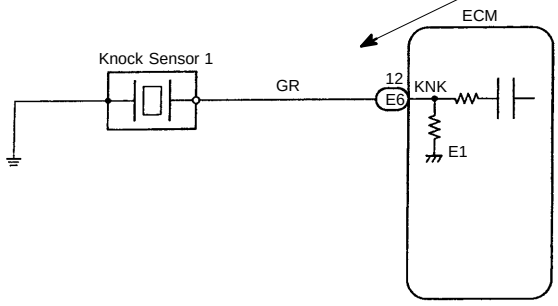

● Wiring Diagram
This shows a wiring diagram of the circuit.
Use this diagram together with ELECTRICAL WIRING DIAGRAM to thoroughly understand the circuit.
Wire colors are indicated by an alphabetical code.
B = Black, L = Blue, R = Red, BR = Brown,
LG = Light Green, V = Violet, G = Green,
O = Orange, W = White, GR = Gray, P = Pink,
Y = Yellow, SB = Sky Blue
The first letter indicates the basic wire color and the second letter indicates the color of the stripe.

V08423

● Indicates the position of the ignition switch during the check.

LOCK
Ignition Switch LOCK (OFF)

ON
Ignition Switch ON

START
Ignition Switch START

ACC
Ignition Switch ACC

● Inspection Procedure
Use the inspection procedure to determine if the circuit is normal or abnormal, and, if it is abnormal, use it to determine whether the problem is located in the sensors, actuators, wire harness or ECU.

INSPECTION PROCEDURE

1 **Check continuity between terminal KNK of ECM connector and body ground.**

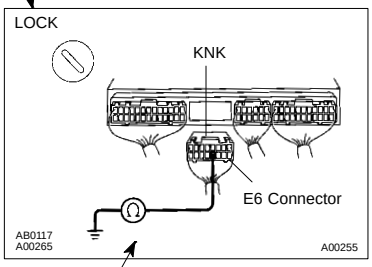

PREPARATION:
(a) Remove the glove compartment (See page SF-68).
(b) Disconnect the E6 connector of ECM.

CHECK:
Measure resistance between terminal KNK of ECM connector and body ground.

OK:
Resistance: 1 MΩ or higher

OK → **Go to step 3.**

NG

2 **Check knock sensor (See page SF-61).**

OK → **Replace knock sensor.**

● Indicates the place to check the voltage or resistance.
● Indicates the connector position to checked, from the front or back side.

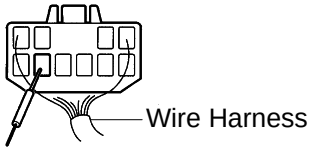

Check from the connector back side. (with harness)



Check from the connector front side. (without harness)
In this case, care must be taken not to bend the terminals.

● Indicates the condition of the connector of ECU during the check.

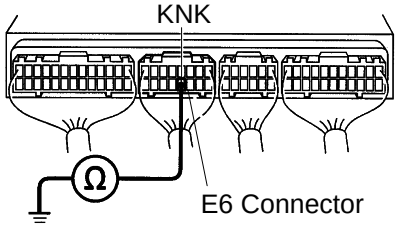

Connector being checked is connected.

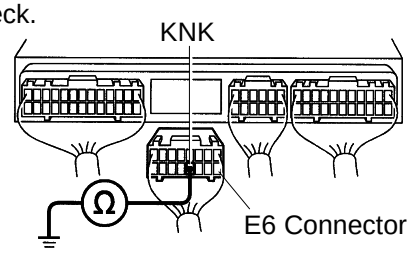

Connector being checked is disconnected.

V08425

IN05X-20

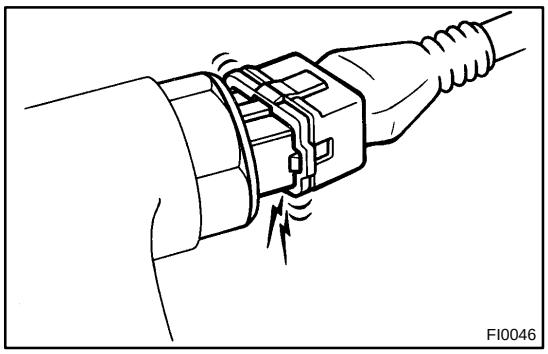
FI0046

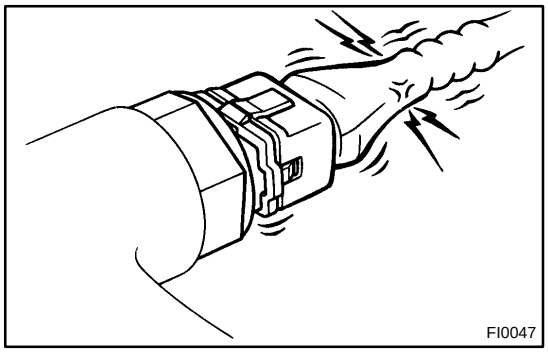
FI0047

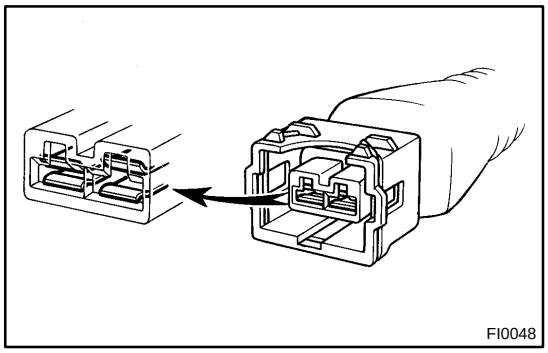
FI0048

HOW TO USE THE DIAGNOSTIC CHART AND INSPECTION PROCEDURE

1. CONNECTOR CONNECTION AND TERMINAL INSPECTION

- For troubleshooting, diagnostic trouble code charts or problem symptom table are provided for each circuit with detailed inspection procedures on the following pages.
- When all the component parts, wire harnesses and connectors of each circuit except the ECU are found to be normal in troubleshooting, then it is determined that the problem is in the ECU. Accordingly, if diagnosis is performed without the problem symptoms occurring, refer to Step 8 to replace the ECU. So always confirm that the problem symptoms are occurring, or proceed with inspection while using the symptom simulation method.
- The instructions ”Check wire harness and connector” and ”Check and replace ECU” which appear in the inspection procedure, are common and applicable to all diagnostic trouble codes. Follow the procedure outlined below whenever these instructions appear.

OPEN CIRCUIT:

This could be due to a disconnected wire harness, faulty contact in the connector, and a connector terminal pulled out, etc.

HINT:

- It is rarely the case that a wire is broken in the middle of it. Most cases occur at the connector. In particular, carefully check the connectors of sensors and actuators
- Faulty contact could be due to rusting of the connector terminals, to foreign materials entering terminals or a deformation of connector terminals. Simply disconnecting and reconnecting the connectors once changes the condition of the connection and may result in a return to normal operation. Therefore, in troubleshooting, if no abnormality is found in the wire harness and connector check, but the problem disappears after the check, then the cause is considered to be in the wire harness or connectors.

SHORT CIRCUIT:

This could be due to a contact between wire harness and the body ground or to a short circuit occurred inside the switch, etc.

HINT:

When there is a short circuit between the wire harness and body ground, check thoroughly whether the wire harness is caught in the body or is clamped properly.

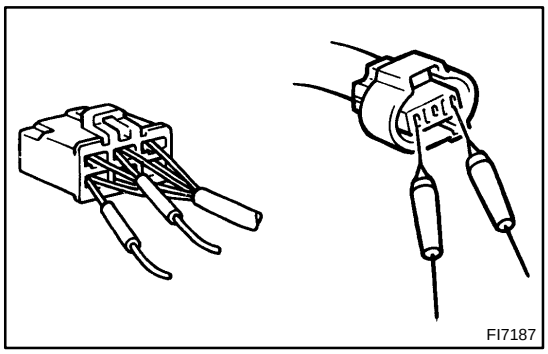

2. CONNECTOR HANDLING

When inserting tester probes into a connector, insert them from the rear of the connector. When necessary, use mini test leads. For water resistant connectors which cannot be accessed from behind, take good care not to deform the connector terminals.

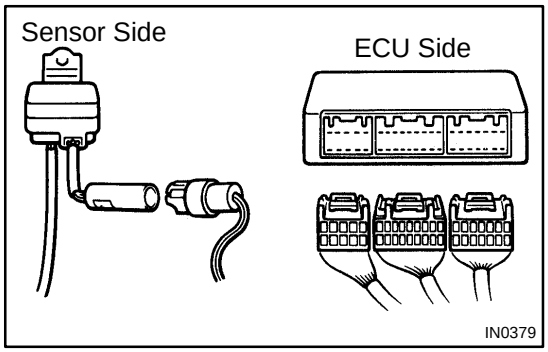

3. CONTINUITY CHECK (OPEN CIRCUIT CHECK)

(a) Disconnect the connectors at both ECU and sensor sides.

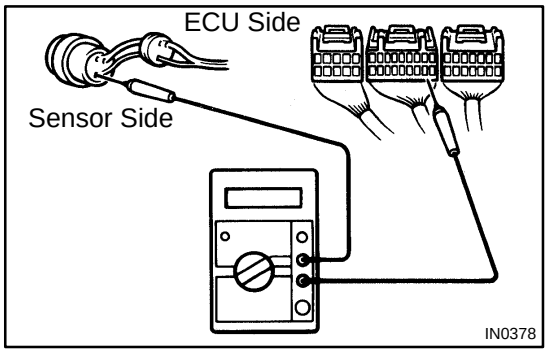

(b) Measure the resistance between the applicable terminals of the connectors.

Resistance: 1 Ω or less

HINT:

Measure the resistance while lightly shaking the wire harness vertically and horizontally.

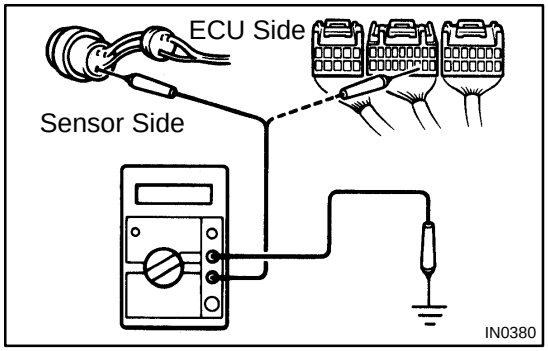

4. RESISTANCE CHECK (SHORT CIRCUIT CHECK)

(a) Disconnect the connectors on both ends.

(b) Measure the resistance between the applicable terminals of the connectors and body ground. Be sure to carry out this check on the connectors on both ends.

Resistance: 1 MΩ or higher

HINT:

Measure the resistance while lightly shaking the wire harness vertically and horizontally.

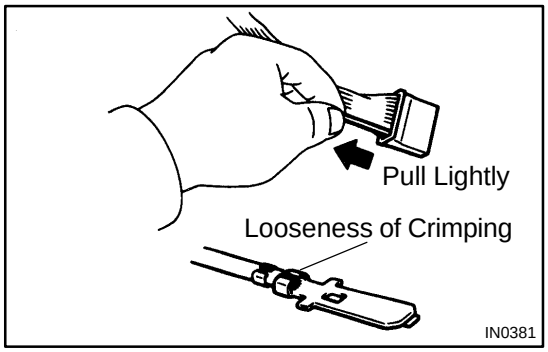

5. VISUAL CHECK AND CONTACT PRESSURE CHECK

(a) Disconnect the connectors at both ends.

(b) Check for rust or foreign material, etc. in the terminals of the connectors.

(c) Check crimped portions for looseness or damage and check that the terminals are secured in lock portion.

HINT:

The terminals should not come out when pulled lightly from the back.

(d) Prepare a test male terminal and insert it in the female terminal, then pull it out.

NOTICE:

When testing a gold-plated female terminal, always use a gold-plated male terminal.

HINT:

When the test terminal is pulled out more easily than others, there may be poor contact in that section.

Fig. 1

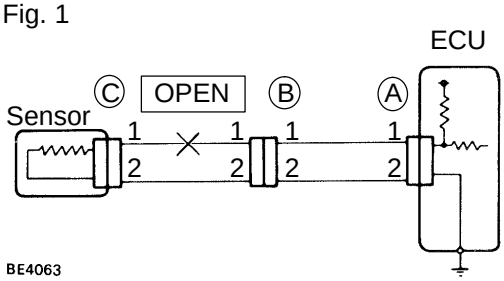

6. CHECK OPEN CIRCUIT

For the open circuit in the wire harness in Fig. 1, perform "(a) Continuity Check" or "(b) Voltage Check" to locate the section.

Fig. 2

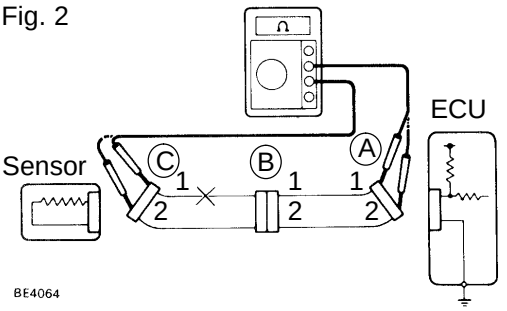

(a) Check the continuity.

(1) Disconnect connectors "A" and "C" and measure the resistance between them.

In the case of Fig. 2:

Between terminal 1 of connector "A" and terminal 1 of connector "C" → No continuity (open)

Between terminal 2 of connector "A" and terminal 2 of connector "C" → Continuity

Therefore, it is found out that there is an open circuit between terminal 1 of connector "A" and terminal 1 of connector "C".

Fig. 3

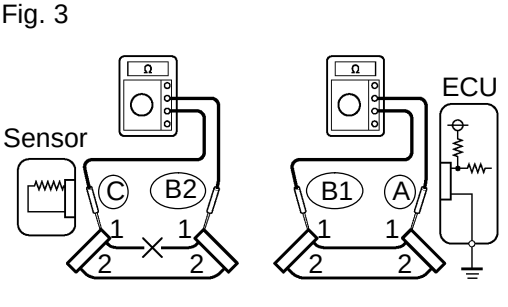

(2) Disconnect connector "B" and measure the resistance between the connectors.

In the case of Fig. 3:

Between terminal 1 of connector "A" and terminal 1 of connector "B1" → Continuity

Between terminal 1 of connector "B2" and terminal 1 of connector "C" → No continuity (open)

Therefore, it is found out that there is an open circuit between terminal 1 of connector "B2" and terminal 1 of connector "C".

Fig. 4

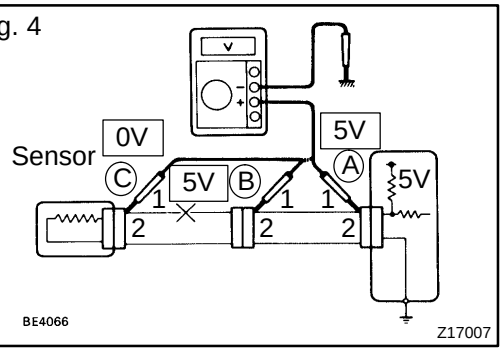

(b) Check the voltage.
In a circuit in which voltage is applied (to the ECU connector terminal), an open circuit can be checked for by conducting a voltage check.
As shown in Fig. 4, with each connector still connected, measure the voltage between body ground and terminal 1 of connector "A" at the ECU 5V output terminal, terminal 1 of connector "B", and terminal 1 of connector "C", in that order.

If the results are:
5V: Between Terminal 1 of connector "A" and Body Ground
5V: Between Terminal 1 of connector "B" and Body Ground
0V: Between Terminal 1 of connector "C" and Body Ground
Then it is found out that there is an open circuit in the wire harness between terminal 1 of "B" and terminal 1 of "C".

Fig. 5

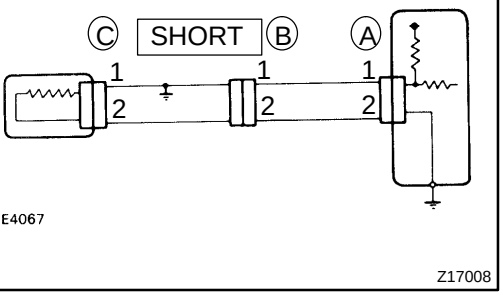

7. CHECK SHORT CIRCUIT

If the wire harness is ground shorted as in Fig. 5, locate the section by conducting a "continuity check with ground".

Fig. 6

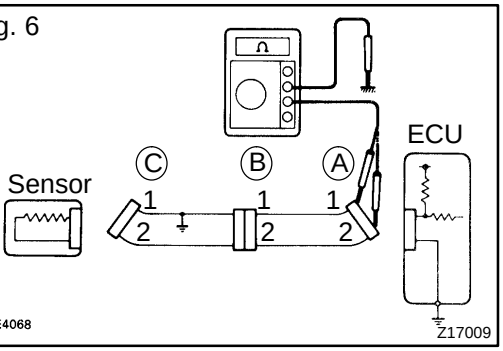

Check the continuity with ground.

(1) Disconnect connectors "A" and "C" and measure the resistance between terminal 1 and 2 of connector "A" and body ground.
In the case of Fig. 6:
Between terminal 1 of connector "A" and body ground → Continuity (short)
Between terminal 2 of connector "A" and body ground → No continuity
Therefore, it is found out that there is a short circuit between terminal 1 of connector "A" and terminal 1 of connector "C".

Fig. 7

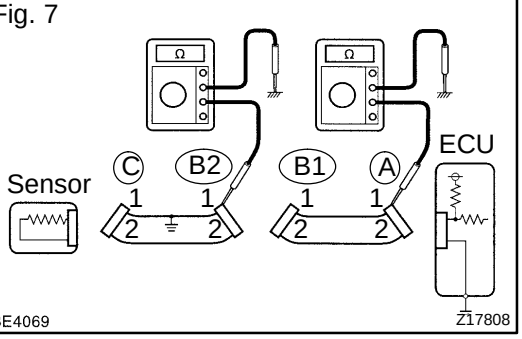

(2) Disconnect connector ”B” and measure the resistance between terminal 1 of connector ”A” and body ground, and terminal 1 of connector ”B2” and body ground.
Between terminal 1 of connector ”A” and body ground → No continuity
Between terminal 1 of connector ”B2” and body ground → Continuity (short)
Therefore, it is found out that there is a short circuit between terminal 1 of connector ”B2” and terminal 1 of connector ”C”.

8. CHECK AND REPLACE ECU

First check the ECU ground circuit. If it is faulty, repair it. If it is normal, the ECU could be faulty, so replace the ECU with a normal functioning one and check that the symptoms appear.

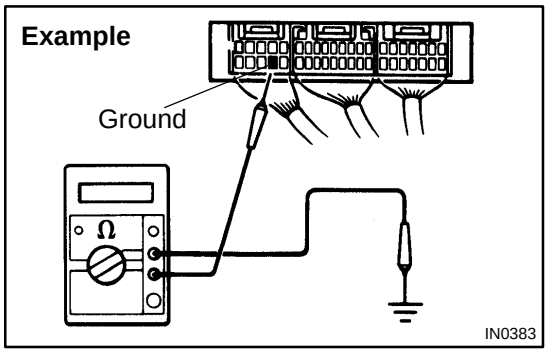

(1) Measure the resistance between the ECU ground terminal and the body ground.

Resistance: 1 Ω or less

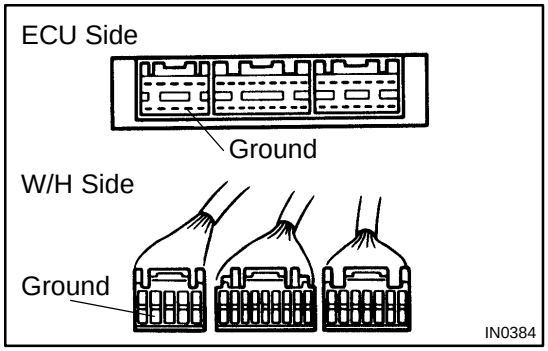

(2) Disconnect the ECU connector, check the ground terminals on the ECU side and the wire harness side for bend and check the contact pressure.

HOW TO USE THIS MANUAL

IN00U-43

GENERAL INFORMATION

1. INDEX

An INDEX is provided on the first page of each section to guide you to the item to be repaired. To assist you in finding your way through the manual, the Section Title and major heading are given at the top of every page.

2. PRECAUTION

At the beginning of each section, a PRECAUTION is given that pertains to all repair operations contained in that section.
Read these precautions before starting any repair task.

3. TROUBLESHOOTING

TROUBLESHOOTING tables are included for each system to help you diagnose the problem and find the cause. The fundamentals of how to proceed with troubleshooting are described on page IN-19 .
Be sure to read this before performing troubleshooting.

4. PREPARATION

Preparation lists the SST (Special Service Tools), recommended tools, equipment, lubricant and SSM (Special Service Materials) which should be prepared before beginning the operation and explains the purpose of each one.

5. REPAIR PROCEDURES

Most repair operations begin with an overview illustration. It identifies the components and shows how the parts fit together.
Example:

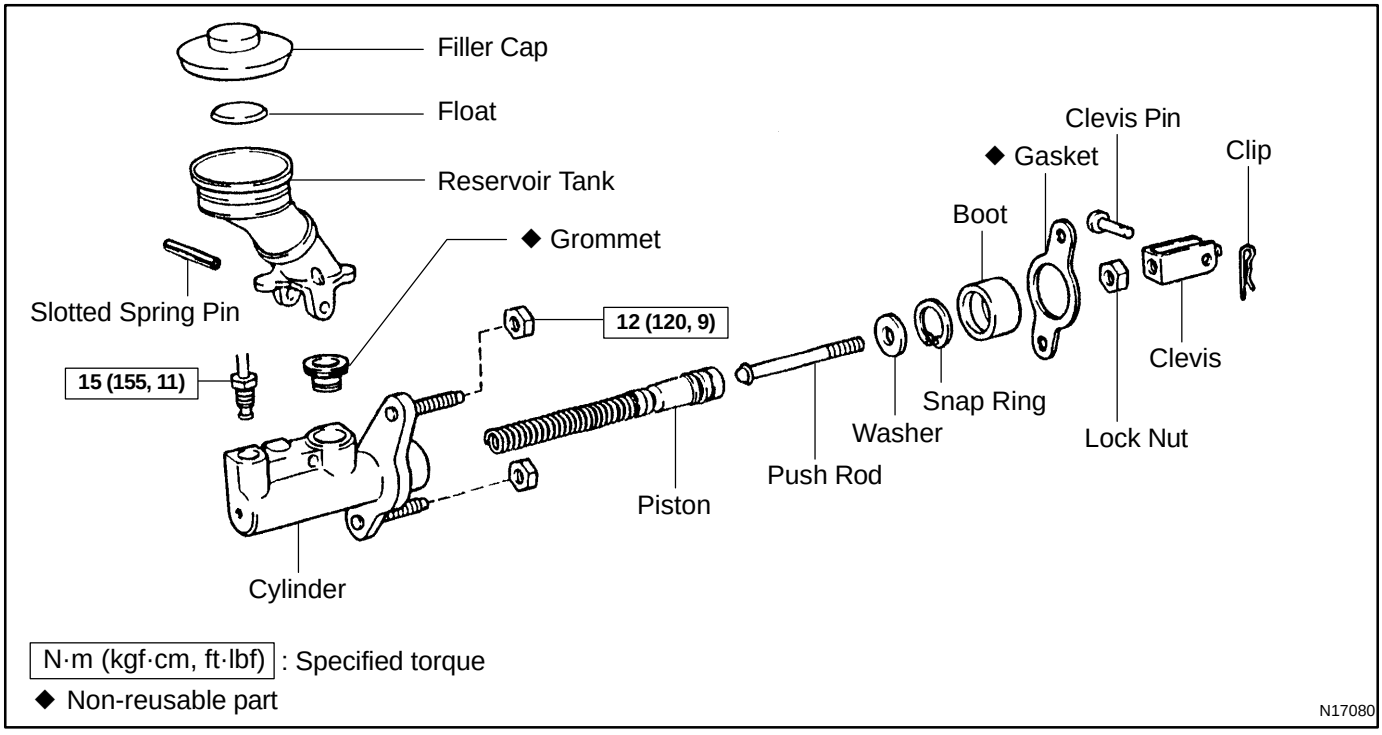

The procedures are presented in a step-by-step format:

- The illustration shows what to do and where to do it.
- The task heading tells what to do.
- The detailed text tells how to perform the task and gives other information such as specifications and warnings.

Example:

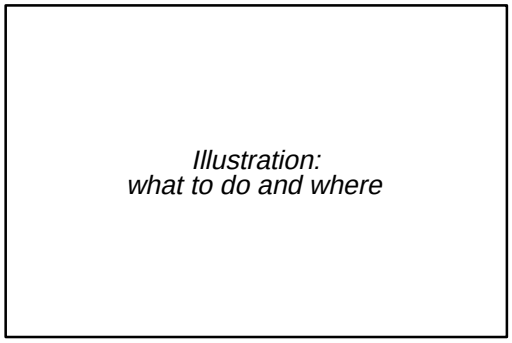

Task heading : what to do

21. CHECK PISTON STROKE OF OVERDRIVE BRAKE

(a) Place SST and a dial indicator onto the overdrive brake piston as shown in the illustration.

SST 09350-30020 (09350-06120)

Set part No. *Component part No.*

Detailed text : how to do task

(b) Measure the stroke applying and releasing the compressed air (392 — 785 kPa, 4 — 8 kgf/cm^2 or 57 — 114 psi) as shown in the illustration.

Piston stroke: 1.40 — 1.70 mm (0.0551 — 0.0669 in.)

Specification

This format provides the experienced technician with a FAST TRACK to the information needed. The upper case task heading can be read at a glance when necessary, and the text below it provides detailed information. Important specifications and warnings always stand out in bold type.

6. REFERENCES

References have been kept to a minimum. However, when they are required you are given the page to refer to.

7. SPECIFICATIONS

Specifications are presented in bold type throughout the text where needed. You never have to leave the procedure to look up your specifications. They are also found in Service Specifications section for quick reference.

8. CAUTIONS, NOTICES, HINTS:

- CAUTIONS are presented in bold type, and indicate there is a possibility of injury to you or other people.
- NOTICES are also presented in bold type, and indicate the possibility of damage to the components being repaired.
- HINTS are separated from the text but do not appear in bold. They provide additional information to help you perform the repair efficiently.

9. SI UNIT

The UNITS given in this manual are primarily expressed according to the SI UNIT (International System of Unit), and alternately expressed in the metric system and in the English System.

Example:

Torque: 30 N·m (310 kgf·cm, 22 ft·lbf)

IDENTIFICATION INFORMATION

IN04P-08

VEHICLE IDENTIFICATION AND ENGINE SERIAL NUMBER

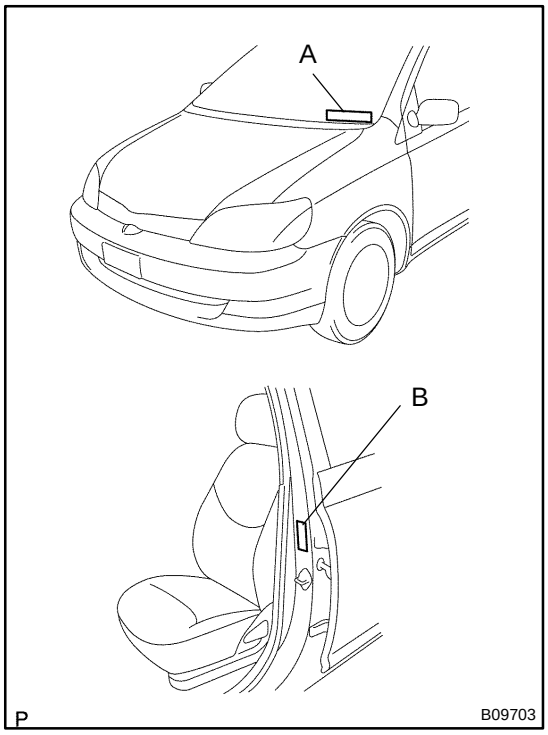

1. VEHICLE IDENTIFICATION NUMBER

The vehicle identification number is stamped on the vehicle identification number plate and the certification label, as shown in the illustration.

A: Vehicle Identification Number Plate
B: Certification Label

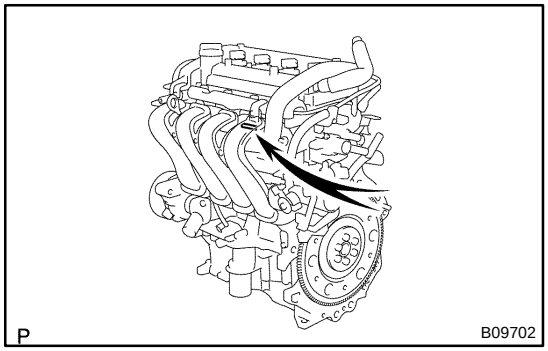

2. ENGINE SERIAL NUMBER

The engine serial number is stamped on the engine block, as shown in the illustration.

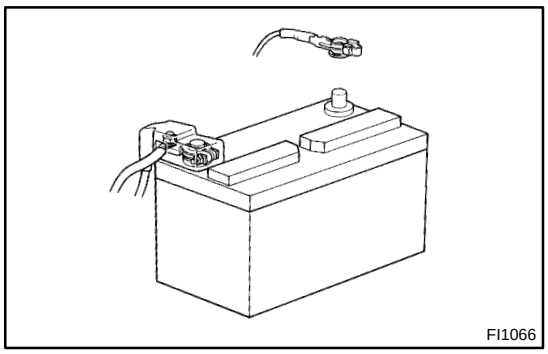
FI1066

REPAIR INSTRUCTIONS

IN0DC-06

GENERAL INFORMATION

BASIC REPAIR HINT

(a) Use fender, seat and floor covers to keep the vehicle clean and prevent damage.

(b) During disassembly, keep parts in the appropriate order to facilitate reassembly.

(c) Installation and removal of battery terminal:
  (1) Before performing electrical work, disconnect the negative (-) terminal cable from the battery.
  (2) If it is necessary to disconnect the battery for inspection or repair, first disconnect the negative (-) terminal cable.
  (3) When disconnecting the terminal cable, to prevent damage to the battery terminal, loosen the cable nut and raise the cable straight up without twisting or prying it.
  (4) Clean the battery terminals and cable ends with a clean shop rag. Do not scrape them with a file or other abrasive objects.
  (5) Install the cable ends to the battery terminals after loosening the nut, and tighten the nut after installation. Do not use a hammer to tap the cable ends onto the terminals.
  (6) Be sure the cover for the positive (+) terminal is properly in place.

(d) Check hose and wiring connectors to make sure that they are connected securely and correctly.

(e) Non-reusable parts
  (1) Always replace cotter pins, gaskets, O-rings, oil seals, etc. with new ones.
  (2) Non-reusable parts are indicated in the component illustrations by the "◆" symbol.

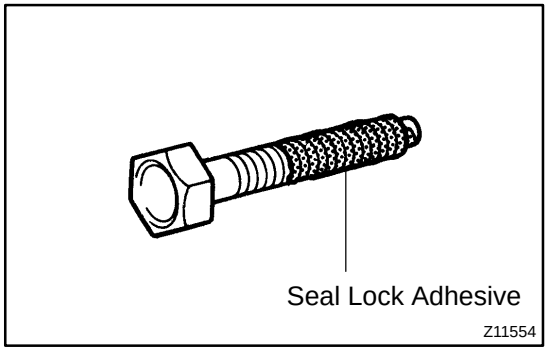

Z11554

(f) Precoated parts
Precoated parts are bolts, nuts, etc. that are coated with a seal lock adhesive at the factory.
  (1) If a precoated part is retightened, loosened or caused to move in any way, it must be recoated with the specified adhesive.
  (2) When reusing precoated parts, clean off the old adhesive and dry with compressed air. Then apply the specified seal lock adhesive to the bolt, nut or threads.

(3) Precoated parts are indicated in the component illustrations by the "★" symbol.

(g) When necessary, use a sealer on gaskets to prevent leaks.

(h) Carefully observe all specifications for bolt tightening torques. Always use a torque wrench.

(i) Use of special service tools (SST) and special service materials (SSM) may be required, depending on the nature of the repair. Be sure to use SST and SSM where specified and follow the proper work procedure. A list of SST and SSM can be found in Preparation section in this manual.

Medium Current Fuse and High Current Fuse
Equal Amperage Rating

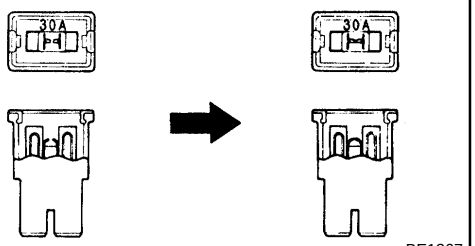

BE1367

(j) When replacing fuses, be sure the new fuse has the correct amperage rating. DO NOT exceed the rating or use one with a lower rating.

Illustration	Symbol	Part Name	Abbreviation
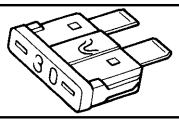 BE5594	 IN0365	FUSE	FUSE
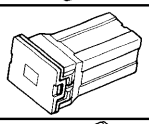 BE5595	 IN0366	MEDIUM CURRENT FUSE	M-FUSE
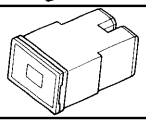 BE5596	 IN0367	HIGH CURRENT FUSE	H-FUSE
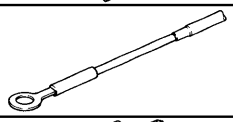 BE5597	 IN0367	FUSIBLE LINK	FL
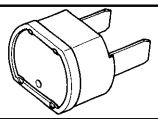 BE5598	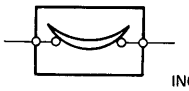 IN0368	CIRCUIT BREAKER	CB

V00076

(k) Care must be taken when jacking up and supporting the vehicle. Be sure to lift and support the vehicle at the proper locations (See page IN-8).
- Cancel the parking brake on the level place and shift the transmission in Neutral (or N position).
- When jacking up the front wheels of the vehicle, at first place stoppers behind the rear wheels.
- When jacking up the rear wheels of the vehicle, at first place stoppers before the front wheels.
- When either the front or rear wheels only should be jacked up, set rigid racks and place stoppers in front and behind the other wheels on the ground.
- After the vehicle is jacked up, be sure to support it on rigid racks. It is extremely dangerous to do any work on a vehicle raised on a jack alone, even for a small job that can be finished quickly.

(l) Observe the following precautions to avoid damage to the following parts:

(1) Do not open the cover or case of the ECU unless absolutely necessary. (If the IC terminals are touched, the IC may be destroyed by static electricity.)

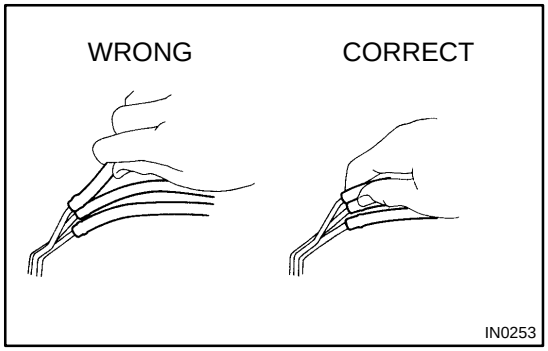

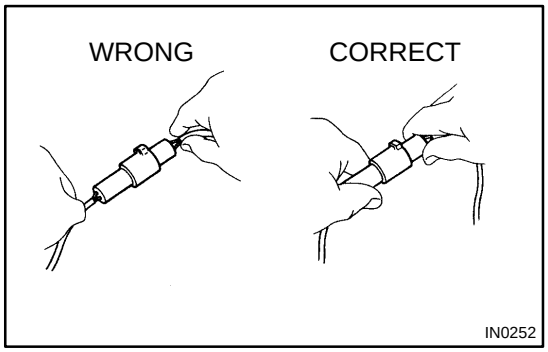

(2) To disconnect vacuum hoses, pull off the end, not the middle of the hose.

(3) To pull apart electrical connectors, pull on the connector itself, not the wires.

(4) Be careful not to drop electrical components, such as sensors or relays. If they are dropped on a hard floor, they should be replaced and not reused.

(5) When steam cleaning an engine, protect the electronic components, air filter and emission-related components from water.

(6) Never use an impact wrench to remove or install temperature switches or temperature sensors.

(7) When checking continuity at the wire connector, insert the tester probe carefully to prevent terminals from bending.

(8) When using a vacuum gauge, never force the hose onto a connector that is too large. Use a step-down adapter for adjustment. Once the hose has been stretched, it may leak air.

Example

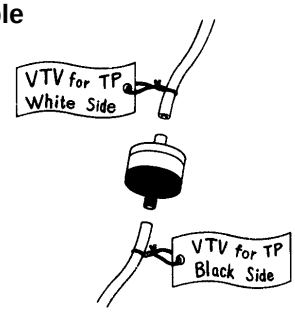

IN0002

(m) Installation and removal of vacuum hose:
  (1) When disconnecting vacuum hoses, use tags to identify where they should be reconnected to.
  (2) After completing a job, double check that the vacuum hoses are properly connected. A label under the hood shows the proper layout.

(n) Unless otherwise stated, all resistance is measured at an ambient temperature of 20˚C (68˚F). Because the resistance may be outside specifications if measured at high temperatures immediately after the vehicle has been running, measurement should be made when the engine has cooled down.

IN04O-15

VEHICLE LIFT AND SUPPORT LOCATIONS

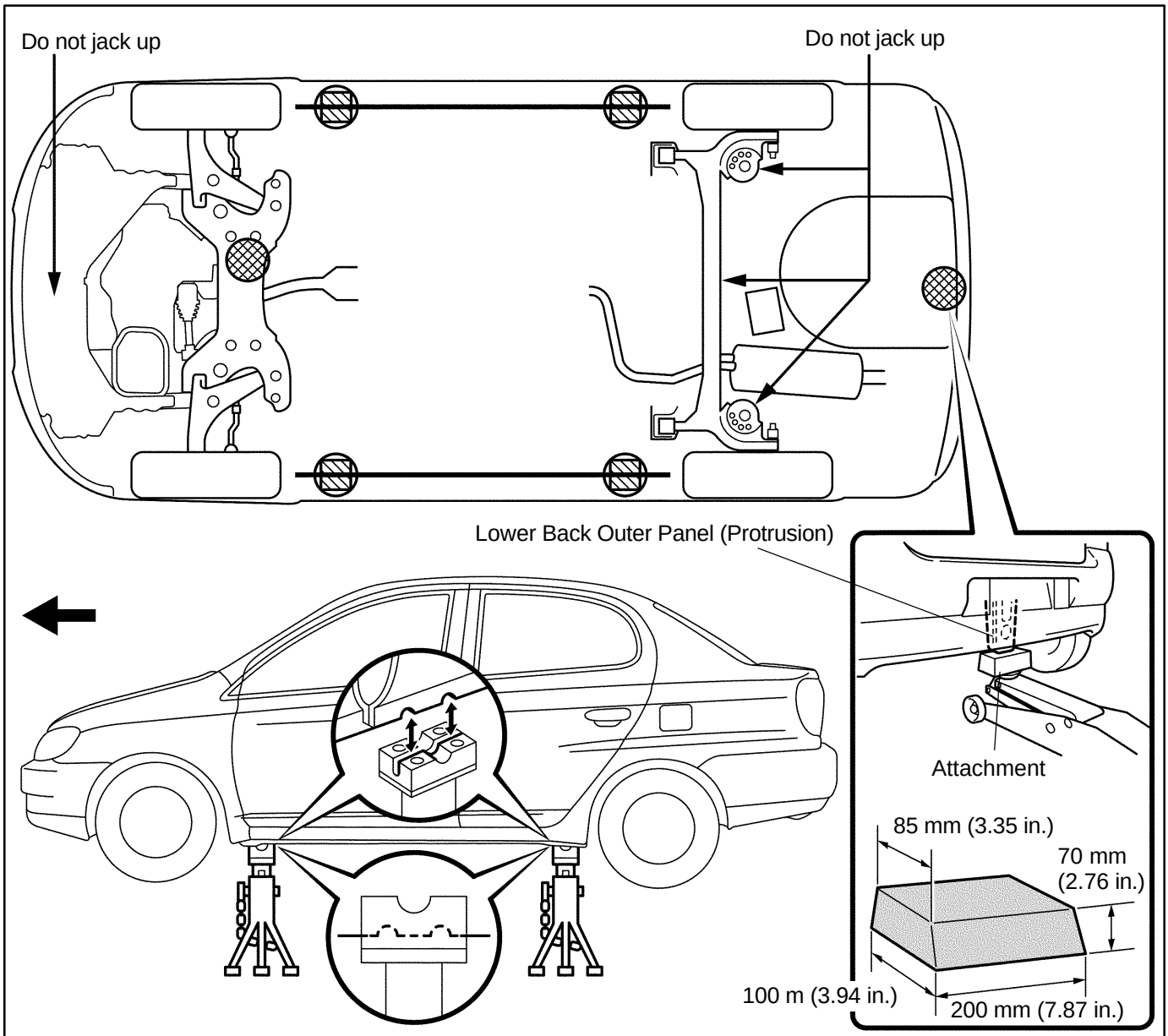

JACK POSITION

Front - - - - - - - - - - Front suspension member
Rear - - - - - - - - - - Lower Back Outer Panel (Protrusion)

CAUTION : When jacking-up the front and rear, make sure the vehicle is not carrying any extra weight.

PANTOGRAPH JACK POSITION

SUPPORT POSITION

Safety stand and swing arm type lift -

P B09701

Plate type lift

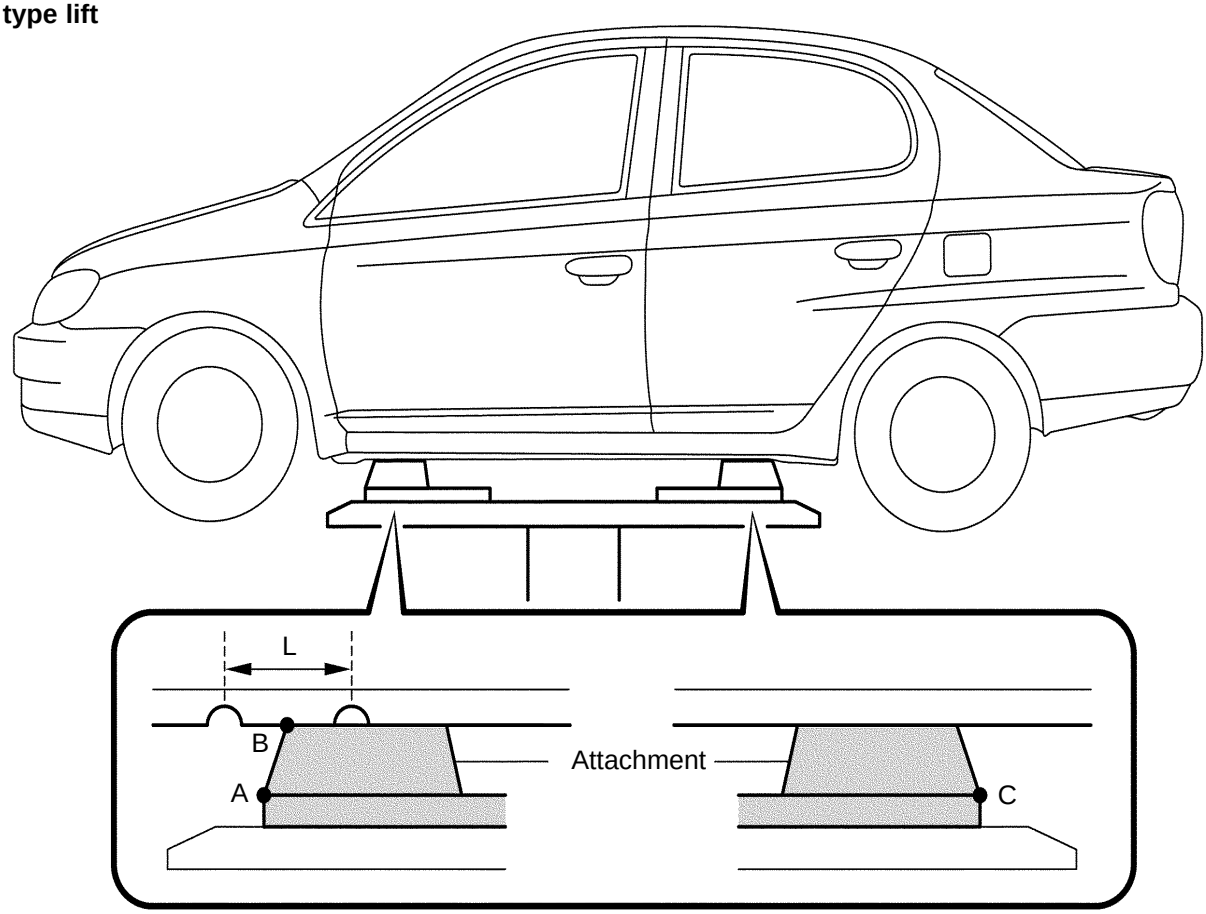

HINT:

Right and left set position	Place the vehicle over the center of the lift.
Front and rear set position	● Align the cushion gum ends of the plate with the attachment lower ends (A, C) horizontally to the vehicle. ● Align the attachment upper end (B) with the center of the front jack support point (L).

Attachment dimensions

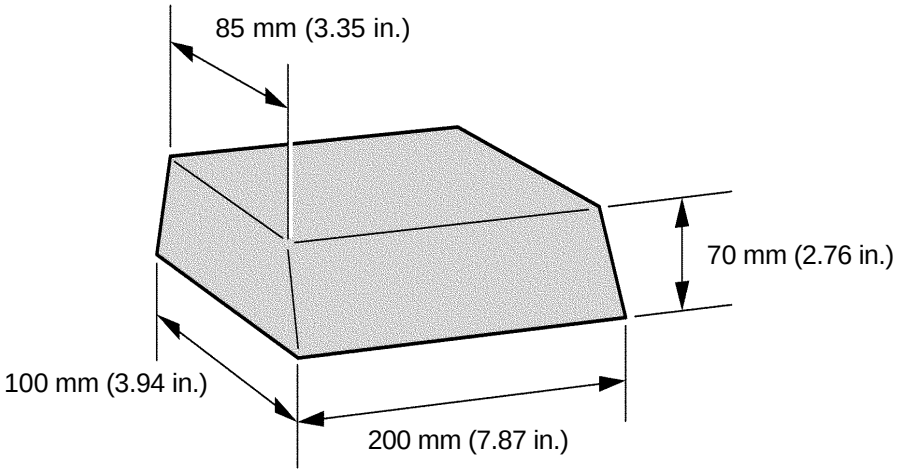

P

B09700

TERMS

IN04Q-09

ABBREVIATIONS USED IN THIS MANUAL

Abbreviations	Meaning
ABS	Anti-Lock Brake System
AC	Alternating Current
ACC	Accessory
ACIS	Acoustic Control Induction System
ACSD	Automatic Cold Start Device
A.D.D.	Automatic Disconnecting Differential
A/F	Air-Fuel Ratio
AHC	Active Height Control Suspension
ALR	Automatic Locking Retractor
ALT	Alternator
AMP	Amplifier
ANT	Antenna
APPROX.	Approximately
A/T	Automatic Transmission (Transaxle)
ATDC	After Top Dead Center
ATF	Automatic Transmission Fluid
AUTO	Automatic
AUX	Auxiliary
AVG	Average
AVS	Adaptive Variable Suspension
BA	Brake Assist
BACS	Boost Altitude Compensation System
BAT	Battery
BDC	Bottom Dead Center
B/L	Bi-Level
B/S	Bore-Stroke Ratio
BTDC	Before Top Dead Center
BVSV	Bimetallic Vacuum Switching Valve
Calif.	California
CB	Circuit Breaker
CCo	Catalytic Converter For Oxidation
CD	Compact Disc
CF	Cornering Force
CG	Center Of Gravity
CH	Channel
COMB.	Combination
CPE	Coupe
CPS	Combustion Pressure Sensor
CPU	Central Processing Unit
CRS	Child Restraint System
CTR	Center
C/V	Check Valve

CV	Control Valve
CW	Curb Weight
DC	Direct Current
DEF	Defogger
DFL	Deflector
DIFF.	Differential
DIFF. LOCK	Differential Lock
D/INJ	Direct Injection
DLI	Distributorless Ignition
DOHC	Double Over Head Cam
DP	Dash Pot
DS	Dead Soak
DSP	Digital Signal Processor
ECAM	Engine Control And Measurement System
ECD	Electronic Controlled Diesel
ECDY	Eddy Current Dynamometer
ECU	Electronic Control Unit
ED	Electro-Deposited Coating
EDU	Electronic Driving Unit
EDIC	Electric Diesel Injection Control
EFI	Electronic Fuel Injection
E/G	Engine
EGR-VM	Egr-Vacuum Modulator
ELR	Emergency Locking Retractor
ENG	Engine
ESA	Electronic Spark Advance
ETCS	Electronic Throttle Control System
EVP	Evaporator
E-VRV	Electric Vacuum Regulating Valve
EXH	Exhaust
FE	Fuel Economy
FF	Front-Engine Front-Wheel-Drive
F/G	Fuel Gage
FIPG	Formed In Place Gasket
FL	Fusible Link
F/P	Fuel Pump
FPU	Fuel Pressure Up
Fr	Front
FR	Front-Engine Rear-Wheel-Drive
F/W	Flywheel
FW/D	Flywheel Damper
FWD	Front-Wheel-Drive
GAS	Gasoline
GND	Ground
HAC	High Altitude Compensator
H/B	Hatchback

H-FUSE	High Current Fuse
HI	High
HID	High Intensity Discharge (Head Lamp)
HSG	Housing
HT	Hard Top
HWS	Heated Windshield System
IAC	Idle Air Control
IC	Integrated circuit
IDI	Indirect Diesel Injection
IFS	Independent Front Suspension
IG	Ignition
IIA	Integrated Ignition Assembly
IN	Intake (Manifold, Valve)
INT	Intermittent
I/P	Instrument Panel
IRS	Independent Rear Suspension
J/B	Junction Block
J/C	Junction Connector
KD	Kick-Down
LAN	Local Area Network
LB	Liftback
LCD	Liquid Crystal Display
LED	Light Emitting Diode
LH	Left-Hand
LHD	Left-Hand Drive
L/H/W	Length, Height, Width
LLC	Long-Life Coolant
LNG	Liquified Natural Gas
LO	Low
LPG	Liquified Petroleum Gas
LSD	Limited Slip Differential
LSP & PV	Load Sensing Proportioning And Bypass Valve
LSPV	Load Sensing Proportioning Valve
MAX.	Maximum
MIC	Microphone
MIL	Malfunction Indicator Lamp
MIN.	Minimum
MP	Multipurpose
MPX	Multiplex Communication System
M/T	Manual Transmission
MT	Mount
MTG	Mounting
N	Neutral
NA	Natural Aspiration
No.	Number
O/D	Overdrive

OEM	Original Equipment Manufacturing
OHC	Overhead Camshaft
OHV	Overhead Valve
OPT	Option
O/S	Oversize
P & BV	Proportioning And Bypass Valve
PCS	Power Control System
PCV	Positive Crankcase Ventilation
PKB	Parking Brake
PPS	Progressive Power Steering
PS	Power Steering
PTO	Power Take-Off
R & P	Rack And Pinion
R/B	Relay Block
RBS	Recirculating Ball Type Steering
R/F	Reinforcement
RFS	Rigid Front Suspension
RRS	Rigid Rear Suspension
RH	Right-Hand
RHD	Right-Hand Drive
RLY	Relay
ROM	Read Only Memory
Rr	Rear
RR	Rear-Engine Rear-Wheel Drive
RWD	Rear-Wheel Drive
SDN	Sedan
SEN	Sensor
SICS	Starting Injection Control System
SOC	State Of Charge
SOHC	Single Overhead Camshaft
SPEC	Specification
SPI	Single Point Injection
SRS	Supplemental Restraint System
SSM	Special Service Materials
SST	Special Service Tools
STD	Standard
STJ	Cold-Start Fuel Injection
SW	Switch
SYS	System
T/A	Transaxle
TACH	Tachometer
TBI	Throttle Body Electronic Fuel Injection
TC	Turbocharger
TCCS	TOYOTA Computer-Controlled System
TCV	Timing Control Valve
TDC	Top Dead Center

TEMP.	Temperature
TEMS	TOYOTA Electronic Modulated Suspension
TIS	Total Information System For Vehicle Development
T/M	Transmission
TMC	TOYOTA Motor Corporation
TMMK	TOYOTA Motor Manufacturing Kentucky, Inc.
TRAC	Traction Control System
TURBO	Turbocharge
U/D	Underdrive
U/S	Undersize
VCV	Vacuum Control Valve
VENT	Ventilator
VIN	Vehicle Identification Number
VPS	Variable Power Steering
VSC	Vehicle Skid Control
VSV	Vacuum Switching Valve
VTV	Vacuum Transmitting Valve
w/	With
WGN	Wagon
W/H	Wire Harness
w/o	Without
1st	First
2nd	Second
2WD	Two Wheel Drive Vehicle (4x2)
4WD	Four Wheel Drive Vehicle (4x4)

IN0CI-02

GLOSSARY OF SAE AND TOYOTA TERMS

This glossary lists all SAE-J1930 terms and abbreviations used in this manual in compliance with SAE recommendations, as well as their TOYOTA equivalents.

SAE ABBREVIATIONS	SAE TERMS	TOYOTA TERMS ( )--ABBREVIATIONS
A/C	Air Conditioning	Air Conditioner
ACL	Air Cleaner	Air Cleaner, A/CL
AIR	Secondary Air Injection	Air Injection (AI)
AP	Accelerator Pedal	-
B+	Battery Positive Voltage	+B, Battery Voltage
BARO	Barometric Pressure	HAC
CAC	Charge Air Cooler	Intercooler
CARB	Carburetor	Carburetor
CFI	Continuous Fuel Injection	-
CKP	Crankshaft Position	Crank Angle
CL	Closed Loop	Closed Loop
CMP	Camshaft Position	Cam Angle
CPP	Clutch Pedal Position	-
CTOX	Continuous Trap Oxidizer	-
CTP	Closed Throttle Position	LL ON, Idle ON
DFI	Direct Fuel Injection (Diesel)	Direct Injection (DI)
DI	Distributor Ignition	-
DLC1 DLC2 DLC3	Data Link Connector 1 Data Link Connector 2 Data Link Connector 3	1: Check Connector 2: Total Diagnosis Comunication Link (TDCL) 3: OBD II Diagnostic Connector
DTC	Diagnostic Trouble Code	Diagnostic Code
DTM	Diagnostic Test Mode	-
ECL	Engine Control Level	-
ECM	Engine Control Module	Engine ECU (Electronic Control Unit)
ECT	Engine Coolant Temperature	Coolant Temperature, Water Temperature (THW)
EEPROM	Electrically Erasable Programmable Read Only Memory	Electrically Erasable Programmable Read Only Memory (EEPROM), Erasable Programmable Read Only Memory (EPROM)
EFE	Early Fuel Evaporation	Cold Mixture Heater (CMH), Heat Control Valve (HCV)
EGR	Exhaust Gas Recirculation	Exhaust Gas Recirculation (EGR)
EI	Electronic Ignition	TOYOTA Distributorless Ignition (TDI)
EM	Engine Modification	Engine Modification (EM)
EPROM	Erasable Programmable Read Only Memory	Programmable Read Only Memory (PROM)
EVAP	Evaporative Emission	Evaporative Emission Control (EVAP)
FC	Fan Control	-
FEEPROM	Flash Electrically Erasable Programmable Read Only Memory	-
FEPROM	Flash Erasable Programmable Read Only Memory	-
FF	Flexible Fuel	-
FP	Fuel Pump	Fuel Pump
GEN	Generator	Alternator
GND	Ground	Ground (GND)

HO2S	Heated Oxygen Sensor	Heated Oxygen Sensor (HO_2S)
IAC	Idle Air Control	Idle Speed Control (ISC)
IAT	Intake Air Temperature	Intake or Inlet Air Temperature
ICM	Ignition Control Module	-
IFI	Indirect Fuel Injection	Indirect Injection (IDL)
IFS	Inertia Fuel-Shutoff	-
ISC	Idle Speed Control	-
KS	Knock Sensor	Knock Sensor
MAF	Mass Air Flow	Air Flow Meter
MAP	Manifold Absolute Pressure	Manifold Pressure Intake Vacuum
MC	Mixture Control	Electric Bleed Air Control Valve (EBCV) Mixture Control Valve (MCV) Electric Air Control Valve (EACV)
MDP	Manifold Differential Pressure	-
MFI	Multiport Fuel Injection	Electronic Fuel Injection (EFI)
MIL	Malfunction Indicator Lamp	Check Engine Lamp
MST	Manifold Surface Temperature	-
MVZ	Manifold Vacuum Zone	-
NVRAM	Non-Volatile Random Access Memory	-
O2S	Oxygen Sensor	Oxygen Sensor, O_2 Sensor (O_2S)
OBD	On-Board Diagnostic	On-Board Diagnostic System (OBD)
OC	Oxidation Catalytic Converter	Oxidation Catalyst Convert (OC), CCo
OP	Open Loop	Open Loop
PAIR	Pulsed Secondary Air Injection	Air Suction (AS)
PCM	Powertrain Control Module	-
PNP	Park/Neutral Position	-
PROM	Programmable Read Only Memory	-
PSP	Power Steering Pressure	-
PTOX	Periodic Trap Oxidizer	Diesel Particulate Filter (DPF) Diesel Particulate Trap (DPT)
RAM	Random Access Memory	Random Access Memory (RAM)
RM	Relay Module	-
ROM	Read Only Memory	Read Only Memory (ROM)
RPM	Engine Speed	Engine Speed
SC	Supercharger	Supercharger
SCB	Supercharger Bypass	E-ABV
SFI	Sequential Multiport Fuel Injection	Electronic Fuel Injection (EFI), Sequential Injection
SPL	Smoke Puff Limiter	-
SRI	Service Reminder Indicator	-
SRT	System Readiness Test	-
ST	Scan Tool	-
TB	Throttle Body	Throttle Body
TBI	Throttle Body Fuel Injection	Single Point Injection Central Fuel Injection (Ci)
TC	Turbocharger	Turbocharger
TCC	Torque Converter Clutch	Torque Converter

TCM	Transmission Control Module	Transmission ECU, ECT ECU
TP	Throttle Position	Throttle Position
TR	Transmission Range	-
TVV	Thermal Vacuum Valve	Bimetallic Vacuum Switching Valve (BVSV) Thermostatic Vacuum Switching Valve (TVSV)
TWC	Three-Way Catalytic Converter	Three-Way Catalytic (TWC) Manifold Converter CC_{RO}
TWC+OC	Three-Way + Oxidation Catalytic Converter	CC_R + CCo
VAF	Volume Air Flow	Air Flow Meter
VR	Voltage Regulator	Voltage Regulator
VSS	Vehicle Speed Sensor	Vehicle Speed Sensor
WOT	Wide Open Throttle	Full Throttle
WU-OC	Warm Up Oxidation Catalytic Converter	-
WU-TWC	Warm Up Three-Way Catalytic Converter	-
3GR	Third Gear	-
4GR	Fourth Gear	-

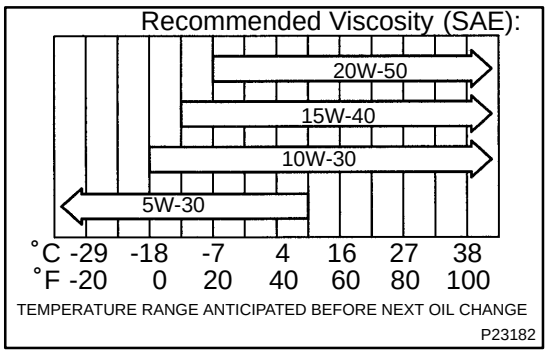

OIL AND FILTER

LU02K-03

INSPECTION

1. CHECK ENGINE OIL QUALITY

Check the oil for deterioration, entry of water, discoloring or thinning.

If the quality is visibly poor, replace the oil.

Oil grade:

API grade SH Energy-conserving ll or SJ, Energy-Conserving or ILSAC multigrade engine oil. Recommended viscosity is as shown in the illustration. If SAE 10W-30 or a higher viscosity engine oil is used in extremely low temperatures, the engine may become difficult to start, so SAE 5W-30 engine oil is recommended.

2. CHECK ENGINE OIL LEVEL

After warming up the engine and then 5 minutes after the engine stop, oil level should be between the ”L” and ”F” marks on the dipstick.

If low. check for leakage and add oil up to the ”F” mark.

NOTICE:

Do not fill with engine oil above the ”F” mark.

3. REMOVE OIL PRESSURE SWITCH, AND INSTALL OIL PRESSURE GAUGE

(a) Using SST, remove the oil pressure switch.
SST 09816-30010

(b) Install the oil pressure gauge.

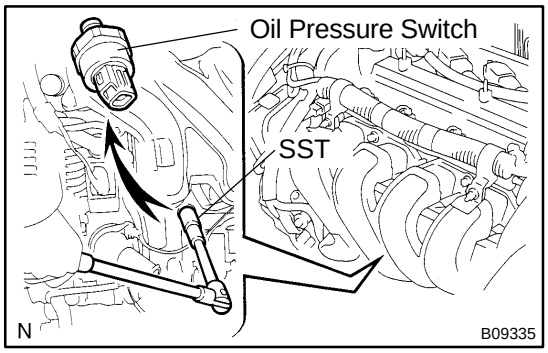

4. WARM UP ENGINE

Allow the engine to warm up to normal operating temperature.

5. CHECK OIL PRESSURE

Oil pressure:

At idle speed

29 kPa (0.3 kgf/cm^2, 4.3 psi) or more

At 3,000 rpm

150 - 550 kPa (1.5 - 5.6 kgf/cm^2, 22 - 80 psi)

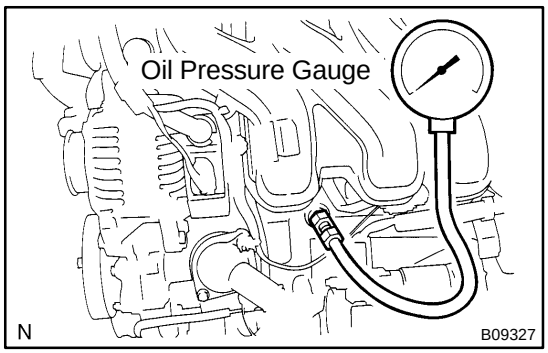

6. REMOVE OIL PRESSURE GAUGE AND REINSTALL OIL PRESSURE SWITCH

(a) Remove the oil pressure gauge.

(b) Apply adhesive to 2 or 3 threads of the oil pressure switch.

Adhesive:

Part No. 08833-00080, THREE BOND 1344, LOCTITE 242 or equivalent

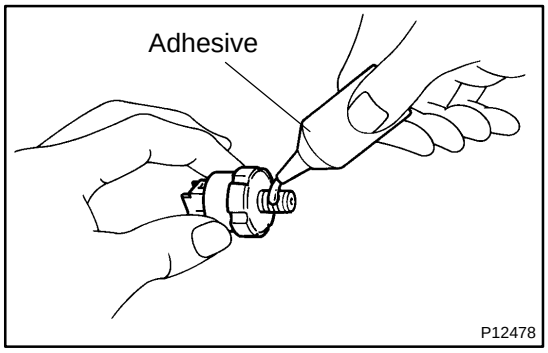

(c) Using SST, install the oil pressure switch.
SST 09816-30010

Torque: 13 N·m (130 kgf·cm, 9 ft·lbf)

7. START ENGINE AND CHECK FOR LEAKS

LU02L-03

REPLACEMENT

CAUTION:

- **Prolonged and repeated contact with mineral oil will result in the removal of natural fats from the skin, leading to dryness, irritation and dermatitis. In addition, used engine oil contains potentially harmful contaminants which may cause skin cancer.**
- **Exercise caution in order to minimize the length and frequency of contact of your skin to used oil. Wear protective clothing and gloves. Wash your skin thoroughly with soap and water, or use water-less hand cleaner, to remove any used engine oil. Do not use gasoline, thinners, or solvents.**
- **In order to preserve the environment, used oil and used oil filter must be disposed of only at designated disposal sites.**

1. DRAIN ENGINE OIL

(a) Remove the oil filter cap.

(b) Remove the oil drain plug, and drain the oil into a container.

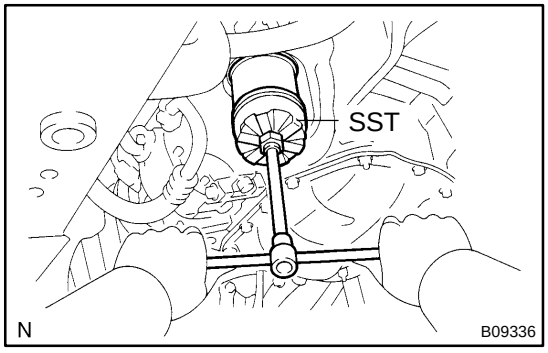

2. REPLACE OIL FILTER

(a) Using SST, remove the oil filter.
SST 09228-06501

(b) Check and clean the oil filter installation surface.

(c) Check the part number of the new oil filter is as same as old one.

(d) Apply clean engine oil to the gasket of a new oil filter.

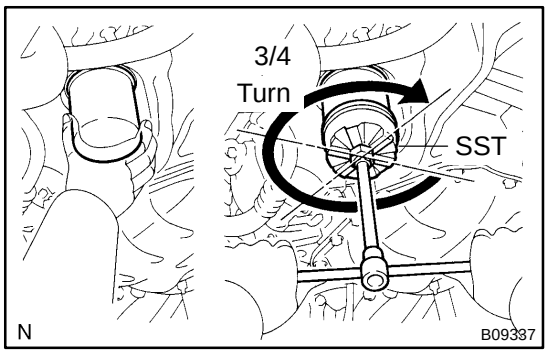

(e) Lightly screw the oil filter into place, and tighten it until the gasket contacts the seat.

(f) Using SST, tighten it an additional 3/4 turn.
SST 09228-06501

3. REFILL WITH ENGINE OIL

(a) Clean and install the oil drain plug with a new gasket.
Torque: 38 N·m (387 kgf·cm, 28 ft·lbf)

(b) Fill with fresh engine oil.
Capacity
Drain and refill:
w/ Oil filter change: 3.7 liters (3.9 US qts, 3.3 lmp. qts)
w/o Oil filter change: 3.4 liters (3.6 US qts, 3.0 lmp. qts)
Dry fill: 4.1 liters (4.3 US qts, 3.6 lmp. qts)

(c) Install the oil filter cap.

4. START ENGINE AND CHECK FOR OIL LEAKS

5. RECHECK ENGINE OIL LEVEL

OIL PUMP

COMPONENTS

LU02M-03

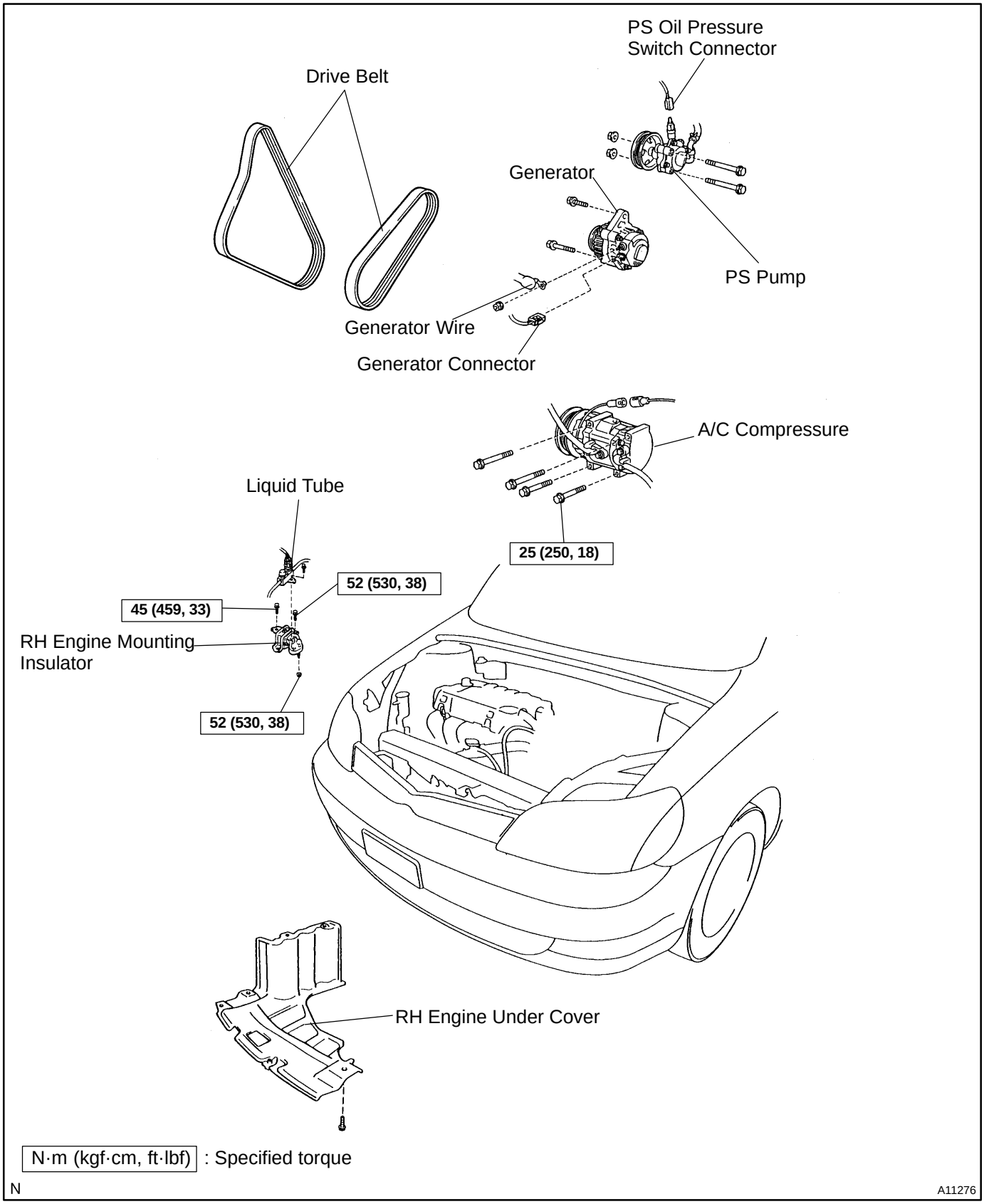

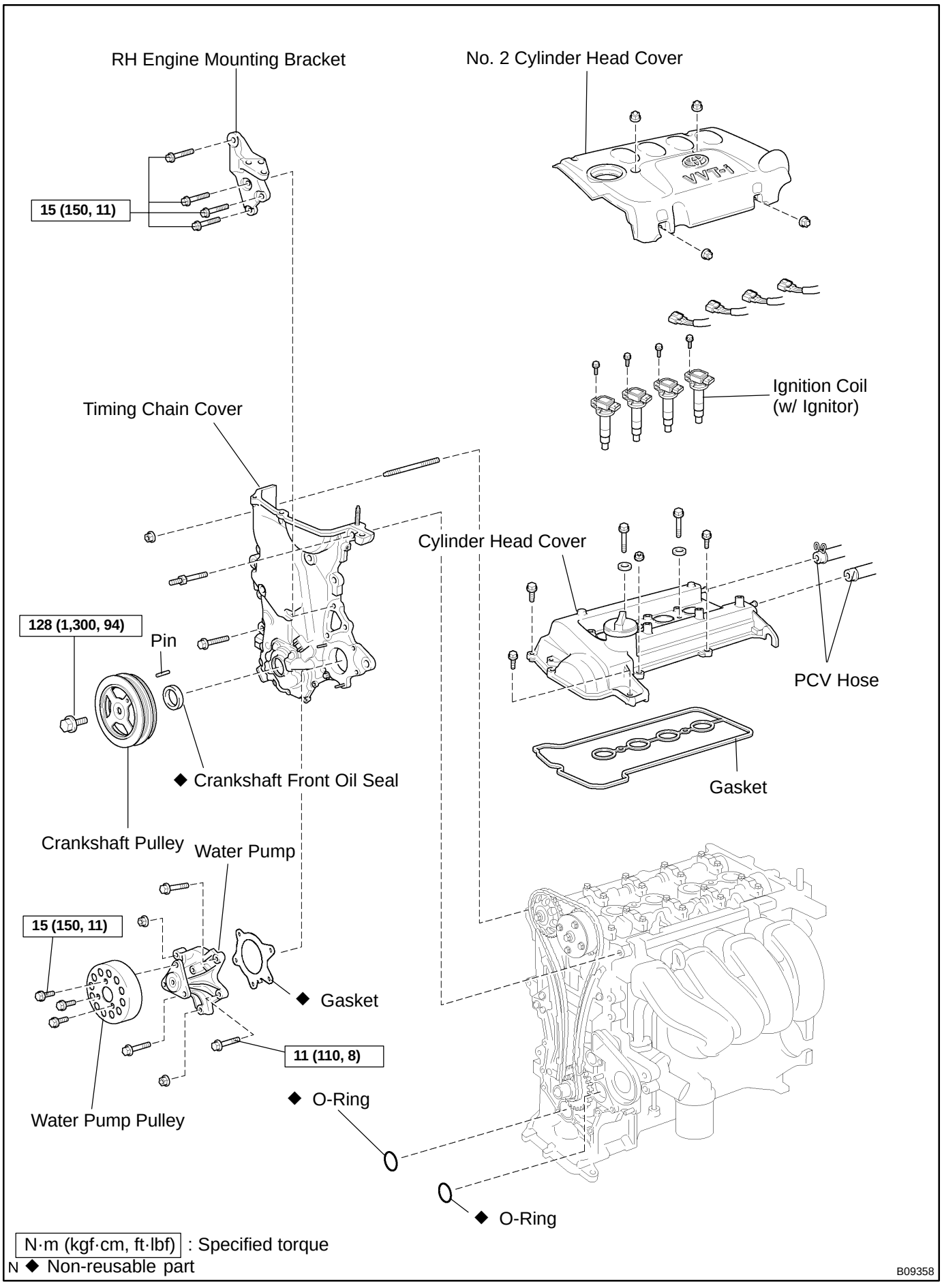
RH Engine Mounting Bracket
15 (150, 11)
No. 2 Cylinder Head Cover
Ignition Coil
(w/ Ignitor)
Timing Chain Cover
Cylinder Head Cover
128 (1,300, 94)
Pin
PCV Hose
◆ Crankshaft Front Oil Seal
Gasket
Crankshaft Pulley
Water Pump
15 (150, 11)
◆ Gasket
11 (110, 8)
◆ O-Ring
Water Pump Pulley
◆ O-Ring
N·m (kgf·cm, ft·lbf) : Specified torque
N ◆ Non-reusable part
B09358

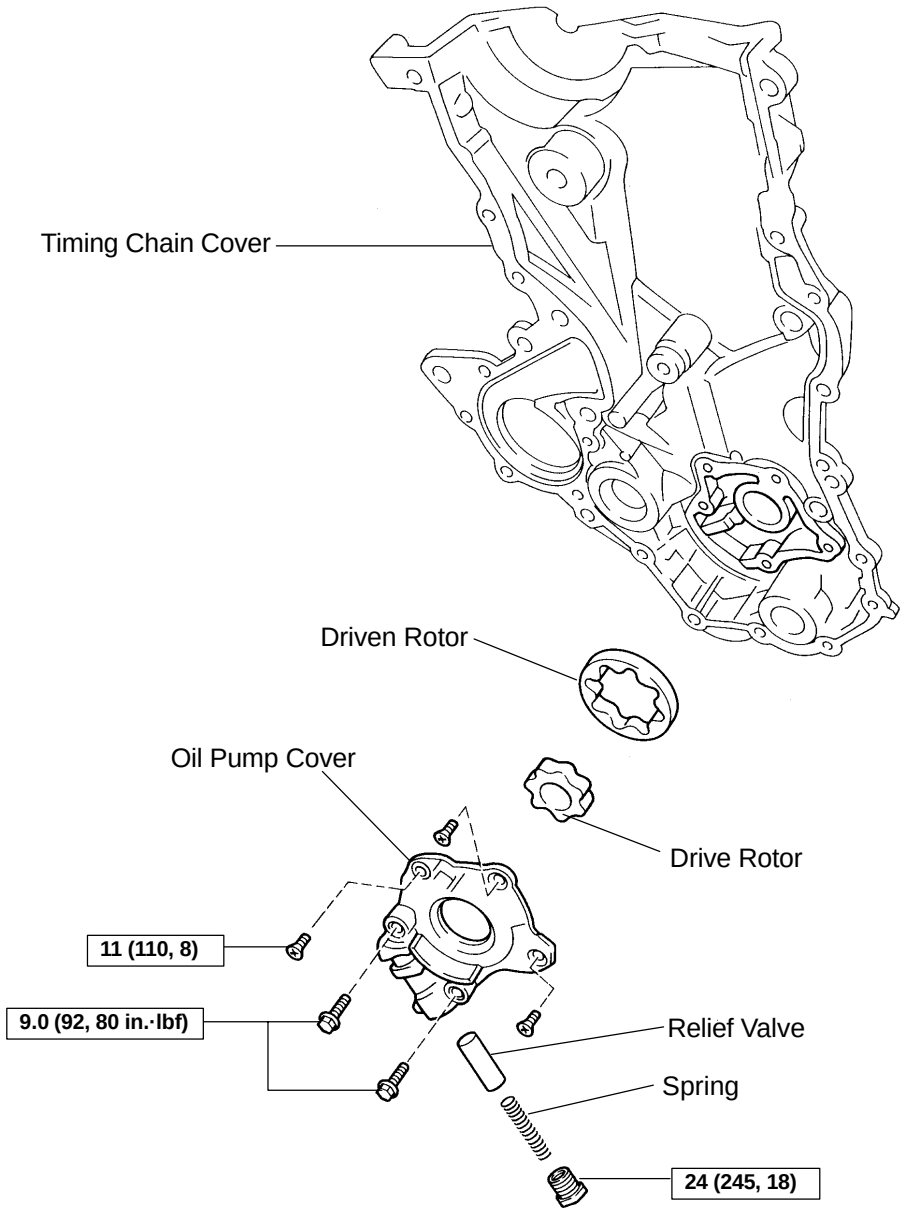

N N·m (kgf·cm, ft·lbf) : Specified torque

B09334

LU02O-03

DISASSEMBLY

REMOVE RELIEF VALVE

Remove the plug, spring and relief valve.

LU0IN-01

INSPECTION

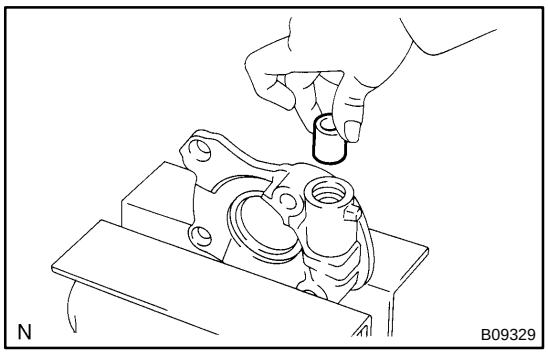

1. INSPECT RELIEF VALVE

Coat the valve with engine oil and check that it falls smoothly into the valve hole by its own weight.

If it does not, replace the relief valve. If necessary, replace the oil pump assembly.

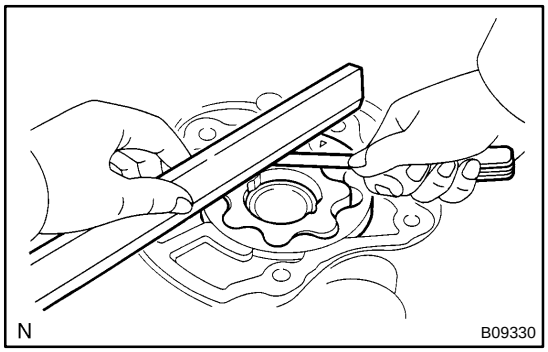

2. INSPECT ROTOR SIDE CLEARANCE

Using a feeler gauge and precision straight edge, measure the clearance between the rotors and precision straight edge.

Standard side clearance:
0.03 - 0.09 mm (0.0012 - 0.0035 in.)
Maximum side clearance:
0.15 mm (0.0059 in.)

If the side clearance is greater than maximum, replace the rotors as a set. If necessary, replace the oil pump assembly.

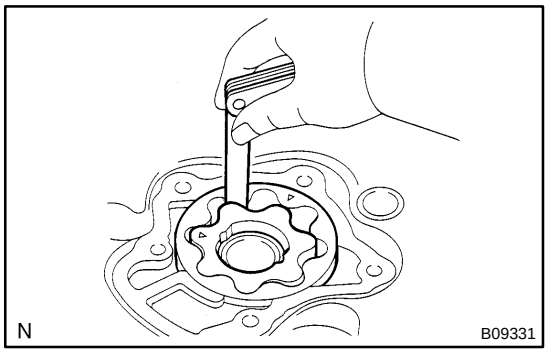

3. INSPECT ROTOR TIP CLEARANCE

Using a feeler gauge, measure the clearance between the drive and driven rotor tips.

Standard tip clearance:
0.060 - 0.180 mm (0.0024 - 0.0071 in.)
Maximum tip clearance:
0.28 mm (0.0110 in.)

If the tip clearance is greater than maximum, replace the rotors as a set.

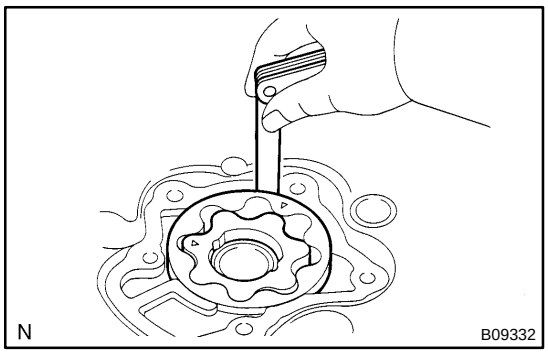

4. INSPECT ROTOR BODY CLEARANCE

Using a feeler gauge, measure the clearance between the driven rotor and body.

Standard body clearance:
0.250 - 0.325 mm (0.00984 - 0.01280 in.)
Maximum body clearance:
0.425 mm (0.01673 in.)

If the body clearance is greater than maximum, replace the rotors as a set. If necessary, replace the oil pump assembly.

LU0IP-01

INSTALLATION

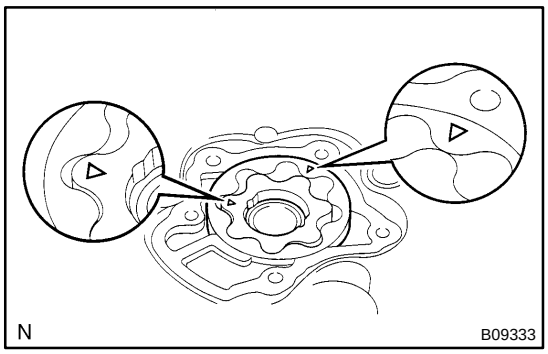

1. INSTALL OIL PUMP

(a) Place the drive and driven rotors into timing chain cover with the marks facing the oil pump cover side.

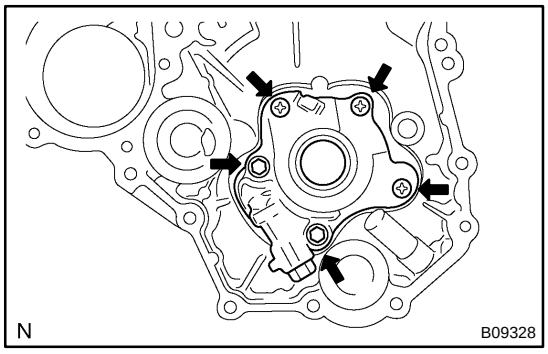

(b) Install the oil pump cover to the timing chain cover with the 2 bolts and 3 screws.

Torque:
Bolt 9.0 N·m (92 kgf·cm, 80 in.·lbf)
Screw 11 N·m (110 kgf·cm, 8 ft·lbf)

2. INSTALL TIMING CHAIN COVER (See pages EM-20)

3. FILL WITH ENGINE OIL

4. CHECK FOR LEAKS

LU0IO-01

REASSEMBLY

INSTALL RELIEF VALVE

Insert the relief valve and spring into the pump body hole, and install the plug.

Torque: 24 N·m (245 kgf·cm, 18 ft·lbf)

LU02N-03

REMOVAL

1. DRAIN ENGINE OIL

2. REMOVE TIMING CHAIN COVER (See pages EM-15)

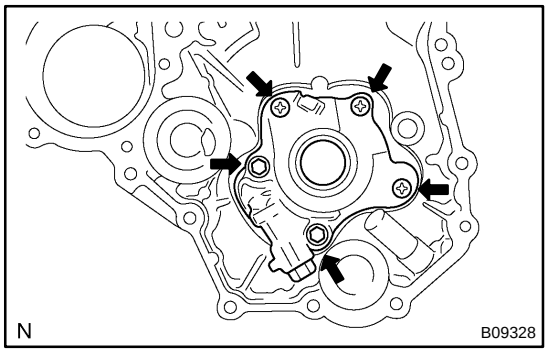

3. REMOVE OIL PUMP

(a) Remove the 2 bolts, 3 screws and oil pump cover from the timing chain cover.

(b) Remove the drive and driven rotors.

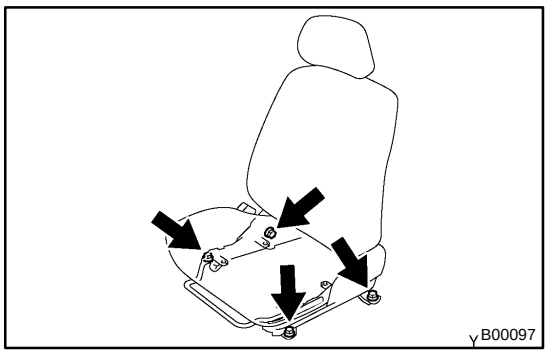

BODY

MA03O-02

INSPECTION

1. TIGHTEN BOLTS AND NUTS ON CHASSIS AND BODY

(a) Tighten these parts:

- Front seat mount bolts

Torque: 37 N·m (375 kgf·cm, 27 ft·lbf)

(b) Under Severe Conditions:

In addition to the above maintenance items, check for loose or missing nuts and bolts on the following:

- Steering system
- Drive train
- Suspension system
- Fuel tank mounts
- Engine mounts, etc.

2. FINAL INSPECTION

(a) Check the operation of the body parts:

- Hood:
  Auxiliary catch operate properly
  Hood locks securely when closed
- Front and rear doors:
  Door lock operates properly
  Doors close properly
- Luggage compartment door and back door:
  Door lock operates properly
- Seats:
  Seat adjusts easily and locks securely in any position
  Front seat back locks securely in any position
  Folding-down rear seat backs lock securely

(b) Road test:

- Check the engine and chassis for abnormal noises.
- Check that the vehicle does not wander or pull to one side.
- Check that the brake work properly and do not drag.

(c) Be sure to deliver a clean car. Especially check:

- Steering wheel
- Shift lever knob
- All switch knobs
- Door handles
- Seats

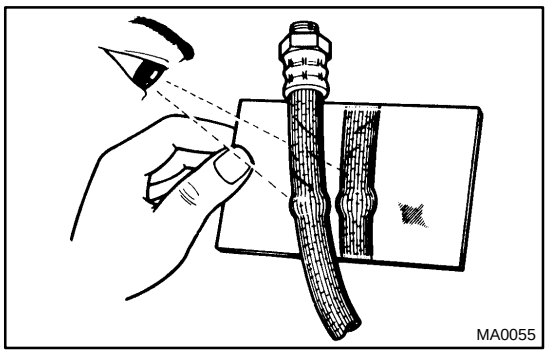

BRAKE

MA00S-06

INSPECTION

1. INSPECT BRAKE LINE PIPES AND HOSES

HINT:

Check in a well lighted area. Check the entire circumference and length of the brake hoses using a mirror as required. Turn the front wheels fully right or left before checking the front brake.

(a) Check all brake lines and hoses for:
- Damage
- Wear
- Deformation
- Cracks
- Corrosion
- Leaks
- Bends
- Twists

(b) Check all clamps for tightness and connections for leakage.

(c) Check that the hoses and lines are clear of sharp edges, moving parts and the exhaust system.

(d) Check that the lines installed in grommets pass through the center of the grommets.

2. INSPECT FRONT BRAKE PADS AND DISCS

(See page BR-24)

HINT:

If a squealing or scraping noise comes from the brake during, check the pad wear indicator to see if it is contacting the disc rotor. If so, the disc pad should be replaced.

3. INSPECT BRAKE LININGS AND DRUMS

(See page BR-30)

CHASSIS

MA00T-03

INSPECTION

1. INSPECT STEERING LINKAGE

(a) Check the steering wheel freeplay (See page SR-8)

(b) Check the steering linkage for looseness or damage.

Check that:

- Tie rod ends do not have excessive play.
- Dust seals and boots are not damaged.
- Boot clamps are not loose.

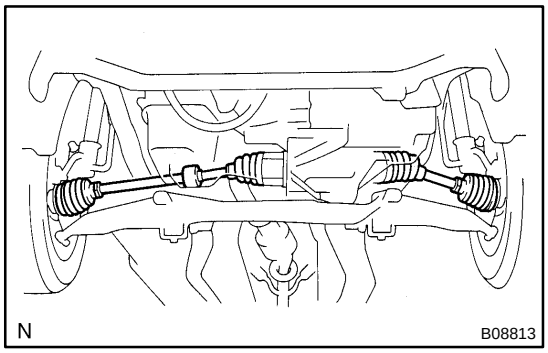

2. INSPECT SRS AIRBAG (See page RS-2)

3. INSPECT STEERING GEAR HOUSING OIL

Check the steering gear housing for oil leakage.

4. INSPECT DRIVE SHAFT BOOTS

Check the drive shaft boots for clamp looseness, leakage or damage.

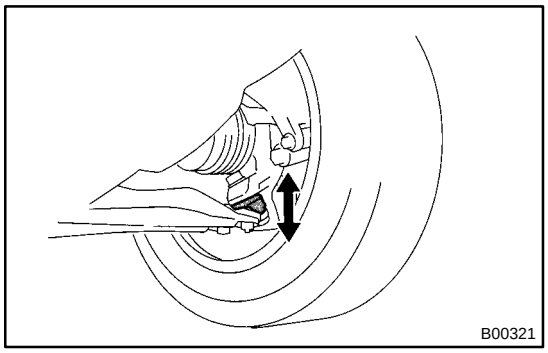

5. INSPECT BALL JOINT AND DUST COVERS

(a) Inspect the ball joints for excessive looseness.

- Jack up the front of the vehicle and place wooden blocks with a height of 180 - 200 mm (7.09 - 7.87 in.) under the front tires.
- Lower the jack until there is about half a load on the front coil spring. Place stands under the vehicle for safety.
- Check that the front wheels are pointing straight ahead, and block them with chocks.
- Using a lever, pry up the end of the lower arm, and check the amount of play.

Maximum ball joint vertical play: 0 mm (0 in.)

If there is play, replace the ball joint.

(b) Check the dust cover for damage.

6. CHECK TRANSAXLE OIL (FLUID)

Visually check the transaxle for oil (fluid) leakage.

If leakage is found, check for the cause and repair.

7. REPLACE TRANSAXLE FLUID

(a) M/T:

Replace transaxle oil (See page MX-4).

(b) A/T:

Replace transaxle (transmission) fluid (see page DI-149).

ENGINE

MA00R-07

INSPECTION

HINT:

Inspect these items when the engine is cold.

1. **INSPECT DRIVE BELT**
   (See page CH-2)
2. **REPLACE SPARK PLUGS**
   (See page IG-1)

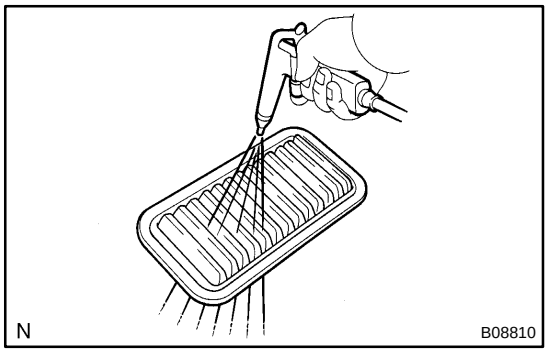

3. **INSPECT AIR FILTER**

(a) Visually check that the air filter is not excessively dirty or oily.

HINT:

Oiliness may indicate a stuck PCV valve.

If necessary, replace the air cleaner element.

(b) Clean the air filter with compressed air.
First blow from the inside thoroughly, then blow off the outside of the element.

4. **REPLACE AIR FILTER**

Replace the air filter with a new one.

5. **REPLACE ENGINE OIL AND OIL FILTER**
   (See page LU-2)
6. **REPLACE ENGINE COOLANT**
   (See page CO-2)
7. **INSPECT CHARCOAL CANISTER**
   (Se page EC-5)
8. **REPLACE GASKET IN FUEL TANK CAP**
   (See page SF-27)
9. **INSPECT FUEL LINES AND CONNECTIONS**
   (See page SF-27)
10. **INSPECT EXHAUST PIPES AND MOUNTINGS**
    (See page EC-1 1)
11. **ADJUST VALVE CLEARANCE**
    (See page EM-5)

INSIDE VEHICLE

MA002-10

GENERAL MAINTENANCE

These are maintenance and inspection items which are considered to be the owner's responsibility. They can be done by the owner or they can have them done at a service shop.
These items include those which should be checked on a daily basis, those which, in most cases, do not require (special) tools and those which are considered to be reasonable for the owner to do.
Items and procedures for general maintenance are as follows.

1. GENERAL NOTES

- Maintenance items may vary from country to country. Check the owner's manual supplement in which the maintenance schedule is shown.
- Every service item in the periodic maintenance schedule must be performed.
- Periodic maintenance service must be performed according to whichever interval in the periodic maintenance schedule occurs first, the odometer reading (miles) or the time interval (months).
- Maintenance service after the last period should be performed at the same interval as before unless otherwise noted.
- Failure to do even one item an cause the engine to run poorly and increase exhaust emissions.

2. LIGHTS

(a) Check that the headlights, stop lights, taillights, turn signal lights, and other lights are all working.
(b) Check the headlight aim.

3. WARNING LIGHTS AND BUZZERS

Check that all warning lights and buzzers function properly.

4. HORN

Check that it is working.

5. WINDSHIELD GLASS

Check for scratches, pits or abrasions.

6. WINDSHIELD WIPER AND WASHER

(a) Check operation of the wipers and washer.
(b) Check that the wipers do not streak.

7. WINDSHIELD DEFROSTER

Check that air comes out from the defroster outlet when operating the heater or air conditioner at defroster mode.

8. REAR VIEW MIRROR

Check that it is mounted securely.

9. SUN VISORS

Check that they move freely and are mounted securely.

10. STEERING WHEEL

Check that it has the specified freeplay. Be alert for changes in steering condition, such as hard steering, excessive freeplay or strange noises.

11. SEATS

(a) Check that the seat adjusters operate smoothly.
(b) Check that all latches lock securely in any position.
(c) Check that the head restraints move up and down smoothly and that the locks hold securely in any latch position.
(d) For fold-down seat backs, check that the latches lock securely.

12. SEAT BELTS

(a) Check that the seat belt system such as the buckles, retractors and anchors operate properly and smoothly.
(b) Check that the belt webbing is not cut, frayed, worn or damaged.

13. ACCELERATOR PEDAL

Check the pedal for smooth operation and uneven pedal effort or catching.

14. CLUTCH PEDAL (See page CL-2)

(a) Check the pedal for smooth operation.

(b) Check that the pedal has the proper freeplay.

15. BRAKE PEDAL (See page BR-6)

(a) Check the pedal for smooth operation.

(b) Check that the pedal has the proper reserve distance and freeplay.

(c) Check the brake booster function.

16. BRAKES

At a safe place, check that the brakes do not pull to one side when applied.

17. PARKING BRAKE (See page BR-9)

(a) Check that the lever has the proper travel.

(b) On a safe incline, check that the vehicle is held securely with only the parking brake applied.

18. AUTOMATIC TRANSMISSION ”PARK” MECHANISM

(a) Check the lock release button of the selector lever for proper and smooth operation.

(b) On a safe incline, check that the vehicle is held securely with the selector lever in the ”P” position and all brakes released.

OUTSIDE VEHICLE

MA001-04

GENERAL MAINTENANCE

These are maintenance and inspection items which are considered to be the owner's responsibility. They can be done by the owner or they can have them done at a service shop.
These items include those which should be checked on a daily basis, those which, in most cases, do not require (special) tools and those which are considered to be reasonable for the owner to do.
Items and procedures for general maintenance are as follows.

1. GENERAL NOTES

- Maintenance items may vary from country to country. Check the owner's manual supplement in which the maintenance schedule is shown.
- Every service item in the periodic maintenance schedule must be performed.
- Periodic maintenance service must be performed according to whichever interval in the periodic maintenance schedule occurs first, the odometer reading (miles) or the time interval (months).
- Maintenance service after the last period should be performed at the same interval as before unless otherwise noted.
- Failure to do even one item an cause the engine to run poorly and increase exhaust emissions.

2. TIRES

(a) Check the pressure with a gauge. If necessary, adjust.
(b) Check for cuts, damage or excessive wear.

3. WHEEL NUTS

When checking the tires, check the nuts for looseness or for missing nuts. If necessary, tighten them.

4. TIRE ROTATION

Check the owner's manual supplement in which the maintenance schedule is shown.

5. WINDSHIELD WIPER BLADES

Check for wear or cracks whenever they do not wipe clean. If necessary, replace.

6. FLUID LEAKS

(a) Check underneath for leaking fuel, oil, water or other fluid.
(b) If you smell gasoline fumes or notice any leak, have the cause found and corrected.

7. DOORS AND ENGINE HOOD

(a) Check that all doors and the tailgate operate smoothly, and that all latches lock securely.
(b) Check that the engine hood secondary latch secures the hood from opening when the primary latch is released.

UNDER HOOD

MA003-36

GENERAL MAINTENANCE

1. GENERAL NOTES

- Maintenance items may vary from country to country. Check the owner's manual supplement in which the maintenance schedule is shown.
- Every service item in the periodic maintenance schedule must be performed.
- Periodic maintenance service must be performed according to whichever interval in the periodic maintenance schedule occurs first, the odometer reading (miles) or the time interval (months).
- Maintenance service after the last period should be performed at the same interval as before unless otherwise noted.
- Failure to do even one item an cause the engine to run poorly and increase exhaust emissions.

2. WINDSHIELD WASHER FLUID

Check that there is sufficient fluid in the tank.

3. ENGINE COOLANT LEVEL

Check that the coolant level is between the "FULL" and "LOW" lines on the see-through reservoir.

4. RADIATOR AND HOSES

(a) Check that the front of the radiator is clean and not blocked with leaves, dirt or bugs.
(1NZ-FE engine: See page CO-1 1)

(b) Check the hoses for cracks, kinks, rot or loose connections.

5. BATTERY ELECTROLYTE LEVEL

Check that the electrolyte level of all battery cells is between the upper and lower level lines on the case.

6. BRAKE AND CLUTCH FLUID LEVELS

Check that the brake and clutch fluid levels are near the upper level line on the see-through reservoirs.

7. ENGINE DRIVE BELTS

Check drive belt for fraying, cracks, wear or oiliness.

8. ENGINE OIL LEVEL

Check the level on the dipstick with the engine turned off.

9. POWER STEERING FLUID LEVEL

- Check the level.
- The level should be in the "HOT" or "COLD" range depending on the fluid temperature.

10. AUTOMATIC TRANSMISSION FLUID LEVEL

(a) Park the vehicle on a level surface.

(b) With the engine idling and the parking brake applied, shift the selector into all positions from "P" to "L", and then shift into "P" position.

(c) Pull out the dipstick and wipe off the fluid with a clean rag. Re-insert the dipstick and check that the fluid level is in the HOT range.

(d) Do this check with the fluid at normal driving temperature (70 - 80˚C, 158 - 176˚F).

HINT:

Wait until the engine cools down (approx. 30 min.) before checking the fluid level after extended driving at high speeds in hot weather, in heavy traffic or pulling a trailer.

11. EXHAUST SYSTEM

Visually inspect for cracks, holes or loose supports.

If any change in the sound of the exhaust or smell of the exhaust fumes is noticed, have the cause located and corrected.

DIFFERENTIAL CASE

COMPONENTS

MX078-04

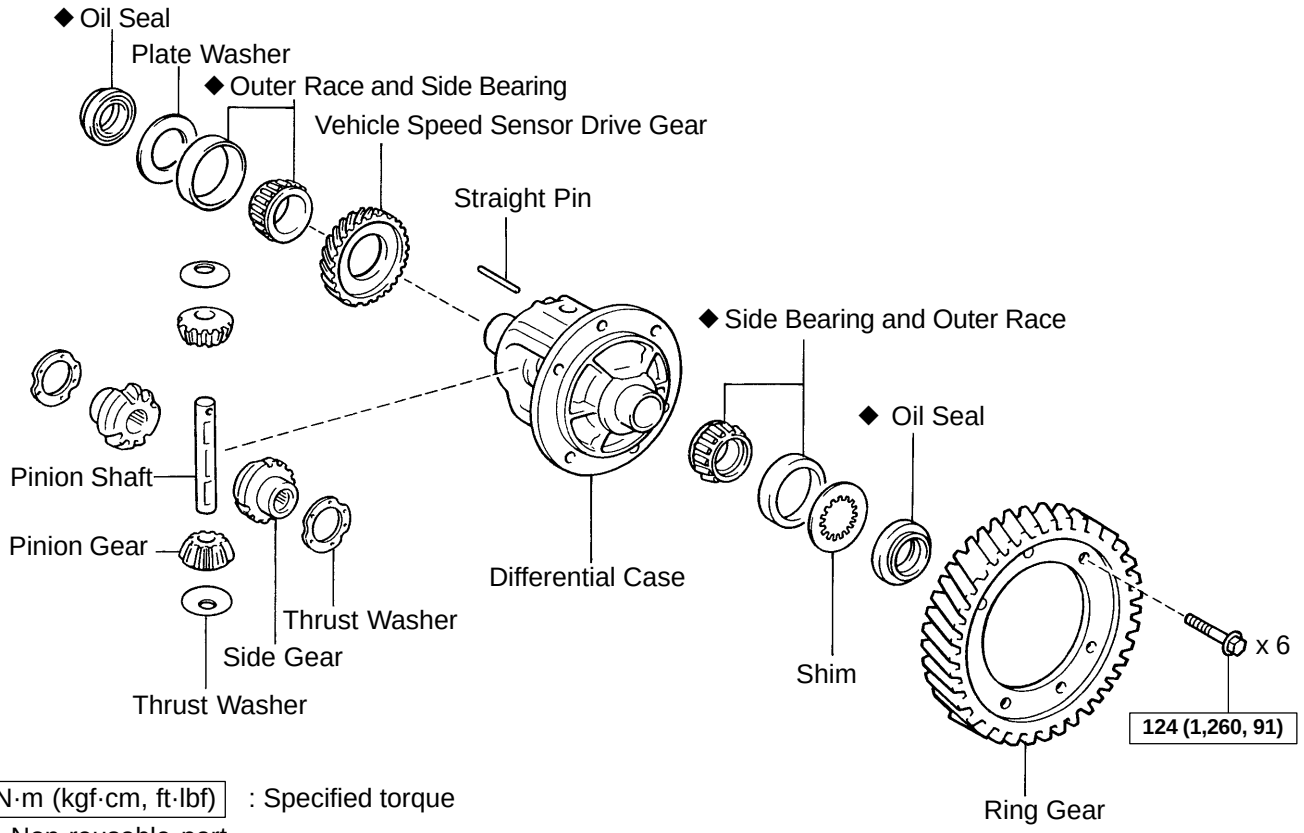

MX079-04

DISASSEMBLY

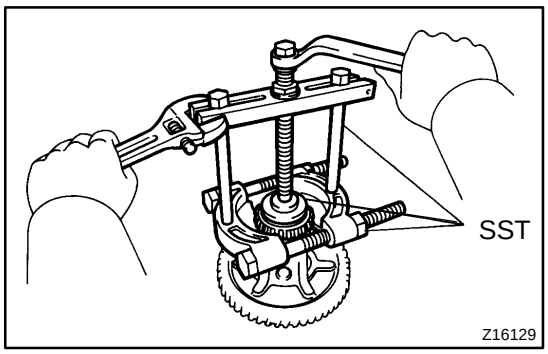

1. REMOVE SIDE BEARING FROM DIFFERENTIAL CASE

(a) Using SST, remove the bearings from both sides of the differential case.
SST 09950- 00020, 09950- 00030, 09950- 60010 (09951-00360)

(b) Remove the vehicle speed sensor drive gear from the RH side.

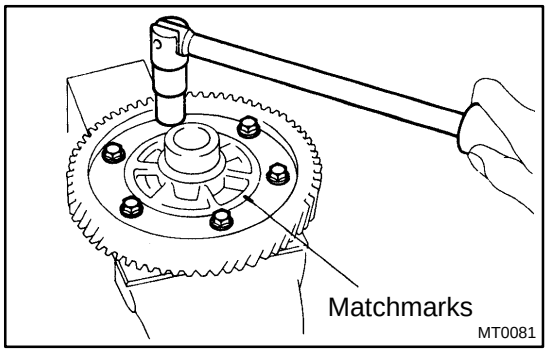

2. REMOVE RING GEAR

(a) Place matchmarks on the ring gear and differential case.

(b) Remove the 6 bolts.

(c) Using a plastic hammer, tap on the ring gear to remove it from the differential case.

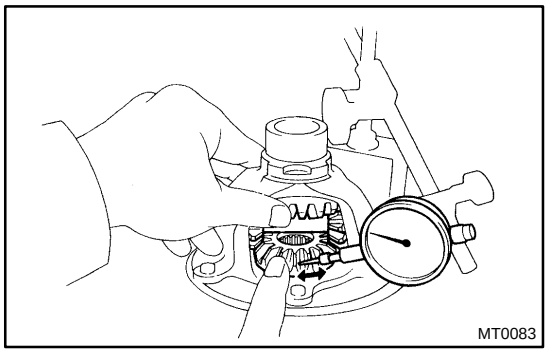

3. INSPECT SIDE GEAR BACKLASH

Using a dial indicator, measure the backlash of one side gear while holding one pinion toward the differential case.

Standard backlash:
0.05 - 0.20 mm (0.0020 - 0.0079 in.)

If the backlash is not within the specification, install the correct thrust washer to the side gears.

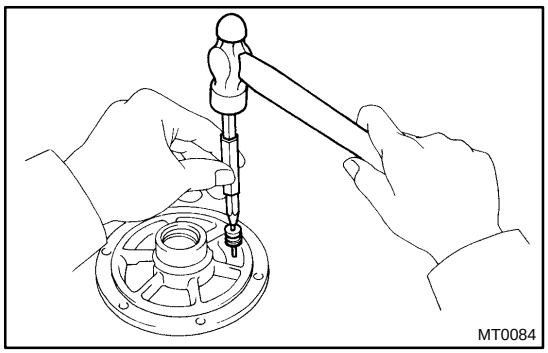

4. DISASSEMBLE DIFFERENTIAL CASE

(a) Using a pin punch and hammer, drive out the straight pin.

(b) Remove the pinion shaft from the differential case.

(c) Remove the 2 pinion gears and side gears with the 4 thrust washers from each gear.

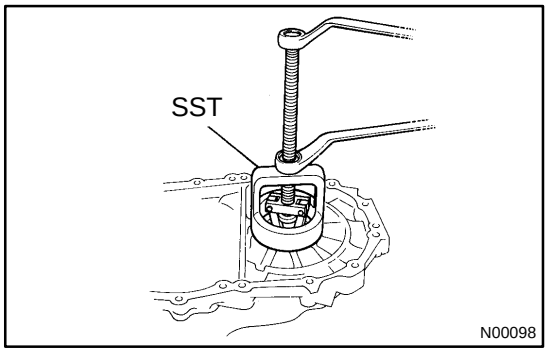

5. Transmission case side:
IF NECESSARY, REPLACE OIL SEAL AND SIDE BEARING OUTER RACE

(a) Using a screwdriver and hammer, drive out the oil seal.

(b) Using SST, pull out the outer race and shim.
SST 09612-65014

(c) Place the shim into the differential case.

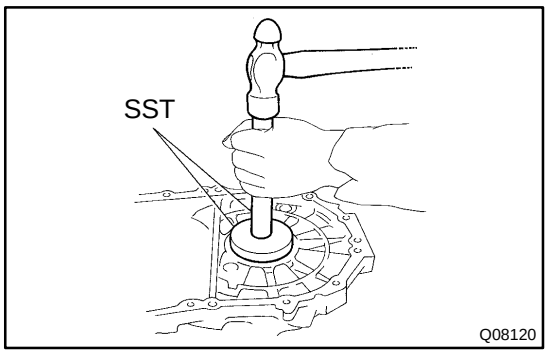

(d) Using SST and a hammer, drive in a new outer race.
SST 09950- 60020 (09951- 00710), 09950- 70010 (09951-07150)

NOTICE:
When replacing the side bearing outer race, replace the side bearing along with it.

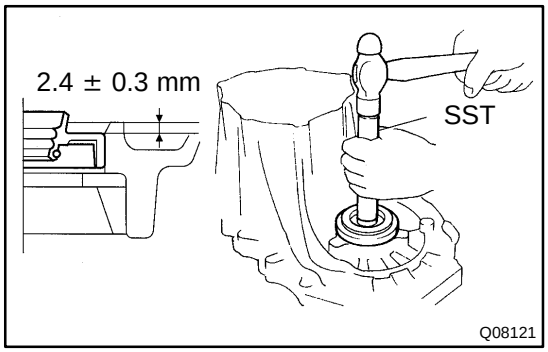

(e) Using SST and a hammer, drive in a new oil seal.
SST 09350- 32014 (09351- 32111), 09950- 70010 (09951-07150)
Drive in depth: 2.4 ± 0.3 mm (0.094 ± 0.012 in.)

(f) Coat the lip of the oil seal with MP grease.

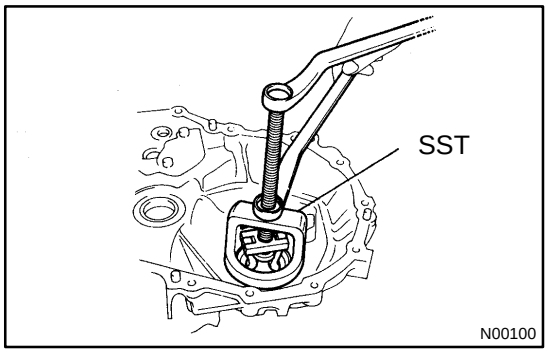

6. Transaxle case side:
IF NECESSARY, REPLACE OIL SEAL AND SIDE BEARING OUTER RACE

(a) Using a screwdriver and hammer, drive out the oil seal.

(b) Using SST, pull out the outer race and plate washer.
SST 09612-65014

(c) Place the plate washer into the differential case.

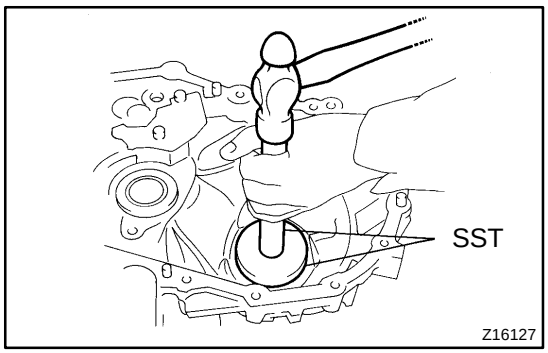

(d) Using SST and a hammer, drive in a new outer race.
SST 09950- 60020 (09951- 00680), 09950- 70010 (09951-07150)

NOTICE:
When replacing the side bearing outer race, replace the side bearing along with it.

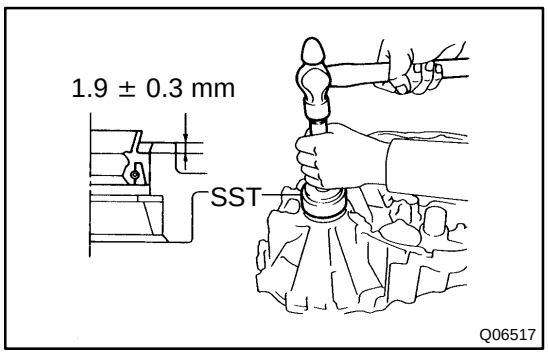

(e) Using SST and a hammer, drive in a new oil seal.
SST 09350-32014 (09351-32130, 09351-32150)
Drive in depth: 1.9 ± 0.3 mm (0.075 ± 0.012 in.)

(f) Coat the lip of the oil seal with MP grease.

MX07A-05

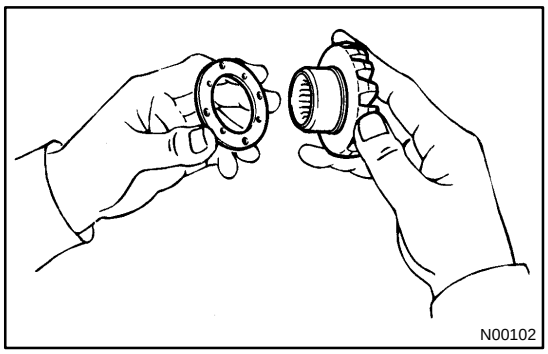
N00102

REASSEMBLY

1. ASSEMBLE DIFFERENTIAL CASE

(a) Install the correct thrust washers and side gears.
Refer to the table below, select thrust washers which will ensure that the backlash is within the specification. Try to select washers of the same size for both sides.
Standard backlash:
0.05 - 0.20 mm (0.0020 - 0.0079 in.)

Thickness mm (in.)	Thickness mm (in.)
1.50 (0.0591)	1.65 (0.0650)
1.55 (0.0610)	1.70 (0.0669)
1.60 (0.0630)	1.75 (0.0689)

(b) Install the thrust washers and side gears in the differential case.
(c) Install the pinion shaft.

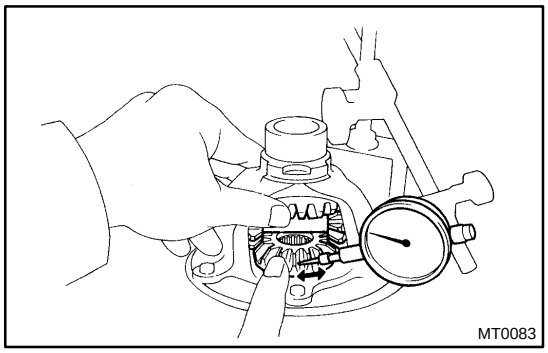
MT0083

(d) Using a dial indicator, check the side gear backlash.
Measure the side gear backlash while holding one pinion gear toward the differential case.
Standard backlash:
0.05 - 0.20 mm (0.0020 - 0.0079 in.)

If the backlash is not within the specification, install a thrust washer of different thickness.
(e) Using a pin punch and hammer, drive in the straight pin through the differential case and hole in the pinion shaft.
(f) Using a chisel and hammer, caulk the pin holes around the circumference of the differential case.

2. INSTALL RING GEAR ON DIFFERENTIAL CASE

(a) Clean the contact surface of the differential case.
(b) Heat the ring gear in boiling water.
(c) Carefully remove the ring gear from the water.
(d) After the moisture on the ring gear has completely evaporated, quickly install the ring gear to the differential case.

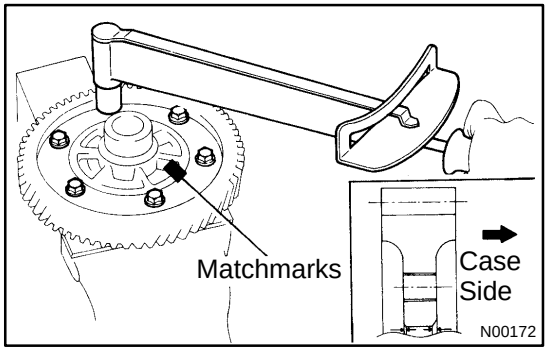

N00172

HINT:
Align the matchmarks on the differential case and contact the ring gear.
(e) Install the 6 set bolts. Tighten each set bolt uniformly, a little at a time in succession. Torque the bolts.
Torque: 124 N·m (1,260 kgf·cm, 91 ft·lbf)

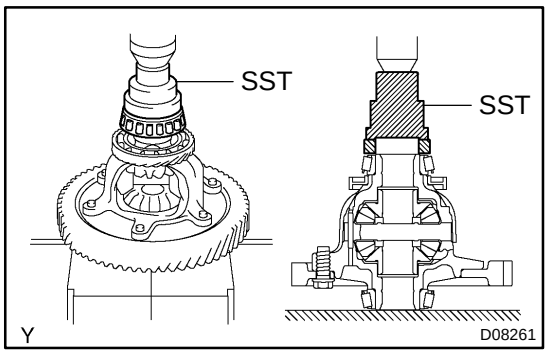

3. INSTALL SIDE BEARING

(a) Install the vehicle speed sensor drive gear to the RH side.

(b) Using SST and a press, install new side bearings to the both sides of the differential case.

SST 09350-32014 (09351-32090, 09351-32120)

NOTICE:

When replacing the side bearing outer race, replace the side bearing along with it.

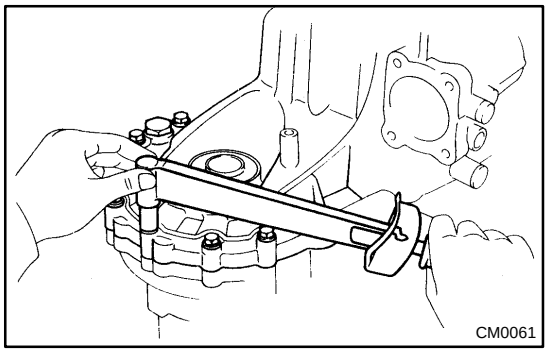

4. INSPECT DIFFERENTIAL SIDE BEARING PRELOAD

NOTICE:

Perform this only when replacing the side bearing and outer race of the differential case.

(a) Install the differential case assembly to the transaxle case.

(b) Install the transmission case.

(c) Install and torque the case bolts.

Torque: 29 N·m (300 kgf·cm, 22 ft·lbf)

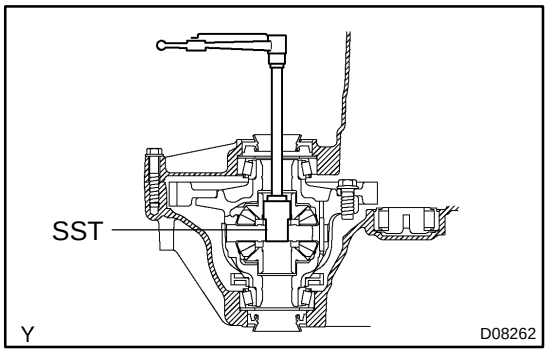

(d) Using SST and a torque wrench, turn the differential case assembly right and left 2 or 3 times to allow the bearings to settle.

SST 09564-3201 1

(e) Using SST and a torque wrench, measure the preload.

SST 09564-3201 1

Preload (at starting):

New bearing

0.8 - 1.6 N·m (8 - 16 kgf·cm, 6.9 - 13.9 in.·lbf)

Reused bearing

0.5 - 1.0 N·m (5 - 10 kgf·cm, 4.3 - 8.7 in.·lbf)

If the preload is not within the specification, remove the transmission case side outer race of the side bearing with SST (See page MX-39).

(f) Select an appropriate shim.

HINT:
The preload will change by about 0.3 - 0.4 N·m (3 - 4 kgf·cm, 2.6 - 3.5 in.·lbf) corresponding to a change of 0.05 mm (0.0020 in.) in shim thickness.

Mark	Thickness mm (in.)	Mark	Thickness mm (in.)
AA	2.10 (0.0827)	LL	2.60 (0.1024)
BB	2.15 (0.0846)	MM	2.65 (0.1043)
CC	2.20 (0.0866)	NN	2.70 (0.1063)
DD	2.25 (0.0886)	PP	2.75 (0.1083)
EE	2.30 (0.0906)	QQ	2.80 (0.1102)
FF	2.35 (0.0925)	RR	2.85 (0.1122)
GG	2.40 (0.0945)	SS	2.90 (0.1142)
HH	2.45 (0.0965)	TT	2.95 (0.1161)
JJ	2.50 (0.0984)	UU	3.00 (0.1181)
KK	2.55 (0.1004)	-	-

INPUT SHAFT

COMPONENTS

MX06Z-03

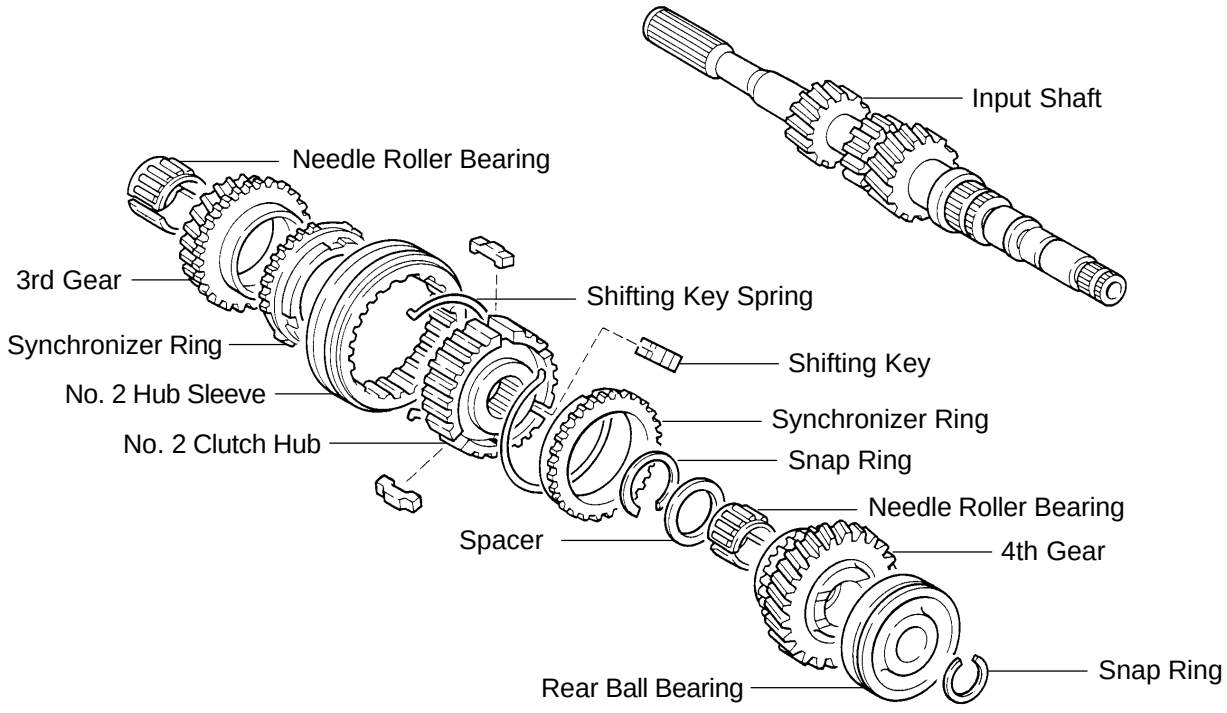

MX070-03

DISASSEMBLY

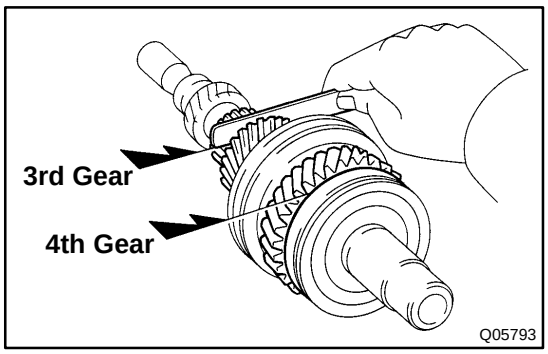

1. INSPECT 3RD AND 4TH GEARS THRUST CLEARANCE

Using a feeler gauge, measure the thrust clearance.

Standard clearance:
3rd gear: 0.10 - 0.35 mm (0.0039 - 0.0138 in.)
4th gear: 0.10 - 0.55 mm (0.0039 - 0.0217 in.)
Maximum clearance:
3rd gear: 0.35 mm (0.0138 in.)
4th gear: 0.55 mm (0.0217 in.)

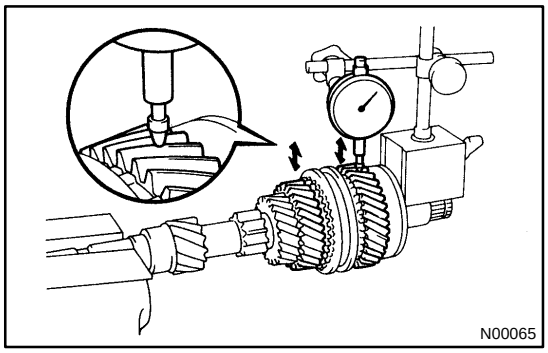

2. INSPECT 3RD AND 4TH GEARS RADIAL CLEARANCE

Using a dial indicator, measure the radial clearance between the gear and shaft.

Standard clearance:
KOYO made:
0.015 - 0.058 mm (0.0006 - 0.0023 in.)
NSK made:
0.015 - 0.056 mm (0.0006 - 0.0022 in.)
Maximum clearance:
KOYO made: 0.058 mm (0.0023 in.)
NSK made: 0.056 mm (0.0022 in.)

If the clearance exceeds the maximum, replace the gear, needle roller bearing or shaft.

3. REMOVE SNAP RING

Using 2 screwdrivers and a hammer, tap out the snap ring.

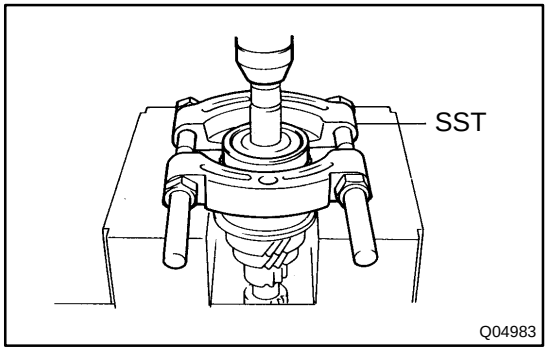

4. REMOVE REAR BALL BEARING, 4TH GEAR, NEEDLE ROLLER BEARING, SPACER AND SYNCHRONIZER RING FROM INPUT SHAFT

(a) Using SST and a press, remove the rear ball bearing and 4th gear.
SST 09950-00020

(b) Remove the needle roller bearings, spacer and synchronizer ring.

5. REMOVE SNAP RING

Using 2 screwdrivers and a hammer, tap out the snap ring.

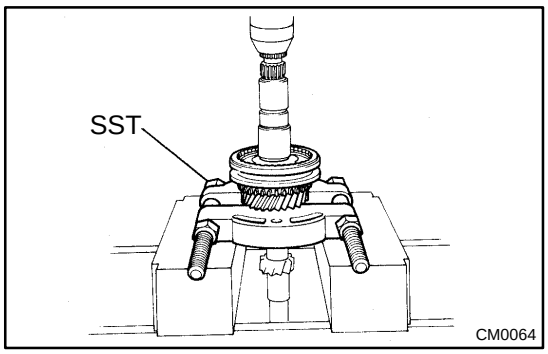

6. REMOVE NO. 2 HUB SLEEVE ASSEMBLY, 3RD GEAR, SYNCHRONIZER RING AND NEEDLE ROLLER BEARING

(a) Using SST and a press, remove the No. 2 hub sleeve assembly, 3rd gear and synchronizer ring.
SST 09950-00020

(b) Remove the needle roller bearings.

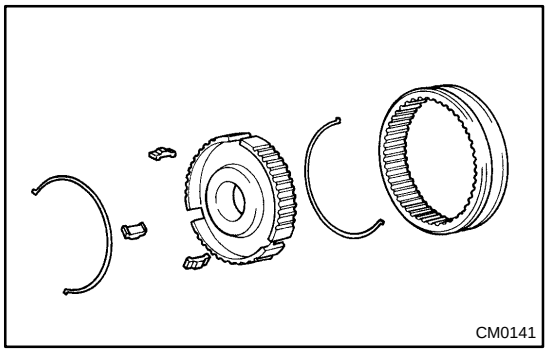

7. DISASSEMBLE NO. 2 HUB SLEEVE ASSEMBLY

(a) Using a screwdriver, remove the 2 shifting key springs and 3 shifting keys from the No. 2 clutch hub.

(b) Remove the No. 2 hub sleeve from the No. 2 clutch hub.

MX071-03

INSPECTION

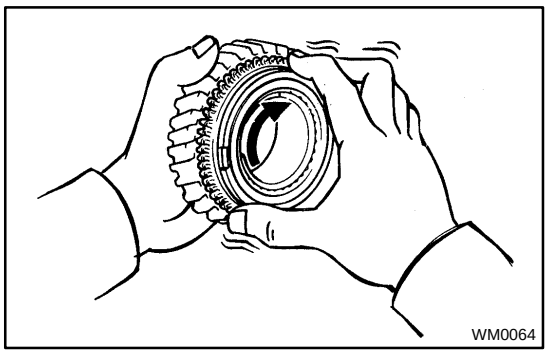
WM0064

1. INSPECT SYNCHRONIZER RING

(a) Check for wear or damage.

(b) Check the braking effect of the synchronizer ring. Turn the synchronizer ring in one direction while pushing it to the gear cone. Check that the ring locks.

If the braking effect is insufficient, apply a small amount of the fine lapping compound between the synchronizer ring and gear cone. Lightly rub the synchronizer ring and gear cone together.

NOTICE:

Ensure the fine lapping compound is completely washed off after rubbing.

(c) Check again the braking effect of the synchronizer ring.

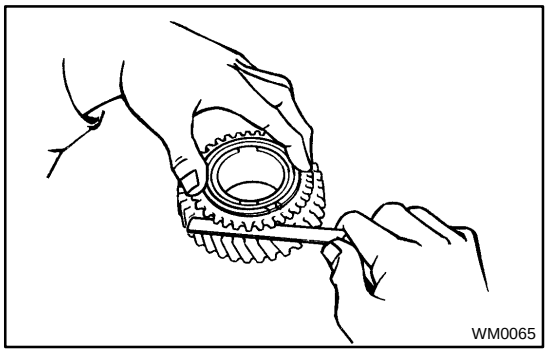
WM0065

(d) Using a feeler gauge, measure the clearance between the synchronizer ring back and gear spline end.

Minimum clearance: 0.75 mm (0.0295 in.)

If the clearance is less than the minimum, replace the synchronizer ring and apply a small amount of the fine lapping compound on gear cone.

NOTICE:

Ensure the fine lapping compound is completely washed off after rubbing.

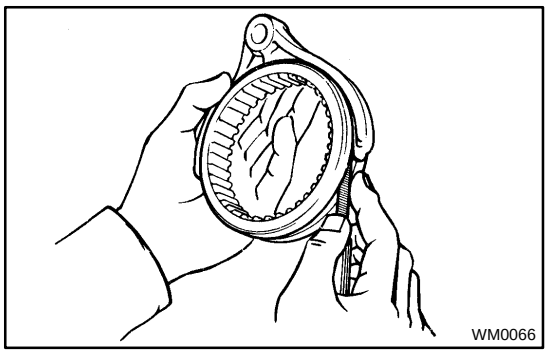
WM0066

2. INSPECT SHIFT FORK AND HUB SLEEVE CLEARANCE

Using a feeler gauge, measure the clearance between the hub sleeve and shift fork.

Maximum clearance: 0.35 mm (0.014 in.)

If the clearance exceeds the maximum, replace the shift fork or hub sleeve.

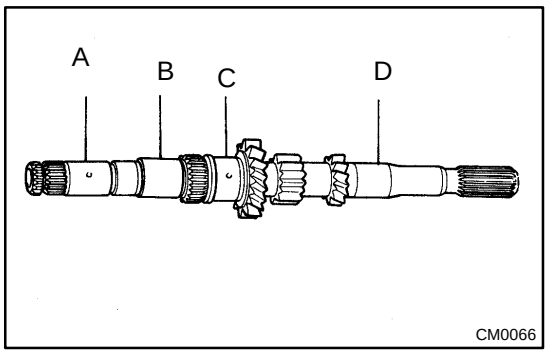

3. INSPECT INPUT SHAFT

(a) Check the input shaft for wear or damage.

(b) Using a micrometer, measure the outer diameter of the input shaft journal surface.

Minimum outer diameter:
Part A: 24.885 mm (0.9797 in.)
Part B: 28.985 mm (1.1411 in.)
Part C: 30.985 mm (1.2199 in.)
Part D: 24.967 mm (0.9830 in.)

If the outer diameter is less than the minimum, replace the input shaft.

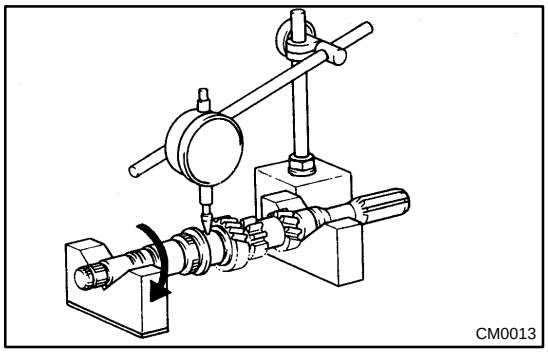

(c) Using a dial indicator, check the shaft runout.

Maximum runout: 0.03 mm (0.0012 in.)

If the runout exceeds the maximum, replace the input shaft.

MX072-03

REASSEMBLY

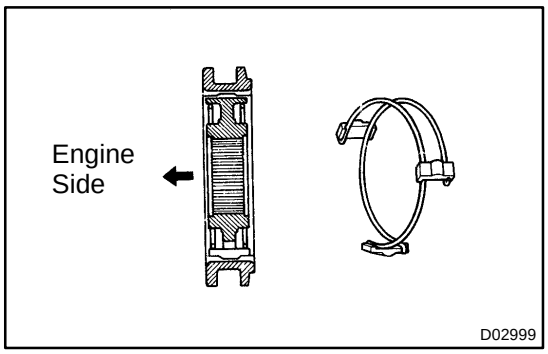

HINT:

Coat all of the sliding and rotating surfaces with gear oil before reassembly.

1. ASSEMBLE NO. 2 HUB SLEEVE ASSEMBLY

(a) Install the 3 shifting keys and No. 2 hub sleeve to the No. 2 clutch hub.

(b) Install the 2 shifting key springs under the shifting keys.

NOTICE:

Position the shifting key springs so that their end gaps are not in line.

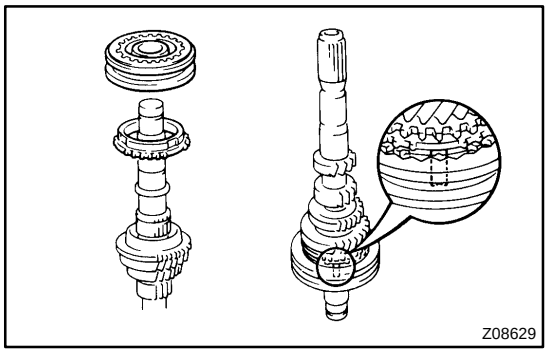

2. INSTALL NEEDLE ROLLER BEARING, 3RD GEAR, SYNCHRONIZER RING AND NO. 2 HUB SLEEVE ASSEMBLY TO INPUT SHAFT

(a) Apply gear oil to the needle roller bearings and install it.

(b) Install the 3rd gear and synchronizer ring.

(c) Install the No. 2 hub sleeve assembly so that the synchronizer ring slots and shifting keys are aligned.

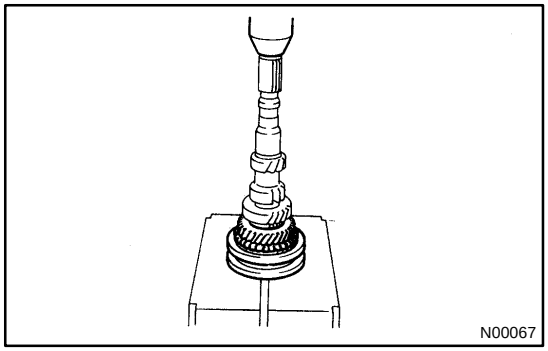

(d) Using a press, install the No. 2 hub sleeve assembly.

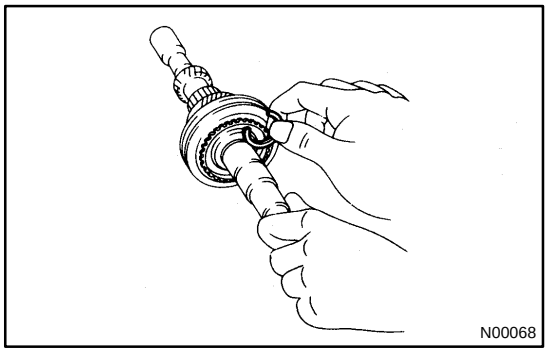

3. INSTALL SNAP RING

(a) Select a snap ring that allows the minimum axial play.

Mark	Thickness mm (in.)	Mark	Thickness mm (in.)
0	2.30 (0.0906)	3	2.48 (0.0976)
1	2.36 (0.0929)	4	2.54 (0.1000)
2	2.42 (0.0953)	5	2.60 (0.1024)

(b) Using a screwdriver and hammer, tap in the snap ring.

4. INSPECT 3RD GEAR THRUST CLEARANCE

(See page MX-24)

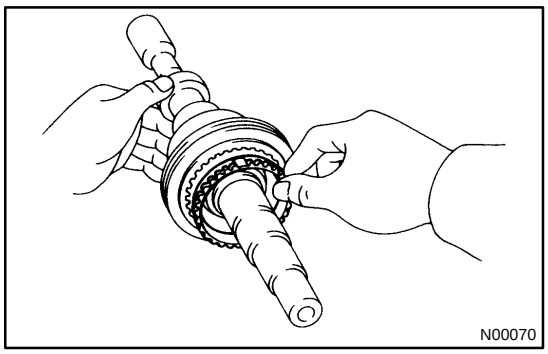

5. INSTALL SPACER, NEEDLE ROLLER BEARING, SYNCHRONIZER RING, 4TH GEAR AND REAR BALL BEARING

(a) Install the spacer.

(b) Apply gear oil to the needle roller bearings and install it.

(c) Place the synchronizer ring on the No. 2 hub sleeve assembly and align the synchronizer ring slots with the shifting keys.

(d) Install the 4th gear.

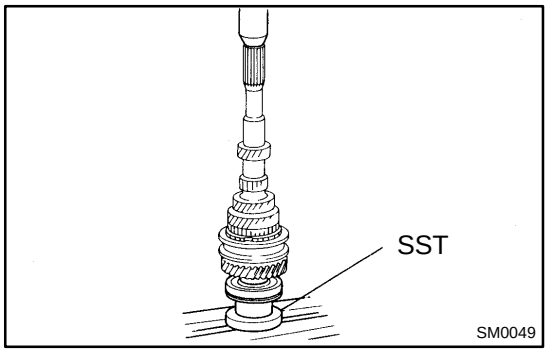

(e) Using SST and a press, install the rear ball bearing.
SST 09608-00071

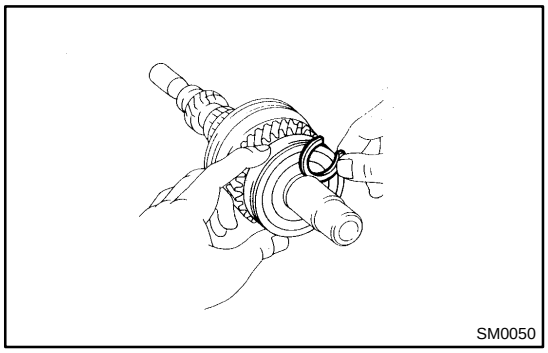

6. INSTALL SNAP RING

(a) Select a snap ring that allows the minimum axial play.

Mark	Thickness mm (in.)	Mark	Thickness mm (in.)
A	2.29 (0.0902)	D	2.47 (0.0972)
B	2.35 (0.0925)	E	2.53 (0.0996)
C	2.41 (0.0949)	F	2.59 (0.1020)

(b) Using a screwdriver and hammer, tap in the snap ring.

7. INSPECT 4TH GEAR THRUST CLEARANCE
(See page MX-24)

MANUAL TRANSAXLE ASSEMBLY

MX06V-04

COMPONENTS

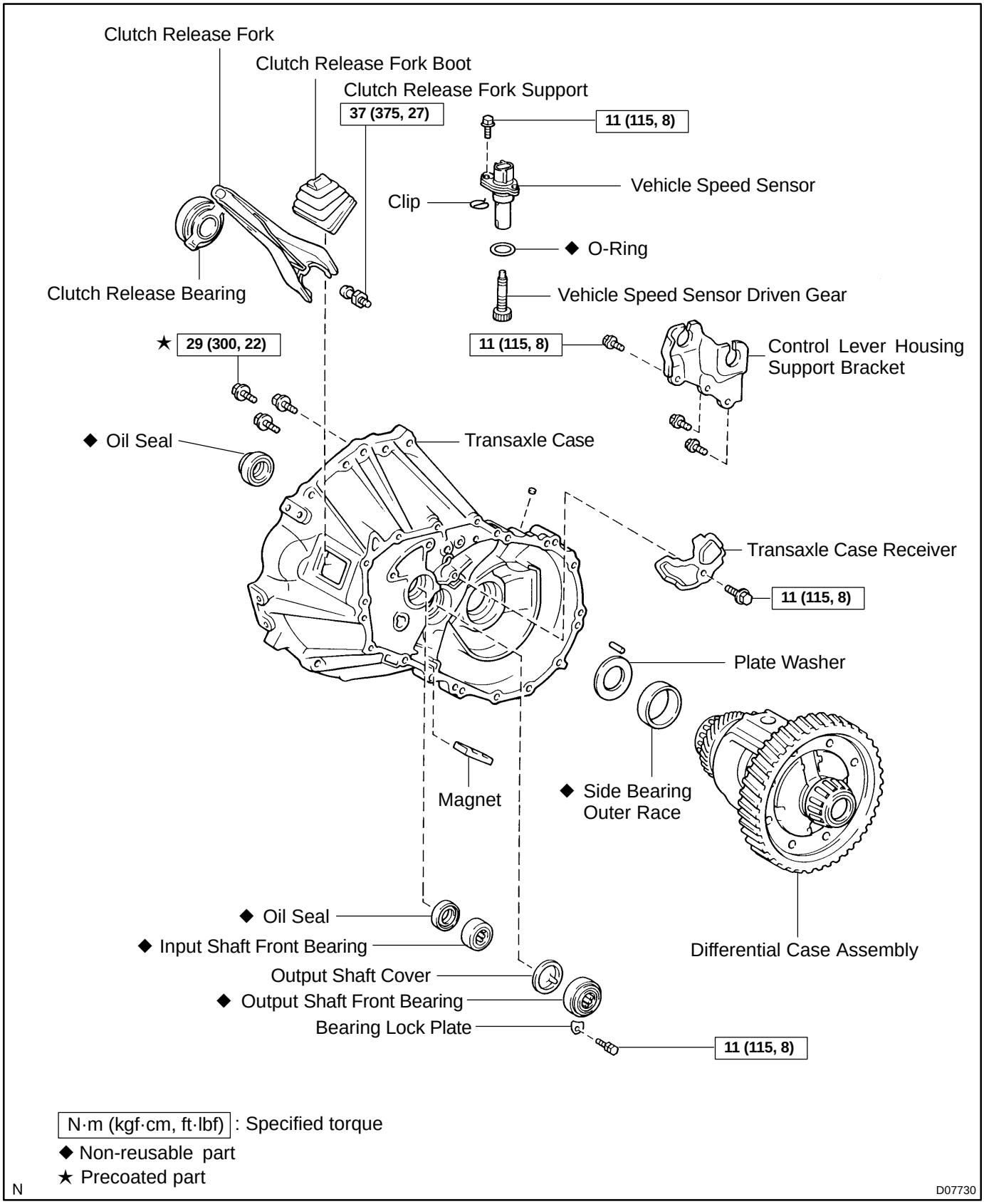

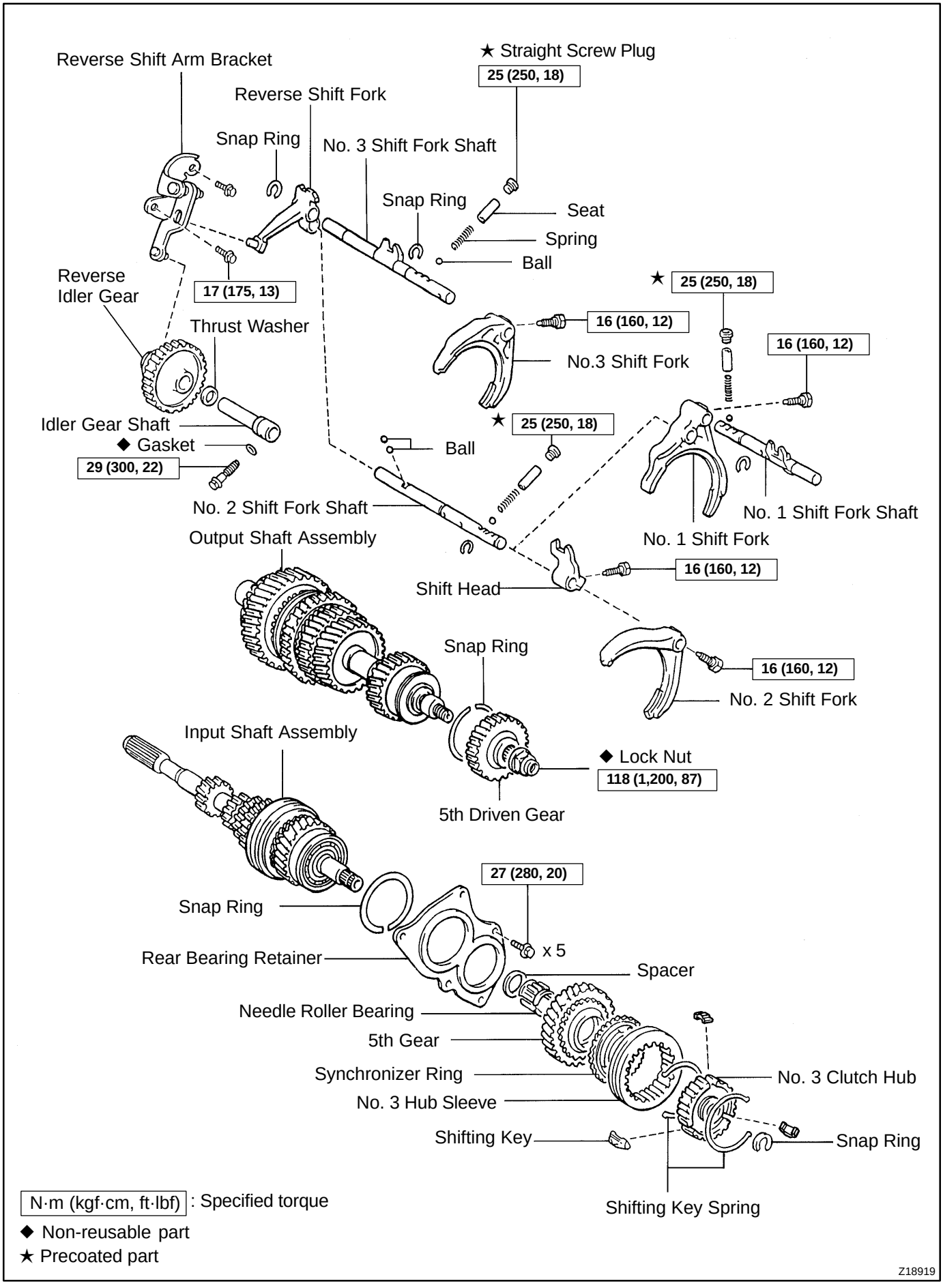
Reverse Shift Arm Bracket
★ Straight Screw Plug
25 (250, 18)
Reverse Shift Fork
Snap Ring
No. 3 Shift Fork Shaft
Snap Ring
Seat
Spring
Ball
Reverse Idler Gear
17 (175, 13)
★ 25 (250, 18)
16 (160, 12)
Thrust Washer
No.3 Shift Fork
16 (160, 12)
Idler Gear Shaft
★ 25 (250, 18)
◆ Gasket
Ball
29 (300, 22)
No. 2 Shift Fork Shaft
No. 1 Shift Fork Shaft
Output Shaft Assembly
No. 1 Shift Fork
16 (160, 12)
Shift Head
Snap Ring
16 (160, 12)
No. 2 Shift Fork
Input Shaft Assembly
◆ Lock Nut
118 (1,200, 87)
5th Driven Gear
27 (280, 20)
Snap Ring
x 5
Rear Bearing Retainer
Spacer
Needle Roller Bearing
5th Gear
Synchronizer Ring
No. 3 Clutch Hub
No. 3 Hub Sleeve
Shifting Key
Snap Ring
Shifting Key Spring
N·m (kgf·cm, ft·lbf) : Specified torque
◆ Non-reusable part
★ Precoated part
Z18919

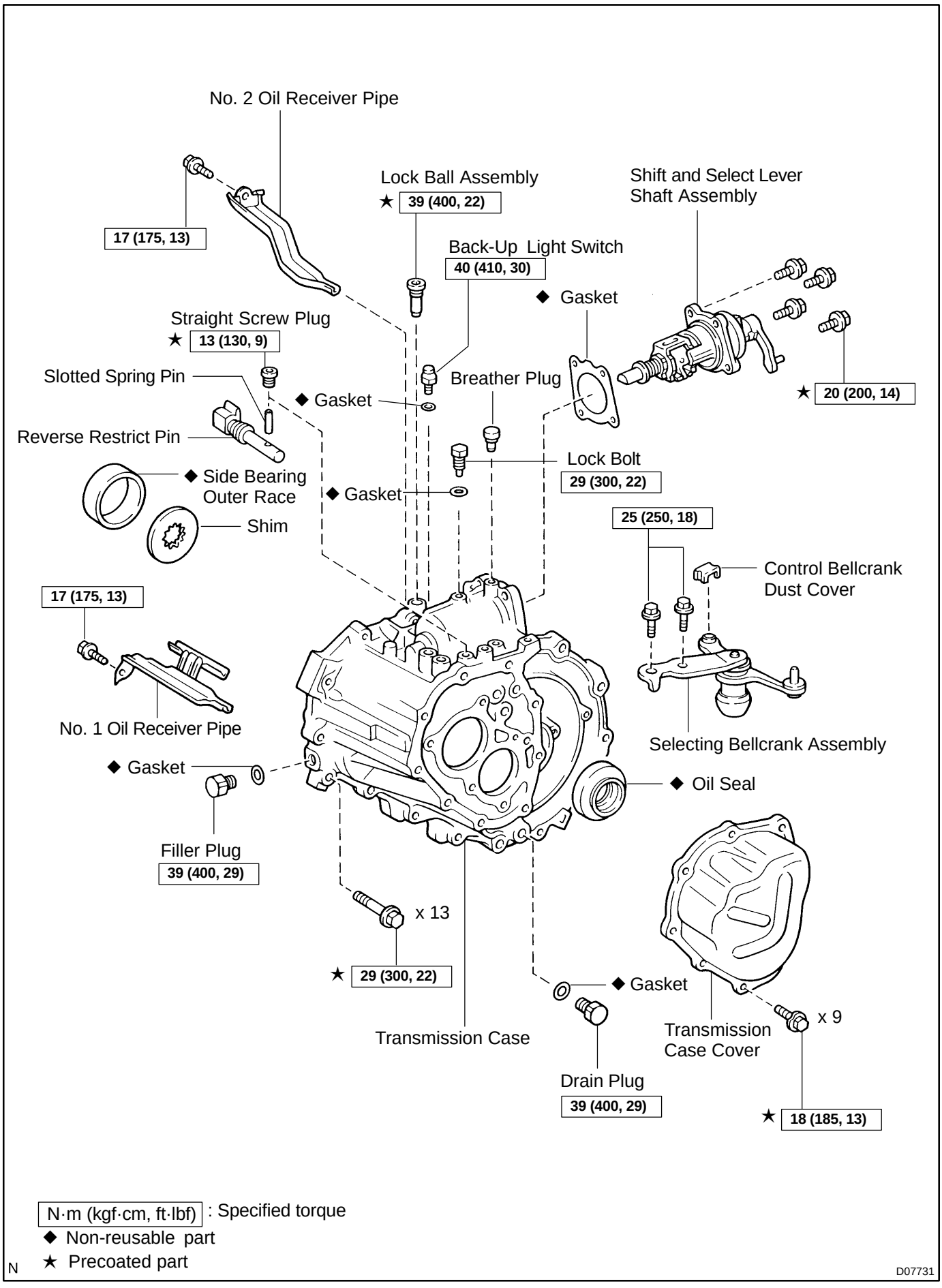
No. 2 Oil Receiver Pipe
17 (175, 13)
Lock Ball Assembly
★ 39 (400, 22)
Back-Up Light Switch
40 (410, 30)
Shift and Select Lever Shaft Assembly
◆ Gasket
★ 20 (200, 14)
Straight Screw Plug
★ 13 (130, 9)
Slotted Spring Pin
◆ Gasket
Breather Plug
Reverse Restrict Pin
Lock Bolt
29 (300, 22)
◆ Side Bearing Outer Race
◆ Gasket
Shim
25 (250, 18)
Control Bellcrank Dust Cover
17 (175, 13)
No. 1 Oil Receiver Pipe
Selecting Bellcrank Assembly
◆ Gasket
◆ Oil Seal
Filler Plug
39 (400, 29)
x 13
★ 29 (300, 22)
◆ Gasket
Transmission Case
Transmission Case Cover
x 9
Drain Plug
39 (400, 29)
★ 18 (185, 13)
N·m (kgf·cm, ft·lbf) : Specified torque
◆ Non-reusable part
★ Precoated part
N
D07731

MX0AA-02

DISASSEMBLY

1. REMOVE CLUTCH RELEASE FORK AND BEARING

HINT:

At the time of reassembly, please refer to the following item.

Apply molybdenum disulphide lithium base grease (See page CL-17).

2. REMOVE FILLER PLUG AND DRAIN PLUG WITH 2 GASKETS

Torque: 39 N·m (400 kgf·cm, 29 ft·lbf)

3. REMOVE VEHICLE SPEED SENSOR

(a) Remove the bolt and vehicle speed sensor.

Torque: 11 N·m (115 kgf·cm, 8 ft·lbf)

(b) Using a small screwdriver, remove the clip from the vehicle speed sensor.

(c) Remove the vehicle speed sensor driven gear from the vehicle speed sensor.

(d) Using a small screwdriver, remove the O-ring from the vehicle speed sensor.

4. REMOVE BACK-UP LIGHT SWITCH WITH GASKET

Torque: 40 N·m (410 kgf·cm, 30 ft·lbf)

5. REMOVE CONTROL LEVER HOUSING SUPPORT BRACKET

Remove the 3 bolts and control lever housing support bracket.

Torque: 11 N·m (115 kgf·cm, 8 ft·lbf)

6. REMOVE SELECTING BELLCRANK ASSEMBLY

(a) Remove the 2 bolts and selecting bellcrank assembly.

Torque: 25 N·m (250 kgf·cm, 18 ft·lbf)

(b) Remove the control bellcrank dust cover from the selecting bellcrank assembly.

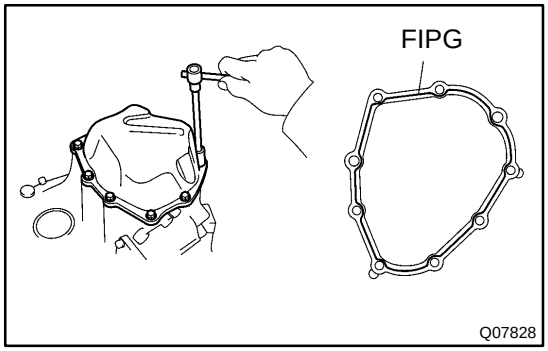

7. REMOVE TRANSMISSION CASE COVER

(a) Remove the 9 bolts.

Sealant:

Part No. 08833-00080, THREE BOND 1344, LOCTITE 242 or equivalent

Torque: 18 N·m (185 kgf·cm, 13 ft·lbf)

(b) Carefully tap the projection of the transmission case cover with a brass bar and hammer and remove it.

HINT:

At the time of reassembly, please refer to the following item.

Apply FIPG to the transmission case cover, as shown in the illustration.

FIPG:

Part No. 08826-00090, THREE BOND 1281 or equivalent

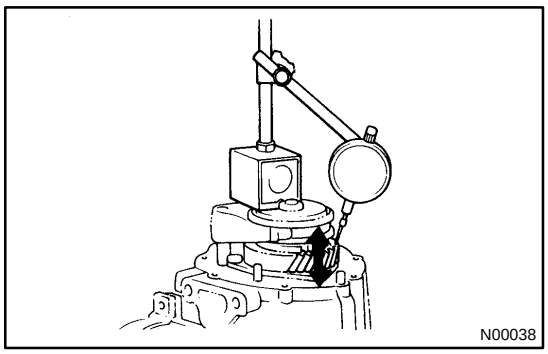
N00038

8. INSPECT 5TH GEAR THRUST CLEARANCE

Using a dial indicator, measure the thrust clearance.

Standard clearance:
0.10 - 0.57 mm (0.0039 - 0.0224 in.)
Maximum clearance:
0.57 mm (0.0224 in.)

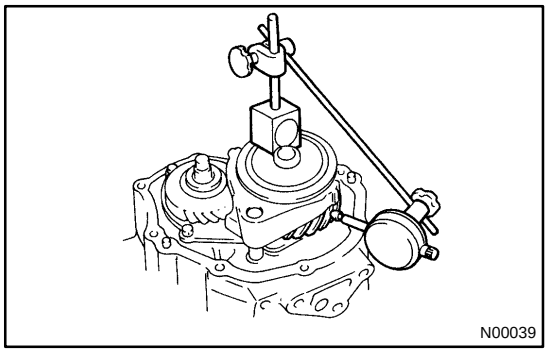
N00039

9. INSPECT 5TH GEAR RADIAL CLEARANCE

Using a dial indicator, measure the radial clearance.

Standard clearance:
KOYO made:
0.015 - 0.058 mm (0.0006 - 0.0023 in.)
NSK made:
0.015 - 0.056 mm (0.0006 - 0.0022 in.)
Maximum clearance:
KOYO made: 0.058 mm (0.0023 in.)
NSK made: 0.056 mm (0.0022 in.)

If the clearance exceeds the maximum, replace the gear, needle roller bearing or shaft.

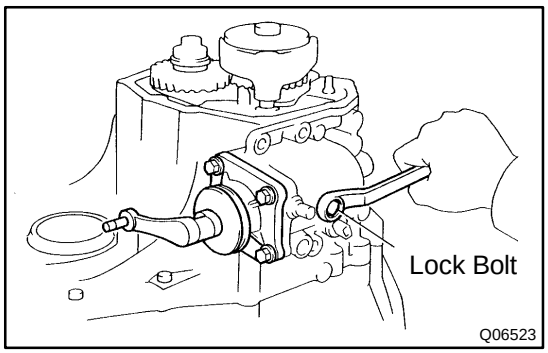

Q06523

10. REMOVE SHIFT AND SELECT LEVER SHAFT ASSEMBLY

(a) Remove the lock bolt and gasket.
Torque: 29 N·m (300 kgf·cm, 22 ft·lbf)

(b) Remove the 4 bolts and pull out the shift and select lever shaft assembly with the gasket.
Sealant:
Part No. 08833-00080, THREE BOND 1344, LOCTITE 242 or equivalent
Torque: 20 N·m (200 kgf·cm, 14 ft·lbf)

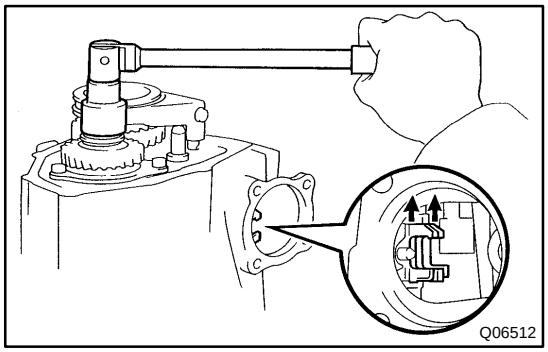
Q06512

11. REMOVE LOCK NUT

(a) Engage the gear to the double meshing.

(b) Using a chisel and hammer, loosen the staked part of the nut.

(c) Remove the lock nut.
Torque: 118 N·m (1,200 kgf·cm, 87 ft·lbf)

(d) Disengage the double meshing of the gear.

12. REMOVE NO. 3 HUB SLEEVE AND NO. 3 SHIFT FORK

(a) Remove the bolt from the No. 3 shift fork.
Torque: 16 N·m (160 kgf·cm, 12 ft·lbf)

(b) Remove the No. 3 hub sleeve and No. 3 shift fork.

13. REMOVE NO. 3 CLUTCH HUB AND 5TH GEAR

(a) Using 2 screwdrivers and a hammer, tap out the snap ring.

HINT:
At the time of reassembly, please refer to the following item.
Select a snap ring that allows the minimum axial play.

Mark	Thickness mm (in.)	Mark	Thickness mm (in.)
A	2.25 (0.0886)	E	2.49 (0.0980)
B	2.31 (0.0909)	F	2.55 (0.1004)
C	2.37 (0.0933)	G	2.61 (0.1028)
D	2.43 (0.0957)	-	-

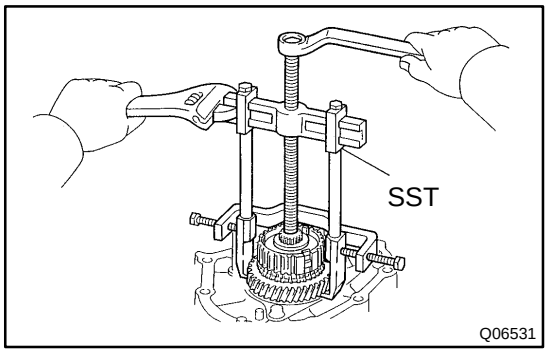

(b) Using SST, remove the No. 3 clutch hub assembly, 5th gear and synchronizer ring.
SST 09950-4001 1

HINT:
At the time of reassembly, please refer to the following items.

- Install the No. 3 clutch hub assembly to the No. 3 hub sleeve.

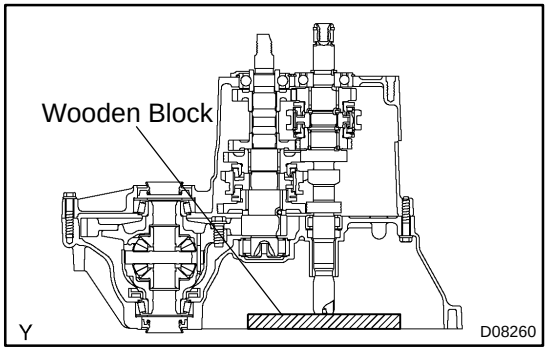

- Before driving in the No. 3 clutch hub assembly, place the suitable sized wooden block on the rear side of the input shaft, as shown in the illustration. When driving it in, fix the input shaft firmly so that it is not pushed downward. Otherwise the input shaft rear bearing is overloaded, it might be damaged.

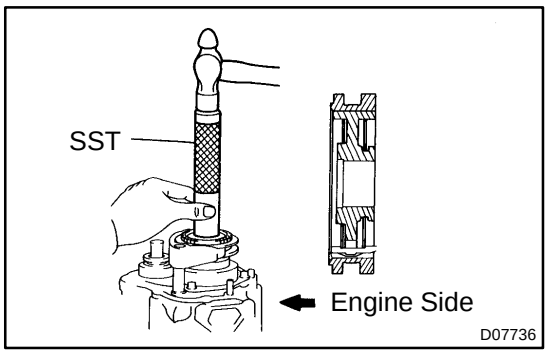

- Using SST and a hammer, drive in the No. 3 hub sleeve assembly with the No. 3 shift fork.
  SST 09612-2201 1

NOTICE:

Align the synchronizer ring slots with the shifting keys.

(c) Remove the needle roller bearings and spacer.

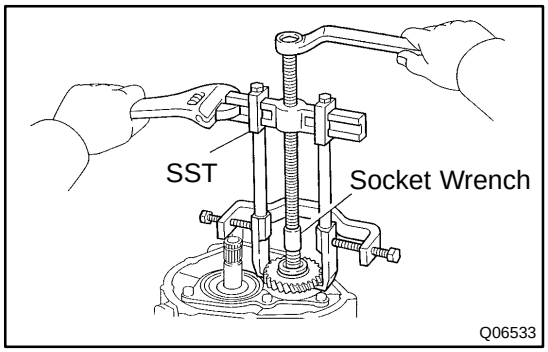

14. REMOVE 5TH DRIVEN GEAR

Using SST and a socket wrench, remove the 5th driven gear.
SST 09950-4001 1

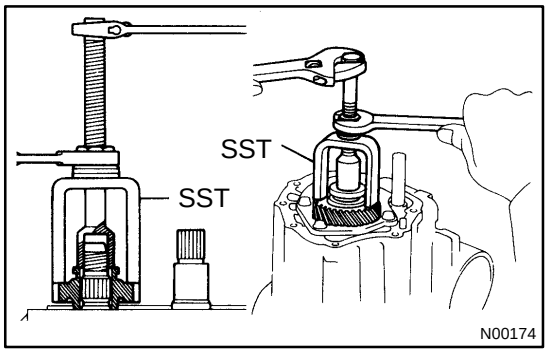

HINT:

At the time of reassembly, please refer to the following item.

Using SST, install the 5th driven gear.
SST 09309-12020

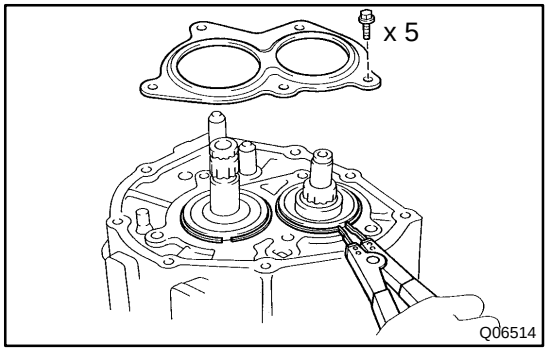

15. REMOVE REAR BEARING RETAINER

Remove the 5 bolts and rear bearing retainer.
Torque: 27 N·m (280 kgf·cm, 20 ft·lbf)

16. REMOVE BEARING SNAP RING

Using a snap ring expander, remove the 2 snap rings.

HINT:

If it is difficult to remove and install the snap rings, pull up the shafts.

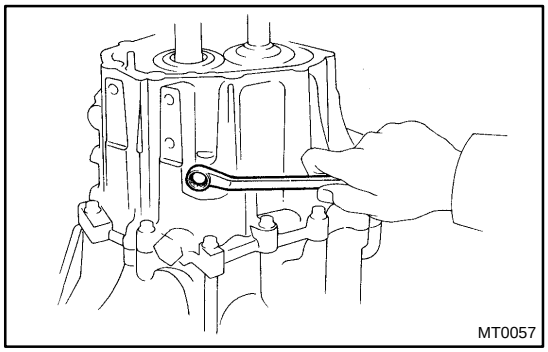

17. REMOVE REVERSE IDLER GEAR SHAFT LOCK BOLT AND GASKET
Torque: 29 N·m (300 kgf·cm, 22 ft·lbf)

18. REMOVE SNAP RING FROM NO. 2 SHIFT FORK SHAFT

Using 2 screwdrivers and a hammer, tap out the snap ring.

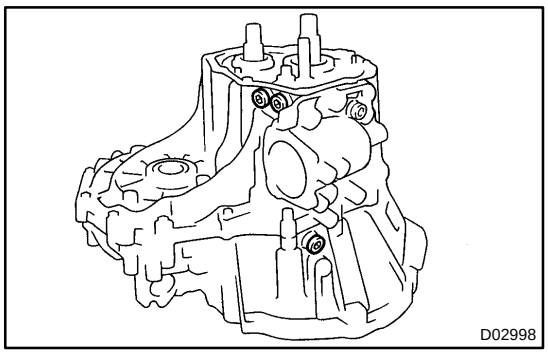
D02998

19. REMOVE STRAIGHT SCREW PLUG, SEAT, SPRING AND BALL

(a) Using a hexagon wrench, remove the 3 straight screw plugs.

Sealant:
Part No. 08833-00080, THREE BOND 1344, LOCTITE 242 or equivalent
Torque: 25 N·m (250 kgf·cm, 18 ft·lbf)

(b) Using a magnetic finger, remove the 3 seats, springs and balls.

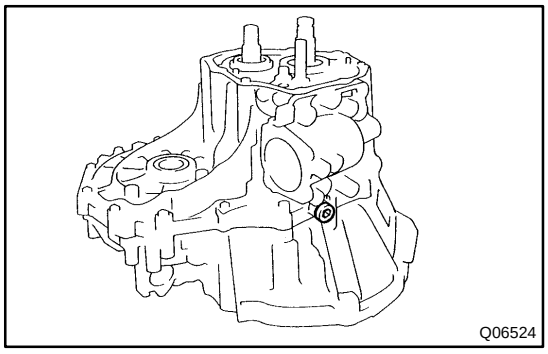
Q06524

20. REMOVE LOCK BALL ASSEMBLY

Using a hexagon wrench, remove the lock ball assembly.

Sealant:
Part No. 08833-00080, THREE BOND 1344, LOCTITE 242 or equivalent
Torque: 39 N·m (400 kgf·cm, 29 ft·lbf)

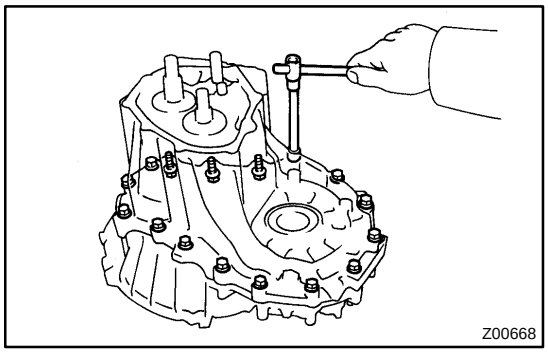
Z00668

21. REMOVE TRANSMISSION CASE

(a) Remove the 16 bolts.

Sealant:
Part No. 08833-00080, THREE BOND 1344, LOCTITE 242 or equivalent
Torque: 29 N·m (300 kgf·cm, 22 ft·lbf)

(b) Carefully tap the transmission case with a plastic hammer and remove it.

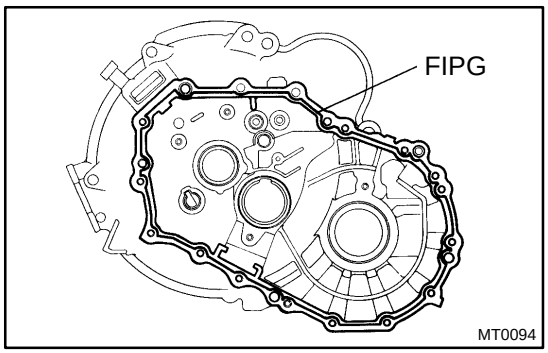

MT0094

HINT:
At the time of reassembly, please refer to the following item.
Apply FIPG to the transaxle case, as shown in the illustration.

FIPG:
Part No. 08826-00090, THREE BOND 1281 or equivalent

(c) Remove the 2 bolts, No. 1 and No. 2 oil receiver pipes from the transmission case.

Torque: 17 N·m (175 kgf·cm, 13 ft·lbf)

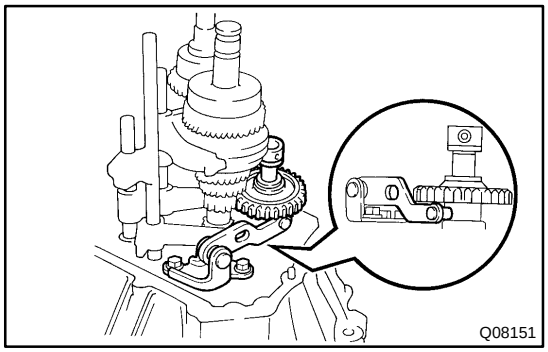
Q08151

22. REMOVE REVERSE IDLER GEAR, THRUST WASHER AND SHAFT

23. REMOVE REVERSE SHIFT ARM BRACKET

Remove the 2 bolts and reverse shift arm bracket.

Torque: 17 N·m (175 kgf·cm, 13 ft·lbf)

NOTICE:
At the time of reassembly, please refer to the following items.

- **Set the pin on the top of the reverse shift arm into a groove on the reverse idler gear.**

- **Fit the claw of the reverse shift arm bracket with the notch of the input shaft front bearing.**

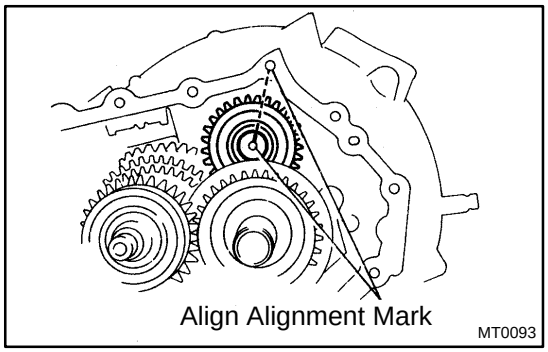

- **Install the reverse idler gear, thrust washer and shaft, as shown.**

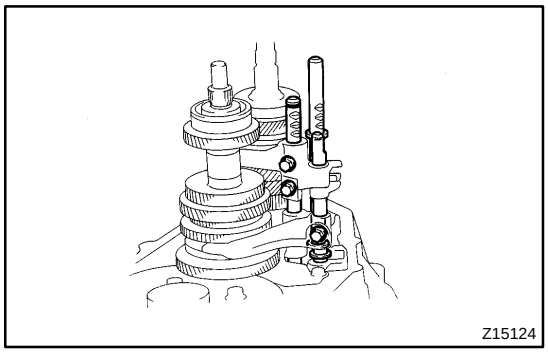

24. REMOVE SHIFT FORK AND SHIFT FORK SHAFT

(a) Using 2 screwdrivers and a hammer, tap out the 3 snap rings.

(b) Remove the 3 set bolts.
Torque: 16 N·m (160 kgf·cm, 12 ft·lbf)

(c) Remove the No. 2 shift fork shaft and shift head.

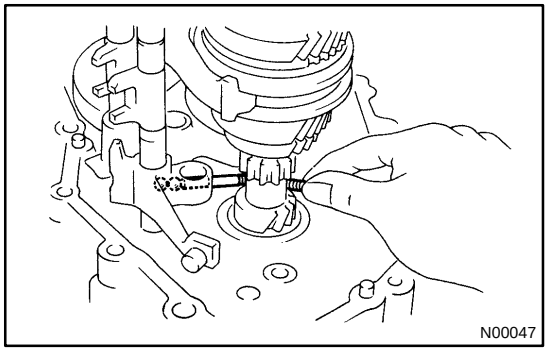

(d) Using a magnetic finger, remove the 2 balls from the reverse shift fork.

(e) Remove the No. 3 shift fork shaft and reverse shift fork.

(f) Pull out the No. 1 shift fork shaft.

(g) Remove the No. 1 and No. 2 shift forks.

25. REMOVE INPUT AND OUTPUT SHAFTS TOGETHER FROM TRANSAXLE CASE

26. REMOVE DIFFERENTIAL CASE ASSEMBLY

NOTICE:

At the time of reassembly, please refer to the following item.

Before reassembly, inspect the differential side bearing preload (See page MX-41).

27. REMOVE MAGNET FROM TRANSAXLE CASE

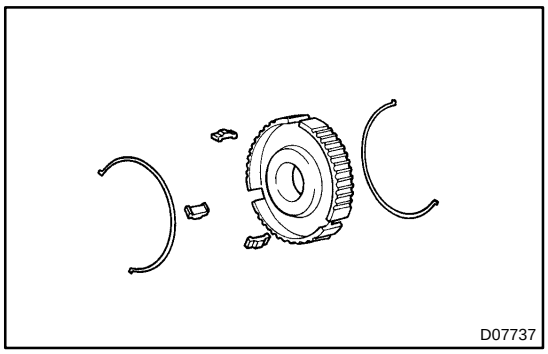

28. DISASSEMBLE NO. 3 CLUTCH HUB ASSEMBLY

(a) Using a screwdriver, remove the 2 shifting key springs from the No. 3 clutch hub.

NOTICE:

At the time of reassembly, please refer to the following item.

Position the shifting key springs so that their end gaps are not aligned.

(b) Remove the 3 shifting keys from the No. 3 clutch hub.

MX0AB-01

INSPECTION

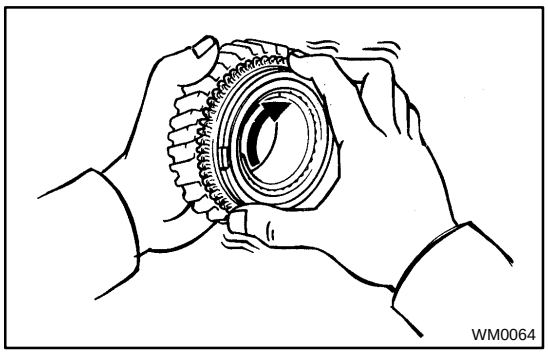
WM0064

1. INSPECT 5TH GEAR SYNCHRONIZER RING

(a) Check for wear or damage.

(b) Check the braking effect of the synchronizer ring. Turn the synchronizer ring in one direction while pushing it to the gear cone. Check that the ring locks.

If the braking effect is insufficient, apply a small amount of the fine lapping compound between the synchronizer ring and gear cone. Lightly rub the synchronizer ring and gear cone together.

NOTICE:

Ensure the fine lapping compound is completely washed off after rubbing.

(c) Check again the braking effect of the synchronizer ring.

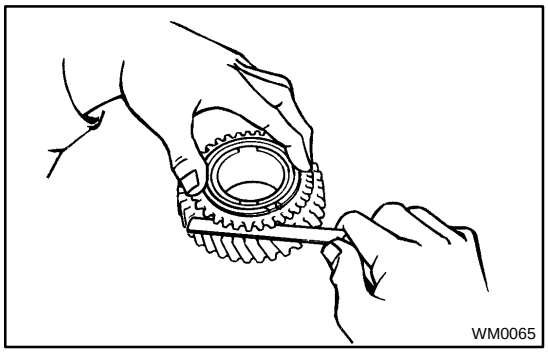
WM0065

(d) Using a feeler gauge, measure the clearance between the synchronizer ring back and gear spline end.

Minimum clearance: 0.75 mm (0.0295 in.)

If the clearance is less than the minimum, replace the synchronizer ring and gear cone by applying a small amount of the fine lapping compound.

NOTICE:

Ensure the fine lapping compound is completely washed off after rubbing.

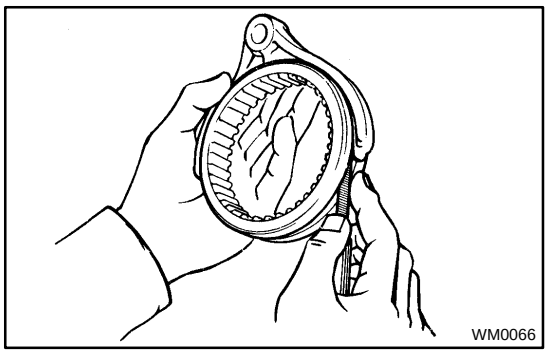
WM0066

2. INSPECT SHIFT FORK AND HUB SLEEVE CLEARANCE

Using a feeler gauge, measure the clearance between the hub sleeve and shift fork.

Maximum clearance: 0.5 mm (0.020 in.)

If the clearance exceeds the maximum, replace the shift fork or hub sleeve.

3. REMOVE TRANSAXLE CASE RECEIVER

Remove the bolt and transaxle case receiver.

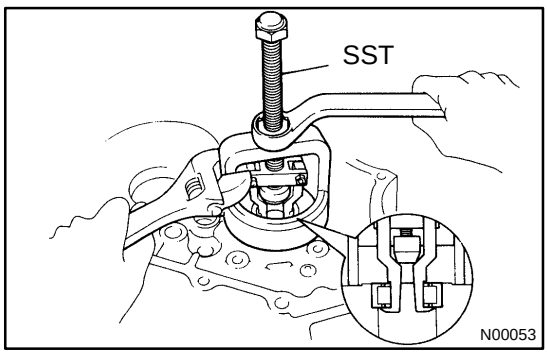

N00053

4. IF NECESSARY, REPLACE INPUT SHAFT FRONT BEARING AND OIL SEAL

(a) Using SST, remove the input shaft front bearing.

SST 09612-65014

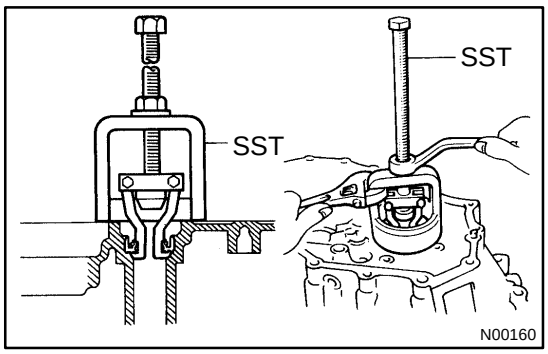

(b) Using SST, remove the oil seal.
SST 09612-65014

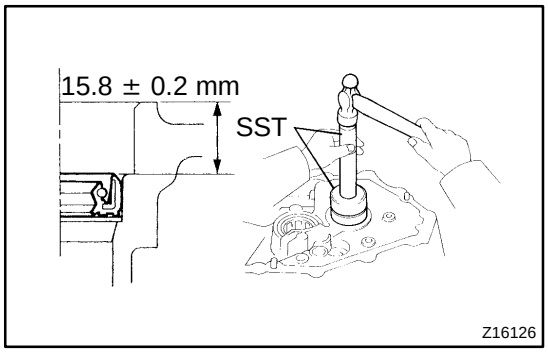

(c) Using SST and a hammer, install a new oil seal.
SST 09950- 60010 (09951- 00360), 09950- 70010 (09951-07150)
Drive in depth: 15.8 ± 0.2 mm (0.622 ± 0.008 in.)

(d) Coat the lip of the oil seal with MP grease.

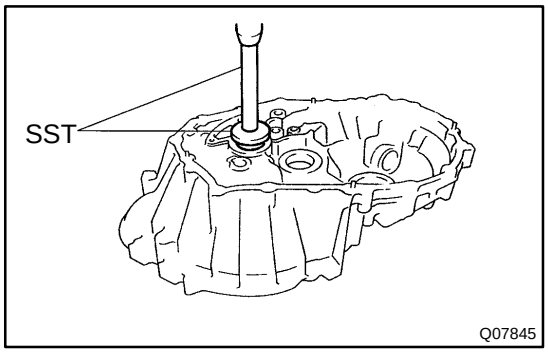

(e) Using SST and a press, install a new input shaft front bearing.
SST 09950- 60010 (09951- 00460), 09950- 70010 (09951-07150)

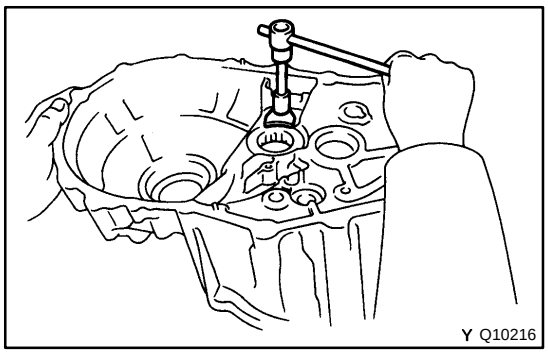

5. IF NECESSARY, REPLACE OUTPUT SHAFT FRONT BEARING AND OUTPUT SHAFT COVER

(a) Remove the bolt and bearing lock plate.

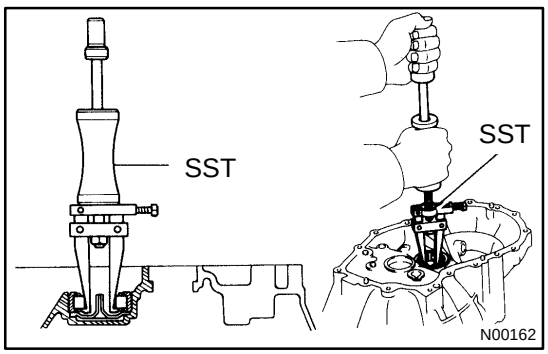

(b) Using SST, pull out the output shaft front bearing.
SST 09308-00010

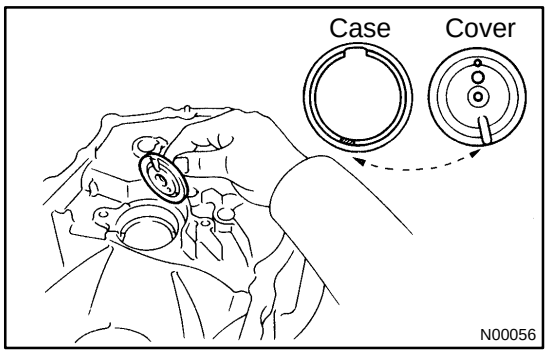

(c) Remove the output shaft cover.
(d) Install the output shaft cover.

NOTICE:

Install the output shaft cover projection into the case side hollow.

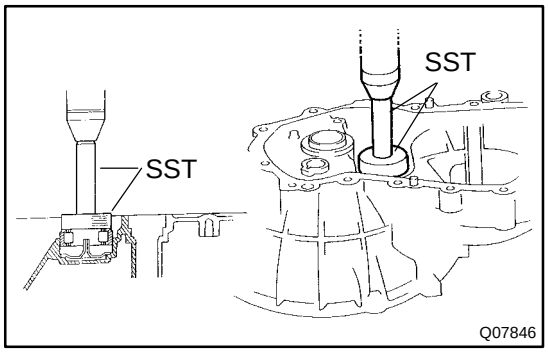

(e) Using SST and a press, install a new output shaft front bearing.
SST 09950- 60010 (09951- 00620), 09950- 70010 (09951-07150)
(f) Install the bearing lock plate with the bolt.
Torque: 11 N·m (115 kgf·cm, 8 ft·lbf)

6. INSTALL TRANSAXLE CASE RECEIVER

Install the transaxle case receiver with the bolt.
Torque: 11 N·m (115 kgf·cm, 8 ft·lbf)

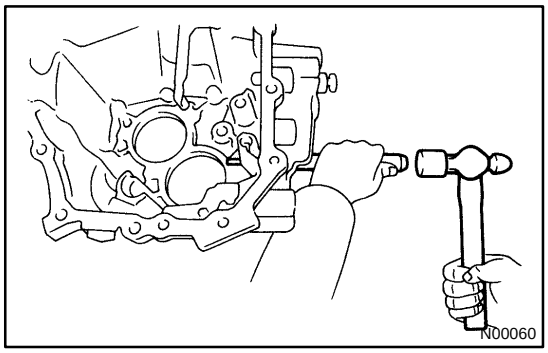

7. IF NECESSARY, REPLACE REVERSE RESTRICT PIN

(a) Using a hexagon wrench, remove the straight screw plug.
(b) Using a pin punch and hammer, drive out the slotted spring pin.

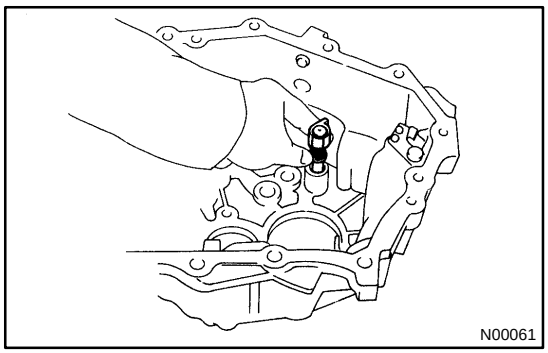

(c) Replace the reverse restrict pin.
(d) Using a pin punch and hammer, drive in the slotted spring pin.
(e) Apply sealant to the plug threads.
Sealant:
Part No. 08833-00080, THREE BOND 1344, LOCTITE 242 or equivalent
(f) Using a hexagon wrench, install the straight screw plug.
Torque: 13 N·m (130 kgf·cm, 9 ft·lbf)

MX06Y-02

REASSEMBLY

Reassembly is in the reverse order of disassembly (See page MX-12).

NOTICE:

When working with FIPG material, you must observe the following items.

- **Using a razor blade and gasket scraper, remove all the old FIPG material from the gasket surfaces.**
- **Thoroughly clean all components to remove all the loose material.**
- **Clean both sealing surfaces with a non-residue solvent.**
- **Apply FIPG in an approx. 1 mm (0.04 in.) wide bead along the sealing surface.**
- **Part must be assembled within 10 minutes of application. Otherwise, the FIPG material must be removed and reapplied.**

HINT:

Coat all of the sliding and rotating surfaces with gear oil before reassembly.

MANUAL TRANSAXLE UNIT

COMPONENTS

MX0A8-02

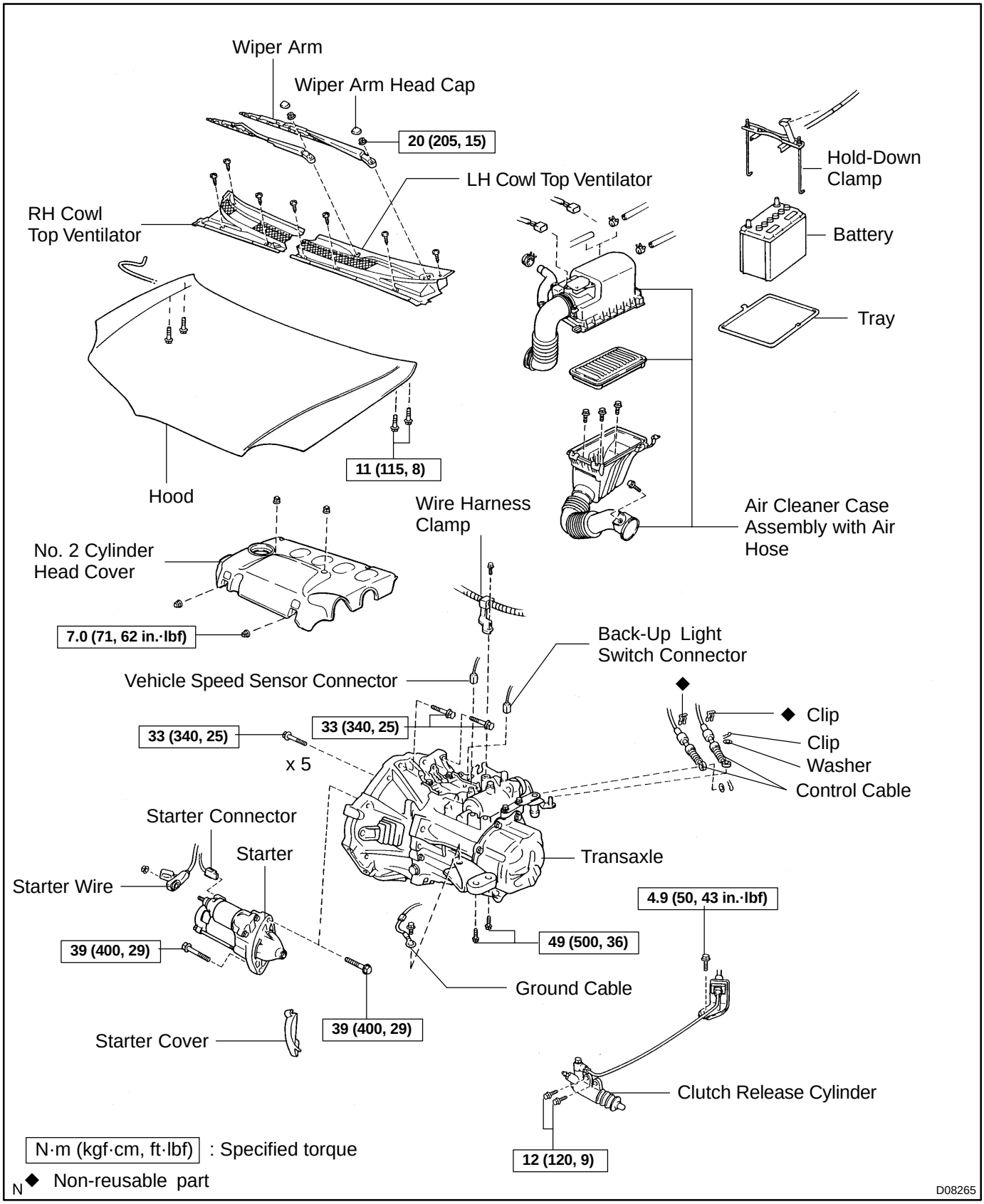

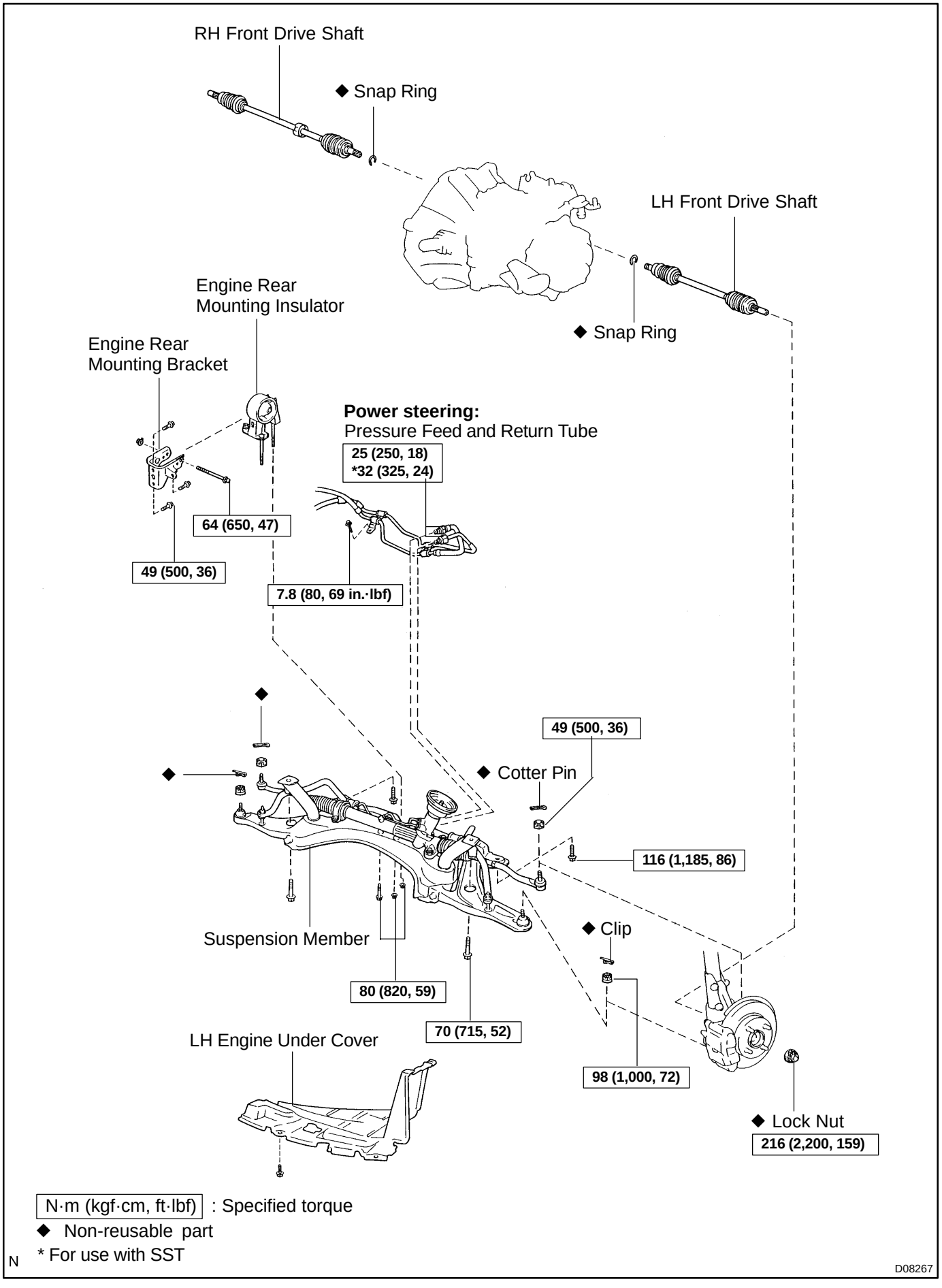
RH Front Drive Shaft
◆ Snap Ring
LH Front Drive Shaft
◆ Snap Ring
Engine Rear
Mounting Insulator
Engine Rear
Mounting Bracket
Power steering:
Pressure Feed and Return Tube
25 (250, 18)
*32 (325, 24)
64 (650, 47)
49 (500, 36)
7.8 (80, 69 in.·lbf)
◆
◆
◆ Cotter Pin
49 (500, 36)
116 (1,185, 86)
Suspension Member
◆ Clip
80 (820, 59)
70 (715, 52)
LH Engine Under Cover
98 (1,000, 72)
◆ Lock Nut
216 (2,200, 159)
N·m (kgf·cm, ft·lbf) : Specified torque
◆ Non-reusable part
* For use with SST
N
D08267

MX06U-03

INSTALLATION

Installation is in the reverse order of removal (See page MX-4).

HINT:

After installation, check and inspect items as follows.

- Front wheel alignment (See page SA-5).
- Do the road test.

MX0A9-02

REMOVAL

1. REMOVE HOOD

HINT:

At the time of installation, please refer to the following item.

Adjust the hood (See page BO-6).

2. REMOVE WIPER ARM (See page BO-32)

HINT:

At the time of installation, please refer to the following item.

Adjust the installation position of the wiper arms (See page BO-34).

3. REMOVE RH AND LH COWL TOP VENTILATOR LOUVERS (See page BO-32)

4. REMOVE NO. 2 CYLINDER HEAD COVER

Remove the 4 nuts and No. 2 cylinder head cover.

Torque: 7.0 N·m (71 kgf·cm, 62 in.·lbf)

5. REMOVE BATTERY AND AIR CLEANER CASE ASSEMBLY WITH AIR HOSE

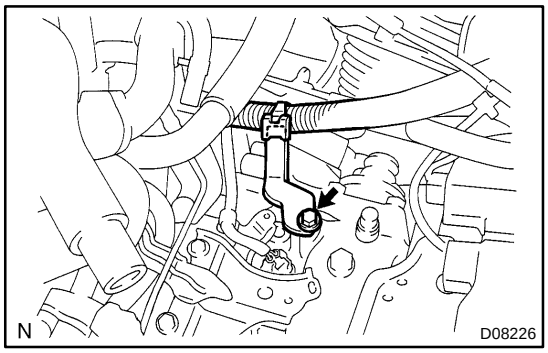

6. DISCONNECT WIRE HARNESS FROM TRANSAXLE

Remove the set bolt of the wire harness clamp.

7. DISCONNECT CONTROL CABLE

(a) Remove the 2 clips and washers.

(b) Remove the 2 clips and disconnect the control cables from the transaxle.

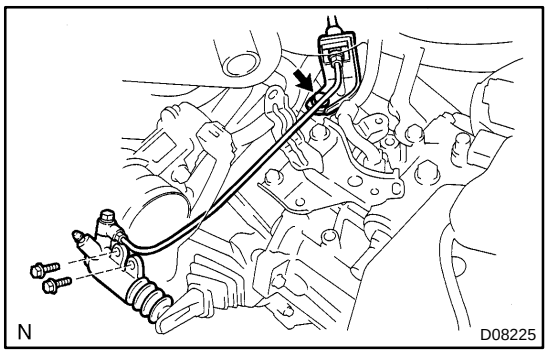

8. DISCONNECT CLUTCH RELEASE CYLINDER

(a) Remove the set bolt of the clutch line.

Torque: 4.9 N·m (50 kgf·cm, 43 in.·lbf)

(b) Remove the 2 set bolts of the clutch release cylinder.

Torque: 12 N·m (120 kgf·cm, 9 ft·lbf)

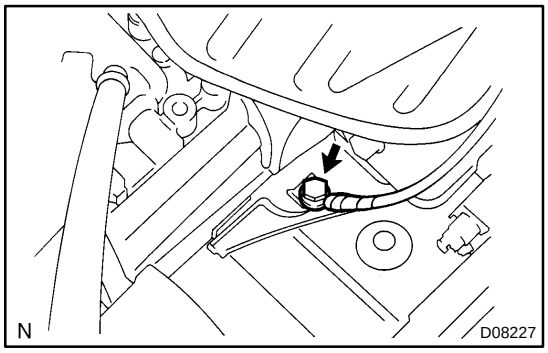

9. DISCONNECT GROUND CABLE

Remove the set bolt of the ground cable from the engine left mounting bracket.

10. DISCONNECT BACK-UP LIGHT SWITCH AND VEHICLE SPEED SENSOR CONNECTORS

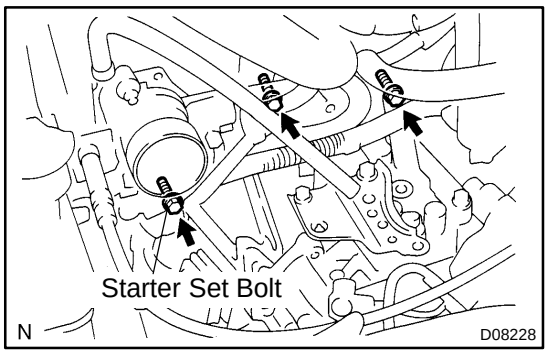

11. REMOVE 2 TRANSAXLE UPPER SIDE MOUNTING BOLTS
Torque: 33 N·m (340 kgf·cm, 25 ft·lbf)

12. REMOVE STARTER SET BOLT
Torque: 39 N·m (400 kgf·cm, 29 ft·lbf)

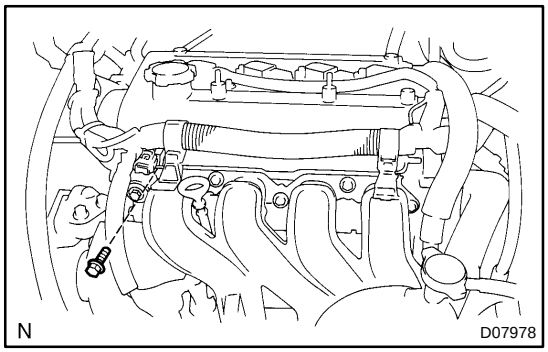

13. ATTACH ENGINE SLING DEVICE TO ENGINE HANGER

(a) Remove the bolt.

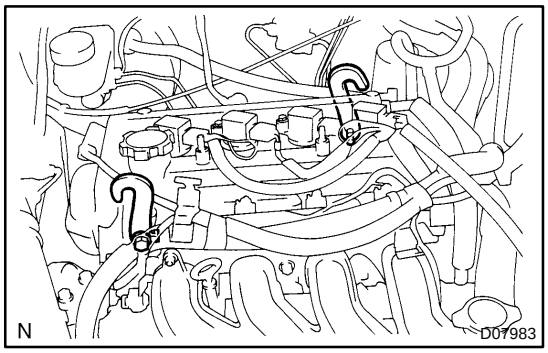

(b) Install the 2 No. 1 engine hangers with the bolts in the correct direction.
Parts No.:
No. 1 engine hanger: 12281-21010
Bolt: 91642-81025
Torque: 40 N·m (400 kgf·cm, 29 ft·lbf)

(c) Attach the engine chain hoist to the engine hangers.

CAUTION:
Do not attempt to hang the engine by hooking the chain to any other part.

14. RAISE VEHICLE

CAUTION:
Make sure that the vehicle is securely supported.

15. REMOVE LH ENGINE UNDER COVER

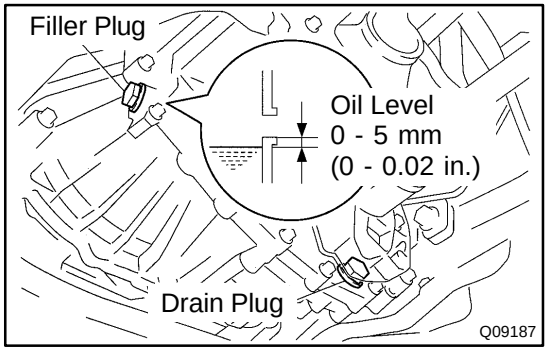

16. DRAIN TRANSAXLE OIL
Oil grade: API GL-4 or GL-5
Viscosity: SAE 75 W-90
Capacity: 1.9 liters (2.0 US qts, 1.7 Imp. qts)
Torque: 39 N·m (400 kgf·cm, 29 ft·lbf)

17. REMOVE RH AND LH FRONT DRIVE SHAFTS (See page SA-18)

18. REMOVE SUSPENSION MEMBER

(a) Remove the 2 set nuts and bolt of the engine rear mounting insulator from the suspension member (See page SA-37).

(b) Disconnect the sliding yoke (See page SR-13).

(c) Power steering:
Disconnect the pressure feed and return tubes (See page SR-48).

(d) Power steering:
Disconnect the tube clamp (See page SR-48).

(e) Remove the suspension member (See page SA-37).

19. JACK UP TRANSAXLE SLIGHTLY

Using a transmission jack, support the transaxle.

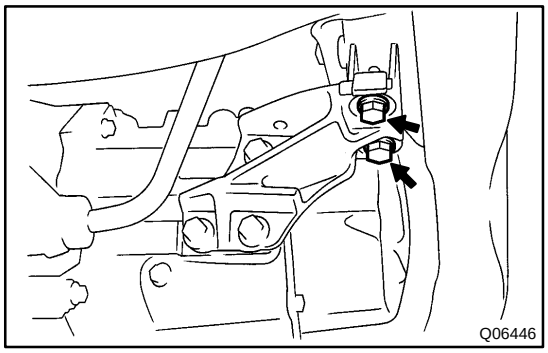

20. DISCONNECT ENGINE LEFT MOUNTING BRACKET FROM ENGINE LEFT MOUNTING INSULATOR

Remove the 2 bolts.

Torque: 49 N·m (500 kgf·cm, 36 ft·lbf)

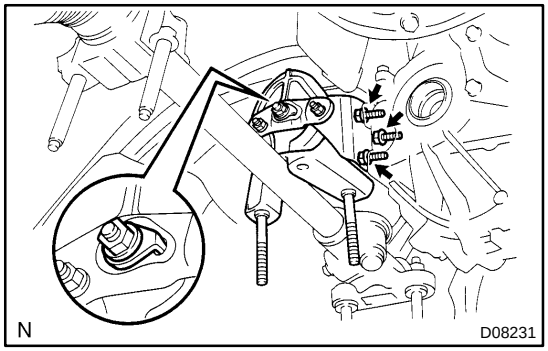

21. REMOVE ENGINE REAR MOUNTING INSULATOR AND BRACKET

(a) Remove the bolt, nut and engine rear mounting insulator.
Torque: 64 N·m (650 kgf·cm, 47 ft·lbf)

(b) Remove the 3 bolts and engine rear mounting bracket.
Torque: 49 N·m (500 kgf·cm, 36 ft·lbf)

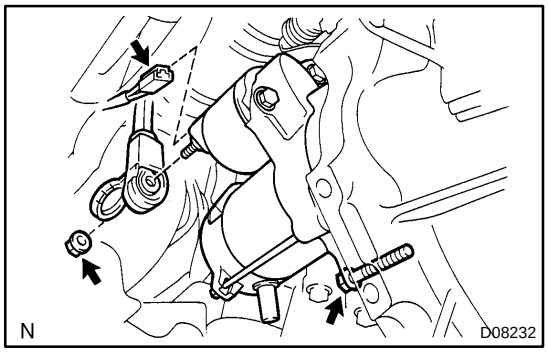

22. REMOVE STARTER

(a) Remove the bolt, starter cover and starter.
Torque: 39 N·m (400 kgf·cm, 29 ft·lbf)

(b) Disconnect the starter connector.

(c) Remove the nut and starter wire.

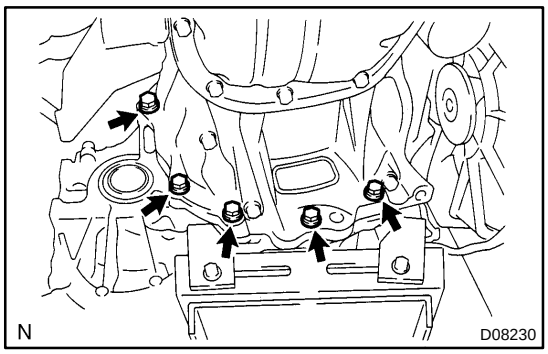

23. REMOVE 5 TRANSAXLE LOWER SIDE MOUNTING BOLTS

Torque: 33 N·m (340 kgf·cm, 25 ft·lbf)

24. REMOVE TRANSAXLE

Lower the engine left side and remove the transaxle from the engine.

HINT:

At the time of installation, please refer to the following items.

- Align the input shaft with the clutch disc and install the transaxle to the engine.
- Temporarily tighten the transaxle mounting bolts.

OUTPUT SHAFT

MX073-03

COMPONENTS

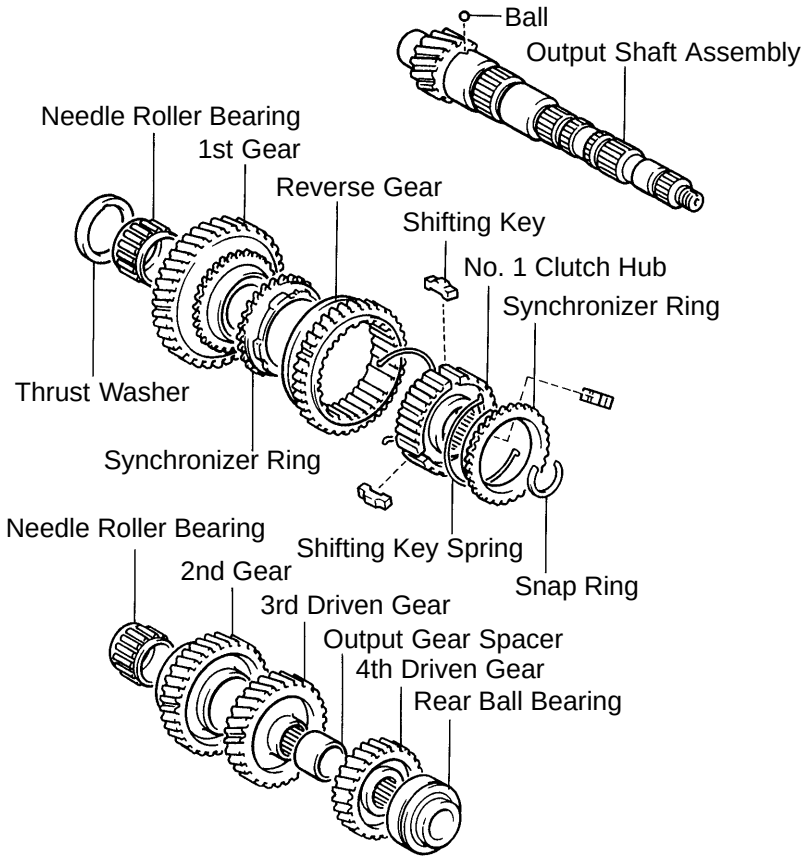

Q06509

MX074-03

DISASSEMBLY

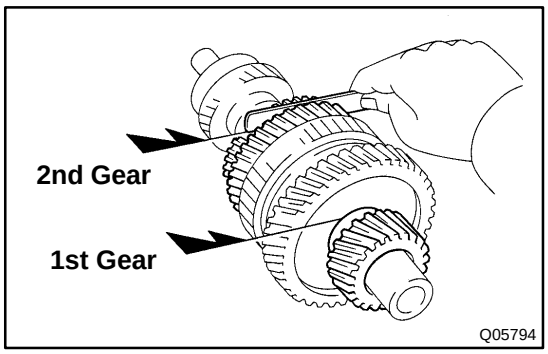

1. INSPECT 1ST AND 2ND GEARS THRUST CLEARANCE

Using a feeler gauge, measure the thrust clearance.

Standard clearance:
1st gear: 0.10 - 0.40 mm (0.0039 - 0.0157 in.)
2nd gear: 0.10 - 0.55 mm (0.0039 - 0.0217 in.)
Maximum clearance:
1st gear: 0.40 mm (0.0157 in.)
2nd gear: 0.55 mm (0.0217 in.)

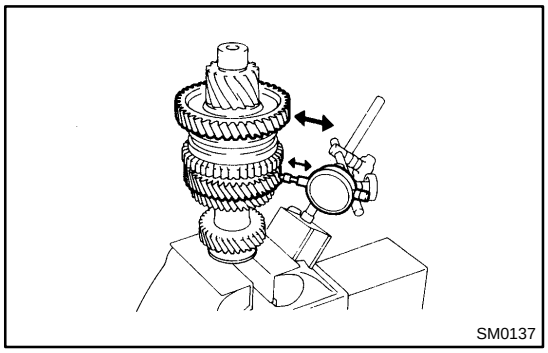

2. INSPECT 1ST AND 2ND GEARS RADIAL CLEARANCE

Using a dial indicator, measure the radial clearance between the gear and shaft.

Standard clearance:
KOYO made
0.015 - 0.058 mm (0.0006 - 0.0023 in.)
NSK made:
0.015 - 0.056 mm (0.0006 - 0.0022 in.)
KOYO made: 0.058 mm (0.0023 in.)
NSK made: 0.056 mm (0.0022 in.)

If the clearance exceeds the maximum, replace the gear, needle roller bearing or shaft.

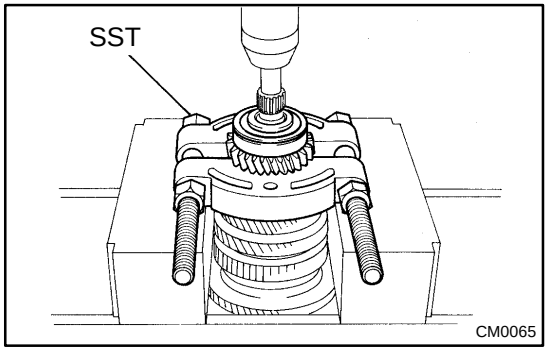

3. REMOVE REAR BALL BEARING, 4TH DRIVEN GEAR AND OUTPUT GEAR SPACER FROM OUTPUT SHAFT

(a) Using SST and a press, remove the rear ball bearing and 4th driven gear.
SST 09950-00020

(b) Remove the output gear spacer.

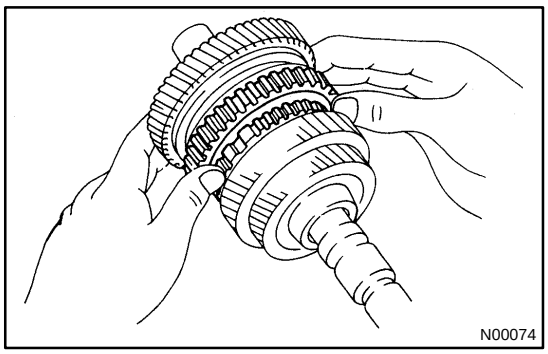

4. REMOVE 3RD DRIVEN GEAR, 2ND GEAR, NEEDLE ROLLER BEARING AND SYNCHRONIZER RING

(a) Shift the reverse gear into the 1st gear.

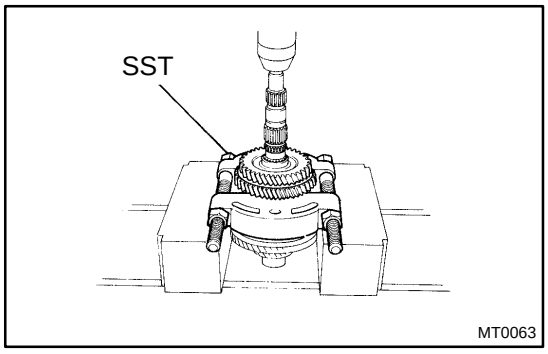

(b) Using SST and a press, remove the 3rd driven gear and 2nd gear.
SST 09950-00020

(c) Remove the needle roller bearing and synchronizer ring.

5. REMOVE SNAP RING

Using 2 screwdrivers and a hammer, tap out the snap ring.

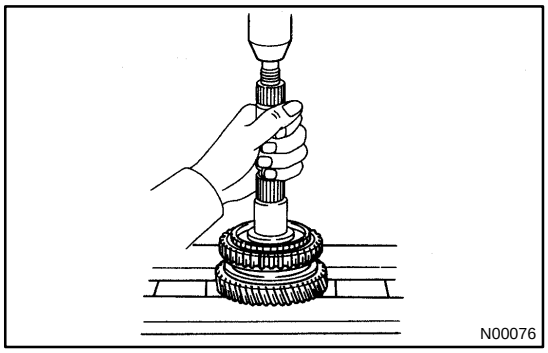

6. REMOVE REVERSE GEAR ASSEMBLY, 1ST GEAR, SYNCHRONIZER RING, NEEDLE ROLLER BEARING, THRUST WASHER AND BALL

(a) Using a press, remove the reverse gear assembly, 1st gear and synchronizer ring.

(b) Remove the needle roller bearing, thrust washer and ball.

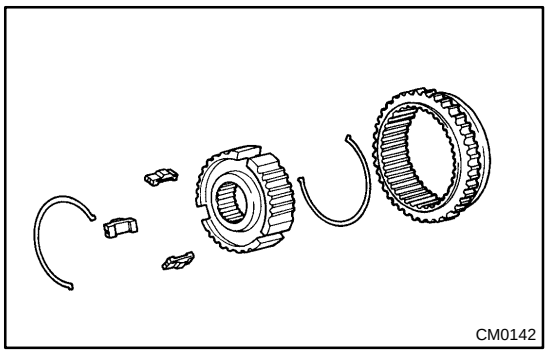

7. DISASSEMBLE REVERSE GEAR ASSEMBLY

(a) Using a screwdriver, remove the 2 shifting key springs and 3 shifting keys from the No. 1 clutch hub.

(b) Remove the reverse gear from the No. 1 clutch hub.

MX075-04

INSPECTION

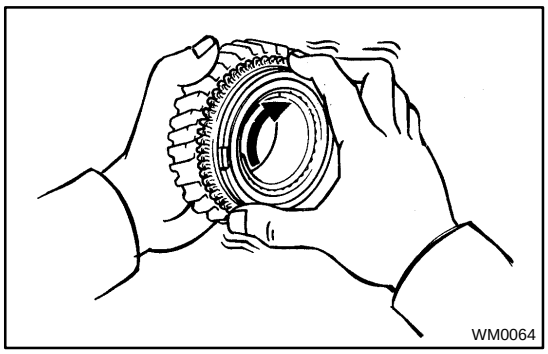
WM0064

1. INSPECT SYNCHRONIZER RING

(a) Check for wear or damage.

(b) Check the braking effect of the synchronizer ring. Turn the synchronizer ring in one direction while pushing it to the gear cone. Check that the ring locks.

If the braking effect is insufficient, apply a small amount of the fine lapping compound between the synchronizer ring and gear cone. Lightly rub the synchronizer ring and gear cone together.

NOTICE:

Ensure the fine lapping compound is completely washed off after rubbing.

(c) Check again the braking effect of the synchronizer ring.

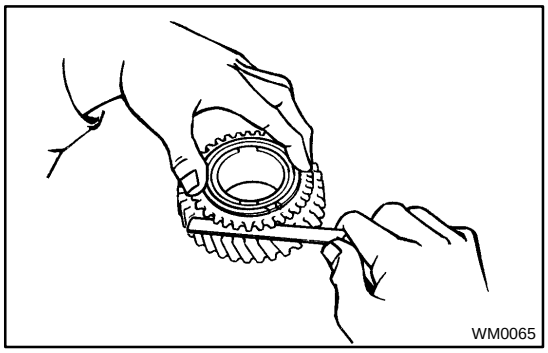
WM0065

(d) Using a feeler gauge, measure the clearance between the synchronizer ring back and gear spline end.

Minimum clearance: 0.75 mm (0.0295 in.)

If the clearance is less than the minimum, replace the synchronizer ring and apply a small amount of the fine lapping compound on gear cone.

NOTICE:

Ensure the fine lapping compound is completely washed off after rubbing.

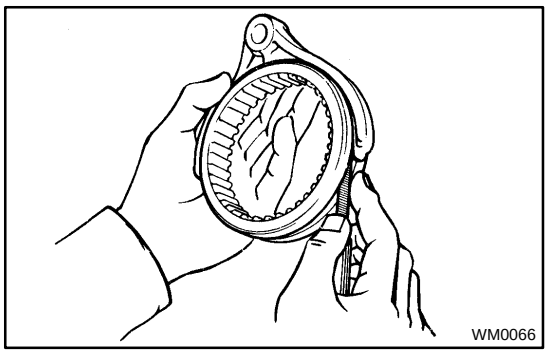
WM0066

2. INSPECT SHIFT FORK AND REVERSE GEAR CLEARANCE

Using a feeler gauge, measure the clearance between the reverse gear and shift fork.

Maximum clearance: 0.35 mm (0.014 in.)

If the clearance exceeds the maximum, replace the shift fork or reverse gear.

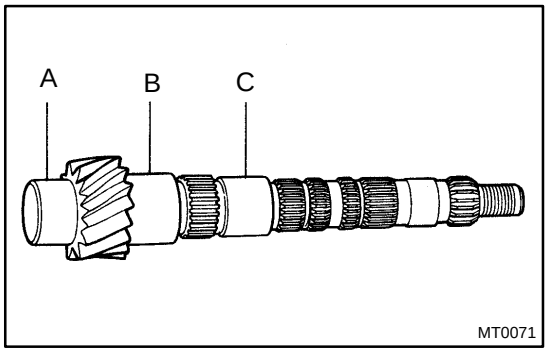

MT0071

3. INSPECT OUTPUT SHAFT

(a) Check the output shaft for wear or damage.

(b) Using a micrometer, measure the outer diameter of the output shaft journal surface.

Minimum outer diameter:

Part A: 32.985 mm (1.2986 in.)

Part B: 37.985 mm (1.4955 in.)

Part C: 31.985 mm (1.2592 in.)

If the outer diameter is less than the minimum, replace the output shaft.

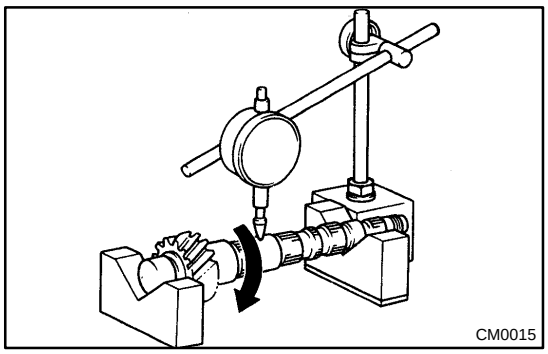

(c) Using a dial indicator, check the shaft runout.
Maximum runout: 0.03 mm (0.0012 in.)

If the runout exceeds the maximum, replace the output shaft.

MX076-03

REASSEMBLY

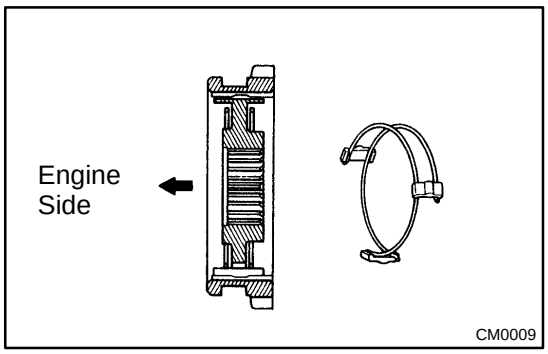

HINT:

Coat all of the sliding and rotating surfaces with gear oil before reassembly.

1. ASSEMBLE REVERSE GEAR ASSEMBLY

(a) Install the 3 shifting keys and reverse gear to the No. 1 clutch hub.

(b) Install the 2 shifting key springs under the shifting keys.

NOTICE:

Position the shifting key springs so that their end gaps are not in line.

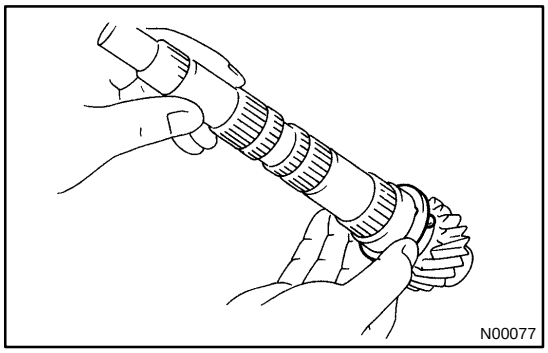

2. INSTALL BALL, THRUST WASHER, NEEDLE ROLLER BEARING, 1ST GEAR, SYNCHRONIZER RING AND REVERSE GEAR ASSEMBLY TO OUTPUT SHAFT

(a) Install the ball to the output shaft.

(b) Fit the thrust washer groove securely over the locking ball when installing the thrust on the output shaft.

(c) Apply gear oil to the needle roller bearing and install it.

(d) Install the 1st gear and synchronizer ring.

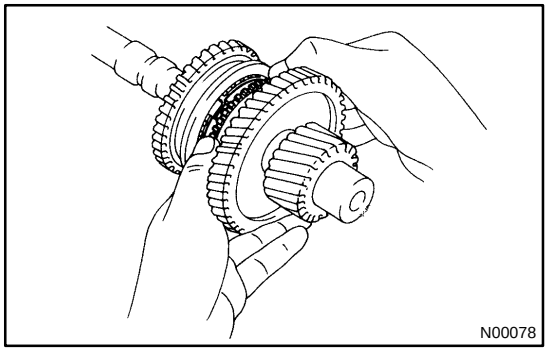

(e) Place the reverse gear assembly and align the synchronizer ring slots with the shifting keys.

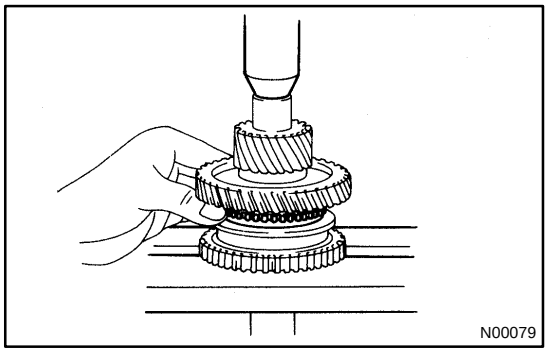

(f) Using a press, install the reverse gear assembly.

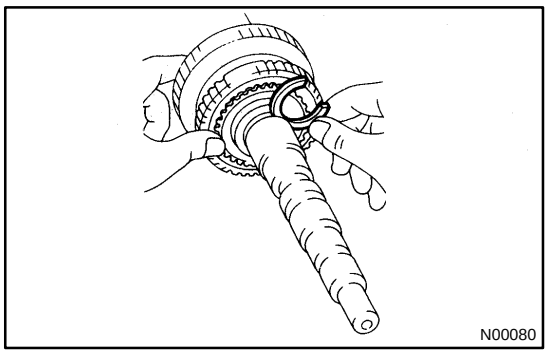

3. INSTALL SNAP RING

(a) Select a snap ring that allows the minimum axial play.

Mark	Thickness mm (in.)	Mark	Thickness mm (in.)
A	2.50 (0.0984)	D	2.68 (0.1055)
B	2.56 (0.1008)	E	2.74 (0.1079)
C	2.62 (0.1031)	F	2.80 (0.1102)

(b) Using a screwdriver and hammer, tap in the snap ring.

4. INSPECT 1ST GEAR THRUST CLEARANCE
(See page MX-31)

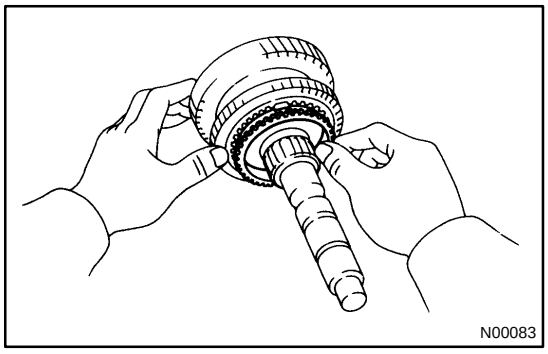

5. INSTALL NEEDLE ROLLER BEARING, SYNCHRONIZER RING, 2ND GEAR AND 3RD DRIVEN GEAR

(a) Apply gear oil to the needle roller bearing and install it.

(b) Place the synchronizer ring on the reverse gear assembly and align the ring slots with the shifting keys.

(c) Install the 2nd gear.

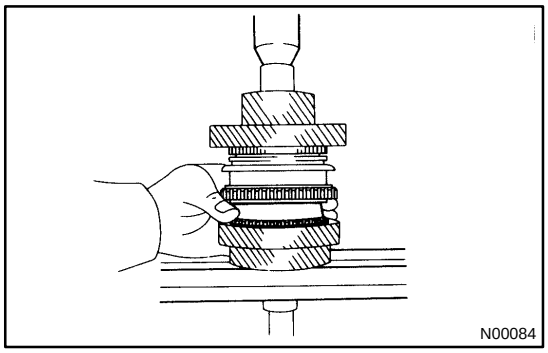

(d) Using a press, install the 3rd driven gear.

6. INSPECT 2ND GEAR THRUST CLEARANCE
(See page MX-31)

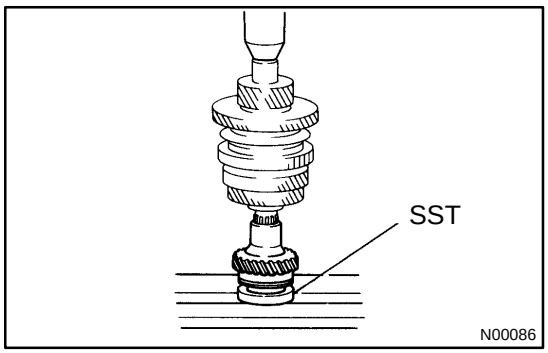

7. INSTALL OUTPUT GEAR SPACER, 4TH DRIVEN GEAR AND REAR BALL BEARING

(a) Install the output gear spacer.

(b) Using SST and a press, install the 4th driven gear and rear ball bearing.
SST 09608-00071

SHIFT AND SELECT LEVER SHAFT

MX077-03

COMPONENTS

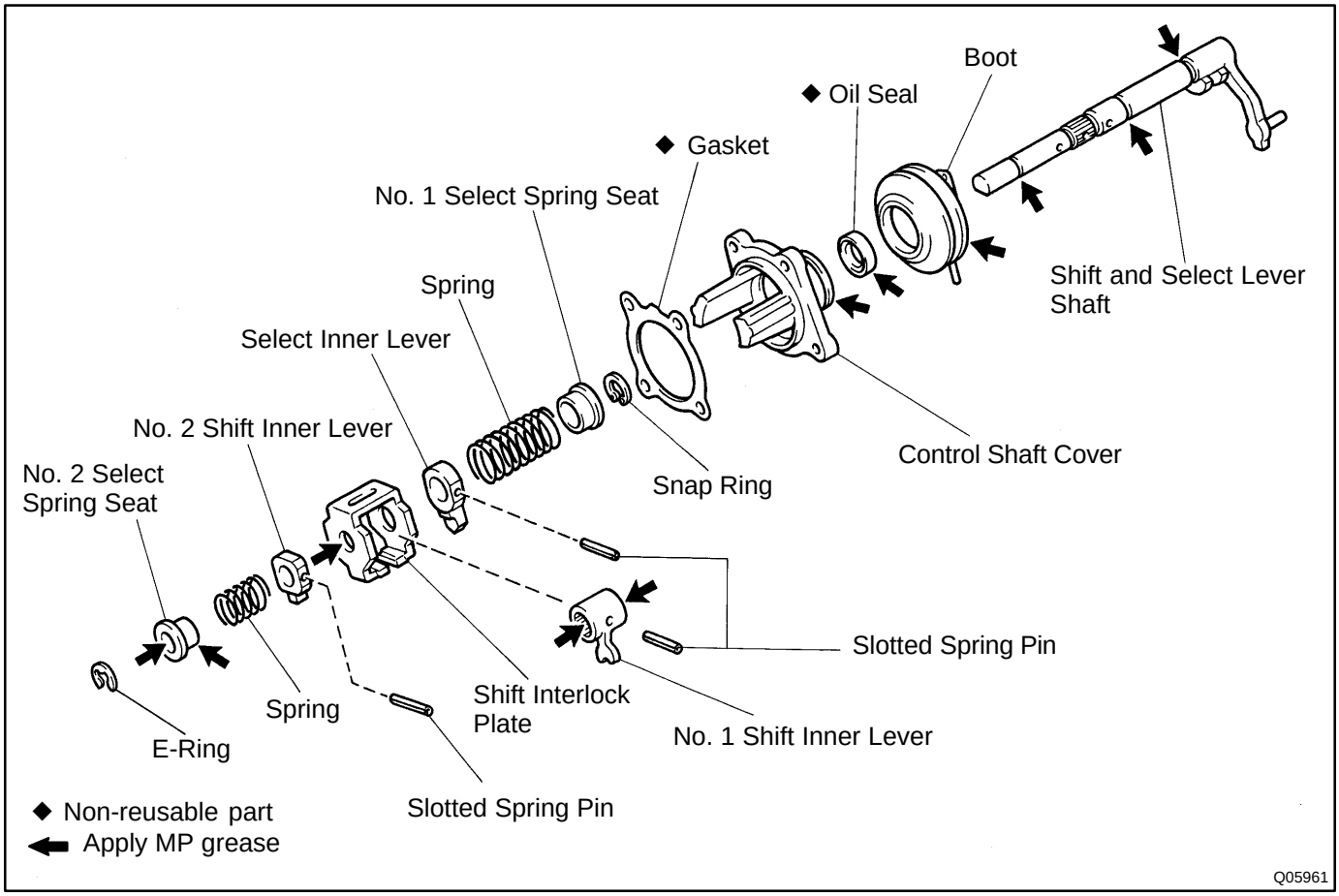

SHIFT LEVER AND CONTROL CABLE

MX07B-03

COMPONENTS

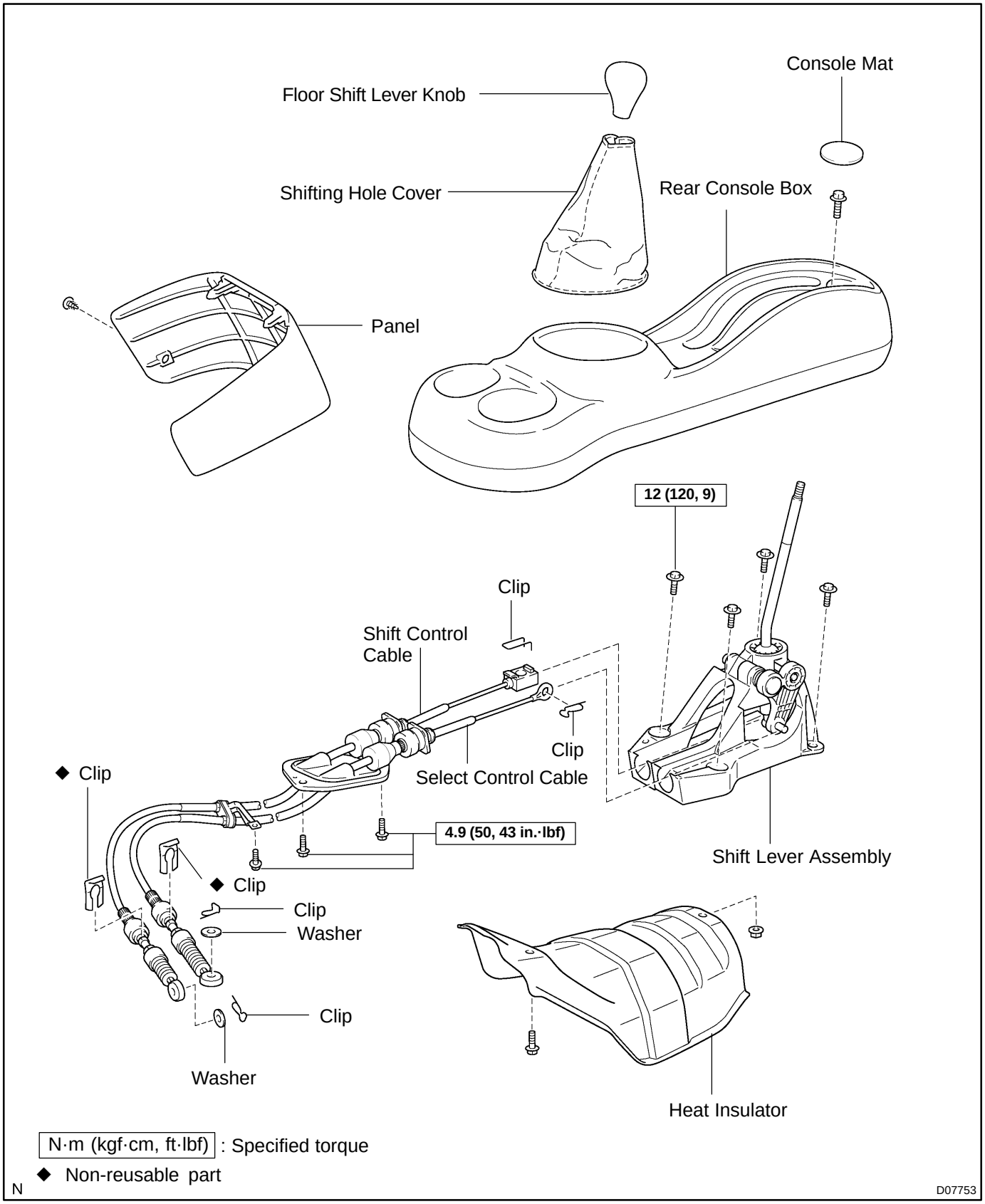

TROUBLESHOOTING

MX06R-03

PROBLEM SYMPTOMS TABLE

Use the table below to help you find the cause of the problem. The numbers indicate the priority of the likely cause of the problem. Check each part in order. If necessary, replace these parts.

Symptom	Suspect Area	See page
Noise	14.Oil (Level low)	MX-4
	15.Oil (Wrong)	MX-4
	16.Gear (Worn or damaged)	MX-9
	17.Bearing (Worn or damaged)	MX-9
Oil leakage	1. Oil (Level too high)	MX-4
	2. Gasket (Damaged)	MX-9
	3. Oil seal (Worn or damaged)	MX-9
	4. O-Ring (Worn or damaged)	MX-9
Hard to shift or will not shift	1. Control cable (Faulty)	MX-44
	2. Synchronizer ring (Worn or damaged)	MX-23 MX-30
	3. Shift key spring (Damaged)	MX-23 MX-30
Jumps out of gear	1. Locking ball spring (Damaged)	MX-9
	2. Shift fork (Worn)	MX-9
	3. Gear (Worn or damaged)	MX-9
	4. Bearing (Worn or damaged)	MX-9

PP0E4-04

EQUIPMENT

Voltmeter	
Ammeter	
Ohmmeter	
Test lead	
Thermometer	Thermistor
Torque wrench	
Dial indicator	Magnetic clutch
Plastic hammer	Magnetic clutch

PP0E5-04

LUBRICANT

Item	Capacity	Classification
Compressor oil	-	ND-OIL 8 or equivalent
When replacing condenser	40 cc (1.4 fl. oz.)	
When replacing evaporator	40 cc (1.4 fl. oz.)	

PP26H-01

RECOMMENDED TOOLS

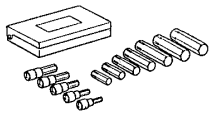	09040-0001 1	Hexagon Wrench Set .	Expansion valve
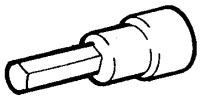	(09043-20050)	Socket Hexagon Wrench 5.	5.0 mm (0.20 in.)
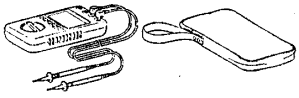	09082-00040	TOYOTA Electrical Tester.	
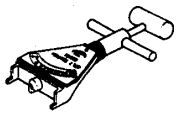	09216-00021	Belt Tension Gauge .	
	09216-00030	Belt Tension Gauge Cable .	

AIR CONDITIONING

PP3H7-01

SST (Special Service Tools)

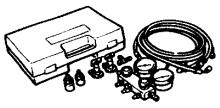	07110-58060	Air Conditioner Service Tool Set	
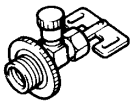	(07117-58060)	Refrigerant Drain Service Valve	
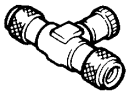	(07117-58070)	T-Joint	
	(07117-58080)	Quick Disconnect Adapter	
	(07117-58090)	Quick Disconnect Adapter	
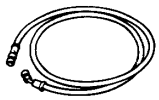	(07117-88060)	Refrigerant Charging Hose	
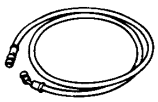	(07117-88070)	Refrigerant Charging Hose	
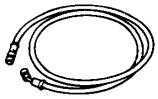	(07117-88080)	Refrigerant Charging Hose	
	07112-66040	Magnetic Clutch Remover	
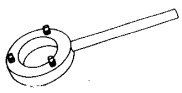	07112-76050	Magnetic Clutch Stopper	
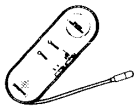	07116-38360	Gas Leak Detector Assembly	
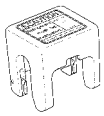	09870-00015	A/C Quick Joint Puller No.1	Suction tube (LHD only)

	09870-00025	A/C Quick Joint Puller No.2	Liquid tube (LHD only)
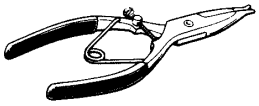	95994-10020	Snap Ring Pliers (DENSO Part No.)	

PP26K-01

EQUIPMENT

Straight edge	Torque converter clutch
Vernier calipers	Torque converter clutch
Dial indicator or dial indicator with magnetic base	Drive plate
Punch	
Torque wrench	

PP26L-04

LUBRICANT

Item	Capacity	Classification
Automatic transaxle fluid		
Dry fill	6.85 liters (7.24 US qts, 6.03 lmp.qts)	ATF Type T-IV
Drain and refill	2.9 liters (3.1 US qts, 2.6 lmp.qts)	

PP26J-04

RECOMMENDED TOOLS

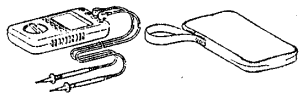	09082-00040	TOYOTA Electrical Tester.	
	09090-04020	Engine Sling Device	

PP26M-01

SSM (Special Service Materials)

08833-00080	Adhesive 1344 THREE BOND 1344 LOCTITE 242 or equivalent	

AUTOMATIC TRANSAXLE

PP2F1-01

SST (Special Service Tools)

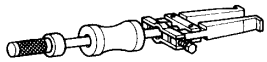	09308-00010	Oil Seal Puller	Side gear shaft oil seal
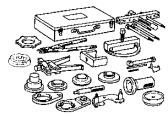	09350-32014	TOYOTA Automatic Transmission Tool Set	
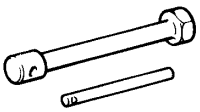	(09351-32010)	One-way Clutch Test Tool	
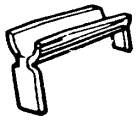	(09351-32020)	Stator Stopper	
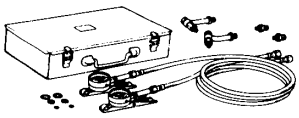	09992-00095	Automatic Transmission Oil Pressure Gauge Set	Line pressure
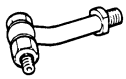	(09992-00231)	Adaptor C	Line pressure
	(09992-00271)	Gauge Assy	Line pressure

PP26E-01

EQUIPMENT

Voltmeter	
Ammeter	
Ohmmeter	
Test lead	
Thermometer	Seat heater
Syphon	Brake fluid level warning switch
Bulb (3.4W)	Fuel sender gauge, Fuel level warning switch
Dry cell battery	Wireless door lock transmitter
Heat light	Seat heater
Torque wrench	
Masking tape	Rear window defogger wire
Tin foil	Rear window defogger wire

PP26D-01

RECOMMENDED TOOLS

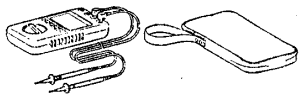	09082-00040	TOYOTA Electrical Tester.	
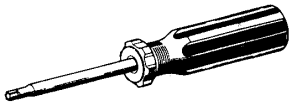	09041-00030	Torx Driver T30 .	Steering wheel pad
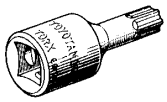	09042-00010	Torx Socket T30 .	Steering wheel pad

PP26F-01

SSM (Special Service Materials)

	08888-88888	DuPont Paste No. 4817 or equivalent	Rear window defogger

BODY ELECTRICAL

PP26C-01

SST (Special Service Tools)

	09843-18040 Diagnosis Check Wire No.2	

PP26P-04

EQUIPMENT

Clip remover	
Torque wrench	
Torx driver	
Hog ring pliers	
Hand riveter	
Tape	To avoid surface damage
Adhesive tape	To avoid surface damage
Adhesive	
Cleaner	
Shop rag	
Knife	
Scraper	
Sealer gun	
Brush	
Putty spatula	
Plastic hammer	
Wooden block or similar object	For tying both piano wire ends
Glass plate or similar object	
Piano wire	
Plastic sheet	To avoid surface damage
Heat light	
Rope (no projections, difficult to break)	Seat belt pretensioner disposal
Tire Width: 185 mm (7.28 in.) Inner diam: 360 mm (14.17 in.)	Seat belt pretensioner disposal
Tire with disc wheel Width: 185mm (7.28 in.) Inner diam: 360 mm (14.17 in.)	Seat belt pretensioner disposal
Vinyl bag	Seat belt pretensioner disposal
Hair dryer	Headlight
Object with the sharp point	Headlight

PP0B0-01

LUBRICANT

Item	Capacity	Classification
MP grease	-	-

PP3H5-01

RECOMMENDED TOOLS

	09070-20010	Moulding Remover .	
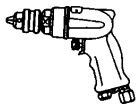	09050-00032	Air Drill	
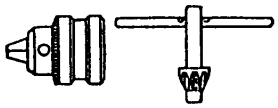	(09050-00210)	Chuck Set	
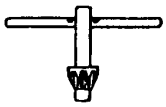	(09050-00220)	Handle	
	09060-60350	Revet Cutter.	
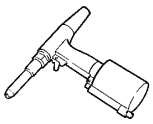	09050-20010	Air Riveter.	

PP26Q-01

SSM (Special Service Materials)

08833-00070	Adhesive 1324, THREE BOND 1324 or equivalent	
08850-00801	Windshield Glass Adhesive Set or equivalent	

BODY

PP3H4-01

SST (Special Service Tools)

	09812-00010	Door Hinge Set Bolt Wrench	
	09804-24010	Luggage Compartment Door Torsion Bar Tool	
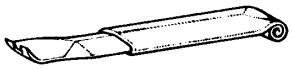	09806-30010	Windshield Moulding Remover	
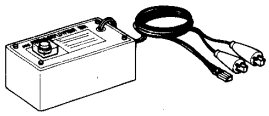	09082-00700	SRS Airbag Deployment Tool	
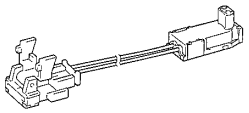	09082-00740	Airbag Deployment Wire Sub-harness No.2	

PP17U-06

EQUIPMENT

Torque wrench	
Micrometer	Brake disc
Dial indicator	Brake disc
Vernier calipers	Brake drum
Brake drum gauge	Brake drum

PP17V-01

LUBRICANT

Item	Capacity	Classification
Brake fluid	-	SAEJ1703 or FMVSS No.116 DOT 3

PP2EM-01

RECOMMENDED TOOLS

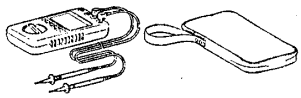	09082-00040 TOYOTA Electrical Tester.	

BRAKE

PP2DP-02

SST (Special Service Tools)

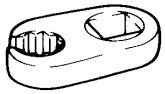	09023-00100	Union Nut Wrench 10 mm	
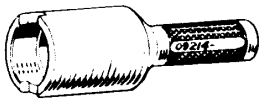	09214-7601 1	Crankshaft Pulley Replacer	
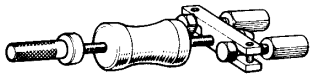	09520-00031	Rear Axle Shaft Puller	
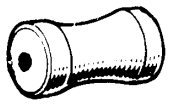	(09520-00040)	Shocker	
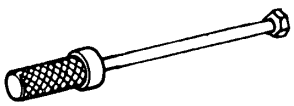	(09521-00020)	Rod with Grip	
	09718-00010	Shoe Hold Down Spring Driver	
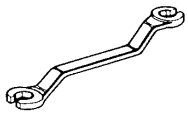	09751-3601 1	Brake Line Union Nut 10 x 12 mm Wrench	
	09709-29018	LSPV Gauge Set	
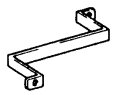	09737-00020	Brake Booster Push Rod Wrench	
	09843-18040	Diagnosis Check Wire No.2	
	09703-30010	Brake Shoe Return Spring Tool	
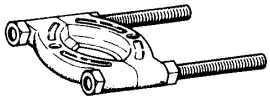	09950-00020	Bearing Remover	

PP1TI-02

EQUIPMENT

Ammeter(A)	
Voltmeter (V)	
Battery specific gravity gauge	Except maintenance-free battery
Torque wrench	
Vernier calipers	Rotor (Slip ring)
Plastic hammer	
29 mm Socket wrench	

PP1TH-02

RECOMMENDED TOOLS

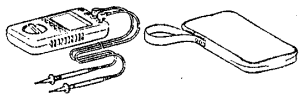	09082-00040 TOYOTA Electrical Tester.	

CHARGING

PP2F9-02

SST (Special Service Tools)

	09285-76010	Injection Pump Camshaft Bearing Cone Replacer	
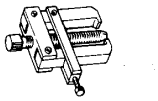	09286-4601 1	Injection Pump Spline Shaft Puller	
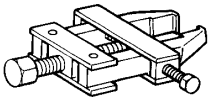	09820-00021	Alternator Rear Bearing Puller	
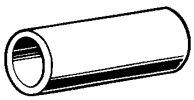	09820-00031	Alternator Rear Bearing Replacer	
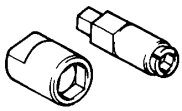	09820-6301 1	Alternator Pulley Set Nut Wrench Set	
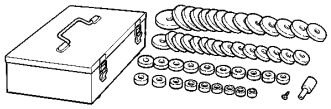	09950-60010	Replacer Set	
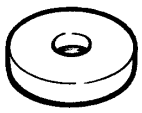	(09951-00500)	Replacer 50	

PP0HE-03

EQUIPMENT

Vernier calipers	
Dial indicator	
Torque wrench	

PP0CK-06

LUBRICANT

Item	Capacity	Classification
Brake fluid	-	SAE J1703 or FMVSS No. 116 DOT3

PP2F6-01

RECOMMENDED TOOLS

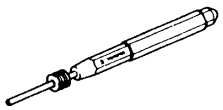	09031-00030	Pin Punch .	Inlet union
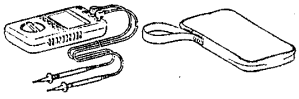	09082-00040	TOYOTA Electrical Tester.	
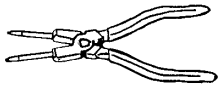	09905-00013	Snap Ring Pliers .	

CLUTCH

PP2EP-01

SST (Special Service Tools)

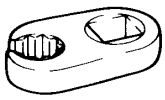	09023-00100	Union Nut Wrench 10 mm	Clutch line
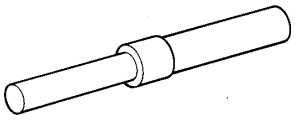	09301-00210	Clutch Guide Tool	
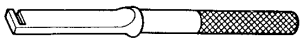	09333-00013	Clutch Diaphragm Spring Aligner	

PP2FI-01

COOLANT

Item		Capacity	Classification
Engine coolant	M/T	4.4 liters (4.7 US qts, 3.9 lmp. qts)	Ethylene-glycol base
	A/T	4.3 liters (4.5 US qts, 3.8 lmp. qts)	

PP2FH-01

EQUIPMENT

Heater	ECT switch, Thermostat
Radiator cap tester	
Thermometer	ECT switch, Thermostat
Torque wrench	
Vernier calipers	

PP2FG-01

RECOMMENDED TOOLS

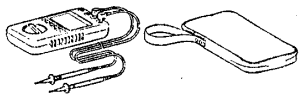	09082-00040 TOYOTA Electrical Tester.	

COOLING

PP2FF-01

SST (Special Service Tools)

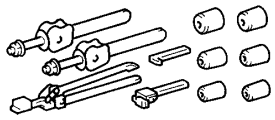	09230-01010	Radiator Service Tool Set	
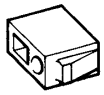	09231-14010	Punch	
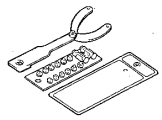	09960-10010	Variable Pin Wrench Set	
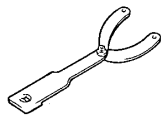	(09962-01000)	Variable Pin Wrench Arm Assy	
	(09963-00600)	Pin 6	

EMISSION CONTROL

PP2FE-01

EQUIPMENT

Torque wrench	
Vacuum gauge	
Pressure gauge	
Hose clipper	

PP2FC-01

EQUIPMENT

Abrasive compound	Valve
Caliper gauge	
CO/HC meter	
Compression gauge	
Connecting rod aligner	
Cylinder gauge	
Dial indicator	
Dye penetrant	
Engine tune-up tester	
Groove cleaning tool	Piston ring groove
Heater	
Magnetic finger	
Micrometer	
OBDII scan tool	
Pin hole grinder	Piston pin hole of piston
Piston ring compressor	
Piston ring expander	
Plastigage	
Precision straight edge	
Press	
Ridge reamer	Cylinder
Soft brush	
Solvent	
Spring tester	Valve spring
Steel square	Valve spring
Thermometer	
Torque wrench	
Torx wrench socket set	Stud bolt
Valve seat cutter	
V-block	
Vernier calipers	
Wire brush	Valve

PP2FB-01

RECOMMENDED TOOLS

	09090-04020	Engine Sling Device	
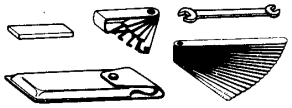	09200-00010	Engine Adjust Kit .	
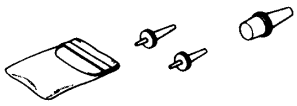	09258-00030	Hose Plug Set .	

PP2FD-01

SSM (Special Service Materials)

08826-00080	Seal Packing Black or equivalent (FIPG)	
08826-00100	Seal Packing 1282B, THREE BOND 1282B or equivalent (FIPG)	
08833-00070	Adhesive 1324, THREE BOND 1324 or equivalent	

ENGINE MECHANICAL

PP2FA-02

SST (Special Service Tools)

	09032-00100	Oil Pan Seal Cutter	
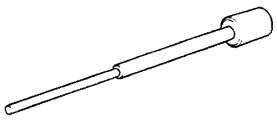	09201-01055	Valve Guide Bushing Remover & Re placer 5.5	
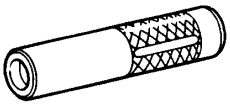	09201-41020	Valve Stem Oil Seal Replacer	
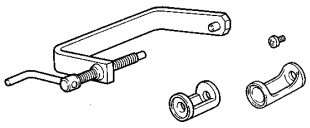	09202-70020	Valve Spring Compressor	
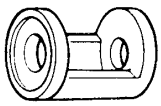	(09202-00010)	Attachment	
	09213-7001 1	Crankshaft Pully Holding Tool	
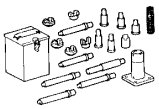	09221-25026	Piston Pin Remover & Replacer	
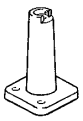	(09221-00021)	Body	
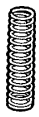	(09221-00030)	Spring	
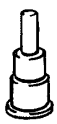	(09221-00141)	Guide H	
	(09221-00150)	Bushing ”D”	
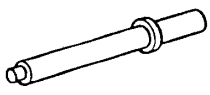	(09221-00190)	Guide ”K”	

	09222-30010	Connecting Rod Bushing Remover & Replacer	
	09223-15030	Oil Seal & Bearing Replacer	
	09330-00021	Companion Flange Holding Tool	
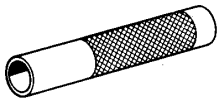	09612-2201 1	Tilt Handle Bearing Replacer	
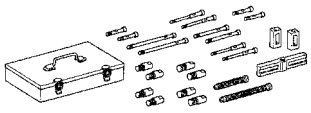	09950-50013	Puller C Set	
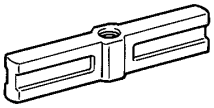	(09951-05010)	Hanger 150	
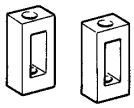	(09952-05010)	Slide Arm	
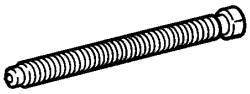	(09953-05020)	Center Bolt 150	
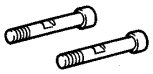	(09954-05021)	Claw No.2	
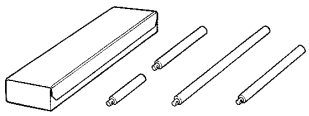	09950-70010	Handle Set	
	(09951-07100)	Handle 100	

PP2FO-01

EQUIPMENT

Spark plug cleaner	

IGNITION

RECOMMENDED TOOLS

PP2FN-01

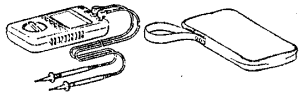	09082-00040 TOYOTA Electrical Tester.	
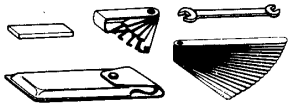	09200-00010 Engine Adjust Kit .	

PP2FK-01

EQUIPMENT

Oil pressure gauge	
Torque wrench	
Feeler gauge	
Straight edge	

PP2FL-01

LUBRICANT

Item		Capacity	Classification
Engine oil			API grade SH Energy-conserving II or SJ, Energy-conserving or ILSAC multigrade engine oil. Recommended viscosity is as shown in the illustration. If SAE 10W-30 or a higher viscosity engine oil is used in extremely low temperatures, the engine may become difficult to start, so SAE 5W-30 engine oil is recommended.
Drain and refill	w/ Oil filter change	3.7 liters (3.9 US qts, 3.3 lmp.qts)	
	w/o Oil filter change	3.5 liters (3.7 US qts, 3.1 lmp.qts)	
Dry fill		4.1 liters (4.3 US qts, 3.6 lmp.qts)	

PP2FM-01

SSM (Special Service Materials)

08833-00080	Adhesive 1344 THREE BOND 1344 LOCTITE 242 or equivalent	Oil pressure switch

LUBRICATION

PP2FJ-01

SST (Special Service Tools)

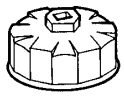	09228-06501 Oil Filter Wrench	
	09816-30010 Oil Pressure Switch Socket	

MAINTENANCE

PP0E6-02

EQUIPMENT

Mirror	Brake hose
Torque wrench	

PP150-02

EQUIPMENT

Dial indicator with magnetic base	
Feeler gauge	
Micrometer	
Torque wrench	
Magnetic finger	
Wooden block or similar object	

PP151-01

LUBRICANT

Item	Capacity	Classification
Manual transaxle oil (w/ Differential oil)	1.9 liters (2.0 US qts, 1.7 Imp. qts)	API GL-4 or GL-5 SAE 75W-90

PP2EO-01

RECOMMENDED TOOLS

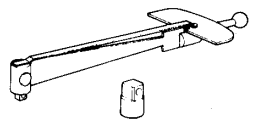	09025-00010	Torque Wrench (30 kgf-cm)	Differential preload
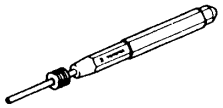	09031-00030	Pin Punch .	
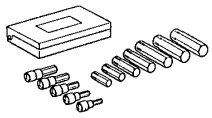	09040-0001 1	Hexagon Wrench Set .	
	09090-04020	Engine Sling Device	
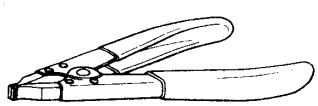	09905-00012	Snap Ring No.1 Expander .	

PP152-02

SSM (Special Service Materials)

08826-00090	Seal Packing 1281, THREE BOND 1281 or equivalent (FIPG)	Transmission case x Transaxle case Transmission case x Transmission case cover
08833-00080	Adhesive 1344 THREE BOND 1344 LOCTITE 242 or equivalent	

MANUAL TRANSAXLE

PP2EN-01

SST (Special Service Tools)

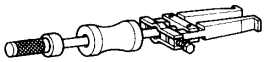	09308-00010	Oil Seal Puller	Output shaft front bearing
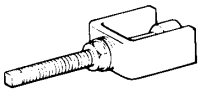	09309-12020	5th Driven Gear Replacer	
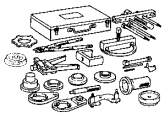	09350-32014	TOYOTA Automatic Transmission Tool Set	
	(09351-32090)	Oil Seal Remover & Replacer	Differential side bearing
	(09351-321 11)	Side Bearing Race Replacer	Differential side bearing oil seal (Transmission case side)
	(09351-32120)	Overdrive Bearing Replacer	Differential side bearing
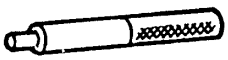	(09351-32130)	Handle	
	(09351-32150)	Oil Seal Replacer	Differential side bearing oil seal (Transaxle case side)
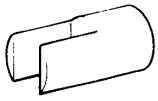	09564-3201 1	Differential Preload Adaptor	
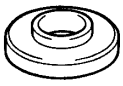	09608-00071	Drive Pinion Rear Bearing Cone Replacer	Input shaft rear ball bearing 4th driven gear and rear ball bearing
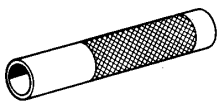	09612-2201 1	Tilt Handle Bearing Replacer	No. 3 hub sleeve assembly
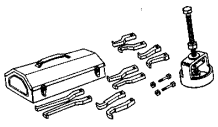	09612-65014	Steering Worm Bearing Puller	Input shaft front bearing Input shaft front oil seal Differential side bearing oute race

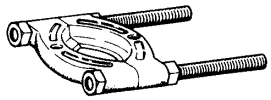	09950-00020	Bearing Remover	
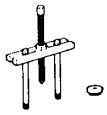	09950-00030	Bearing Remover Attachment	
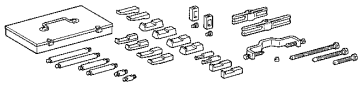	09950-4001 1	Puller B Set	
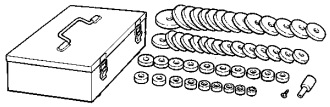	09950-60010	Replacer Set	
	(09951-00360)	Replacer 36	Input shaft front oil seal Differential side bearing
	(09951-00460)	Replacer 46	Input shaft front bearing
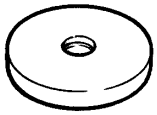	(09951-00620)	Replacer 62	Output shaft front bearing
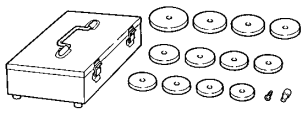	09950-60020	Replacer Set No.2	
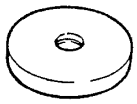	(09951-00680)	Replacer 68	Differential side bearing outer race (Transaxle case side)
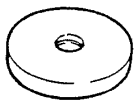	(09951-00710)	Replacer 71	Differential side bearing outer race (Transmission case side)
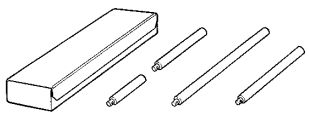	09950-70010	Handle Set	
	(09951-07150)	Handle 150	

PP0MS-01

EQUIPMENT

Bolt Length: 35 mm (1.38 in.) Pitch: 1.0 mm (0.039 in.) Diam.: 6.0 mm (0.236 in.)	Airbag disposal
Tire Width: 185 mm (7.28 in.) Inner diam.: 360 mm (14.17 in.)	Airbag disposal
Tire with disc wheel Width: 185 mm (7.28 in.) Inner diam.: 360 mm (14.17 in.)	Airbag disposal
Torque wrench	
Vinyl bag	Airbag disposal

PP1XL-04

RECOMMENDED TOOLS

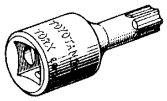	09042-00020	Torx Socket T40 .	Airbag sensor assembly
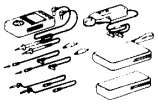	09082-00050	TOYOTA Electrical Tester Set.	
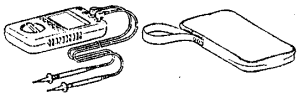	09082-00040	TOYOTA Electrical Tester.	
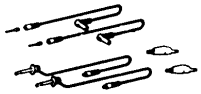	(09083-00150)	Test Lead Set	Seat belt pretensioner connector

SUPPLEMENTAL RESTRAINT SYSTEM

PP2F5-01

SST (Special Service Tools)

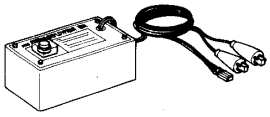	09082-00700	SRS Airbag Deployment Tool	
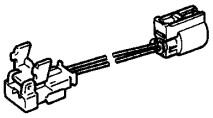	09082-00760	Airbag Deployment Wire Sub-harness No.4	
	09843-18020	Diagnosis Check Wire	

PP0AM-01

EQUIPMENT

Dial indicator with magnetic base	
Drill	
Torque wrench	

PP26B-02

LUBRICANT

Item	Capacity	Application
Front drive shaft		
Inboard joint grease Color=Yellow ocher	125 - 135 g (4.4 - 4.8 oz.)	
Outboard joint grease Color=Black	155 - 170 g (5.5 - 6.0 oz.)	

PP2EH-01

RECOMMENDED TOOLS

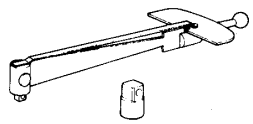	09025-00010	Torque Wrench (30 kgf-cm)	
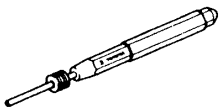	09031-00030	Pin Punch .	
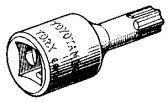	09042-00010	Torx Socket T30 .	
	09090-04020	Engine Sling Device	
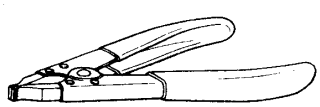	09905-00012	Snap Ring No.1 Expander .	
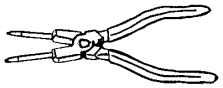	09905-00013	Snap Ring Pliers .	

SUSPENSION AND AXLE

PP2EG-01

SST (Special Service Tools)

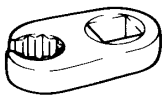	09023-00100	Union Nut Wrench 10 mm	Rear suspension
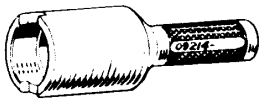	09214-7601 1	Crankshaft Pulley Replacer	Rear axle
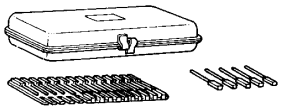	09240-00020	Wire Gauge Set	Front drive shaft
	09309-37010	Transmission Bearing Replacer	Rear suspension
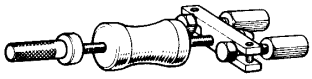	09520-00031	Rear Axle Shaft Puller	
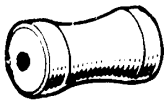	(09520-00040)	Shocker	Front axle Rear axle
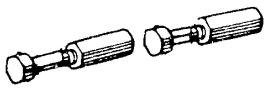	(09521-00010)	Attachment	Front axle
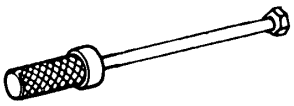	(09521-00020)	Rod with Grip	Front axle Rear axle
	09520-01010	Drive Shaft Remover Attachment	Front drive shaft
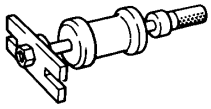	09520-24010	Differential Side Gear Shaft Puller	Front drive shaft
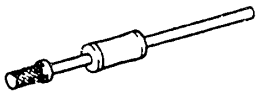	(09520-32040)	Shocker Set	
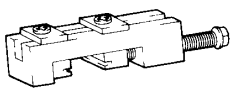	09521-24010	Drive Shaft Boot Clamping Tool	Front drive shaft

	09527-1701 1	Rear Axle Shaft Bearing Remover	Front axle
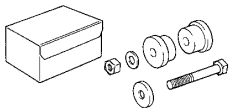	09608-16042	Front Hub Bearing Adjusting Tool	Front drive shaft
	(09608-02021)	Bolt & Nut	
	(09608-02041)	Retainer	
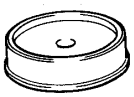	09608-32010	Steering Knuckle Oil Seal Replacer	Front axle
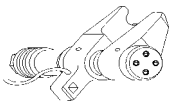	09628-0001 1	Ball Joint Puller	Front axle Front drive shaft Front suspension
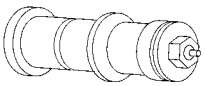	(09628-00030)	Power Unit	
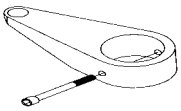	(09628-00040)	Jaw	
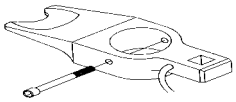	(09628-00050)	Crow A	
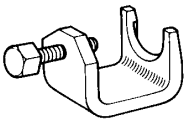	09628-1001 1	Ball Joint Puller	Front axle Rear axle
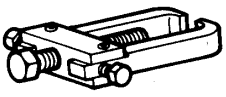	09628-6201 1	Ball Joint Puller	Front axle Front drive shaft Front suspension
	09670-00010	Front Crossmember Guide Tool	Front suspension
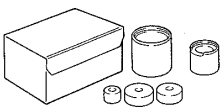	09710-14013	Rear Suspension Bushing Tool Set	Rear suspension

	(09710-00021)	Pipe	
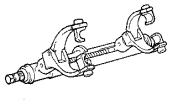	09727-30021	Coil Spring Compressor	Front suspension
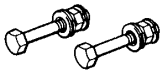	(09727-00010)	Bolt Set	
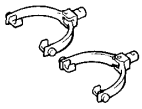	(09727-00021)	Arm Set	
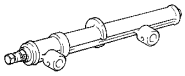	(09727-00031)	Compressor	
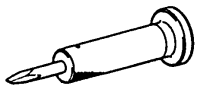	09930-00010	Drive Shaft Nut Chisel	Front axle Front drive shaft
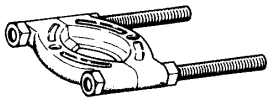	09950-00020	Bearing Remover	Front drive shaft Rear axle
	09950-4001 1	Puller B Set	
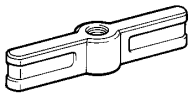	(09951-04010)	Hanger 150	Rear suspension
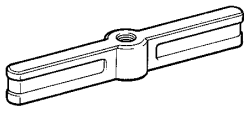	(09951-04020)	Hanger 200	Front axle
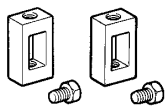	(09952-04010)	Slide Arm	Front axle Rear suspension
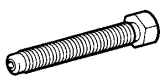	(09953-04010)	Center Bolt 100	Rear suspension
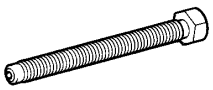	(09953-04020)	Center Bolt 150	Front axle

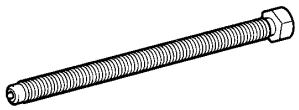	(09953-04030)	Center Bolt 200	Rear suspension
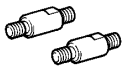	(09954-04010)	Arm 25	Front axle
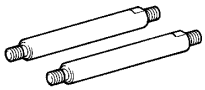	(09954-04020)	Arm 100	Rear suspension
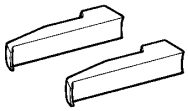	(09955-0401 1)	Claw No.1	Front axle
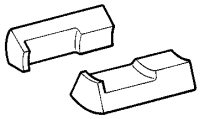	(09955-04031)	Claw No.3	Rear suspension
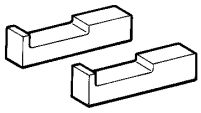	(09955-04051)	Claw No.5	Rear suspension
	(09957-04010)	Attachment	Front axle Rear suspension
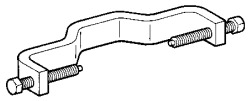	(09958-0401 1)	Holder	Front axle Rear suspension
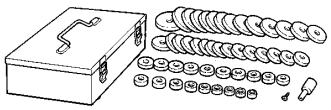	09950-60010	Replacer Set	
	(09951-00370)	Replacer 37	Front axle
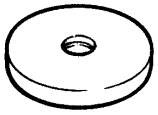	(09951-00560)	Replacer 56	Rear suspension
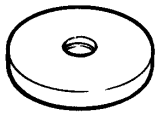	(09951-00600)	Replacer 60	Front axle
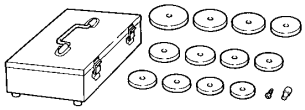	09950-60020	Replacer Set No.2	Front axle

	(09951-00680) Replacer 68	
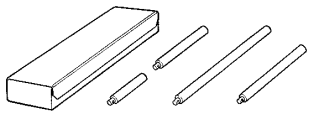	09950-70010 Handle Set	Front axle
	(09951-07150) Handle 150	

PP1WF-01

EQUIPMENT

Carburetor cleaner	Throttle body
Graduated cylinder	Injector
OBD II scan tool	
Soft brush	Throttle body
Sound scope	Injector
Torque wrench	
Vacuum gauge	

PP2FQ-01

RECOMMENDED TOOLS

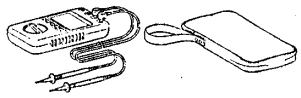	09082-00040	TOYOTA Electrical Tester.	
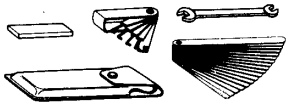	09200-00010	Engine Adjust Kit .	
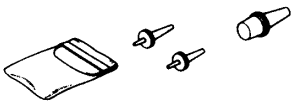	09258-00030	Hose Plug Set .	Plug for the vacumm hose, fuel hose etc.

SFI

PP2FP-01

SST (Special Service Tools)

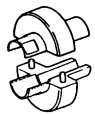	09268-21010	Fuel Hose Puller	
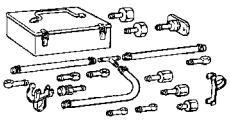	09268-41047	Injection Measuring Tool Set	
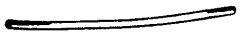	(95336-08070)	Hose	
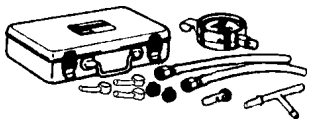	09268-45014	EFI Fuel Pressure Gauge	
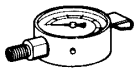	(09268-41200)	Gauge	
	(09268-41220)	Hose	
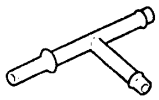	(09268-41250)	T Joint	
	09816-30010	Oil Pressure Switch Socket	
	09842-30080	EFI Inspection Wire ”H”	
	09843-18020	Diagnosis Check Wire	

PP18L-06

EQUIPMENT

Caliper gauge	PS vane pump
Vernier calipers	PS vane pump
Dial indicator	Manual steering gear, PS gear
Feeler gauge	PS vane pump
Micrometer	PS vane pump
Torque wrench	

PP18M-05

LUBRICANT

Item	Capacity	Classification
Power steering fluid (Total)	0.7 liters (0.7 US qts, 0.6 Imp.qts)	ATF DEXRON® II or III

PP18K-04

RECOMMENDED TOOLS

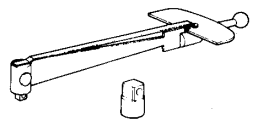	09025-00010	Torque Wrench (30 kgf-cm)	PS vane pump PS gear
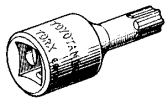	09042-00010	Torx Socket T30 .	Tilt steering column
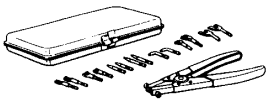	09904-00010	Expander Set .	
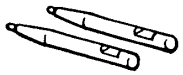	(09904-00050)	No. 4 Claw	
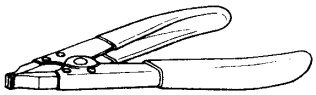	09905-00012	Snap Ring No.1 Expander .	
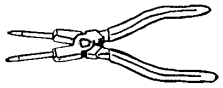	09905-00013	Snap Ring Pliers .	

PP18N-05

SSM (Special Service Materials)

08833-00080	Adhesive 1344 THREE BOND 1344 LOCTITE 242 or equivalent	Manual steering gear PS gear

STEERING

PP26S-05

SST (Special Service Tools)

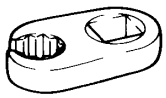	09023-12700	Union Nut Wrench 17mm	PS vane pump
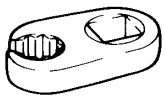	09023-12900	Union Nut Wrench 19mm	PS gear
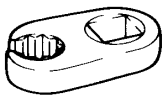	09023-38200	Union Nut Wrench 12mm	PS gear
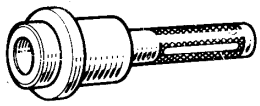	09517-12010	Rear Axle Shaft Oil Seal Replacer	Manual steering gear
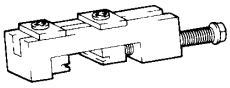	09521-24010	Drive Shaft Boot Clamping Tool	PS gear
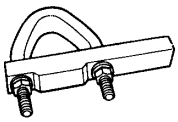	09612-00012	Rack & Pinion Steering Rack Housing Stand	Manual steering gear PS gear
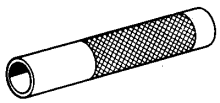	09612-22011	Tilt Handle Bearing Replacer	Tilt steering column
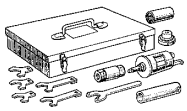	09612-24014	Steering Gear Housing Overhaul Tool Set	
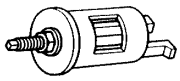	(09613-22011)	Steering Rack Shaft Bushing Puller	PS gear
	(09616-10010)	Steering Pinion Bearing Adjusting Socket	Manual steering gear
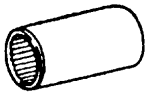	09616-00011	Steering Worm Bearing Adjusting Socket	PS gear
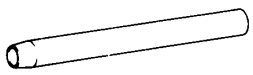	09631-10041	Steering Rack Cover "D"	PS gear

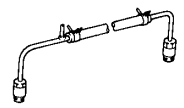	09631-12071	Steering Rack Oil Seal Test Tool	PS gear
	(09633-00010)	Packing	
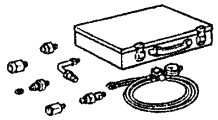	09640-10010	Power Steering Pressure Gauge Set	Power steering fluid
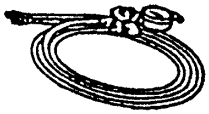	(09641-01010)	Gauge Assy	
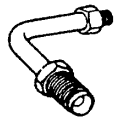	(09641-01030)	Attachment B	
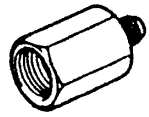	(09641-01060)	Attachment E	
	09670-00010	Front Crossmember Guide Tool	Manual steering gear PS gear
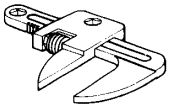	09922-10010	Variable Open Wrench	Manual steering gear PS gear
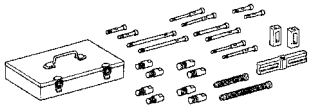	09950-50013	Puller C Set	Tilt steering column
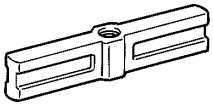	(09951-05010)	Hanger 150	
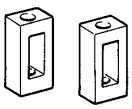	(09952-05010)	Slide Arm	
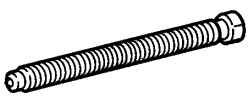	(09953-05020)	Center Bolt 150	
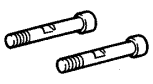	(09954-05021)	Claw No.2	

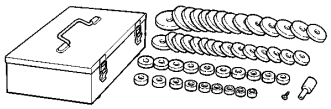	09950-60010	Replacer Set	
	(09951-00210)	Replacer 21	PS gear
	(09951-00240)	Replacer 24	PS gear
	(09951-00280)	Replacer 28	PS vane pump
	(09951-00340)	Replacer 34	PS gear
	(09951-00370)	Replacer 37	PS gear
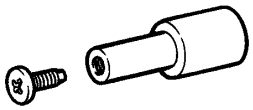	(09952-06010)	Adapter	PS gear
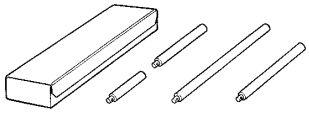	09950-70010	Handle Set	
	(09951-07100)	Handle 100	PS vane pump PS gear
	(09951-07200)	Handle 200	PS gear
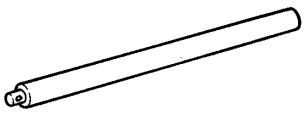	(09951-07360)	Handle 360	PS gear

PP19C-02

EQUIPMENT

Caliper gauge	Center bearing for planetary type
Dial indicator	Commutator
Micrometer	Planet carrier shaft for planetary type
Press	Reduction type
Pull scale	Brush spring
Sandpaper	Commutator
Torque wrench	
V-block	
Vernier calipers	Commutator Brush

PP19B-02

RECOMMENDED TOOLS

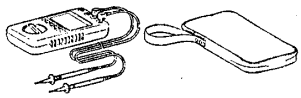	09082-00040	TOYOTA Electrical Tester.	
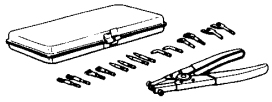	09904-00010	Expander Set .	Planetary type

STARTING

PP2F7-01

SST (Special Service Tools)

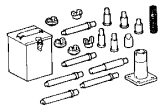	09221-25026 Piston Pin Remover & Replacer	
	(09221-00090) Guide "C"	

AIRBAG SENSOR ASSEMBLY

RS01G-28

COMPONENTS

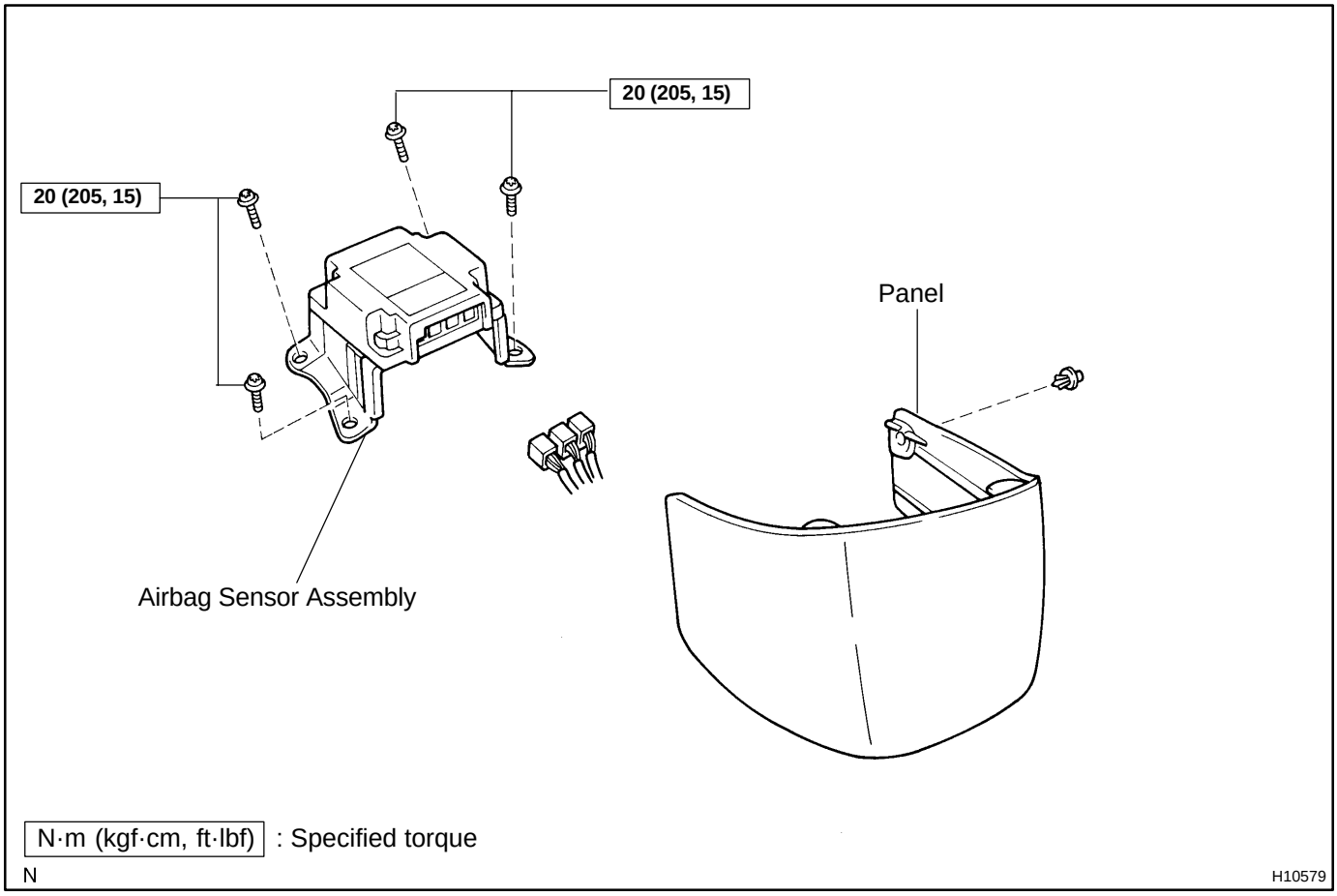

RS05T-02

INSPECTION

1. VEHICLE NOT INVOLVED IN COLLISION

Do a diagnostic system check. (See page DI-239)

2. VEHICLE INVOLVED IN COLLISION AND AIRBAG IS NOT DEPLOYED

Do a diagnostic system check. (See page DI-239)

3. VEHICLE INVOLVED IN COLLISION AND AIRBAG IS DEPLOYED

Replace the airbag sensor assembly. (See page RS-52)

RS0EZ-11

INSTALLATION

NOTICE:

- **Never use SRS parts from another vehicle. When replacing parts, replace them with new parts.**
- **Never reuse the airbag sensor assembly involved in a collision when the airbag has deployed.**
- **Never repair a sensor in order to reuse it.**

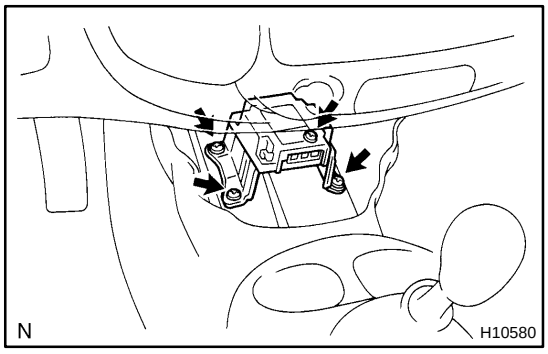

1. INSTALL AIRBAG SENSOR ASSEMBLY

(a) Using a torx wrench, install the airbag sensor assembly with 4 screws.

Torx wrench: T40 (Part No.09042-00020 or locally manufactured tool)

Torque: 20 N·m (205 kgf·cm, 15 ft·lbf)

(b) Connect the airbag sensor connectors.

NOTICE:

- **Connection of the connector is done after the sensor assembly has been installed.**
- **Make sure the sensor assembly is installed with the specified torque.**
- **If the sensor assembly has been dropped, or there are cracks, dents or other defects in the case, bracket or connector, replace the sensor assembly with a new one.**
- **When installing the sensor assembly, take care that the SRS wiring does not interfere with other parts and is not pinched between other parts.**
- **After installing , shake the sensor assembly to check that there is no looseness.**

2. INSTALL PANEL

RS0EY-11

REMOVAL

NOTICE:

Do not open the cover or the case of the ECU and various electrical devices unless absolutely necessary.

(If the IC terminals are touched, the IC may be destroyed by static electricity.)

1. REMOVE PANEL

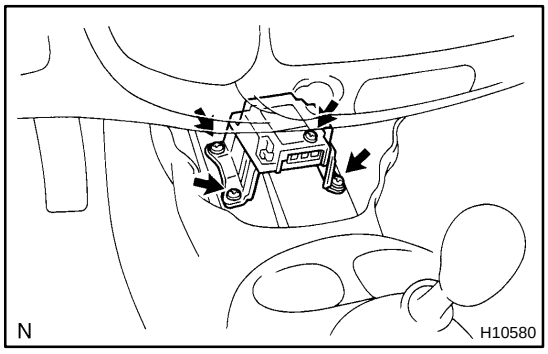

2. REMOVE AIRBAG SENSOR ASSEMBLY

(a) Disconnect the airbag sensor assembly connectors.

NOTICE:

Disconnect the connectors with the sensor assembly installed.

(b) Using a torx wrench, remove the 4 screws and airbag sensor assembly.

Torx wrench: T40 (Part No.09042-00020 or locally manufactured tool)

RS01J-15

REPLACEMENT

REPLACEMENT REQUIREMENTS

In the following cases, replace the airbag sensor assembly.

- If the SRS has been deployed in a collision.
- If the airbag sensor assembly has been found to be faulty in troubleshooting.
- If the airbag sensor assembly has been dropped.

CAUTION:

For removal and installation of the airbag sensor assembly, see page RS-52 and RS-55 . Be sure to follow the correct procedure.

DOOR SIDE AIRBAG SENSOR (2-Door)

RS01L-32

COMPONENTS

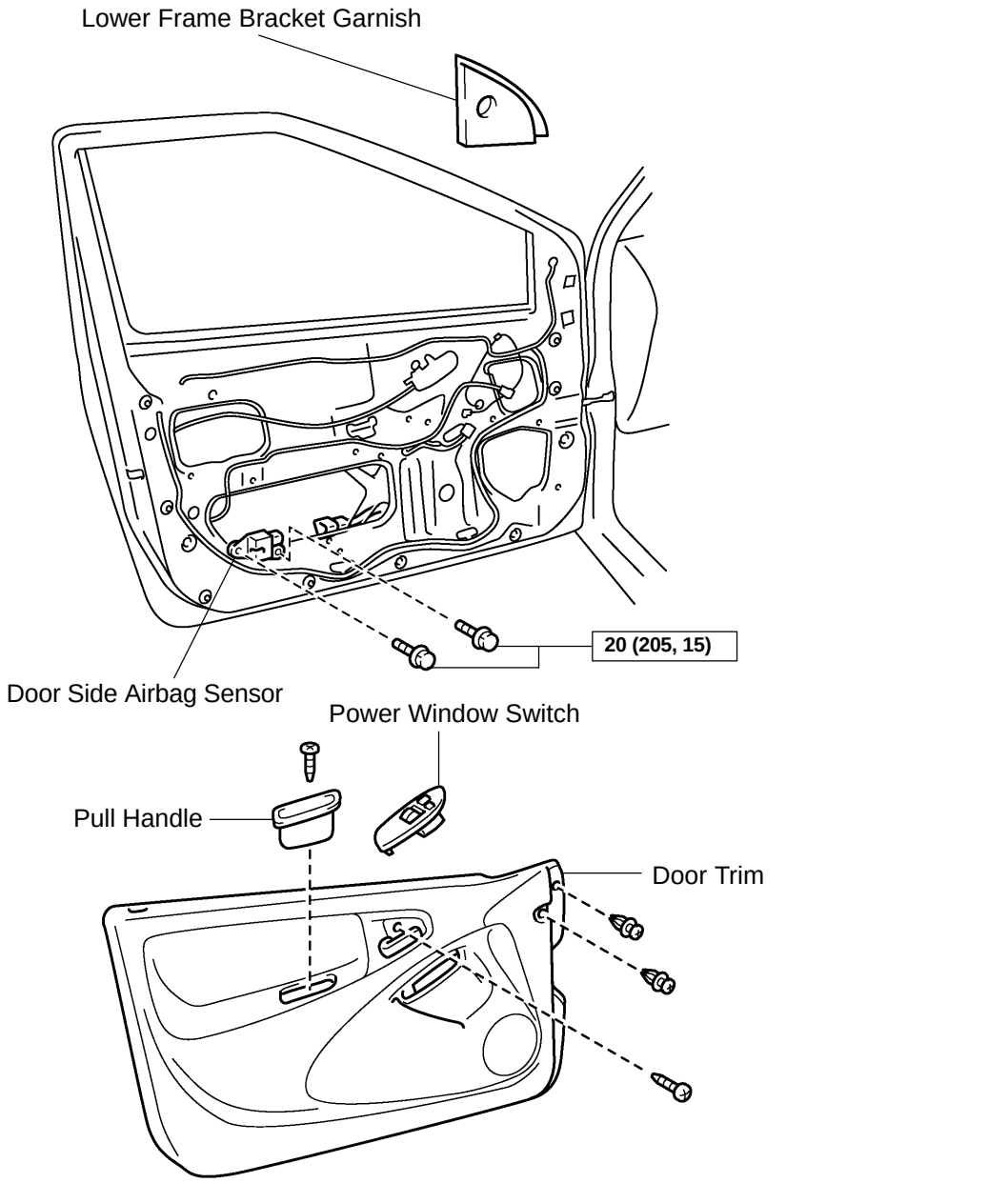

T

N·m (kgf·cm, ft·lbf) : Specified torque

H13122

RS01N-33

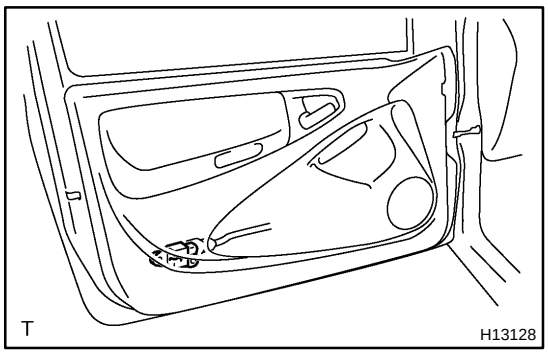

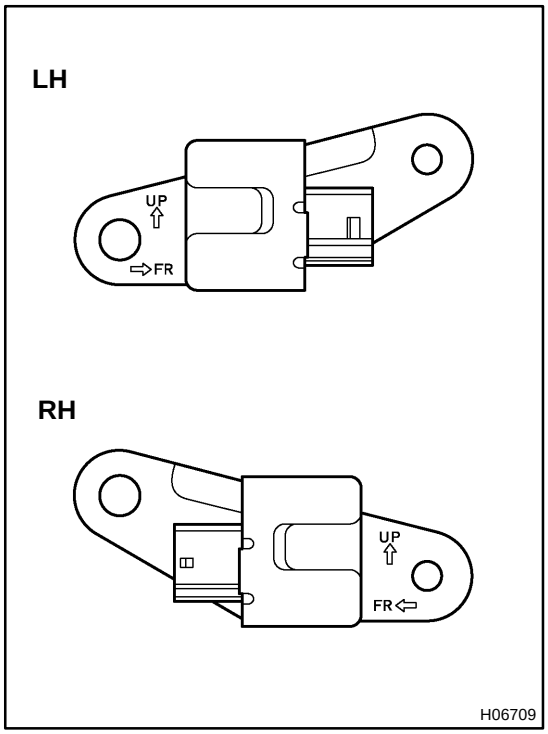

INSPECTION

1. VEHICLES NOT INVOLVED IN COLLISION

Do a diagnostic system check. (See page DI-239)

2. VEHICLES INVOLVED IN COLLISION

(a) Do a diagnostic system check. (See page DI-239)

(b) If the front door or its periphery is damaged, do a visual check for damage to the door side airbag sensor, which includes the following items even if the airbag was not deployed:

- Bracket deformation
- Paint peeling off the bracket
- Cracks, dents or chips in the case
- Cracks, dents, chipping and scratches in the connector
- Peeling off of the label or damage to the serial number

RS0MD-02

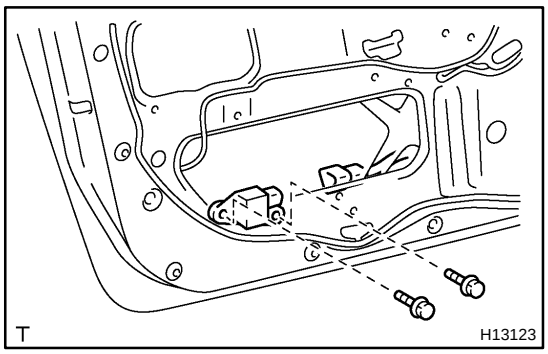

INSTALLATION

HINT:

For step 2 to 6, refer to page BO-14 .

1. INSTALL DOOR SIDE AIRBAG SENSOR

(a) Install the door side airbag sensor with the 2 bolts.
Torque: 20 N·m (205 kgf·cm, 15 ft·lbf)

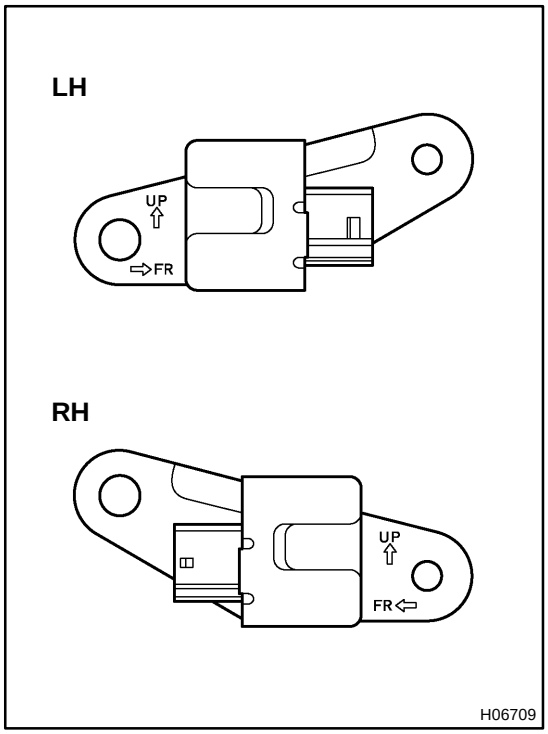

HINT:

When the door side airbag sensor, the arrow on the sensor facing toward the front of the vehicle.

NOTICE:

- **Connection of the connector is done after the sensor has been installed.**
- **Make sure the sensor is installed with the specified torque.**
- **If the sensor has been dropped, or there are cracks, dents or other defects in the case, brackets or connector, replace the removed sensor with new one.**
- **The door side airbag sensor is equipped with an electrical connection check mechanism. Be sure to lock this mechanism securely when connecting the connector. If the connector is not securely locked, a malfunction code will be detected by the diagnostic system.**

(b) Connect the front airbag sensor connector.

2. INSTALL DOOR TRIM

3. INSTALL PULL HANDLE

4. INSTALL LOWER FRAME BRACKET GARNISH

5. w/ Power window:
INSTALL POWER WINDOW SWITCH

6. w/o Power window:
INSTALL REGULATOR HANDLE

RS0EB-04

REMOVAL

NOTICE:

- **If the wiring connector of the SRS is disconnected with the ignition switch at ON or ACC position, DTCs will be recorded.**
- **Never use SRS parts from another vehicle. When replacing parts, replace them with new parts.**
- **Never reuse the sensor involved in a collision when the SRS has deployed.**
- **Never repair a sensor in order to reuse it.**

HINT:

For step 1 to 5, refer to page BO-8 .

1. w/o Power window:
REMOVE REGULATOR HANDLE

2. w/ Power window:
REMOVE POWER WINDOW SWITCH

3. REMOVE LOWER FRAME BRACKET GARNISH

4. REMOVE PULL HANDLE

5. REMOVE DOOR TRIM

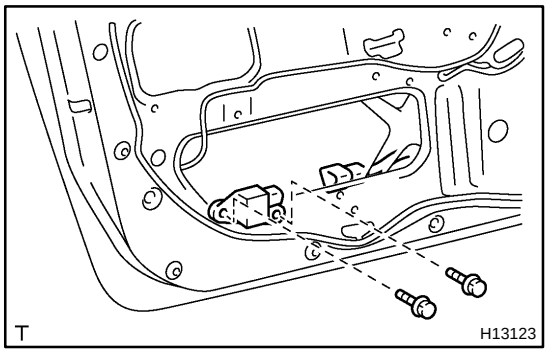

6. REMOVE DOOR SIDE AIRBAG SENSOR

(a) Disconnect the door side airbag sensor connector.

NOTICE:

Disconnect the connector with sensor assembly installed.

(b) Remove the 2 bolts and door side airbag sensor.

RS01O-20

REPLACEMENT

REPLACEMENT REQUIREMENTS

In the following cases, replace the front airbag sensor.

- If the door side airbag sensor has been deployed in a collision.
- If the door side airbag sensor has been found to be faulty in troubleshooting.
- If the door side airbag sensor has been found to be faulty during checking items. (See page RS-58)
- If the door side airbag sensor has been dropped.

CAUTION:

For removal and installation of the door side airbag sensor, see page RS-73 and RS-76 . Be sure to follow the correct procedure.

FRONT AIRBAG SENSOR

RS01L-27

COMPONENTS

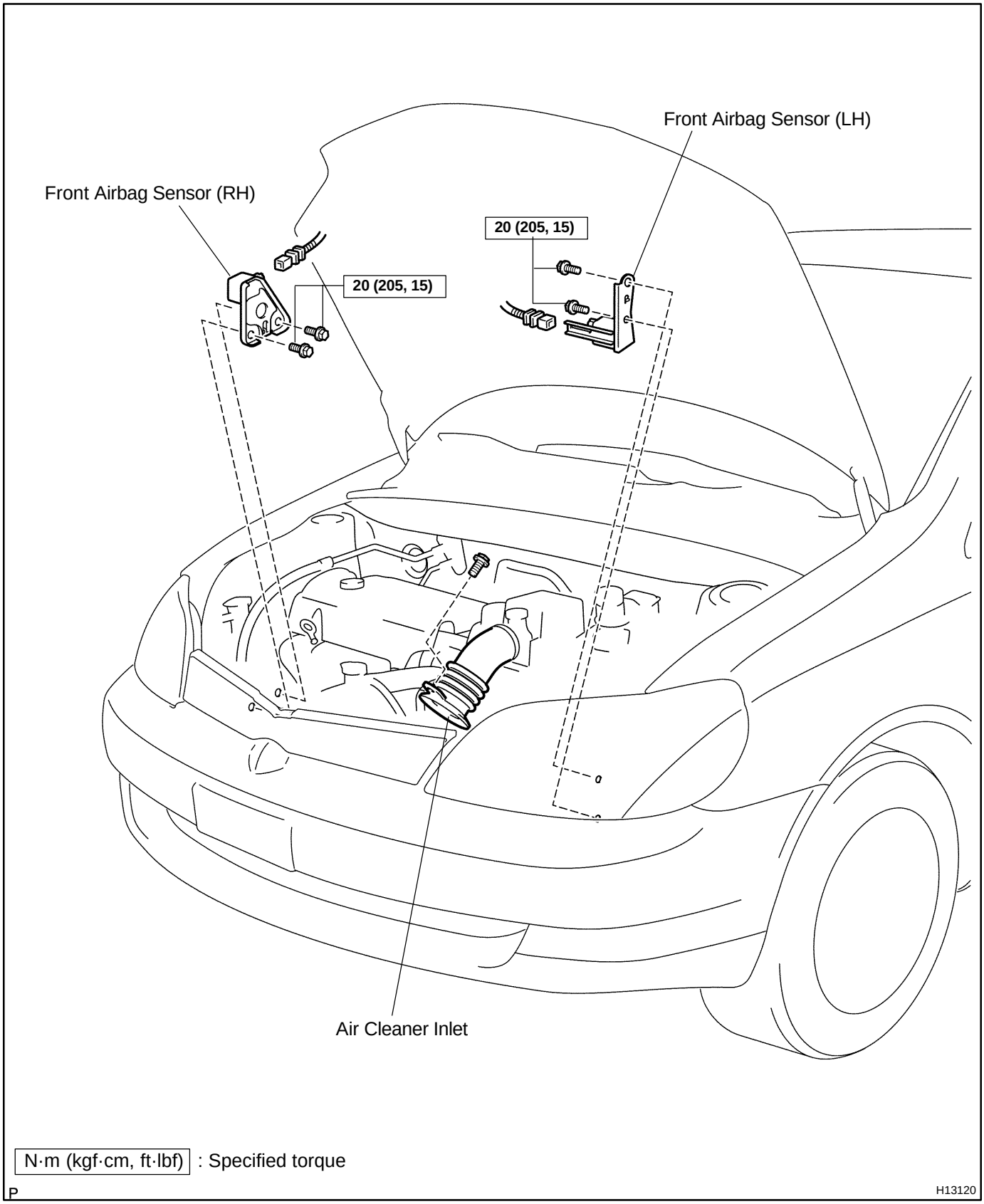

RS01N-29

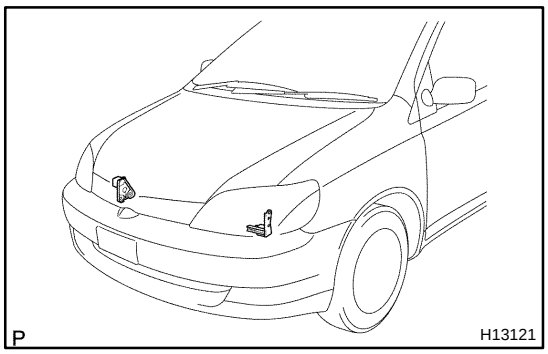

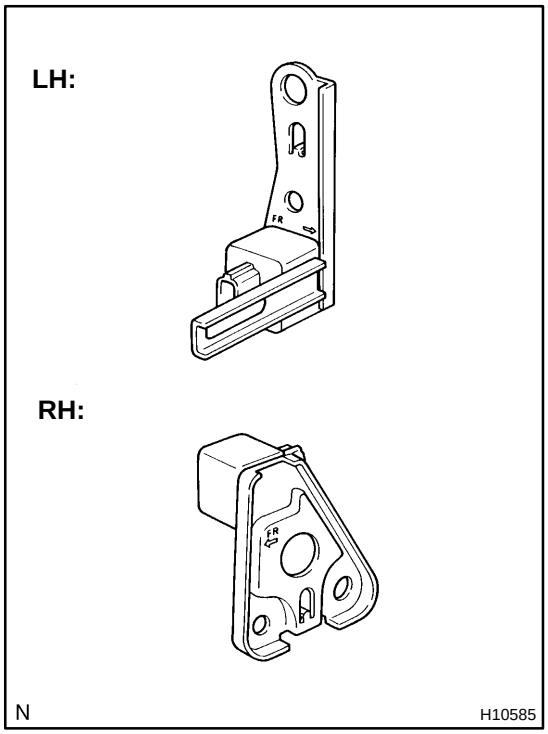

INSPECTION

1. VEHICLE NOT INVOLVED IN COLLISION

Do a diagnostic system check. (See page DI-239)

2. VEHICLE INVOLVED IN COLLISION

(a) Do a diagnostic system check. (See page DI-239)

(b) If the front fender of the car or its periphery is damaged, do a visual check for damage to the front airbag sensor, which includes the following items even if the airbag was not deployed:

- Bracket deformation
- Paint peeling off the bracket
- Cracks, dents or chips in the case
- Cracks, dents, chipping and scratches in the connector
- Peeling off of the label or damage to the serial number

RS0M1-01

INSTALLATION

NOTICE:

- **Connection of the connector is done after the sensor assembly has been installed.**
- **Make sure the sensor is installed with the specified torque.**
- **If the sensor has been dropped, or there are cracks, dents or other defects in the case, brackets or connector, replace the removed sensor with a new one.**
- **The front sensor is equipped with an electrical connection check mechanism. Be sure to lock this mechanism securely when connecting the connector. If the connector is not securely locked, a malfunction code will be detected by the diagnostic system.**

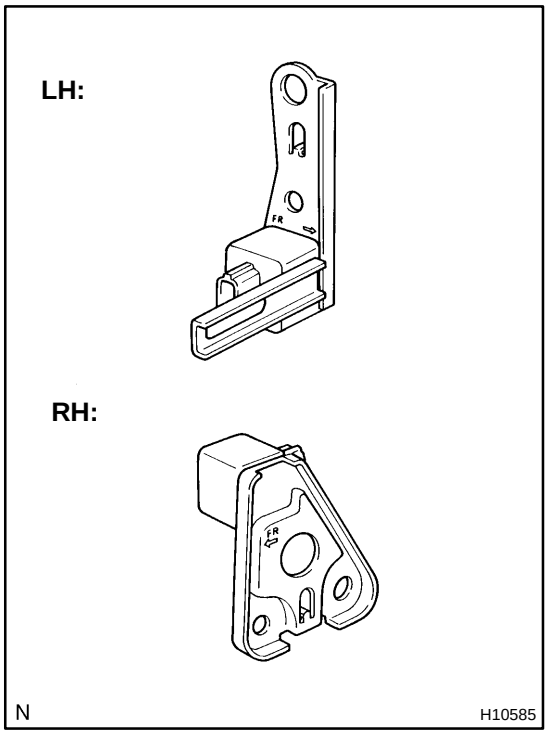

HINT:
Install the front airbag sensor with the arrow on the sensor facing toward the front of the vehicle.

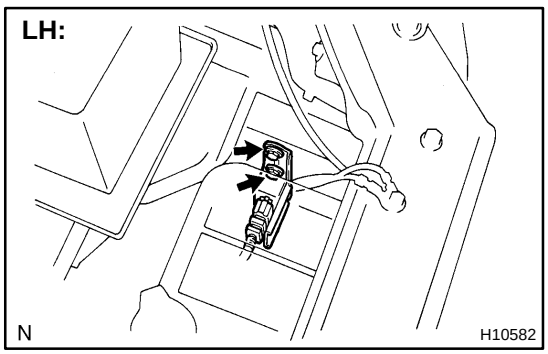

1. LH:

INSTALL FRONT AIRBAG SENSOR

(a) Install the front airbag sensor LH with the 2 bolts.
Torque: 20 N·m (205 kgf·cm, 15 ft·lbf)

(b) Connect the connector.

(c) Install the air cleaner inlet with the bolt.

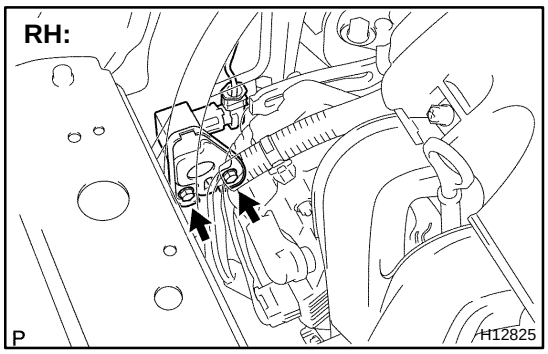

2. RH:

INSTALL FRONT AIRBAG SENSOR

(a) Install the front airbag sensor RH with the 2 bolts.
Torque: 20 N·m (205 kgf·cm, 15 ft·lbf)

(b) Connect the connector.

RS0F0-04

REMOVAL

NOTICE:

- **If the wiring connector of the SRS is disconnected with the ignition switch at ON position, DTCs will be recorded.**
- **Never use SRS parts from another vehicle. When replacing parts, replace them with new parts.**
- **Never reuse the sensor involved in a collision when the SRS has deployed.**
- **Never repair a sensor in order to reuse it.**

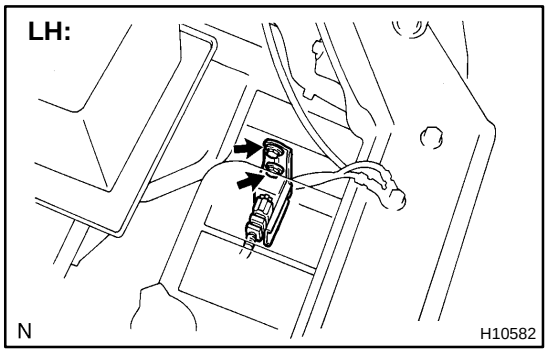

1. LH:

REMOVE FRONT AIRBAG SENSOR

(a) Remove the bolt and air cleaner inlet.

(b) Disconnect the connector.

NOTICE:

Disconnect the connector with sensor assembly installed.

(c) Remove the 2 bolts and front airbag sensor LH.

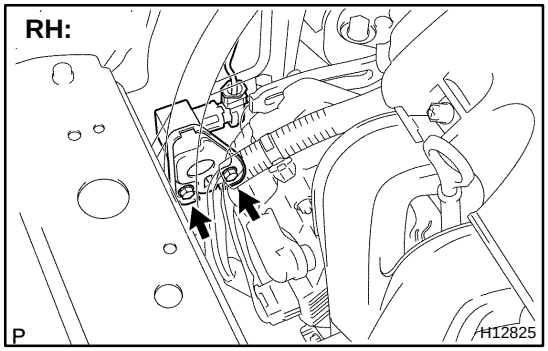

2. RH:

REMOVE FRONT AIRBAG SENSOR

(a) Disconnect the connector.

NOTICE:

Disconnect the connector with sensor assembly installed.

(b) Remove the 2 bolts and front airbag sensor RH.

RS01O-10

REPLACEMENT

REPLACEMENT REQUIREMENTS

In the following cases, replace the front airbag sensor.

- If the SRS has been deployed in a collision. (Replace both the left and right airbag sensors.)
- If the front airbag sensor has been found to be faulty in troubleshooting.
- If the front airbag sensor has been found to be faulty during checking items.
  (See page RS-58)
- If the front airbag sensor has been dropped.

CAUTION:

For removal and installation of the front airbag sensor, see page RS-57 and RS-60 . Be sure to follow the correct procedure.

FRONT PASSENGER AIRBAG ASSEMBLY

RS014-42

COMPONENTS

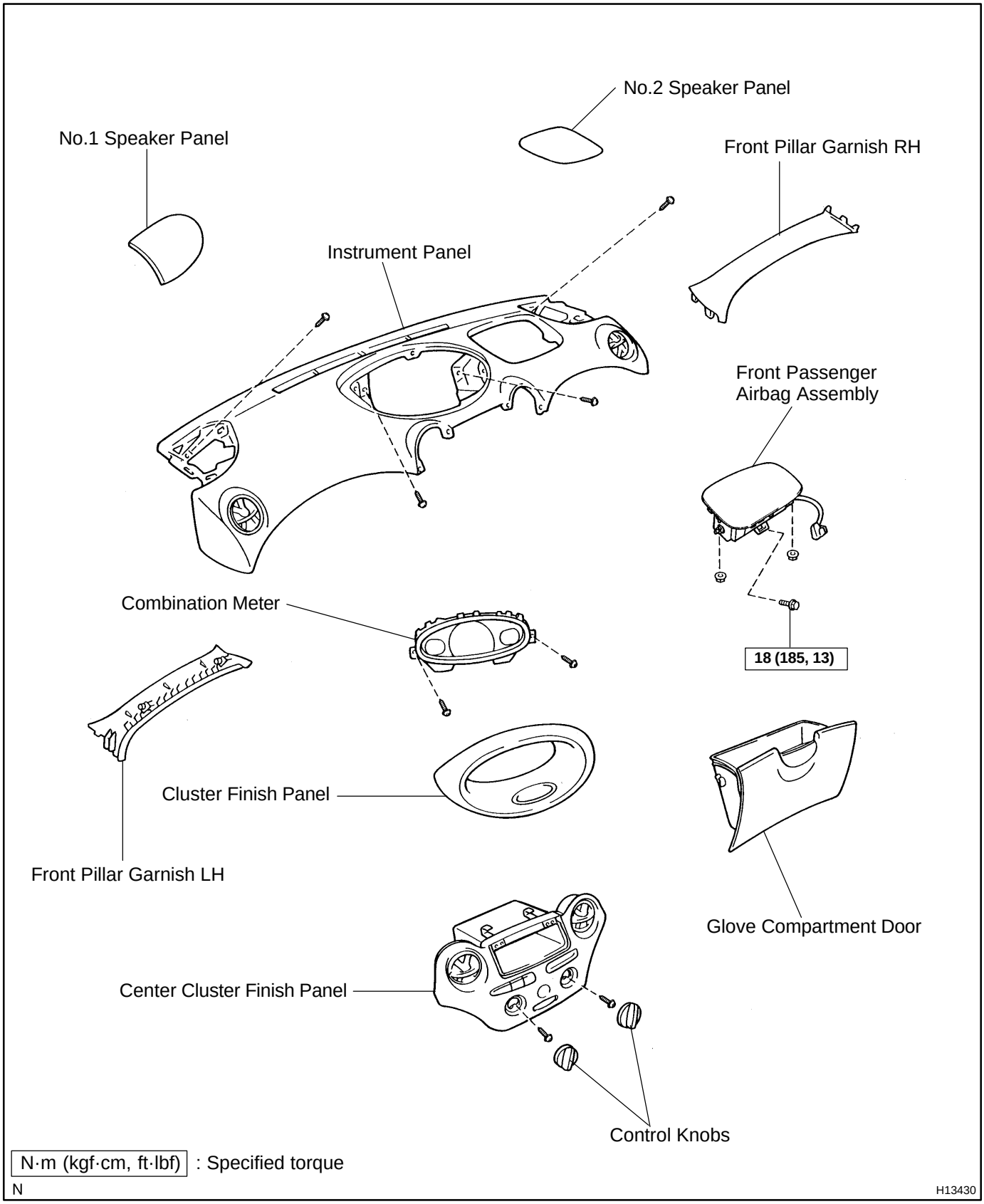

RS0H2-05

DISPOSAL

HINT:

When scrapping vehicle equipped with an SRS or disposing of a front passenger airbag assembly, always first deploy the airbag in accordance with the procedure described below. If any abnormality occurs with the airbag deployment, contact the SERVICE DEPT. of the TOYOTA MOTOR SALES, U.S.A., INC.

CAUTION:

- **Never dispose of a front passenger airbag assembly which has an undeployed airbag.**
- **The airbag produces a sizeable exploding sound when it deploys, so perform the operation out-of-doors and where it will not create a nuisance to nearby residents.**

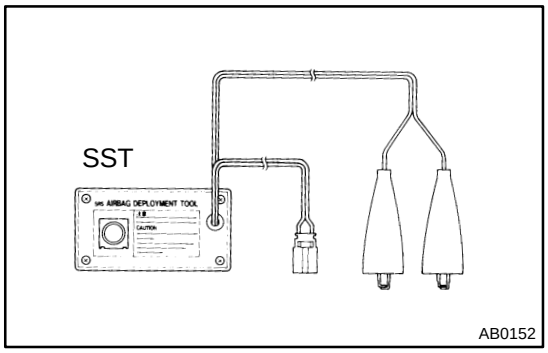

- **When deploying the airbag, always use the specified SST (SRS Airbag Deployment Tool). Perform the operation in a place away from electrical noise.**
  SST 09082-00700
- **When deploying an airbag, perform the operation at least 10 m (33 ft) away from the front passenger airbag assembly.**
- **The front passenger airbag assembly is very hot when the airbag is deployed, so leave it alone for at least 30 minutes after deployment.**
- **Use gloves and safety glasses when handling a front passenger airbag assembly with the deployed airbag.**
- **Always wash your hands with water after completing the operation.**
- **Do not apply water, etc. to a front passenger airbag assembly with the deployed airbag.**

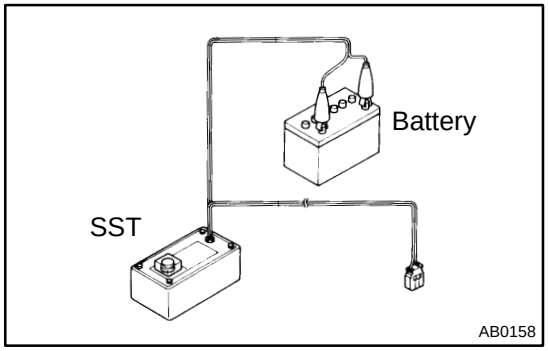

1. AIRBAG DEPLOYMENT WHEN SCRAPPING VEHICLE

HINT:

Have a battery ready as the power source to deploy the airbag.

(a) Check functioning of the SST (See step 1-(a) on page RS-17).
SST 09082-00700

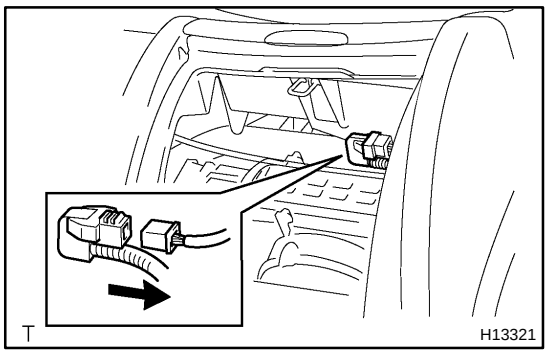

(b) Disconnect the airbag connector.
(1) Remove the glove compartment door.
(2) Disconnect the connector cover from the lower instrument panel.

NOTICE:
When handling the airbag connector, take care not to damage the airbag wire harness.

(3) Disconnect the airbag connector.

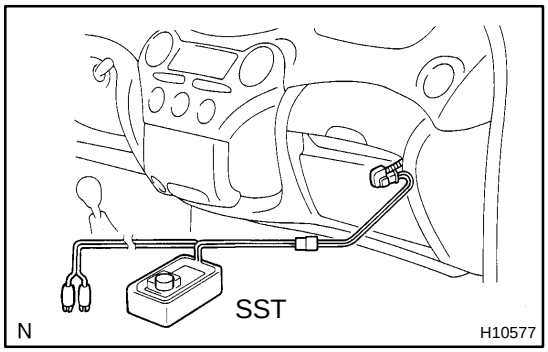

(c) Install the SST.
(1) Connect the connectors of the 2 SST to the front passenger airbag assembly connector.
SST 09082-00700, 09082-00760

NOTICE:
To avoid damaging the SST connector and wire harness, do not lock the secondary lock of the twin lock.

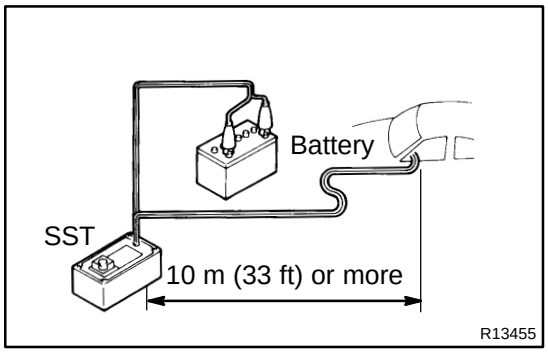

(2) Move the SST to at least 10 m (33 ft) away from the front of the vehicle.
(3) Close all the doors and windows of the vehicle.

NOTICE:
Take care not to damage the SST wire harness.

(4) Connect the red clip of the SST to the battery positive (+) terminal and the black clip to the negative (-) terminal.

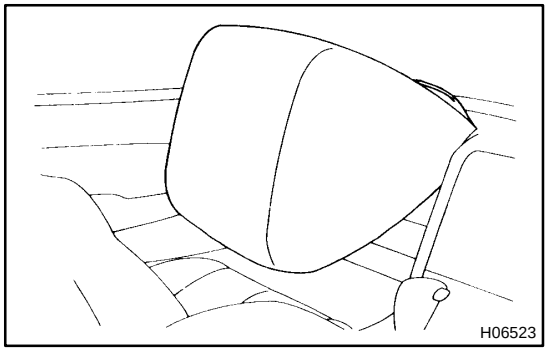

(d) Deploy the airbag.
(1) Check that no one is inside the vehicle or within 10 m (33 ft) area around the vehicle.
(2) Press the SST activation switch and deploy the airbag.

HINT:
The airbag deploys simultaneously as the LED of the SST activation switch lights up.

(e) Dispose the front passenger airbag assembly.

CAUTION:
- **The front passenger airbag assembly is very hot when the airbag is deployed, so leave it alone for at least 30 minutes after deployment.**
- **Use gloves and safety glasses when handling a front passenger airbag assembly with the deployed airbag.**
- **Always wash your hands with water after completing the operation.**
- **Do not apply water, etc. to a front passenger airbag assembly with the deployed airbag.**

- **When moving a vehicle for scrapping which has a front passenger airbag assembly with the deployed airbag, use gloves and safety glasses.**

HINT:

When scrapping a vehicle, deploy the airbag and scrap the vehicle with the front passenger airbag assembly still installed.

2. DEPLOYMENT WHEN DISPOSING OF FRONT PASSENGER AIRBAG ASSEMBLY ONLY

NOTICE:

- **When disposing of the front passenger airbag assembly only, never use the customer's vehicle to deploy the airbag.**
- **Be sure to follow the procedure given below when deploying the airbag.**

HINT:

Have a battery ready as the power source to deploy the airbag.

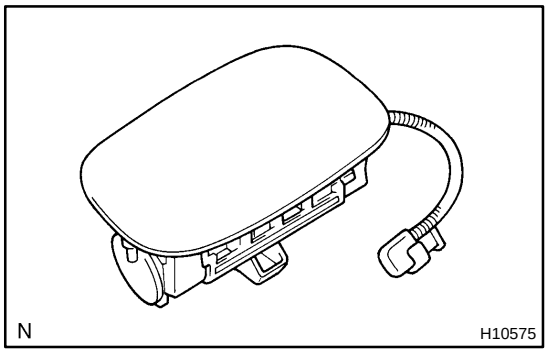

(a) Remove the front passenger airbag assembly (See page RS-28).

CAUTION:

- **When removing the front passenger airbag assembly, work must be started 90 seconds after the ignition switch is turned to the "LOCK" position and the negative (-) terminal cable is disconnected from the battery.**
- **Store the front passenger airbag assembly with the airbag deployment side facing upward.**

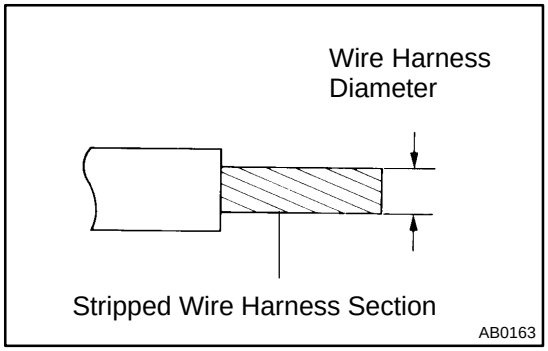

(b) Using a service-purpose wire harness for the vehicle, tie down the front passenger airbag assembly to the tire.

Wire harness: Stripped wire harness section 1.25 mm^2 or more (0.0019 $in.^2$ or more)

CAUTION:

If the front passenger airbag assembly is tied down with too thin wire harness, it may snap. This is highly dangerous. Always use a wire harness which is at least 1.25 mm^2 (0.0019 $in.^2$).

HINT:

To calculate the square of the stripped wire harness section:

Square = 3.14 X $(Diameter)^2$ divided by 4

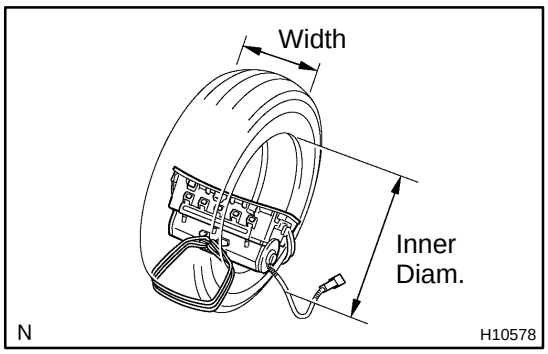

Position the front passenger airbag assembly inside the tire with the airbag deployment side facing inside.

Tire size: Must exceed the following dimensions-
Width: 185 mm (7.28 in.)
Inner diameter: 360 mm (14.17 in.)

CAUTION:

- **Make sure that the wire harness is tight. It is very dangerous if looseness in the wire harness results in the front passenger airbag assembly coming free due to the shock from the airbag deploying.**
- **Always tie down the front passenger airbag assembly with the airbag deployment side facing inside.**

NOTICE:

The tire will be marked by the airbag deployment, so use a redundant tire.

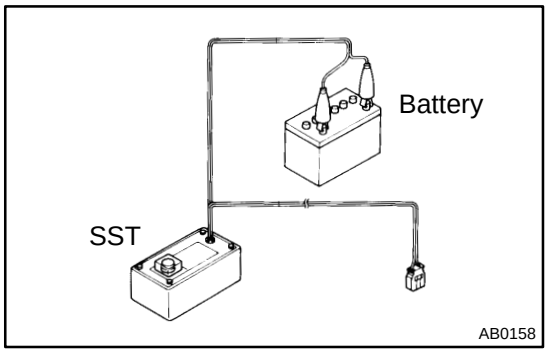

(c) Check functioning of the SST (See step 1-(a) on page RS-14).
SST 09082-00700

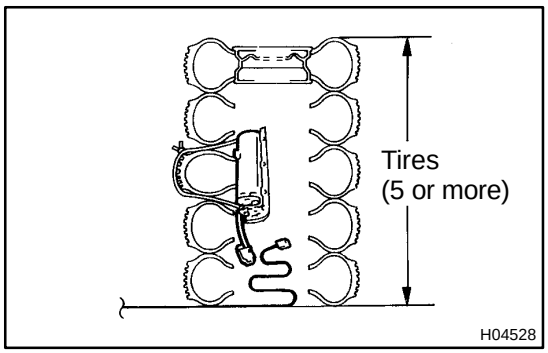

(d) Place tires.
(1) Place at least 2 tires under the tire to which the front passenger airbag assembly is tied.
(2) Place at least 2 tires over the tire to which the front passenger airbag assembly is tied. The top tire should have the wheel installed.

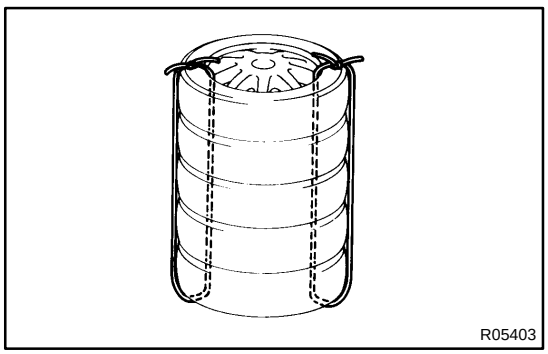

(3) Tie the tires together with 2 wire harness.

CAUTION:

Make sure that the wire harness is tight. It is very dangerous if loose wire harness result in the tires coming free due to the shock from the airbag deploying.

HINT:

Place the SST connector and wire harness inside tires. Secure at least 1 m (3 ft) of slack for the wire harness.

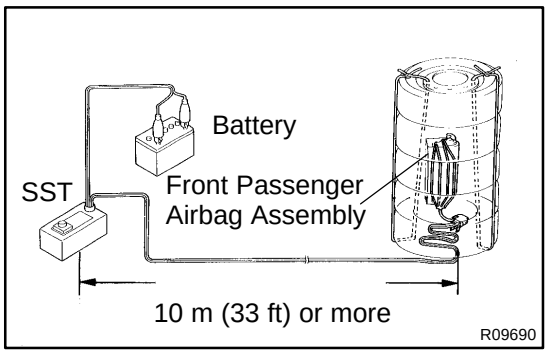

(e) Install the SST.
Connect the connectors of the 2 SST to the front passenger airbag assembly connector.
SST 09082-00700, 09082-00760

NOTICE:
To avoid damaging the SST connector and wire harness, do not lock the secondary lock of the twin lock.

(f) Deploy the airbag.
(1) Connect the SST red clip to the battery positive (+) terminal and the black clip to the battery negative (-) terminal.
(2) Check that no one is within 10 m (33 ft) area around the tire which the front passenger airbag assembly is tied to.
(3) Press the SST activation switch and deploy the airbag.

HINT:
The airbag deploys simultaneously as the LED of the SST activation switch lights up.

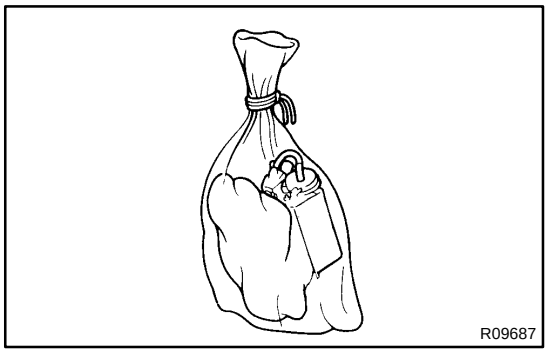

(g) Dispose the front passenger airbag assembly.

CAUTION:
- **The front passenger airbag assembly is very hot when the airbag is deployed, so leave it alone for at least 30 minutes after deployment.**
- **Use gloves and safety glasses when handling a front passenger airbag assembly with the deployed airbag.**
- **Always wash your hands with water after completing the operation.**
- **Do not apply water, etc. to a front passenger airbag assembly with the deployed airbag.**

(1) Remove the front passenger airbag assembly from the tire.
(2) Place the front passenger airbag assembly in a vinyl bag, tie the end tightly and dispose of it in the same way as other general parts.

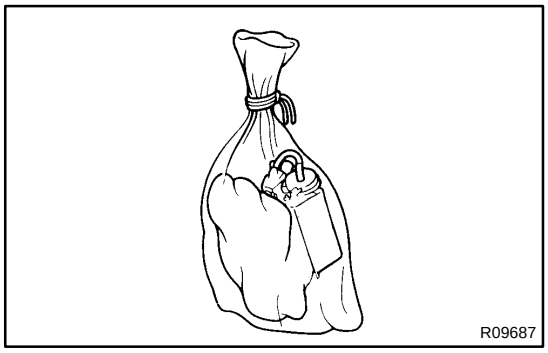

3. DEPLOYMENT WHEN DISPOSING OF STEERING WHEEL PAD WITH AND AIRBAG DEPLOYED IN COLLISION

Dispose the front passenger airbag assembly.

CAUTION:
- **The front passenger airbag assembly is very hot when the airbag is deployed, so leave it alone for at least 30 minutes after deployment.**

- **When moving a vehicle for scrapping which has a front passenger airbag assembly with the deployed airbag, use gloves and safety glasses.**
- **Use gloves and safety glasses when handling a front passenger airbag assembly with the deployed airbag.**
- **Always wash your hands with water after completing the operation.**
- **Do not apply water, etc. to a front passenger airbag assembly with the deployed airbag.**
  (1) Remove the front passenger airbag assembly from the vehicle.
  (2) Place the front passenger airbag assembly in a vinyl bag, tie the end tightly and dispose of it in the same way as other general parts.

RS02Q-16

INSPECTION

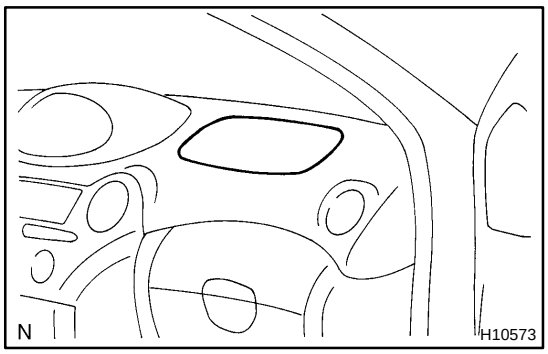

1. VEHICLE NOT INVOLVED IN COLLISION

(a) Do a diagnostic system check. (See page DI-239)

(b) Do a visual check which includes the following item with the front passenger airbag assembly installed in the vehicle.

Check cuts, minute cracks or marked discoloration on the front passenger airbag assembly and instrument panel.

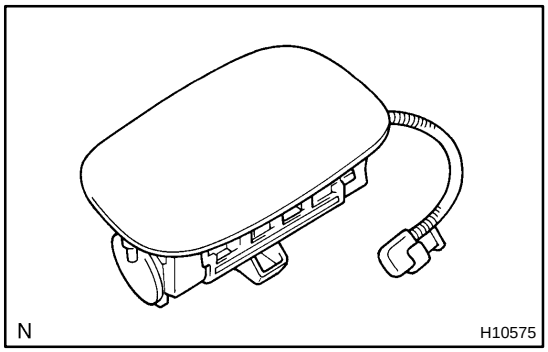

2. VEHICLE INVOLVED IN COLLISION AND AIRBAG IS NOT DEPLOYED

(a) Do a diagnostic system check. (See page DI-239)

(b) Do a visual check which includes the following items with the front passenger airbag assembly removed from the vehicle.

- Check cuts, minute cracks or marked discoloration on the front passenger airbag assembly.
- Check cuts and cracks in wire harness, and for chipping in connectors.
- Check the deformation or cracks on the instrument panel and instrument panel reinforcement.

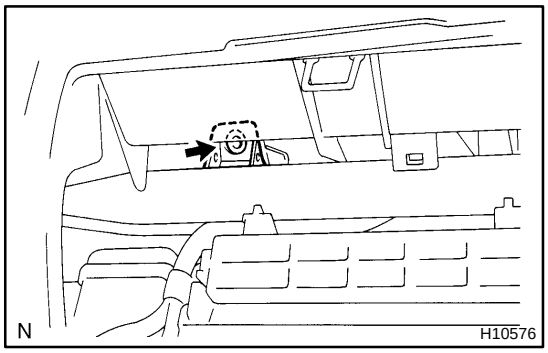

HINT:

- If the instrument panel or instrument panel reinforcement is deformed or cracked, never repair it. Always replace it with a new one.

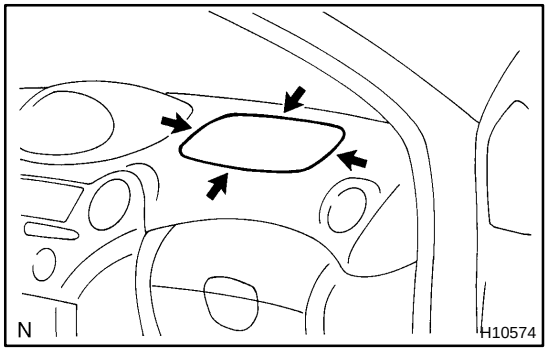

- There should be no interference between the instrument panel and the front passenger airbag assembly.

CAUTION:

For removal and installation of the front passenger airbag assembly, see page RS-28 and RS-37 , and be sure to follow the correct procedure.

3. VEHICLE INVOLVED IN COLLISION AND AIRBAG IS DEPLOYED

(a) Do a diagnostic system check. (See page DI-239)

(b) Do a visual check which includes the following items with the front passenger airbag assembly removed from the vehicle.

- Check the deformation or cracks on the instrument panel and instrument panel reinforcement.
- Check the damage on the connector and wire harness.

HINT:

If the instrument panel or instrument panel reinforcement is deformed or cracked, never repair it. Always replace it with a new one.

RS0H3-05

INSTALLATION

NOTICE:

Never use airbag parts from another vehicle. When replacing parts, replace them with new parts.

HINT:

For step 2 to 7, refer to page BO-84 .

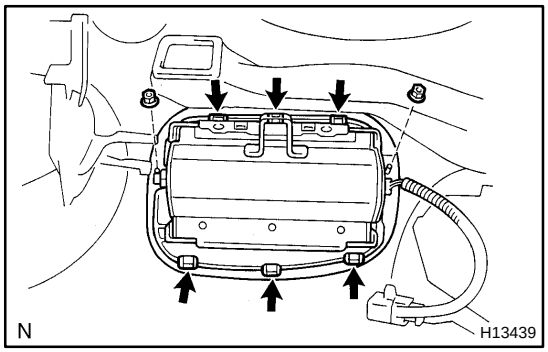

1. INSTALL FRONT PASSENGER AIRBAG ASSEMBLY

(a) Install the front passenger airbag assembly to the instrument panel.

(b) Install the 2 nuts.

NOTICE:

If the front passenger airbag assembly has been dropped, or there are cracks, dents or other defects in the case or connector, replace the front passenger airbag assembly with a new one.

2. INSTALL INSTRUMENT PANEL

3. INSTALL CLUSTER FINISH PANEL

4. INSTALL NO. 1 AND NO. 2 SPEAKER PANEL

5. INSTALL FRONT PILLER GARNISHES

6. INSTALL COMBINATION METER

7. INSTALL CLUSTER FINISH PANEL

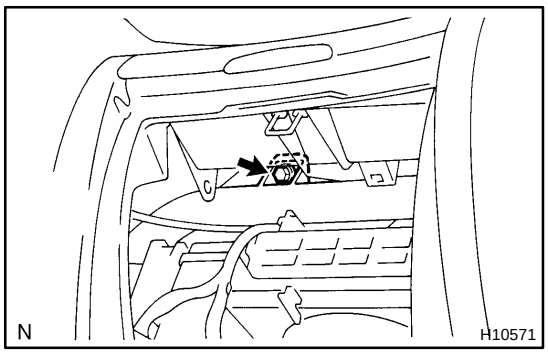

8. FIX FRONT PASSENGER AIRBAG ASSEMBLY

Install the bolt to the instrument panel reinforcement.

Torque: 18 N·m (185 kgf·cm, 13 ft·lbf)

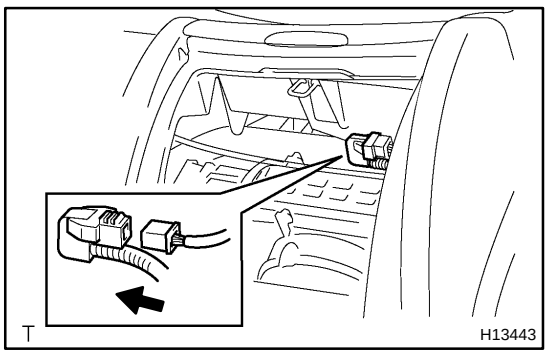

9. CONNECT AIRBAG CONNECTOR

(a) Connect the connector of the front passenger airbag assembly.

(b) Install the connector cover to the lower instrument panel.

(c) Install the glove compartment door.

RS0ID-04

REMOVAL

NOTICE:

- **If the wiring connector of the SRS is disconnected and the ignition switch is in ON position, DTCs will be recorded.**
- **Never use the airbag parts from another vehicle. When replacing parts, replace them with new parts.**

HINT:

For step 2 to 7, refer to page BO-76 .

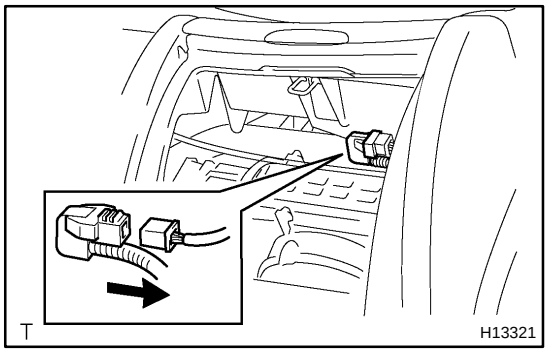

1. DISCONNECT AIRBAG CONNECTOR

(a) Remove the glove compartment door.

(b) Remove the connector cover from the lower instrument panel.

NOTICE:

When handling the airbag connector, take care not to damage the airbag wire harness.

(c) Disconnect the front passenger airbag connector.

2. REMOVE CLUSTER FINISH PANEL

3. REMOVE COMBINATION METER

4. REMOVE FRONT PILLER GARNISHES

5. REMOVE NO. 1 AND NO. 2 SPEAKER PANEL

6. REMOVE CENTER CLUSTER FINISH PANEL

7. REMOVE INSTRUMENT PANEL

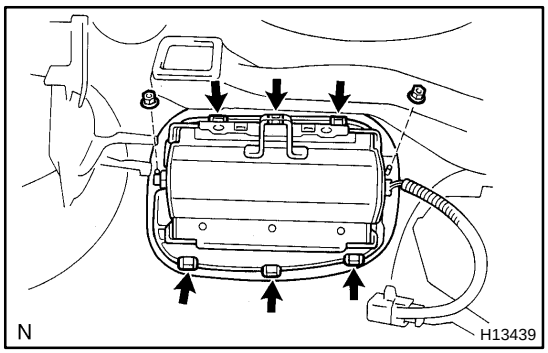

8. REMOVE FRONT PASSENGER AIRBAG ASSEMBLY

(a) Remove the 2 nuts and pry up the 6 clips.

(b) Remove the front passenger airbag assembly.

CAUTION:

- **Do not store the front passenger airbag assembly with the airbag deployment side facing downward.**
- **Never disassemble the front passenger airbag assembly.**

RS018-22

REPLACEMENT

REPLACEMENT REQUIREMENTS

In the following cases, replace the front passenger airbag assembly, instrument panel or instrument panel reinforcement.

Case	Replacing part
If the airbag has been deployed.	Front passenger airbag assembly
If the front passenger airbag assembly has been found to be faulty in trouble-shooting.	Front passenger airbag assembly
If the front passenger airbag assembly has been found to be faulty during checking items. (See page RS-29)	Front passenger airbag assembly
If the instrument panel has been found to be faulty during checking items. (See page RS-29)	Instrument panel
If the instrument panel reinforcement has been found to be faulty during checking items. (See page RS-29)	Instrument panel reinforcement
If the front passenger airbag assembly has been dropped.	Front passenger airbag assembly

CAUTION:

For replacement of the front passenger airbag assembly, see page RS-28 and RS-37 . Be sure to follow the correct procedure.

SIDE AIRBAG ASSEMBLY

RS0M2-02

COMPONENTS

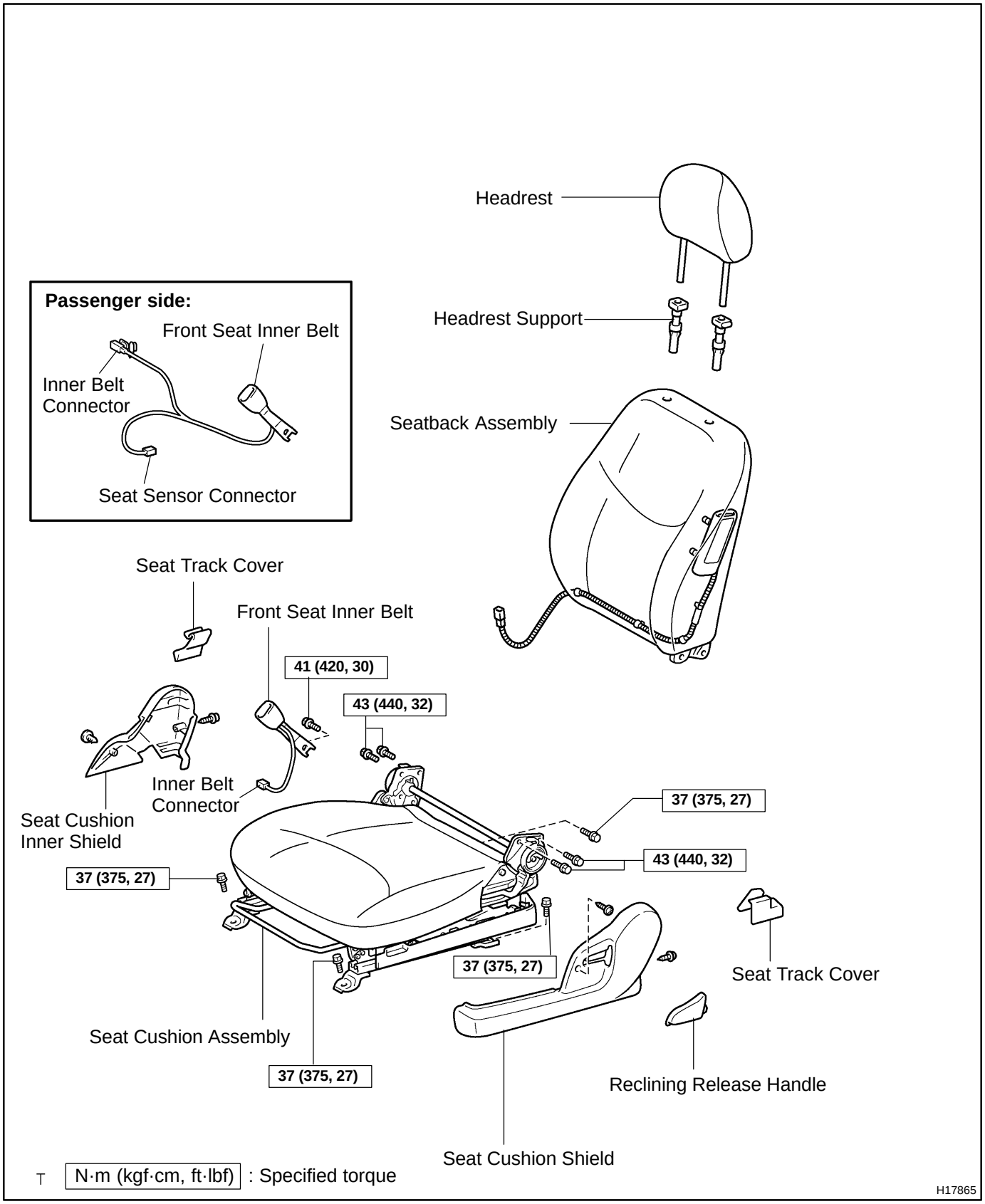

RS0M5-02

DISPOSAL

HINT:

When scrapping vehicles equipped with an SRS or disposing of the side airbag assembly always first deploy the airbag in accordance with the procedure described below. If any abnormality occurs with the airbag deployment, contact the SERVICE DEPT. of the SERVICE DEPT.of DISTRIBUTOR.

CAUTION:

- **Never dispose of a side airbag assembly which has an undeployed airbag.**
- **The airbag produces a sizeable exploding sound when it deploys, so perform the operation out of doors and where it will not create a nuisance to nearby residents.**

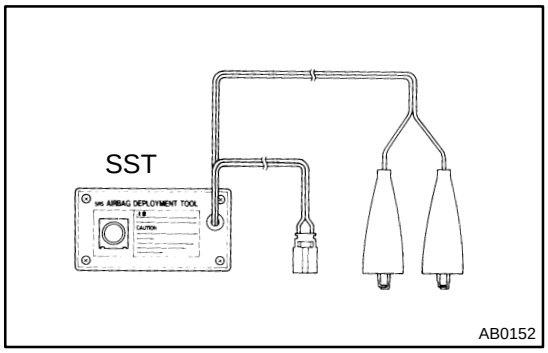

- **When deploying the airbag, always use the specified SST (SRS Airbag Deployment Tool), perform the operation in a place away from electrical noise.**
  SST 09082-00700
- **When deploying an airbag, perform the operation at least 10 m (33 ft) away from the airbag assembly.**
- **The side airbag assembly is very hot when the airbag is deployed, so leave it alone for at least 30 minutes after deployment.**
- **Use gloves and safety glasses when handling side airbag assembly with the deployed airbag.**
- **Always wash your hands with water after completing the operation.**
- **Do not apply water, etc. to a side airbag assembly with the deployed airbag.**

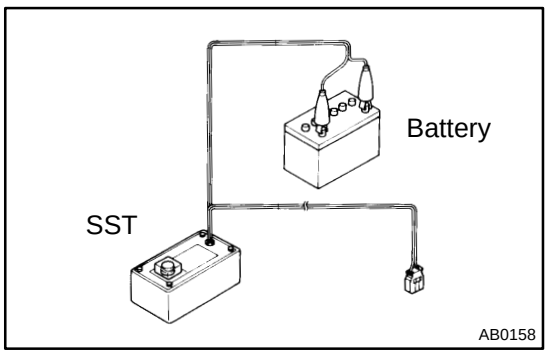

1. AIRBAG DEPLOYMENT WHEN SCRAPPING VEHICLE

HINT:

Have a battery ready as the power source to deploy the airbag.

(a) Check functioning of the SST (See step 1-(a) on page RS-17).
SST 09082-00700

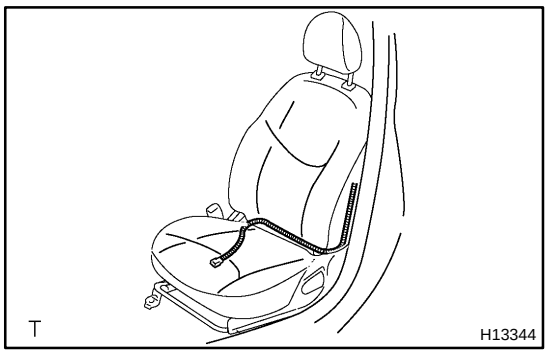

(b) Disconnect the side airbag connector.

NOTICE:

When handling the airbag connector, take care not to damage the airbag wire harness.

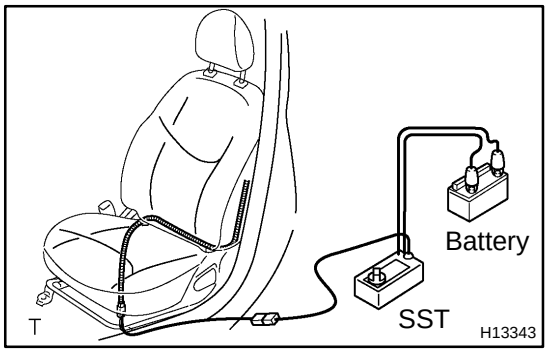

(c) Install the SST.

(1) Connect the connector of 2 SST to the airbag connector.

SST 09082-00700, 09082-00750

NOTICE:

To avoid damaging the SST connector and wire harness, do not lock the secondary lock of the twin lock.

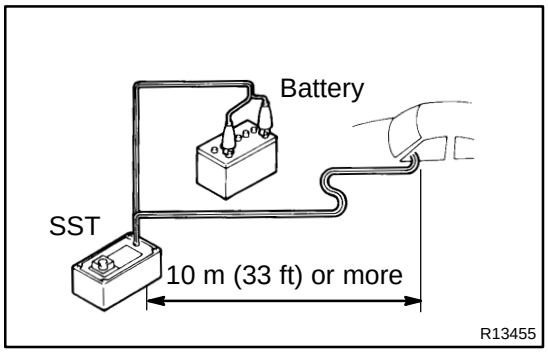

(2) Move the SST at least 10 m (33 ft) away from the front of the vehicle.

(3) Close all the doors and windows of the vehicle.

NOTICE:

Take care not to damage the SST wire harness.

(4) Connect the SST red clip to the battery positive (+) terminal and the black clip to the battery negative (-) terminal.

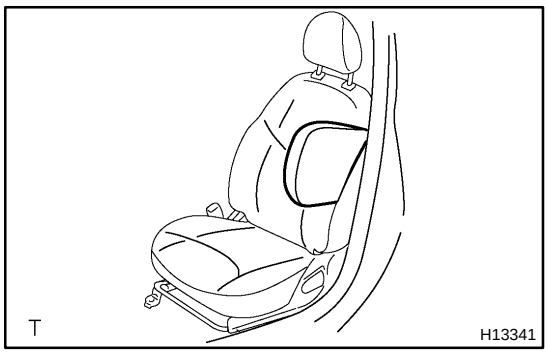

(d) Deploy the airbag.

(1) Check that no one is inside the vehicle or within 10 m (33 ft) area around the vehicle.

(2) Press the SST activation switch and deploy the airbag.

HINT:

The airbag deploys simultaneously as the LED of SST activation switch lights up.

(e) Dispose of side airbag assembly.

CAUTION:

- **The side airbag assembly is very hot when the airbag is deployed, so leave it alone for at least 30 minutes after deployment.**
- **Use gloves and safety glasses when handling a side airbag assembly with the deployed airbag.**
- **Do not apply water, etc. to a side airbag assembly with the deployed airbag.**

- **Always wash your hands with water after completing the operation.**

When scrapping a vehicle, deploy the airbag and scrap the vehicle with the side airbag assembly still installed.

2. DEPLOYMENT WHEN DISPOSING OF SIDE AIRBAG ASSEMBLY

NOTICE:

- **When disposing of the side airbag assembly only, never use the customer's vehicle to deploy the airbag.**
- **Be sure to follow the procedure given below when deploying the airbag.**

HINT:

Have a battery ready as the power source to deploy the airbag.

(a) Remove the seatback assembly. (See page RS-39)

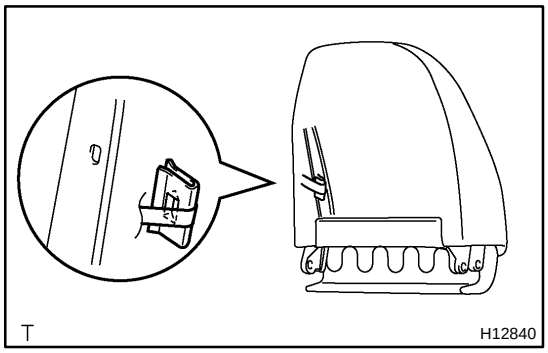

(b) Remove the side airbag assembly from the seatback assembly.

CAUTION:

Store the side airbag assembly with the airbag deployment side facing upward.

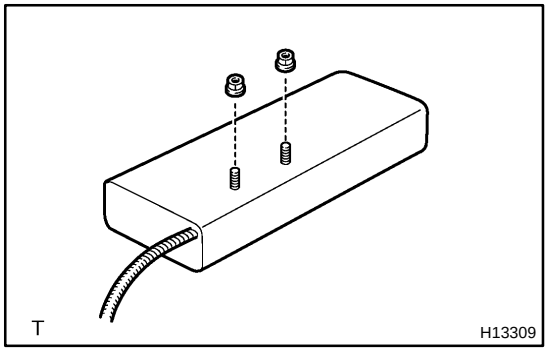

(c) Fix the side airbag assembly.

(1) Install the 2 nuts to the side airbag assembly.

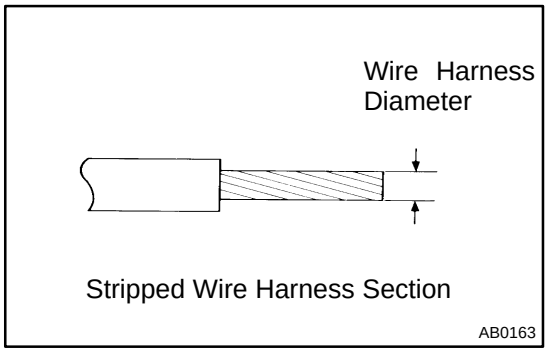

(2) Using a service-purpose wire harness tie down the side airbag assembly.

Wire harness: Stripped wire harness section 1.25 mm^2 or more (0.0019 in^2 or more)

HINT:

To calculate the square of the stripped wire harness section-Square = 3.14 x $(Diameter)^2$ divided by 4

CAUTION:
If a wire harness which is too thin or some other thing is used to tie down the side airbag assembly, it may be snapped by the shock when the airbag is deployed. This is highly dangerous. Always use a wire harness for vehicle use which is at least 1.25 mm^2 (0.0019 in^2).

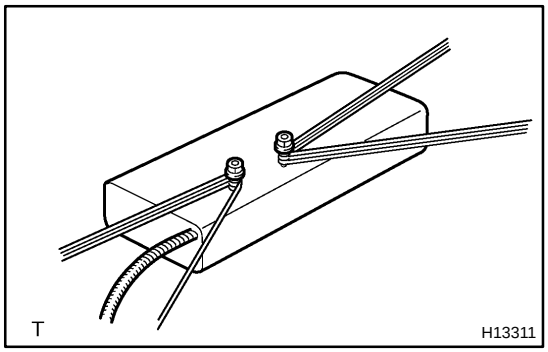

(3) Wind the wire harness around the stud bolts of the side airbag assembly as shown in the illustration.

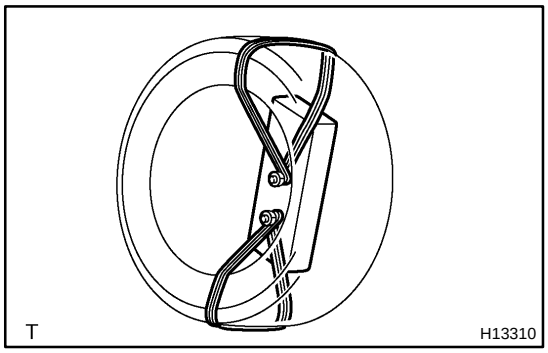

(4) Position the side airbag assembly inside the tire with the airbag deployment direction facing inside.

Tire size : Must exceed the following dimensions:-
Width 185 mm (7.28 in.)
Inner diameter 360 mm (14.17 in.)

CAUTION:

- **Make sure the wire harness is tight. It is very dangerous when a loose wire harness results in the side airbag assembly coming free due to the shock from the airbag deploying.**
- **Always tie down the side airbag assembly with the airbag door facing inside.**

NOTICE:
The tire will be marked by the airbag deployment, so when disposing of the airbag use a redundant tire.

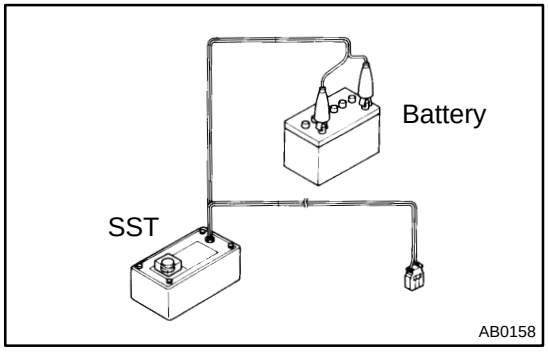

(d) Check functioning of the SST.
SST 09082-00700

(e) Install the SST.
Connect the connector of 2 SST to the side airbag assembly connector.
SST 09082-00700, 09082-00750

NOTICE:
To avoid damaging the SST connector and wire harness, do not lock the secondary lock of the twin lock.

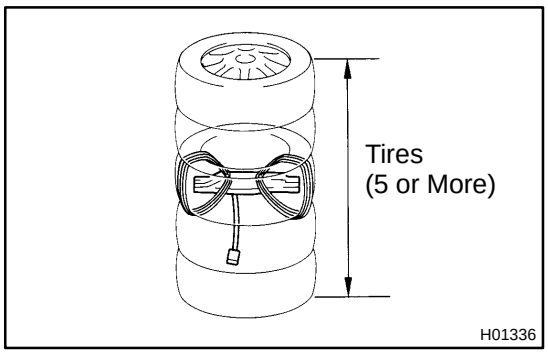

(f) Place the tires.
(1) Place at least 2 tires under the tire to which the side airbag assembly is tied.
(2) Place at least 2 tires over the tire to which the side airbag assembly is tied. The top tire should have the wheel installed.

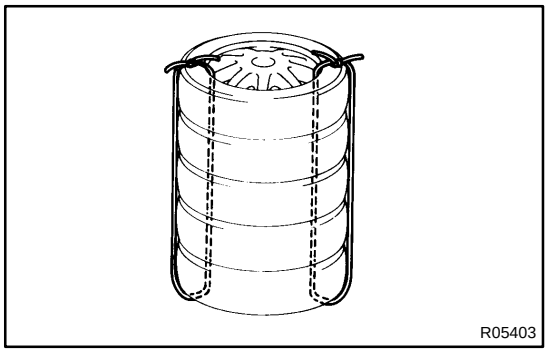

(3) Tie the tires together with 2 wire harness.

CAUTION:

Make sure that the wire harness are tight. It is very dangerous when loose wire harness results in the tires coming free due to the shock from the airbag deploying.

HINT:

Place the SST connector and wire harness inside tires. Secure at least 1 m (3 ft) of slack for the wire harness.

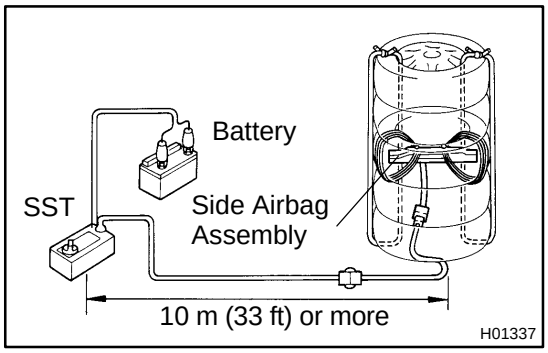

(g) Deploy the airbag.
(1) Connect the SST red clip to the battery positive (+) terminal and the black clip to the battery negative (-) terminal.
(2) Check that no one is within 10 m (33 ft) area around the tire which the side airbag assembly is tied to.
(3) Press the SST activation switch and deploy the airbag.

HINT:

The airbag deploys simultaneously as the LED of the SST activation switch lights up.

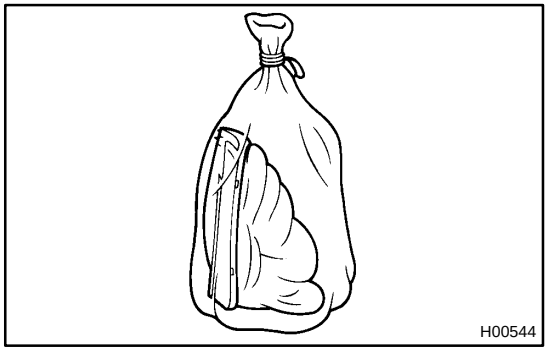

(h) Dispose of the side airbag assembly.

CAUTION:

- **The side airbag assembly is very hot when the airbag is deployed, so leave it alone for at least 30 minutes after deployment.**
- **Use gloves and safety glasses when handling a side airbag assembly with the deployed airbag.**
- **Do not apply water etc. to a side airbag assembly with the deployed airbag.**

- **Always wash your hands with water after completing the operation.**
  (1) Remove the side airbag assembly from the tire.
  (2) Place the side airbag assembly in a vinyl bag, tie the end tightly and dispose of it in the same way as other general parts disposal.

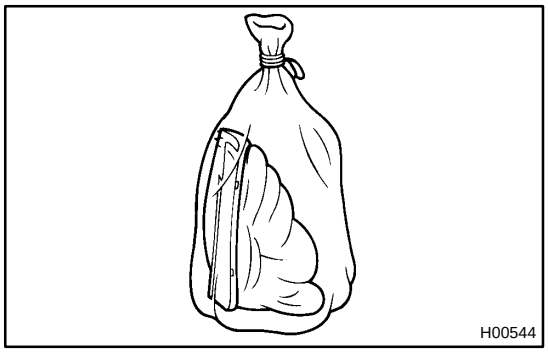

3. DEPLOYMENT WHEN DISPOSING OF SIDE AIRBAG ASSEMBLY WITH AIRBAG DEPLOYED IN COLLISION

Dispose of the side airbag assembly.

CAUTION:

- **The side airbag assembly is very hot when the airbag is deployed, so leave it alone for at least 30 minutes after deployment.**
- **Use gloves and safety glasses when handling a side airbag assembly with the deployed airbag.**
- **Do not apply water etc. to a side airbag assembly with the deployed airbag.**
- **Always wash your hands with water after completing the operation.**
  (1) Remove the side airbag assembly from the vehicle.
  (2) Place the side airbag assembly in a vinyl bag, tie the end tightly and dispose of it in the same way as other general parts disposal.

RS0M4-02

INSPECTION

1. VEHICLES NOT INVOLVED IN COLLISION

(a) Do a diagnostic system check. (See page DI-239)

(b) Do a visual check which includes the following items with the seatback assembly installed in the vehicle.

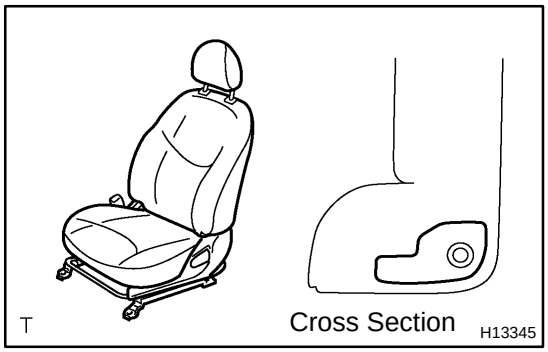

Check that there are no cuts or frayed in seams and outside of seatback cover.

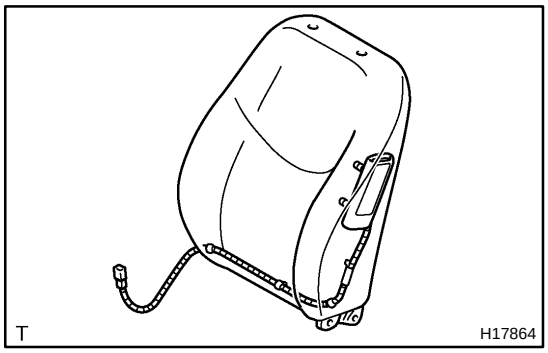

2. VEHICLE INVOLVED IN A COLLISION AND AIRBAG IS NOT DEPLOYED

(a) Do a diagnostic system check. (See page DI-239)

(b) Do a visual check which includes the following items with the seatback assembly removed from the vehicle.

- Check cuts and cracks of the side airbag assembly.
- Check cuts and cracks in wire harnesses, and chipping in connectors.

CAUTION:

For removal and installation of the seatback assembly, see page RS-39 and RS-49 . Be sure to follow the correct procedure.

3. VEHICLE INVOLVED IN A COLLISION AND AIRBAG IS DEPLOYED

(a) Do a diagnostic system check. (See page DI-239)

(b) Do a visual check which includes the following items with the seatback assembly removed from the vehicle.

- Check the seatback installation part of the seat adjuster.
- Check the damage to the connector and wire harness.

HINT:

If the seat adjuster is deformed, never repair it. Always replace it with new one.

RS0SS-01

INSTALLATION

1. INSTALL HEADREST SUPPORTS TO SEATBACK ASSEMBLY

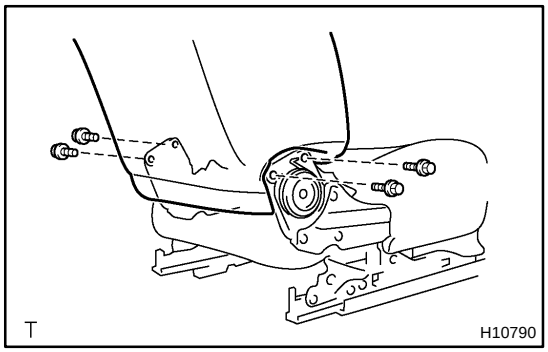

2. INSTALL SEATBACK ASSEMBLY

(a) Install the seatback assembly with the 4 bolts.
Torque: 43 N·m (440 kgf·cm, 32 ft·lbf)

(b) Install new hog rings on the lower part of seatback assembly.

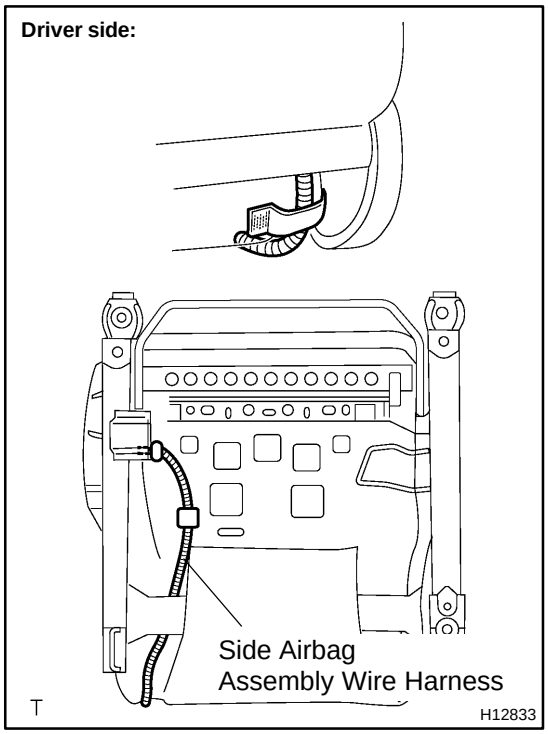

(c) Driver side:
Connect and clump the connecter and wire harness.

NOTICE:
Be careful not to damage the connector and wire harness.

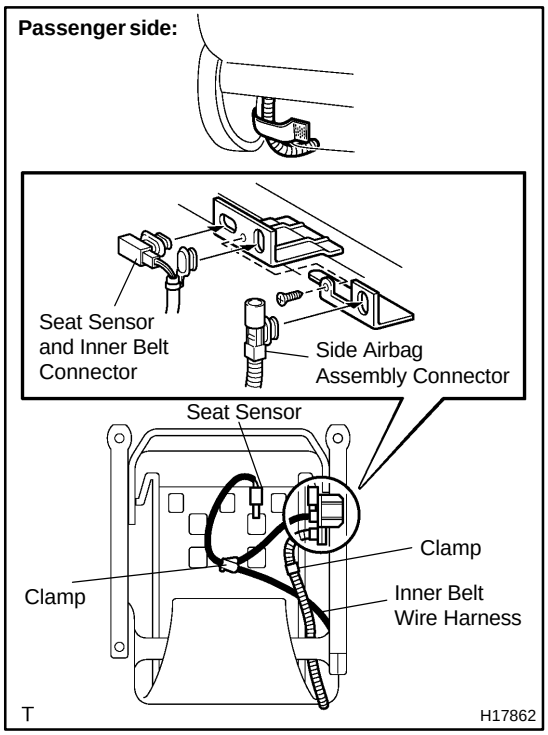

(d) Passenger side:
Connect and clump the connector and wire harness.

NOTICE:

Be careful not to damage the connector and wire harness.

3. INSTALL SEAT CUSHION INNER SHIELD

Install the seat cushion inner shield with the screw and clip.

4. INSTALL FRONT SEAT INNER BELT

(a) Install the front seat inner belt wire the bolt.
Torque: 41 N·m (420 kgf·cm, 30 ft·lbf)

(b) Driver side:
Connect the inner belt connector.

(c) Passenger side:
Connect the inner belt connector and seat sensor connector.

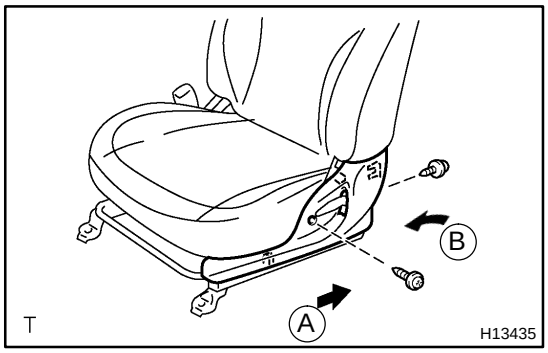

5. INSTALL SEAT CUSHION SHIELD

Install the seat cushion shield with the 2 screws.

HINT:

Install the seat cushion shield in order A, B as shown in the illustration.

6. INSTALL RECLINING RELEASE HANDLE

7. INSTALL HEADREST

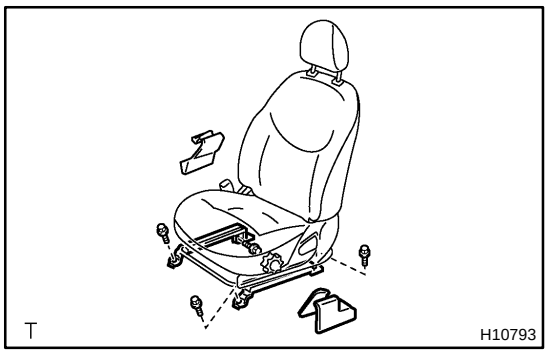

8. INSTALL FRONT SEAT

(a) Slide the front seat to the most front position.

NOTICE:

Make sure that seat adjuster locks.

(b) Without holding the seat track handle, mount the seat to the vehicle.

HINT:

If holding the seat track handle, the adjusted most front positions slip off.

(c) Connect the connectors.

(d) Tighten the bolts on the rear side temporarily, from the bolt on the inner side tighten them completely.
Torque: 37 N·m (375 kgf·cm, 27 ft·lbf)

(e) Slide the seat to the most rear position to install the bolts on the front side.
Torque: 37 N·m (375 kgf·cm, 27 ft·lbf)

(f) Install the seat track covers.

RS0SR-01

REMOVAL

NOTICE:

- **If the wiring connector of the SRS is disconnected and the ignition switch is in ON or ACC position, DTCs will be recorded.**
- **Never use the airbag parts from another vehicle. When replacing parts, replace them with new parts.**

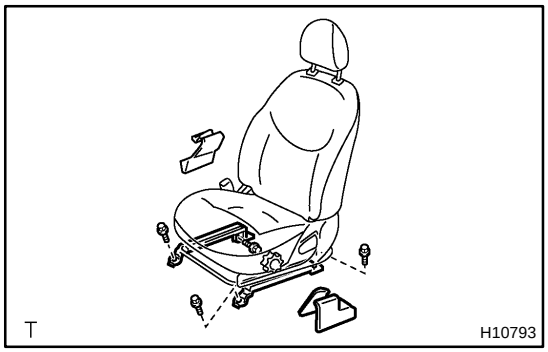

1. REMOVE FRONT SEAT

(a) Using a screwdriver, remove the seat track covers.

HINT:

Tape the screwdriver tip before use.

(b) Remove the 4 bolts.

(c) Disconnect the connectors.

(d) Remove the front seat.

NOTICE:

Be careful not to damage the body.

2. REMOVE HEADREST

3. REMOVE RECLINING RELEASE HANDLE

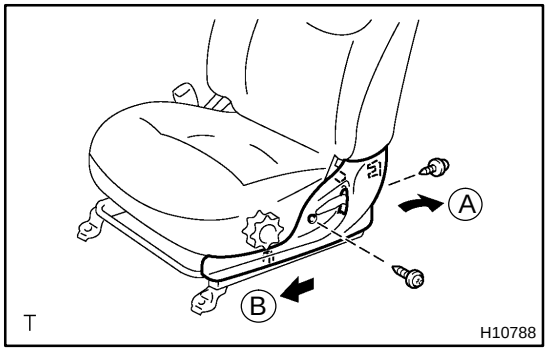

4. REMOVE SEAT CUSHION SHIELD

Remove the 2 screws and seat cushion shield as shown in the illustration.

HINT:

Remove the seat cushion shield in order A, B as shown in the illustration.

5. REMOVE FRONT SEAT INNER BELT

(a) Remove the bolt and front seat inner belt.

(b) Driver side:
Disconnect the inner belt connector.

(c) Passenger side:
Disconnect the inner belt connector and seat sensor connector.

6. REMOVE SEAT CUSHION INNER SHIELD

Remove the clip, screw and seat cushion inner shield.

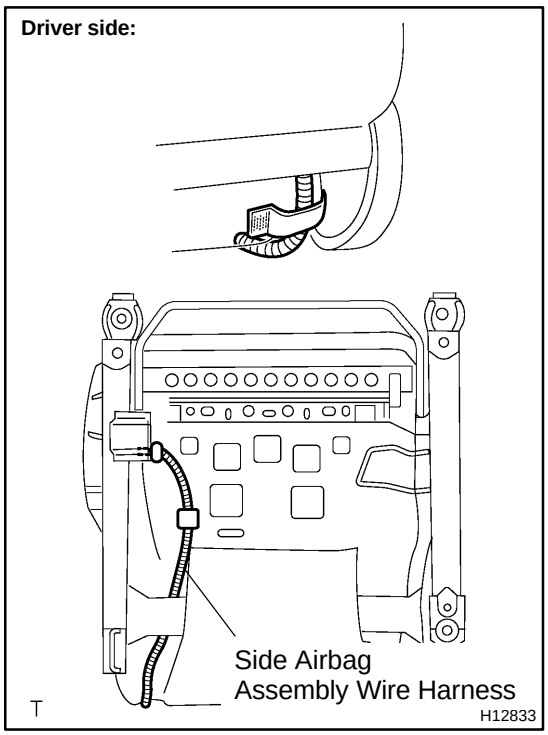

7. REMOVE SEATBACK ASSEMBLY

(a) Disconnect and disengase the connector and wire harness.

NOTICE:

Be careful not to damage the connector and wire harness.

(b) Remove the hog rings on the lower part of seatback assembly.

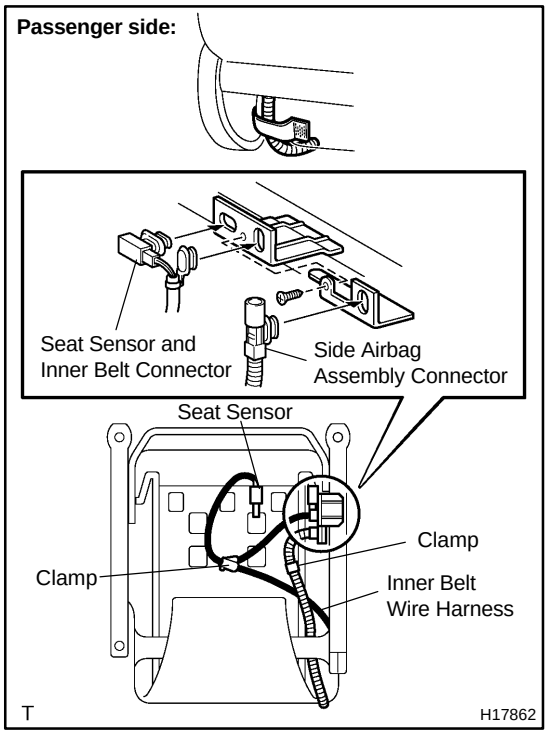

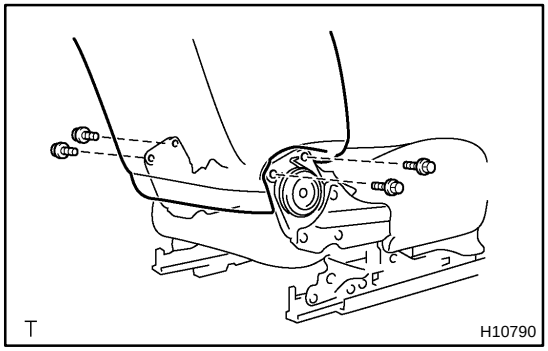

(c) Remove the 4 bolts and seatback assembly.

8. REMOVE HEADREST SUPPORTS

RS0M6-01

REPLACEMENT

REPLACEMENT REQUIREMENTS

In the following cases, replace the seatback assembly or seat cover.

- If the side airbag assembly has been deployed.
- If the side airbag assembly has been found to be faulty in troubleshooting.
- If the side airbag assembly or seatback cover has cuts and frayed seams during checking item. (See page RS-41)
- If the side airbag assembly or seatback cover has been found to be faulty during checking item. (See page RS-41)
- If the seatback assembly has been dropped.

CAUTION:

For removal and installation on the seatback assembly, see page RS-39 and RS-49 . Be sure to follow the correct procedure.

SIDE AIRBAG SENSOR ASSEMBLY (2-Door)

RS01Q-15

COMPONENTS

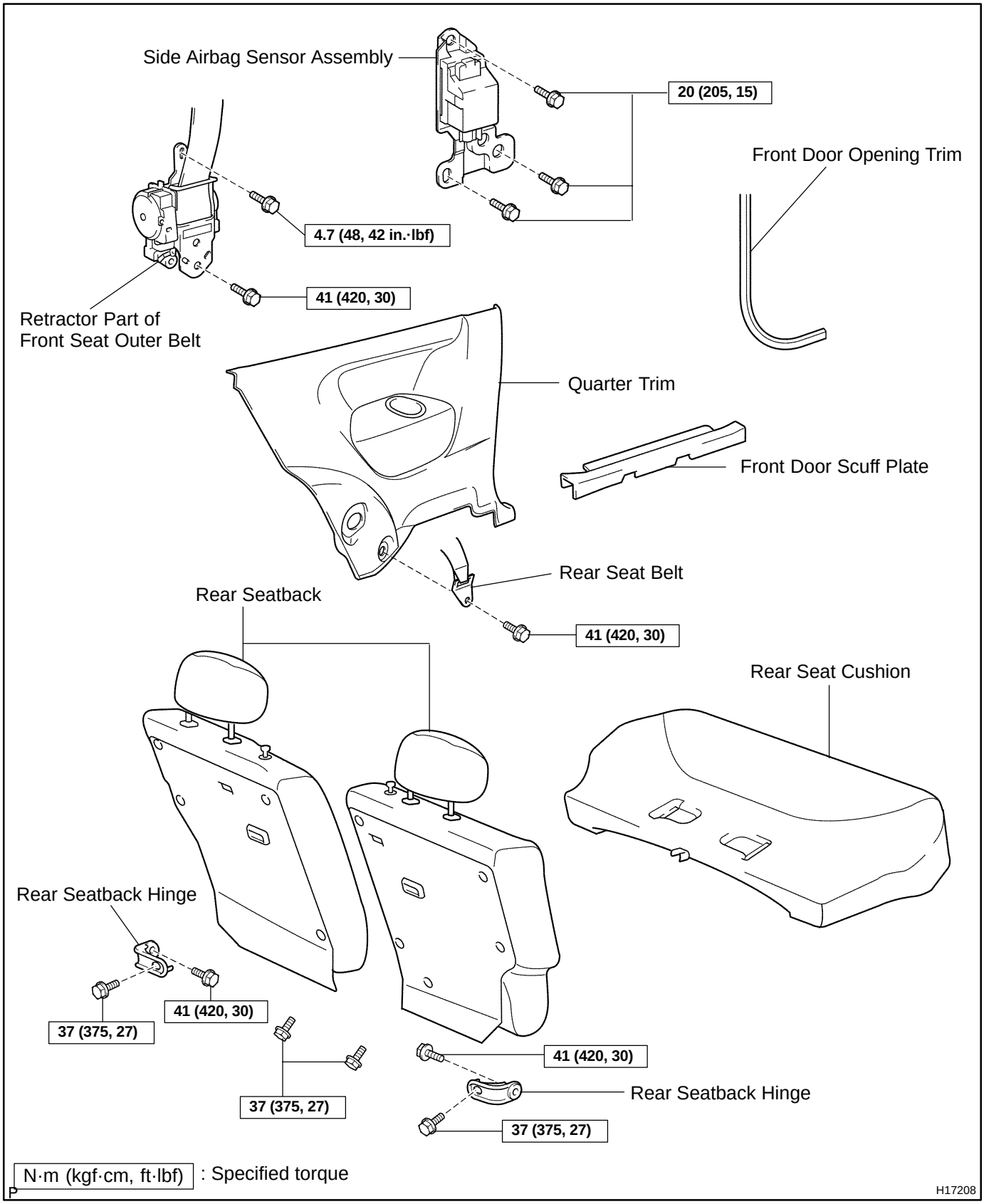

RS05V-08

INSPECTION

1. VEHICLES NOT INVOLVED IN COLLISION

Do a diagnostic system check. (See page DI-239)

2. VEHICLE INVOLVED IN COLLISION AND AIRBAG IS NOT DEPLOYED

Do a diagnostic system check. (See page DI-239)

3. VEHICLE INVOLVED IN COLLISION AND AIRBAG IS DEPLOYED

Replace the side airbag sensor assembly. (See page RS-65)

RS0EA-04

INSTALLATION

NOTICE:

- **Never use SRS parts from another vehicle. When replacing parts, replace them with new ones.**
- **Never reuse the side airbag sensor assembly involved in a collision when the airbag has deployed.**
- **Never repair a sensor in order to reuse it.**

HINT:

For step 2 to 9, refer to page BO-1 10.

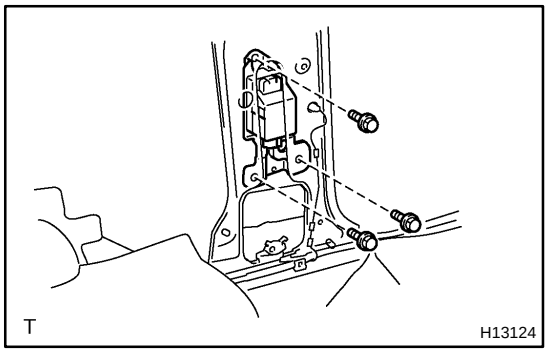

1. INSTALL SIDE AIRBAG SENSOR

(a) Install the side airbag assembly with the 3 bolts.
Torque: 20 N·m (205 kgf·cm, 15 ft·lbf)

(b) Connect the connector.

NOTICE:

- **Connection of the connector is done after the sensor assembly has been installed.**
- **Make sure the sensor assembly is installed with the specified torque.**
- **If the sensor assembly has been dropped, or there are cracks, dents or other defects in the case, bracket or connector, replace the sensor assembly with a new one.**
- **When installing the sensor assembly, take care that the SRS wiring does not interfere with other parts and is not pinched between other parts.**
- **After installation, shake the sensor assembly to check that there is no looseness.**

2. INSTALL RETRACTOR PART OF FRONT SEAT OUTER BELT

3. INSTALL QUARTER TRIM

4. INSTALL REAR SEAT BELT

5. INSTALL REAR SEATBACK HINGE

6. INSTALL REAR SEATBACK

7. INSTALL REAR SEAT CUSHION

8. INSTALL FRONT DOOR OPENING TRIM

9. INSTALL FRONT DOOR SCUFF PLATE

RS0E9-04

REMOVAL

NOTICE:

Do not open the cover or the case of the ECU and various electrical devices unless absolutely necessary.

(If the IC terminals are touched, the IC may be destroyed by static electricity.)

HINT:

For step 1 to 8, refer to page BO-1 10.

1. **REMOVE FRONT DOOR SCUFF PLATE**
2. **REMOVE FRONT DOOR OPENING TRIM**
3. **REMOVE REAR SEAT CUSHION**
4. **REMOVE REAR SEATBACK**
5. **REMOVE REAR SEATBACK HINGE**
6. **REMOVE REAR SEAT BELT**
7. **REMOVE QUARTER TRIM**
8. **REMOVE RETRACTOR PART OF FRONT SEAT OUTER BELT**

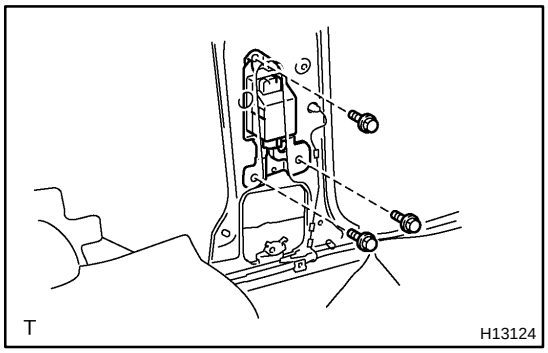

9. **REMOVE SIDE AIRBAG SENSOR ASSEMBLY**

(a) Disconnect the connector.

NOTICE:

Remove the connector with the sensor assembly installed.

(b) Remove the 3 bolts and side airbag sensor assembly.

RS01T-10

REPLACEMENT

REPLACEMENT REQUIREMENTS

In the following cases, replace the side airbag sensor assembly.

- If the side airbag assembly has been deployed in a collision.
- If the side airbag sensor assembly has been found to be faulty in troubleshooting.
- If the side airbag sensor assembly has been dropped.

CAUTION:

For removal and installation of the side airbag sensor assembly, see page RS-63 and RS-66 . Be sure to follow the correct procedure.

SIDE AIRBAG SENSOR ASSEMBLY (4-Door)

RS01Q-16

COMPONENTS

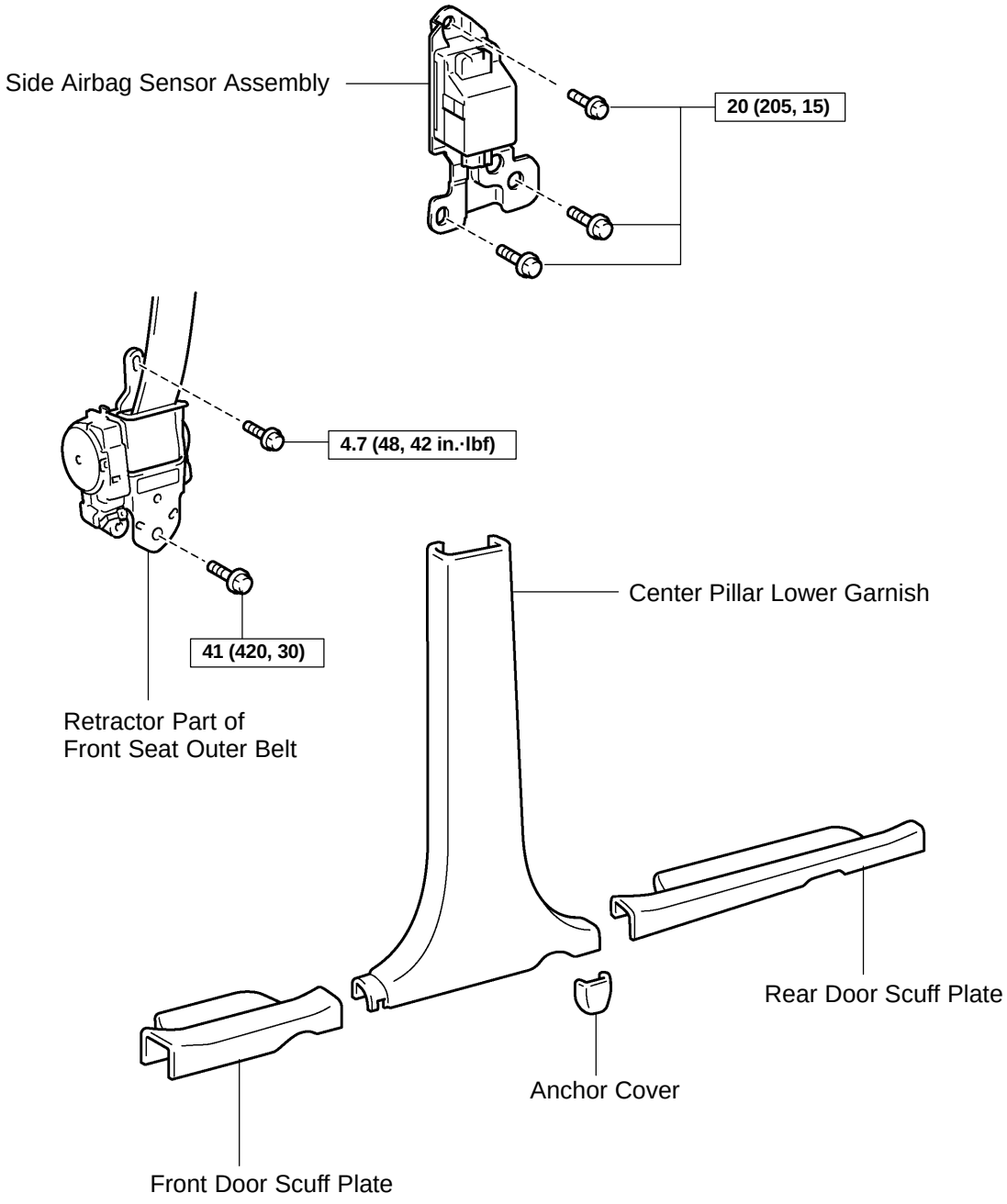

T

N·m (kgf·cm, ft·lbf) : Specified torque

H13126

RS05V-09

INSPECTION

1. VEHICLE NOT INVOLVED IN COLLISION

Do a diagnostic system check. (See page DI-239)

2. VEHICLE INVOLVED IN COLLISION AND AIRBAG IS NOT DEPLOYED

Do a diagnostic system check. (See page DI-239)

3. VEHICLE INVOLVED IN COLLISION AND AIRBAG IS DEPLOYED

Replace the side airbag sensor assembly. (See page RS-70)

RS0HP-04

INSTALLATION

NOTICE:

- **Never use SRS parts from another vehicle. When replacing parts, replace them with new ones.**
- **Never reuse the side airbag sensor assembly involved in a collision when the airbag has deployed.**
- **Never repair a sensor in order to reuse it.**

HINT:

For step 2 to 4, refer to page BO-1 10.

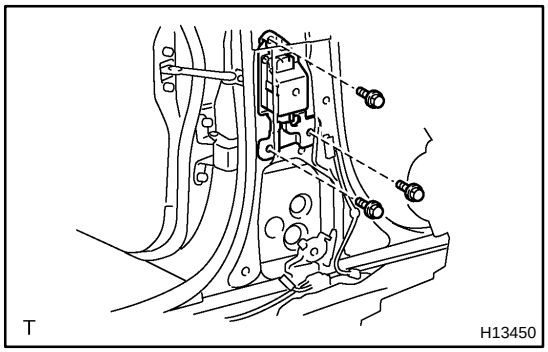

1. INSTALL SIDE AIRBAG SENSOR ASSEMBLY

(a) Install the side airbag sensor assembly with the 3 bolts.
Torque: 20 N·m (205 kgf·cm, 15 ft·lbf)

(b) Connect the side airbag sensor assembly connector.

NOTICE:

- **Connection of the connector is done after the sensor assembly has been installed. Make sure the sensor assembly is installed with the specified torque.**
- **If the sensor assembly has been dropped, or there are cracks, dents or other defects in the case, bracket or connector, replace the sensor assembly with a new one.**
- **When installing the sensor assembly, take care that the SRS wiring does not interfere with other parts and is not pinched between other parts.**
- **After installation, shake the sensor assembly to check that there is no looseness.**

2. INSTALL RETRACTOR PART OF FRONT SEAT OUTER BELT

3. INSTALL CENTER PILLAR LOWER GARNISH

4. INSTALL FRONT AND REAR DOOR SCUFF PLATES

RS0HO-04

REMOVAL

NOTICE:

Do not open the cover or the case of the ECU and various electrical devices unless absolutely necessary.
(If the IC terminals are touched, the IC may be destroyed by static electricity.)

HINT:

For step 1 to 3, refer to page BO-1 10.

1. **REMOVE FRONT AND REAR DOOR SCUFF PLATES**
2. **REMOVE CENTER PILLAR LOWER GARNISH**
3. **REMOVE RETRACTOR PART OF FRONT SEAT OUTER BELT**

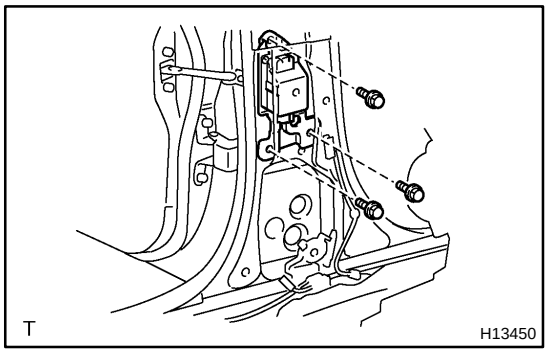

4. **REMOVE SIDE AIRBAG SENSOR ASSEMBLY**

(a) Disconnect the side airbag sensor assembly connector.

NOTICE:

Disconnect the connector with the sensor assembly installed.

(b) Remove the 3 bolts and side airbag sensor assembly.

RS01T-11

REPLACEMENT

REPLACEMENT REQUIREMENTS

In the following cases, replace the side airbag sensor assembly.

- If the side airbag sensor assembly has been deployed in a collision.
- If the side airbag sensor assembly has been found to be faulty in troubleshooting.
- If the side airbag sensor assembly has been dropped.

CAUTION:

For removal and installation of the side airbag sensor assembly, see page RS-68 and RS-71 . Be sure to follow the correct procedure.

RS0SQ-01

OPERATION

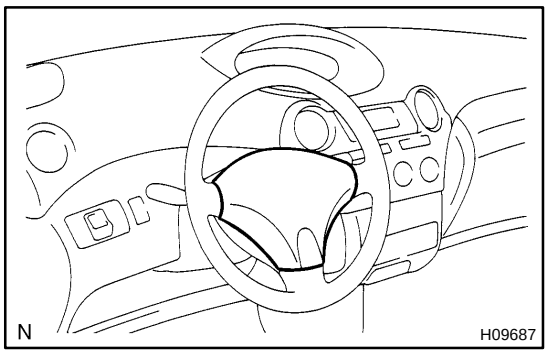

1. STEERING WHEEL PAD (with AIRBAG)

The inflater and bag of the SRS are stored in the steering wheel pad and cannot be disassembled. The inflater contains a squib, igniter charge, gas generator, etc., and inflates the bag when instructed by the airbag sensor assembly.

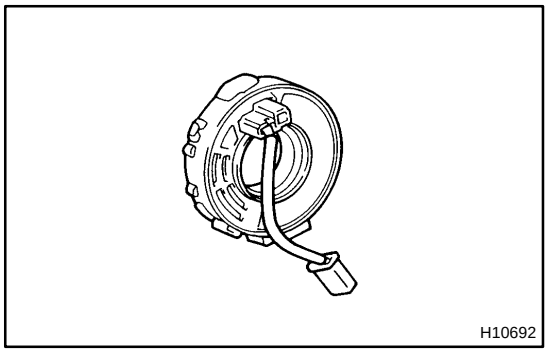

2. SPIRAL CABLE

A spiral cable is used as an electrical joint from the vehicle body side to the steering wheel.

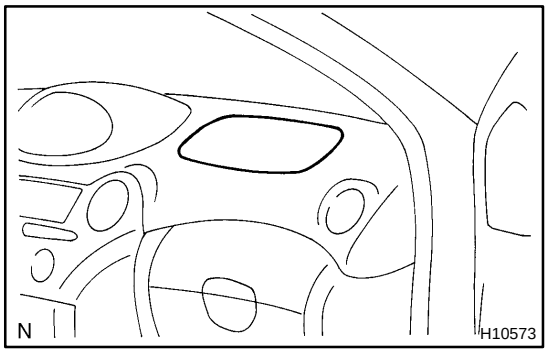

3. FRONT PASSENGER AIRBAG ASSEMBLY

The inflater and bag of the SRS are stored in the front passenger airbag assembly and cannot be disassembled. The inflater contains a squib, igniter charge and gas generator, etc., and inflates the bag when instructed by the airbag sensor assembly.

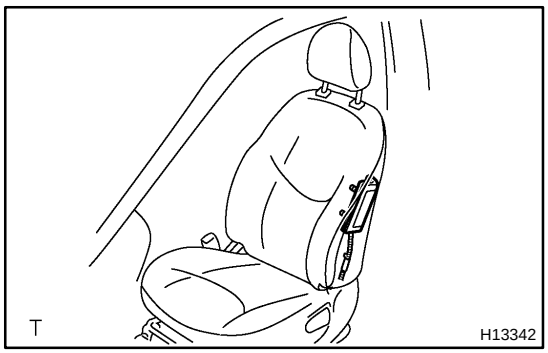

4. SIDE AIRBAG ASSEMBLY

The inflater and bag of the SRS side airbag are stored in the side airbag assembly and cannot be disassembled. The inflater contains a squib, igniter charge and gas generant, etc., and inflates the bag when instructed by the side airbag sensor assembly.

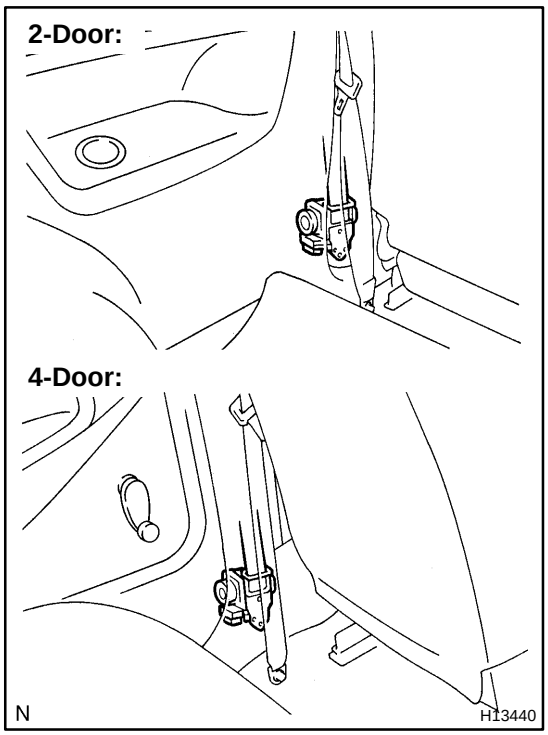

5. SEAT BELT PRETENSIONER

The seat belt pretensioner system is a component of the front seat outer belt. The pretensioner contains a squib, gas generator, wire, piston, etc., and operates in the event of a frontal collision.

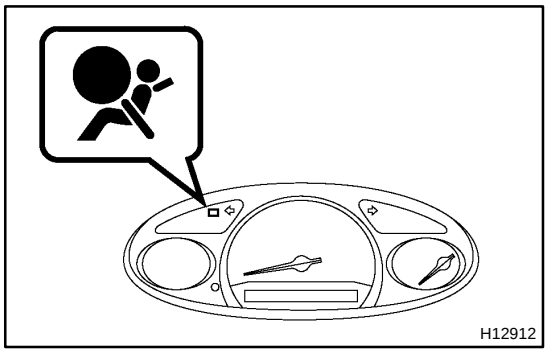

6. SRS WARNING LIGHT

The SRS warning light is located on the combination meter. It goes on to alert the driver of trouble in the system when a malfunction is detected in the airbag sensor assembly self-diagnosis. In normal operation conditions when the ignition switch is turned to the ON position, the light goes on for about 6 seconds and then goes off.

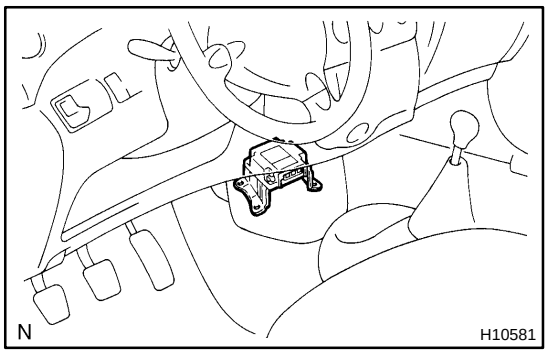

7. AIRBAG SENSOR ASSEMBLY

The airbag sensor assembly is mounted on the floor inside the panel. The airbag sensor assembly consists of an airbag sensor, safing sensor, diagnosis circuit, ignition control and drive circuit, etc. It receives signals from the airbag sensor and judges whether the SRS must be activated or not.

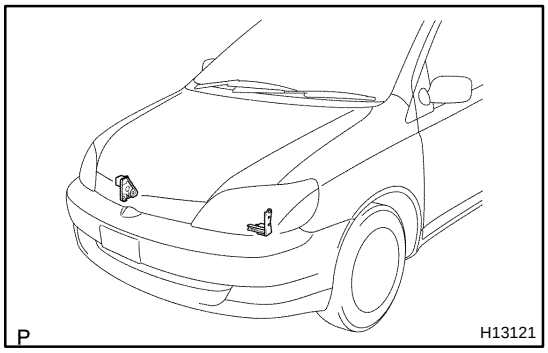

8. FRONT AIRBAG SENSOR

The front airbag sensor is mounted inside each of the side members. The sensor unit is a mechanical type. When the sensor detects deceleration force above a predetermined limit, contact is made in the sensor, sending a signal to the airbag sensor assembly. The sensor cannot be disassembled.

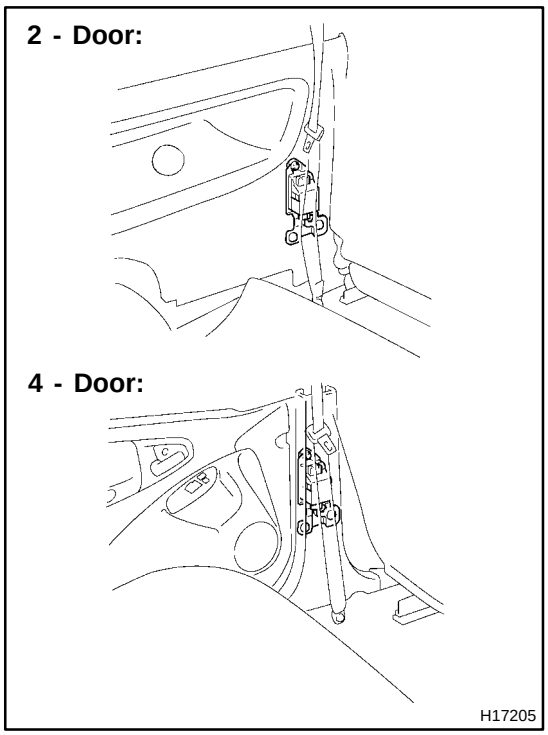

9. SIDE AIRBAG SENSOR ASSEMBLY

The side airbag sensor assembly is mounted in the LH and RH center pillars. The side airbag sensor assembly consists of a side airbag, sensor, safing sensor and diagnosis circuit, etc. It sends signals to the airbag sensor assembly to judges whether the SRS side airbag must be activated or not.

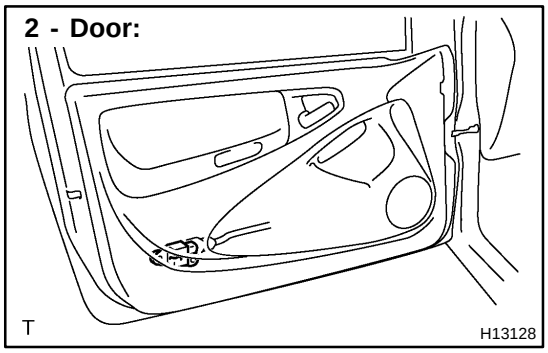

10. DOOR SIDE AIRBAG SENSOR

A door side airbag sensor is mounted on each of the door inside panel. The sensor unit is a mechanical type. When the sensor detects deceleration force above a predetermined limit, contact is made in the sensor, sending a signal to the airbag sensor assembly. The sensor cannot be disassembled.

11. SRS CONNECTORS

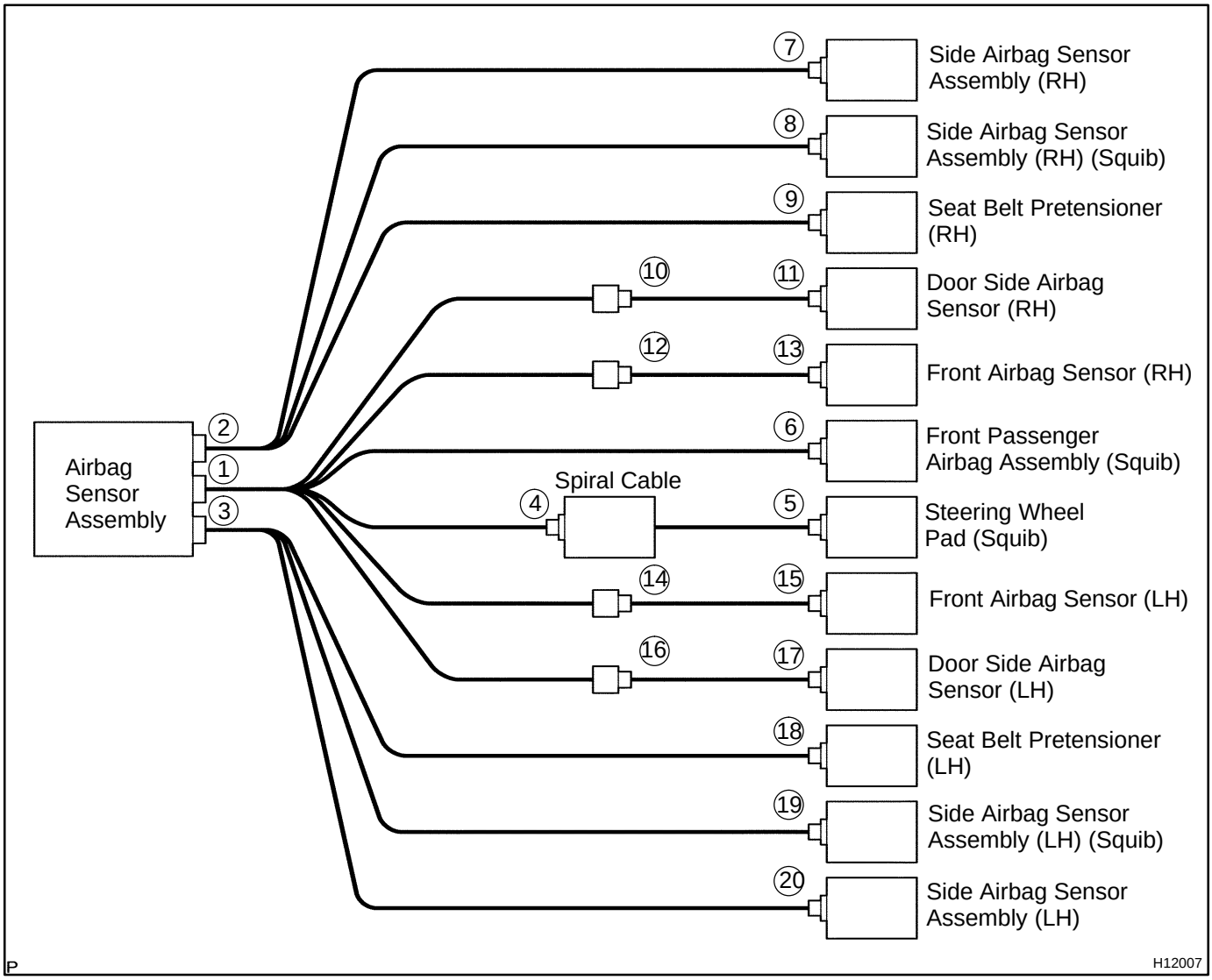

No.	Item	Application
(1)	Terminal Twin-Lock Mechanism	Connectors 1, 2, 3, 4, 5, 6, 7, 8, 9, 10, 11, 12, 13, 14, 15, 16, 17, 18, 19, 20
(2)	Airbag Activation Prevention Mechanism	Connectors 1, 2, 3, 4, 5, 6, 8, 19
(3)	Electrical Connection Check Mechanism	Connectors 1, 2, 3

(a) All connectors in the SRS are colored in yellow to distinguish them from other connectors. Connectors having special functions and specifically designed for the SRS are used in the locations shown on the previous page to ensure high reliability. These connectors use durable gold-plated terminals.

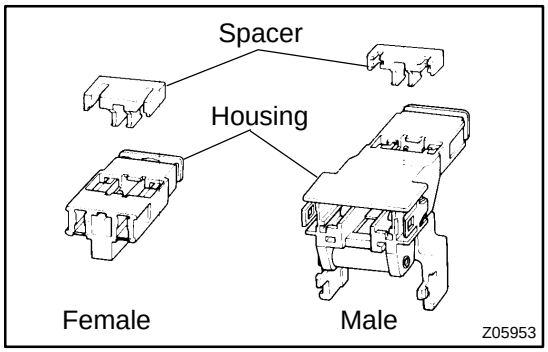

(1) Terminal twin-lock mechanism:
Each connector has a two-piece component consisting of a housing and a spacer. This design enables the terminal to be locked securely by two locking devices (the retainer and the lance) to prevent terminals from coming out.

(2) Airbag activation prevention mechanism:
Each connector contains a short spring plate. When the connector is disconnected, the short spring plate automatically connects positive (+) terminal and negative (-) terminal of the squib.

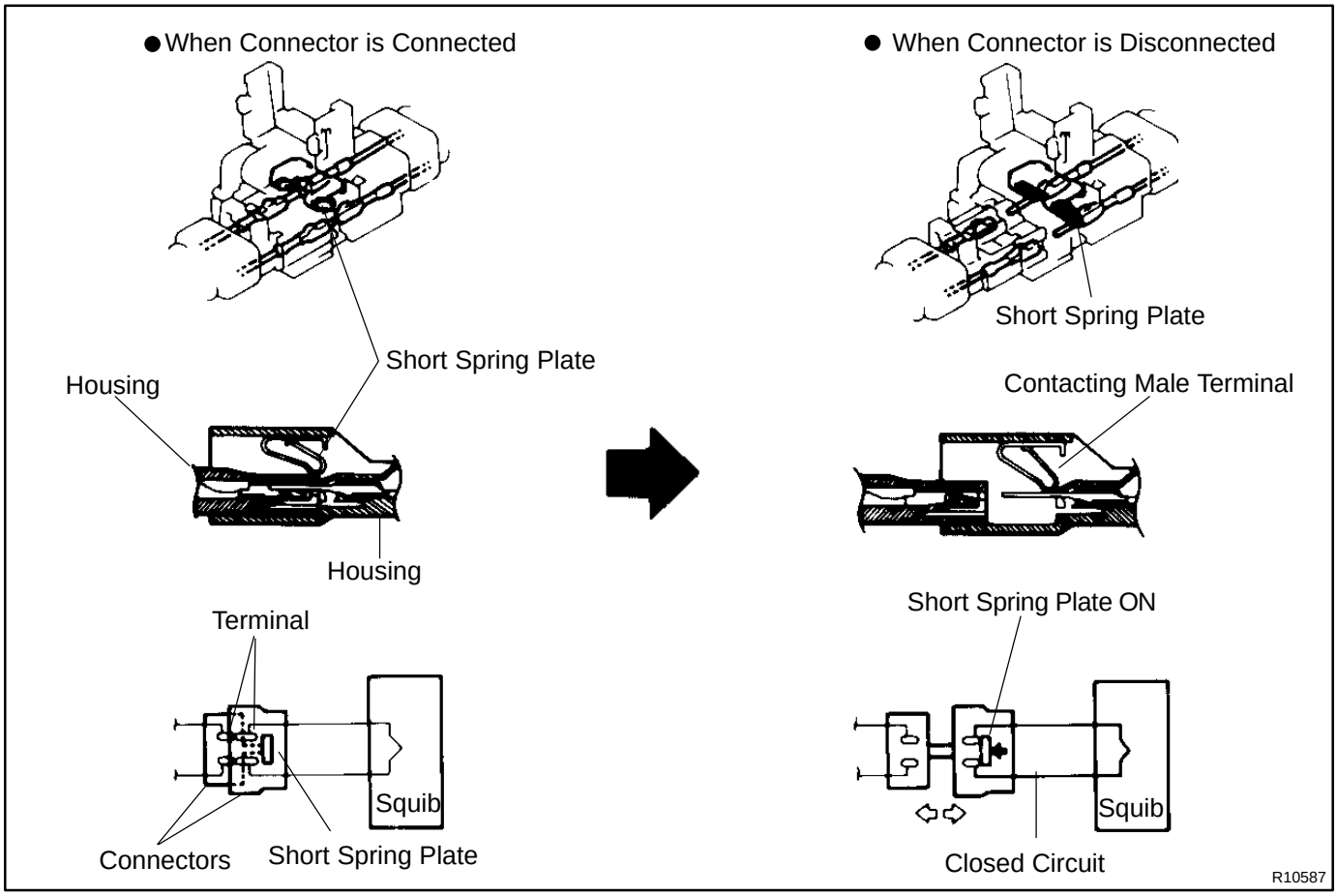

HINT:
The type of connector is shown in the diagram on the previous page.

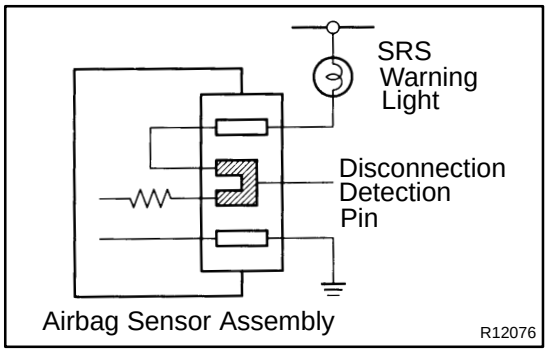

(3) Electrical connection check mechanism:
This mechanism electrically checks that connectors are connected correctly and completely. The electrical connection check mechanism is designed so that the disconnection detection pin connects with the diagnosis terminals when the connector housing lock is locked.

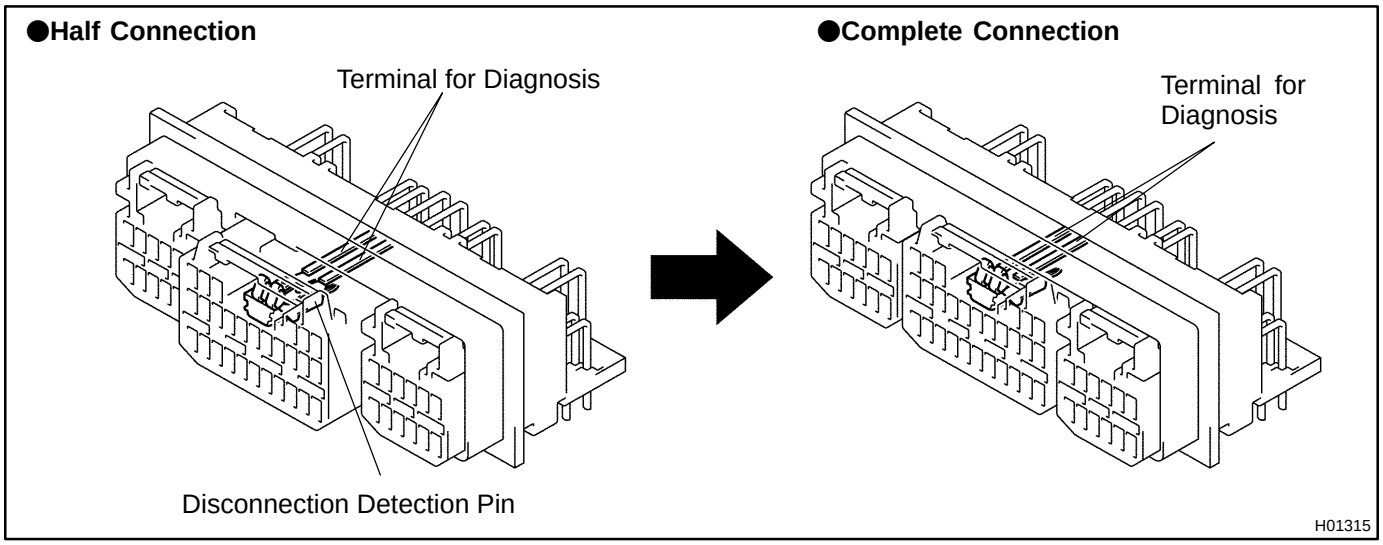

HINT:
The connectors shown in this illustration are connectors, ”1”, ”2” and ”3” in step 8.

(4) Connector Twin-Lock Mechanism
With this mechanism connectors (male and female connectors) are locked by 2 locking devices to increase the connection reliability. If the primary lock is incomplete, ribs interfere and prevent the secondary lock.

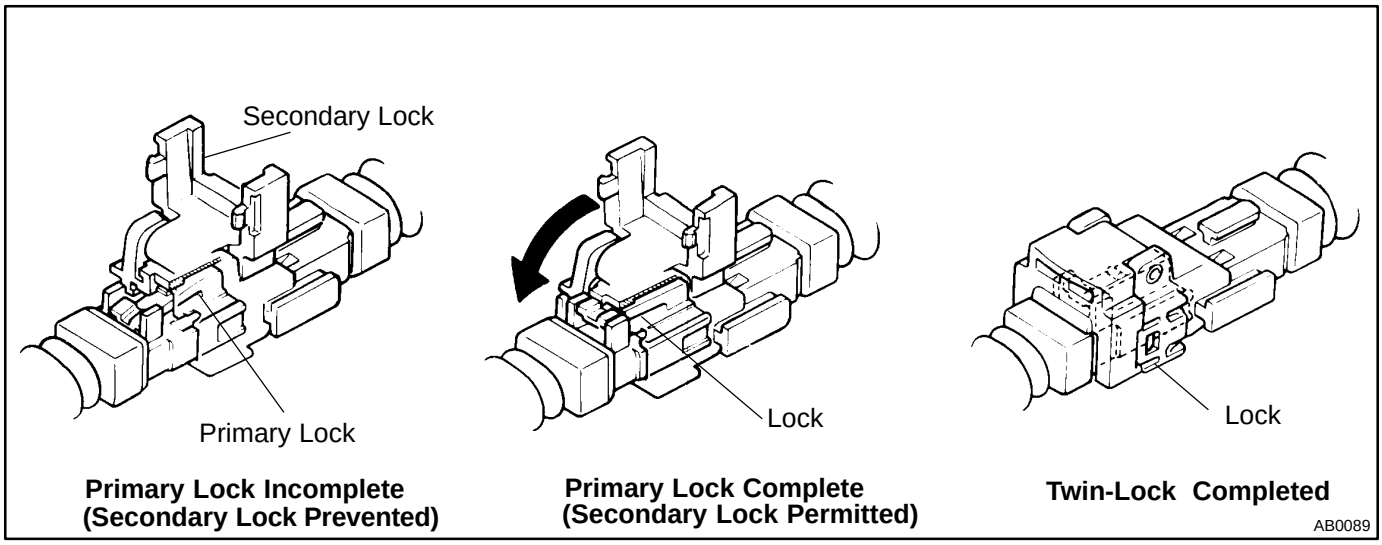

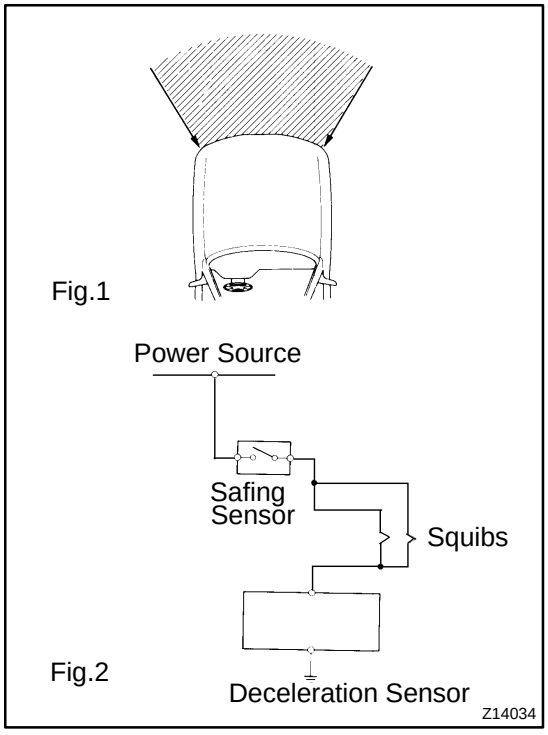

(b) When the vehicle is involved in a frontal collision in the hatched area (Fig. 1) and the shock is larger than the predetermined level, the SRS is activated automatically. A safing sensor is designed to go on at a smaller deceleration rate than the airbag sensor. As illustrated in Fig. 2, ignition is caused when current flows to the squib, which happens when a safing sensor and the deceleration sensor go on simultaneously. When a deceleration force acts on the sensors, 2 squibs in the driver airbag and front passenger airbag ignite and generate gas. The gas discharging into the driver airbag and front passenger airbag rapidly increases the pressure inside the bags, breaking open the steering wheel pad and instrument panel door. Bag inflation then ends, and the bags deflate as the gas is discharged through discharge holes at the bag's rear or side.

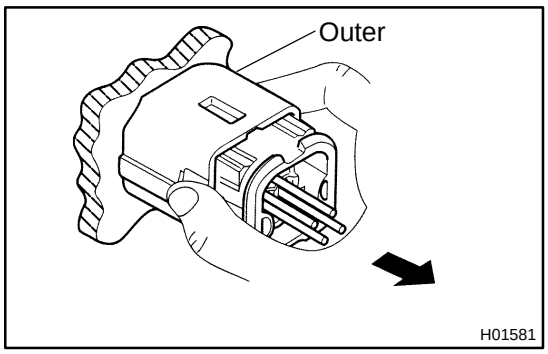

12. DISCONNECTION OF CONNECTORS FOR FRONT AIRBAG SENSOR, SIDE AIRBAG SENSOR AND DOOR SIDE AIRBAG SENSOR

(a) While holding both flank sides of the outer, slide the outer to the direction shown by an arrow.

(b) Lock of the connectors is released, then disconnect the connectors.

HINT:

Make sure to hold both flank sides of the outer. If holding the top and bottom sides, it will obstruct disconnection.

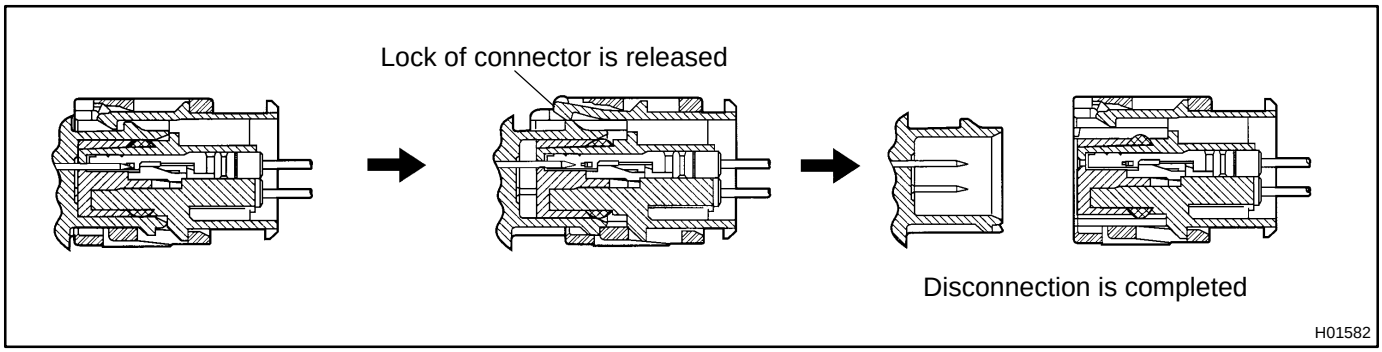

13. CONNECTION OF CONNECTORS FOR FRONT AIRBAG SENSOR, SIDE AIRBAG SENSOR AND DOOR SIDE AIRBAG SENSOR

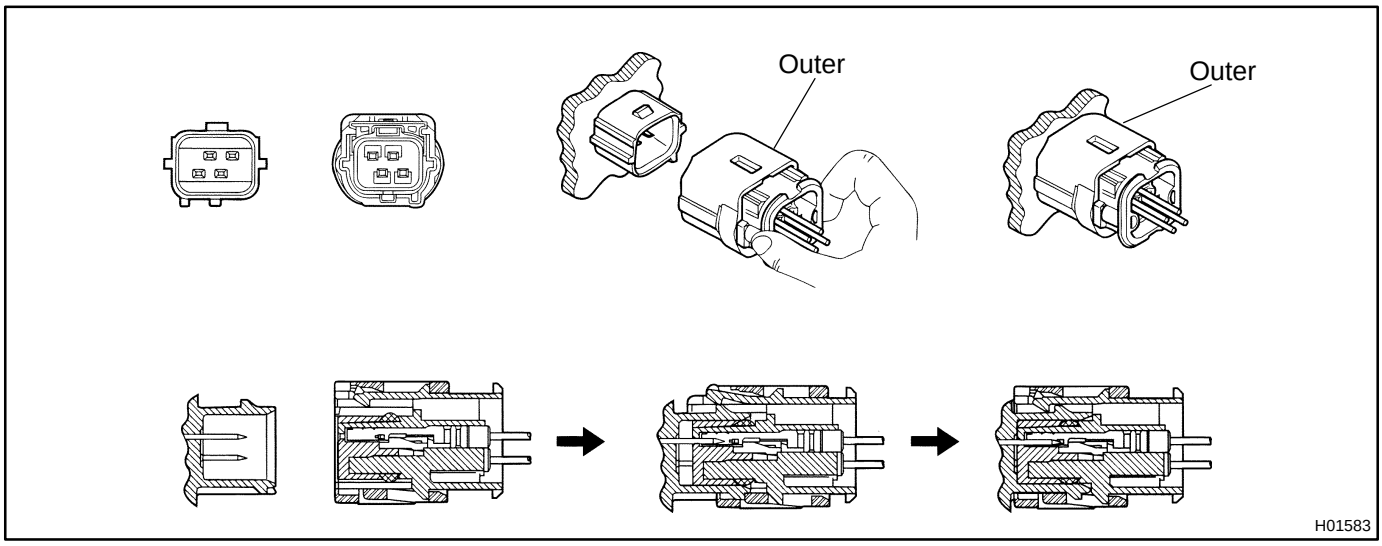

(a) Align the male connector (of the side of sensor) and female connector in the same direction as shown in the illustration and fit in them without rubbing.

(b) As they are fitted in, the outer slides rearward. Press it until the outer returns to its original position again.

If fitting stops half way, connectors will separate.

(c) Make sure to insert until they are locked. After fitting in, pull them slightly to check that they are locked. (When locked, make sure that the outer returns to its original position and sound at the time of fitting in can be heard.)

HINT:

- Do not fit in while holding the outer.
- When fitting in, the outer slides. Do not touch it.

14. DISCONNECTION OF SIDE AIRBAG CONNECTOR

(a) Place a finger on the slider.
(b) Slide the slider to release lock.
(c) Disconnect the connector.

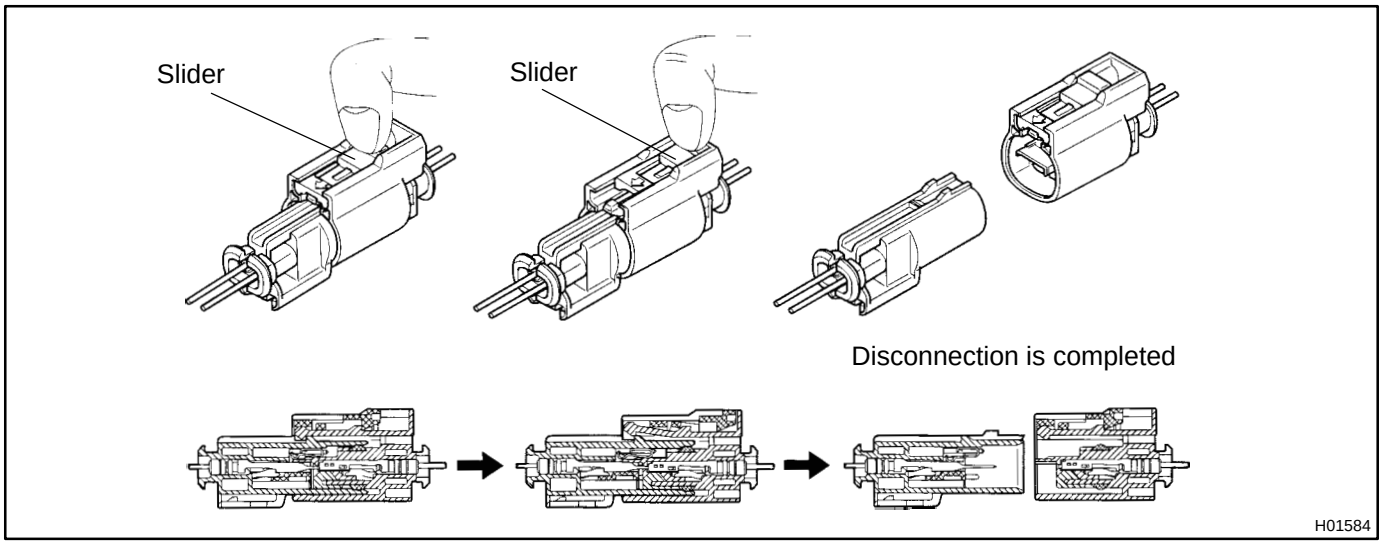

15. CONNECTION OF SIDE AIRBAG CONNECTOR

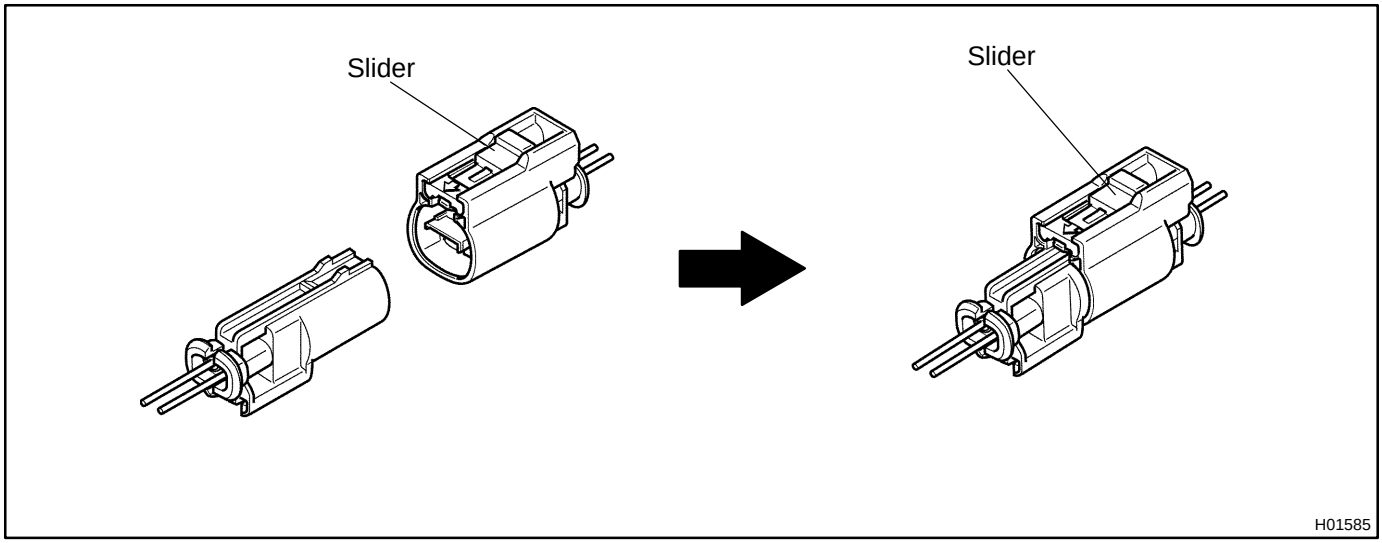

(a) Align a lock part of male connector and a slider of female connector in the same direction as shown in the illustration, fit in them without rubbing.
(b) Make sure to insert until they are locked. After fitting in pull them slightly to check that they are locked. (When locked, make sure that the outer returns to its original position and sound at the time of fitting in can be heard.)

HINT:

- As the slider slides, do not touch it.
- Be careful not to deform the release board. If the release board is deformed, replace it with a new one.

16. DISCONNECTION OF CONNECTORS FOR STEERING WHEEL PAD (with AIRBAG) AND FRONT PASSENGER AIRBAG ASSEMBLY

(a) Place a finger on the slider.
(b) Slide the slider to release lock.
(c) Disconnect the connector.

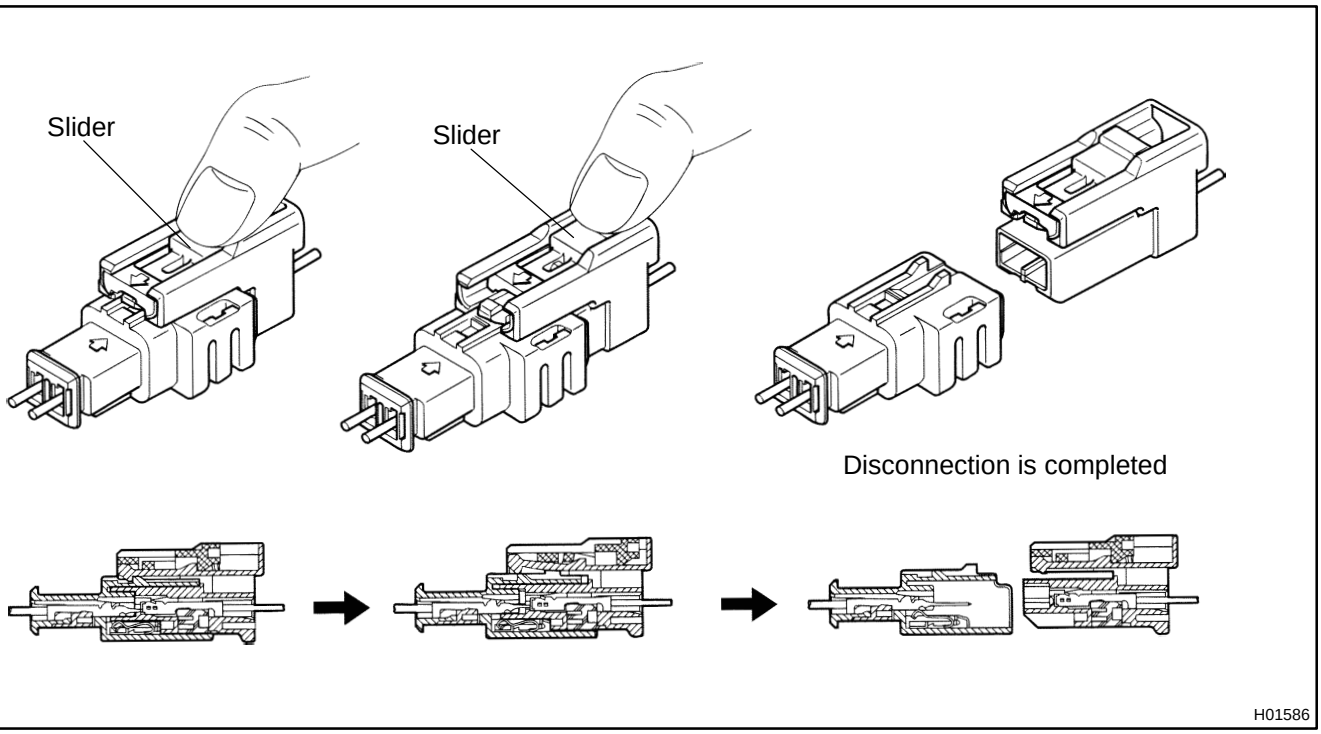

17. CONNECTION OF CONNECTORS FOR STEERING WHEEL PAD (with AIRBAG) AND FRONT PASSENGER AIRBAG ASSEMBLY

(a) Align a lock part of male connector and a slider of female connector in the same direction as shown in the illustration, fit in them without rubbing.

(b) Make sure to insert until they are locked. After fitting in pull them slightly to check that they are locked. (When locked, make sure that the outer returns to its original position and sound at the time of fitting in can be heard.)

HINT:

- As the slider slides, do not touch it.
- Be careful not to deform the release board. If the release board is deformed, replace it with a new one.

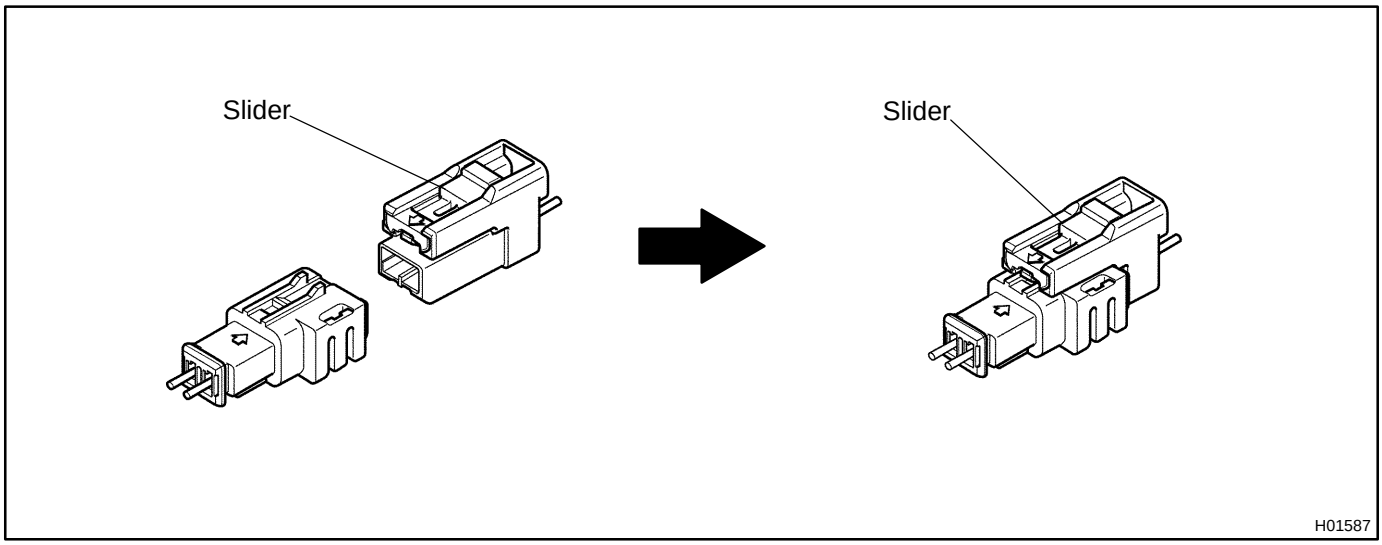

SRS AIRBAG

RS01Y-36

PRECAUTION

CAUTION:

- **The ECHO is equipped with SRS, which comprises a driver airbag, and front passenger airbag. Failure to carry out service operations in the correct sequence could cause the SRS to unexpectedly deploy during servicing, possibly leading to a serious accident. Further, if a mistake is made in servicing the SRS, it is possible that the SRS may fail to operate when required. Before performing servicing (including removal or installation of parts, inspection or replacement), be sure to read the following items carefully, then follow the correct procedures described in the repair manual.**
- **Work must be started 90 seconds after the ignition switch is turned to the "LOCK" position and the negative (-) terminal cable is disconnected from the battery.**
  (The SRS is equipped with a back-up power source so that if work is started within 90 seconds from disconnecting the negative (-) terminal cable of the battery, the SRS may be deployed.)
- **Do not expose the steering wheel pad, front passenger airbag assembly, airbag sensor assembly or front airbag sensor directly to hot air or flames.**

NOTICE:

- **Malfunction symptoms of the SRS are difficult to confirm, so the DTCs become the most important source of information when troubleshooting. When troubleshooting the SRS, always inspect the DTCs before disconnecting the battery.**
- **Even in cases of a minor collision where the SRS does not deploy, the steering wheel pad, front passenger airbag assembly, airbag sensor assembly and front airbag sensor should be inspected. (See page RS-15 , RS-29 , RS-53 and RS-58)**
- **Before repairs, remove the airbag sensor if shocks are likely to be applied to the sensor during repairs.**
- **Never use SRS parts from another vehicle. When replacing parts, replace them with new parts.**
- **Never disassemble and repair the steering wheel pad, front passenger airbag assembly, airbag sensor assembly or front airbag sensor in order to reuse it.**
- **If the steering wheel pad, front passenger airbag assembly, airbag sensor assembly or front airbag sensor has been dropped, or if there are cracks, dents or other defects in the case, bracket or connector, replace it with new one.**
- **Use a volt/ohmmeter with high impedance (10 kΩ/V minimum) for troubleshooting the system's electrical circuits.**
- **Information labels are attached to the periphery of the SRS components. Follow the instructions on the notices.**
- **After work on the SRS is completed, perform the SRS warning light check (See page DI-239).**
- **When the negative (-) terminal cable is disconnected from the battery, the memory of the clock and audio system will be canceled. So before starting work, make a record of the contents memorized in the audio memory system. When work is finished, reset the audio systems as they were before and adjust the clock. To avoid erasing the memory in each memory system, never use a back- up power supply from outside the vehicle.**
- **If the vehicle is equipped with a mobile communication system, refer to the precaution in the IN section.**

STEERING WHEEL PAD AND SPIRAL CABLE

COMPONENTS

RS00Y-48

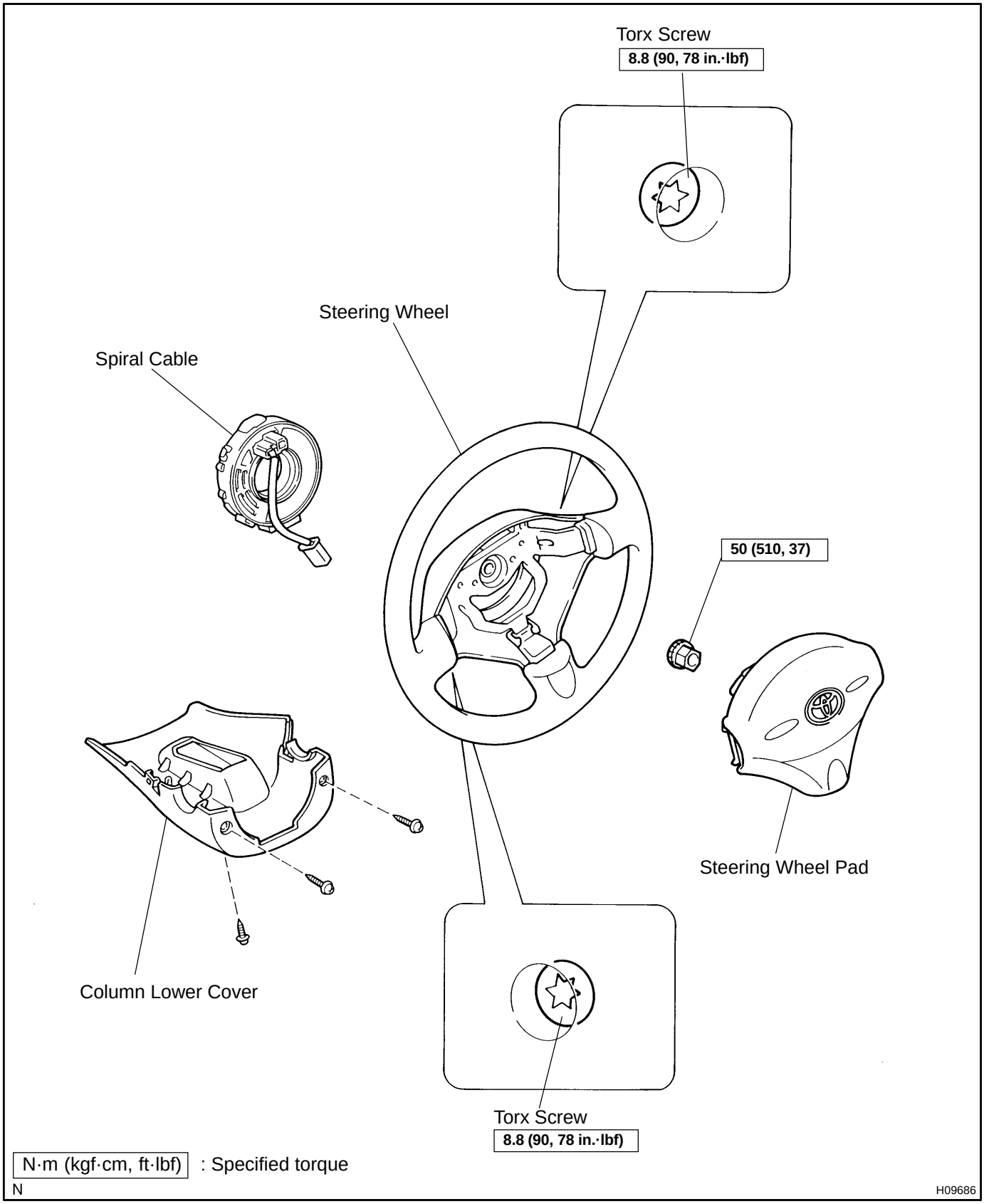

RS0H0-07

DISPOSAL

HINT:

When scrapping vehicle equipped with an SRS or disposing of a steering wheel pad (with airbag), always first deploy the airbag in accordance with the procedure described below. If any abnormality occurs with the airbag deployment, contact the SERVICE DEPT. of the TOYOTA MOTOR SALES, U.S.A., INC.

CAUTION:

- **Never dispose of a steering wheel pad which has an undeployed airbag.**
- **The airbag produces a sizeable exploding sound when it deploys, so perform the operation out-of-doors and where it will not create a nuisance to nearby residents.**

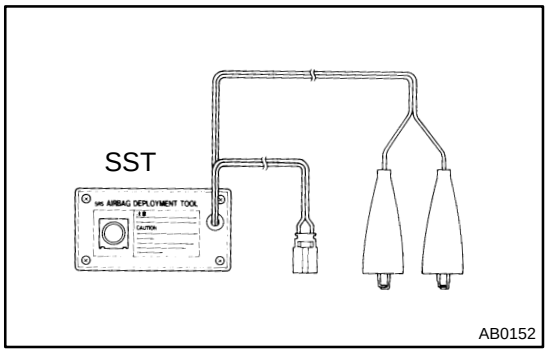

- **When deploying the airbag, always use the specified SST (SRS Airbag Deployment Tool). Perform the operation in a place away from electrical noise.**
  SST 09082-00700
- **When deploying an airbag, perform the operation at least 10 m (33 ft) away from the steering wheel pad.**
- **The steering wheel pad is very hot when the airbag is deployed, so leave it alone for at least 30 minutes after deployment.**
- **Use gloves and safety glasses when handling a steering wheel pad with the deployed airbag.**
- **Always wash your hands with water after completing the operation.**
- **Do not apply water, etc. to a steering wheel pad with the deployed airbag.**

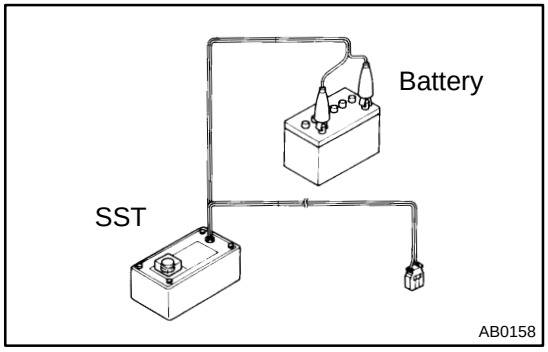

1. AIRBAG DEPLOYMENT WHEN SCRAPPING VEHICLE

HINT:

Have a battery ready as the power source to deploy the airbag.

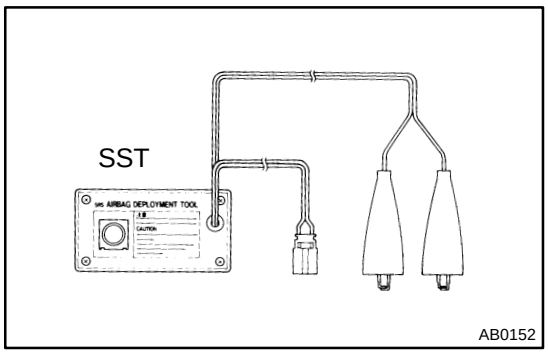

(a) Check functioning of the SST.

CAUTION:

When deploying the airbag, always use the specified SST: SRS Airbag Deployment Tool.

SST 09082-00700

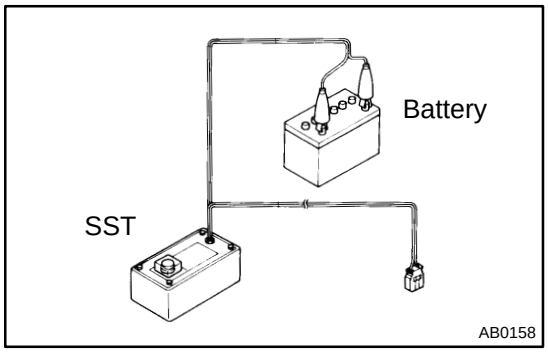

(1) Connect the SST to the battery.
Connect the red clip of the SST to the battery positive (+) terminal and the black clip to the battery negative (-) terminal.

HINT:

Do not connect the yellow connector which will be connected with the supplemental restraint system.

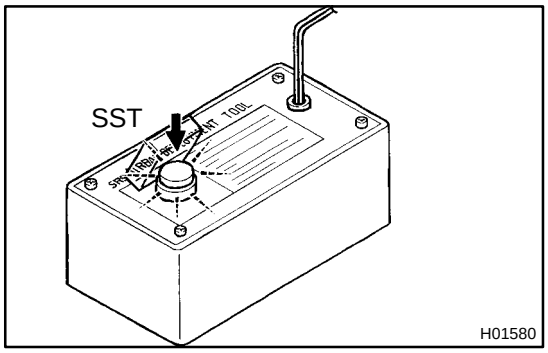

(2) Check functioning of the SST.
Press the SST activation switch, and check that the LED of the SST activation switch lights up.

CAUTION:

If the LED lights up when the activation switch is not being pressed, SST malfunction is probable, so definitely do not use the SST.

(3) Disconnect the SST from the battery.

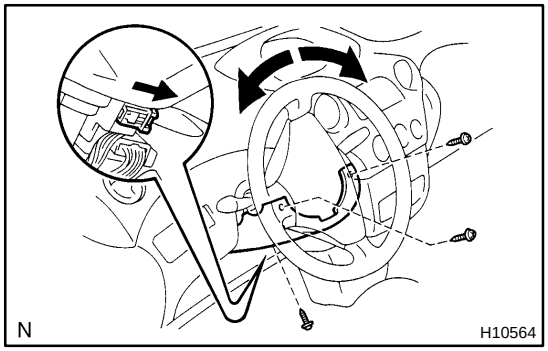

(b) Install the SST.

CAUTION:

Check that there is no looseness in the steering wheel and steering wheel pad.

(1) While turning the steering wheel right / left, remove the 3 screws and column lower cover.

(2) Disconnect the airbag connector of the spiral cable.

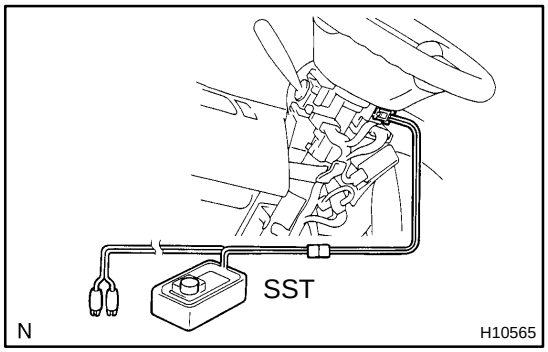

(3) Connect the connectors of the 2 SST to the airbag connector of the spiral cable back side.

SST 09082-00700, 09082-00760

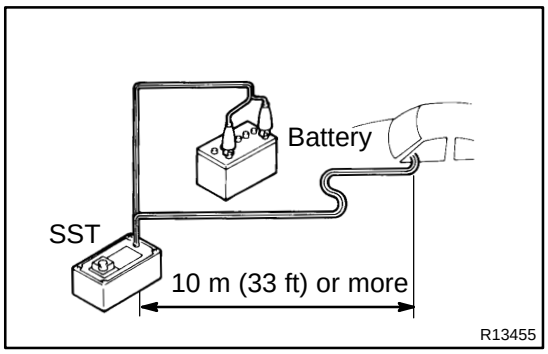

(4) Move the SST at least 10 m (33 ft) away from the front of the vehicle.
(5) Close all the doors and windows of the vehicle.

NOTICE:

Take care not to damage the SST wire harness.

(6) Connect the red clip of the SST to the battery positive (+) terminal and the black clip to the negative (-) terminal.

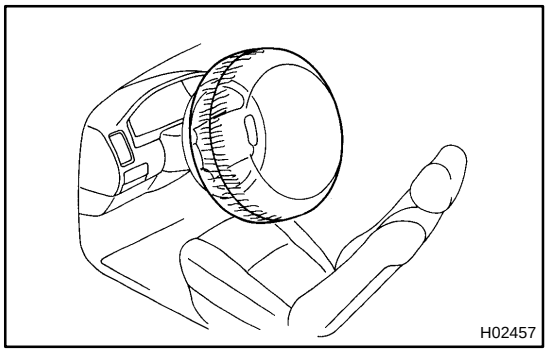

(c) Deploy the airbag.
(1) Confirm that no one is inside the vehicle or within 10 m (33 ft) area around the vehicle.
(2) Press the SST activation switch and deploy the airbag.

HINT:

The airbag deploys simultaneously as the LED of the SST activation switch lights up.

(d) Dispose the steering wheel pad (with airbag).

CAUTION:

- **The steering wheel pad is very hot when the airbag is deployed, so leave it alone for at least 30 minutes after deployment.**
- **When moving a vehicle for scrapping which has a steering wheel pad with deployed airbag, use gloves and safety glasses.**
- **Use gloves and safety glasses when handling a steering wheel pad with the deployed airbag.**
- **Always wash your hands with water after completing the operation.**
- **Do not apply water, etc. to a steering wheel pad with the deployed airbag.**

HINT:

When scrapping a vehicle, deploy the airbag and scrap the vehicle with the steering wheel pad still installed.

2. DEPLOYMENT WHEN DISPOSING OF STEERING WHEEL PAD ONLY

NOTICE:

- **When disposing of the steering wheel pad (with airbag) only, never use the customers vehicle to deploy the airbag.**
- **Be sure to follow the procedure given below when deploying the airbag.**

HINT:

Have a battery ready as the power source to deploy the airbag.

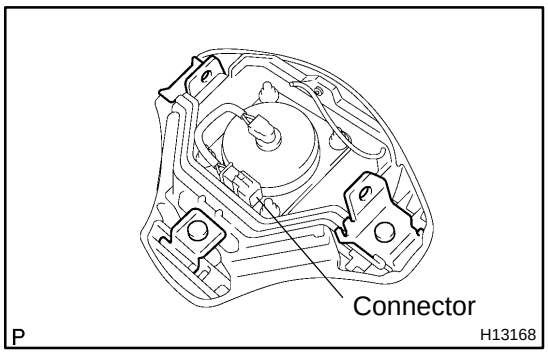

(a) Remove the steering wheel pad. (See page SR-13)

CAUTION:

When storing the steering wheel pad, keep the upper surface of the pad facing upward.

(b) Remove the steering wheel pad connector.

Remove the connector on the rear surface of the steering wheel pad from the bracket.

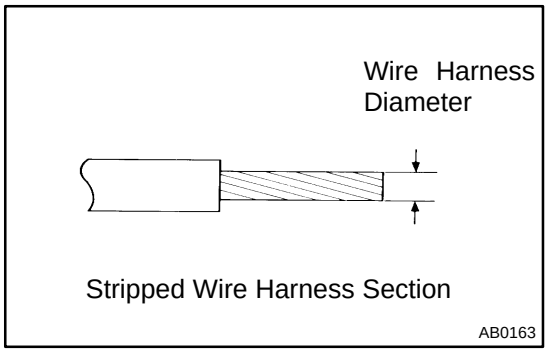

(c) Using a service-purpose wire harness, tie down the steering wheel pad to the disc wheel.

Wire harness: Stripped wire harness section

1.25 mm^2 or more (0.0019 in^2. or more)

CAUTION:

If a wire harness which is too thin or some other thing is used to tie down the steering wheel pad, it may be snapped by the shock when the airbag is deployed. This is highly dangerous. Always use a wire harness for vehicle use which is at least 1.25 mm^2 (0.0019 in^2).

HINT:

To calculate the square of the stripped wire harness section:

Square = 3.14 x (Diameter)^2 divided by 4

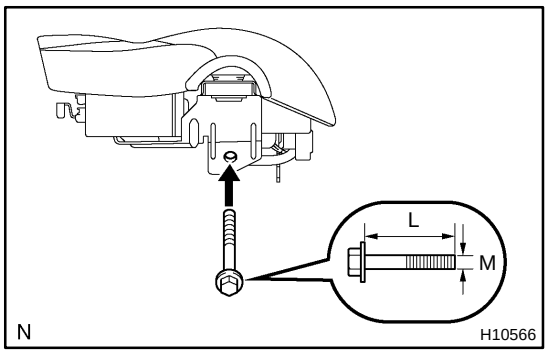

(1) Install the 2 bolts with washers in the 2 bolt holes in the steering wheel pad.

Bolt:

L: 35.0 mm (1.387 in.)

M: 6.0 mm (0.236 in.)

Pitch: 1.0 mm (0.039 in.)

NOTICE:

- **Tighten the bolts by hand until the bolts become difficult to turn.**
- **Do not tighten the bolts too much.**

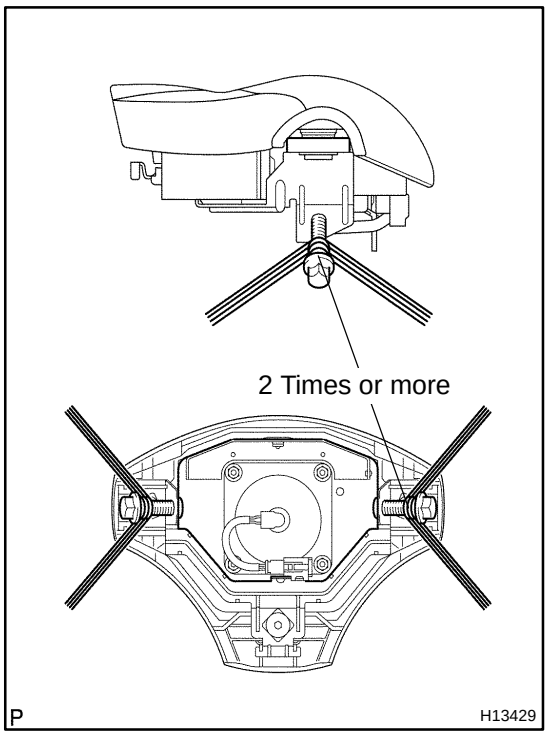

(2) Using 3 wire harness, wind the wire harness at least 2 times each around the bolts installed on the left and right sides of the steering wheel pad.

CAUTION:

- **Tightly wind the wire harness around the bolts so that there is no slack.**
- **If there is slack in the wire harness, the steering wheel pad may come loose due to the shock when the airbag is deployed. This is highly dangerous.**

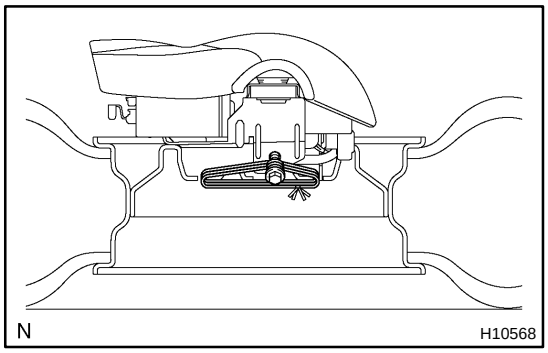

(3) Face the upper surface of the steering wheel pad upward. Separately tie the left and right sides of the steering wheel pad to the disc wheel through the hub nut holes. Position the steering wheel pad connector so that it hangs downward through a hub hole in the disc wheel.

CAUTION:

- **Make sure that the wire harness is tight. It is very dangerous when looseness in the wire harness results in the steering wheel pad coming free through the shock from the airbag deploying.**
- **Always tie down the steering wheel pad with the pad side facing upward. It is very dangerous if the steering wheel pad is tied down with the metal surface facing upward as the wire harness will be cut by the shock from the airbag deploying and the steering wheel pad will be thrown into the air.**

NOTICE:

The disc wheel will be marked by airbag deployment, so when disposing of the airbag use a redundant disc wheel.

(d) Check functioning of the SST. (See step 1-(a))
SST 09082-00700

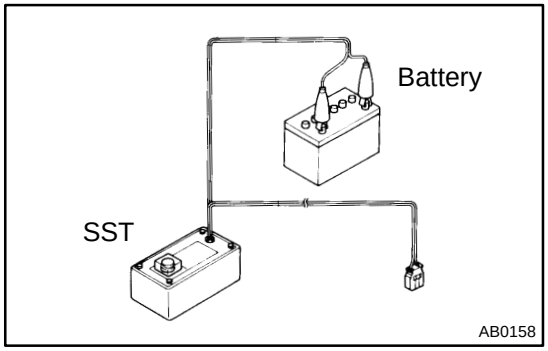

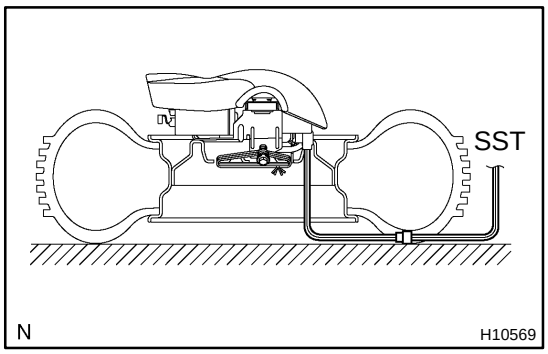

(e) Install the SST.

CAUTION:

Place the disc wheel on the level ground.

(1) Connect the connectors of the 2 SST to the steering wheel pad connector.

SST 09082-00700, 09082-00760

NOTICE:

To avoid damaging the SST connector and wire harness, do not lock the secondary lock of the twin lock. Also, secure some slack for the SST wire harness inside the disc wheel.

(2) Move the SST to at least 10 m (33 ft) away from the steering wheel pad tied down on the disc wheel.

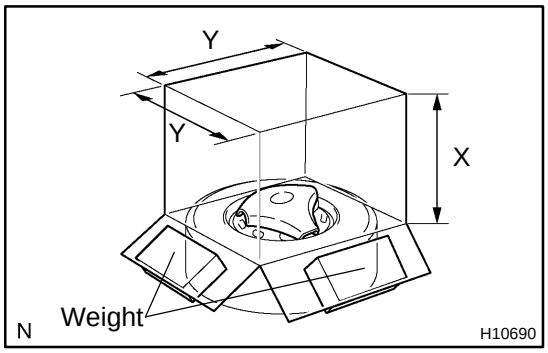

(f) Cover the steering wheel pad with a cardboard box or tires.

- Covering method using a cardboard box:
  Cover the steering wheel pad with the cardboard box and weight the cardboard box down in 4 places with at least 190 N (20 kg, 44 lb).

Size of cardboard box:

Must exceed the following dimensions:

X = 460 mm (18.11 in.)

Y = 650 mm (25.59 in.)

NOTICE:

- **When dimension Y of the cardboard box exceeds the diameter of the disc wheel with tire to which the steering wheel pad is tied, X should be the following size.**
  X = 460 mm (18.11 in.) + width of tire
- **If a cardboard box smaller than the specified size is used, the cardboard box will be broken by the shock from the airbag deployment.**

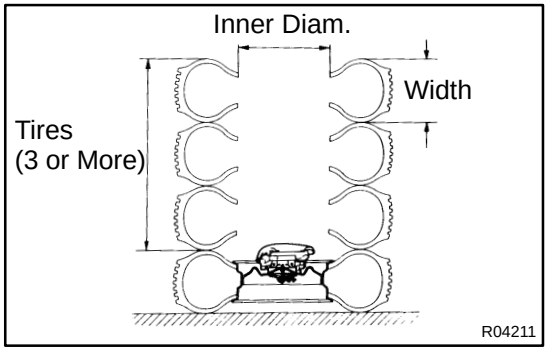

- Covering method using tires:
  Place at least 3 tires without disc wheel on top of the disc wheel with tire to which the steering wheel pad is tied.

Tire size: Must exceed the following dimensions-

Width: 185 mm (7.87 in.)

Inner diameter: 360 mm (14.17 in.)

CAUTION:
Do not use tires with disc wheels.
NOTICE:
The tires may be marked by the airbag deployment, so use the redundant tires.

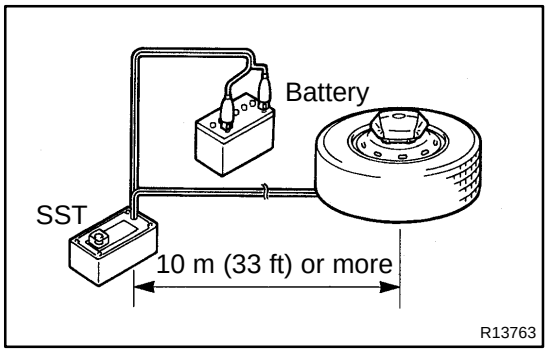

(g) Deploy the airbag.
  (1) Connect the SST red clip to the battery positive (+) terminal and the black clip to the battery negative (-) terminal.
  (2) Check that no one is within 10 m (33 ft) area around the disc wheel which the steering wheel pad is tied to.
  (3) Press the SST activation switch and deploy the airbag.

HINT:
The airbag deploys simultaneously as the LED of the SST activation switch lights up.

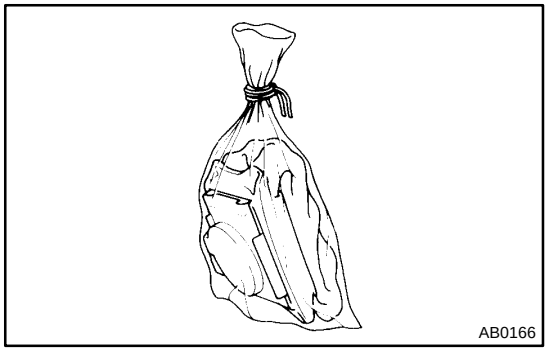

(h) Dispose the steering wheel pad (with airbag).

CAUTION:
- **The steering wheel pad is very hot when the airbag is deployed, so leave it alone for at least 30 minutes after deployment.**
- **Use gloves and safety glasses when handling a steering wheel pad with the deployed airbag.**
- **Always wash your hands with water after completing the operation.**
- **Do not apply water, etc. to a steering wheel pad with the deployed airbag.**
  (1) Remove the steering wheel pad from the disc wheel.
  (2) Place the steering wheel pad in a vinyl bag, tie the end tightly and dispose of it in the same way as other general parts disposal.

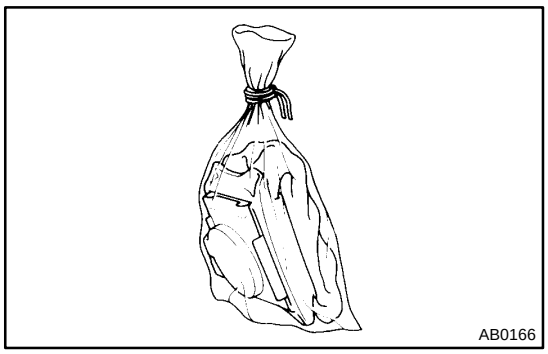
AB0166

3. DEPLOYMENT WHEN DISPOSING OF STEERING WHEEL PAD WITH AIRBAG DEPLOYED IN COLLISION

Dispose the steering wheel pad (with airbag).

CAUTION:

- **The steering wheel pad is very hot when the airbag is deployed, so leave it alone for at least 30 minutes after deployment.**
- **When moving a vehicle for scrapping which has a steering wheel pad with the deployed airbag, use gloves and safety glasses.**
- **Use gloves and safety glasses when handling a steering wheel pad with the deployed airbag.**
- **Always wash your hands with water after completing the operation.**
- **Do not apply water, etc. to a steering wheel pad with the deployed airbag.**

(1) Remove the steering wheel pad from the steering wheel.

(2) Place the steering wheel pad in a vinyl bag, tie the end tightly and dispose of it in the same way as other general parts disposal.

RS010-41

INSPECTION

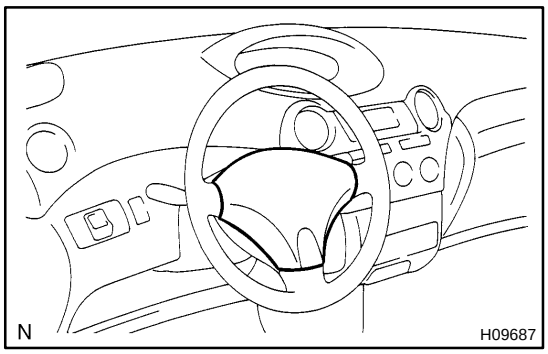

1. VEHICLES NOT INVOLVED IN COLLISION

(a) Do a diagnostic system check. (See page DI-239)

(b) Do a visual check which includes the following item with the steering wheel pad (with airbag) installed in the vehicle.

Check cuts, minute cracks or marked discoloration on the steering wheel pad top surface and in the grooved portion.

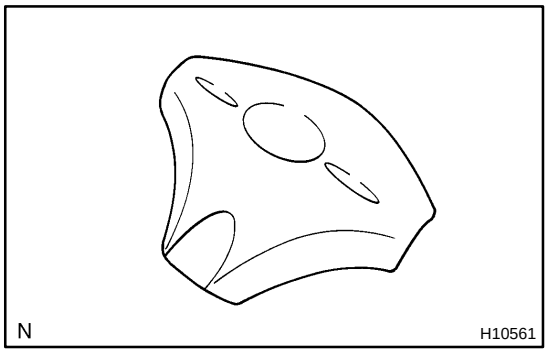

2. VEHICLE INVOLVED IN COLLISION AND AIRBAG IS NOT DEPLOYED

(a) Do a diagnostic system check. (See page DI-239)

(b) Do a visual check which includes the following items with the steering wheel pad (with airbag) removed from the vehicle.

- Check cuts, minute cracks or marked discoloration on the steering wheel pad top surface and in the grooved portion.
- Check cuts and cracks in wire harness, and chipping in connectors.
- Check the deformation on the steering wheel.

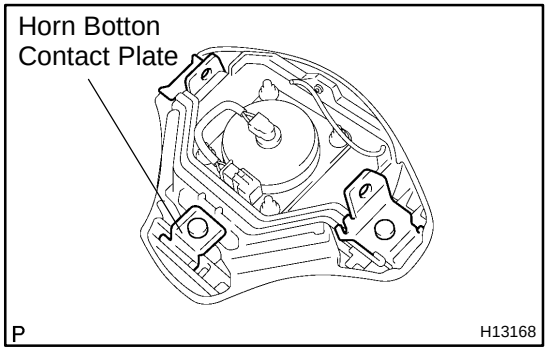

- Check the deformation on the horn button contact plate of the steering wheel pad.

HINT:

- If the horn button contact plate of the steering wheel pad is deformed, never repair it. Always replace the steering wheel pad with a new one.

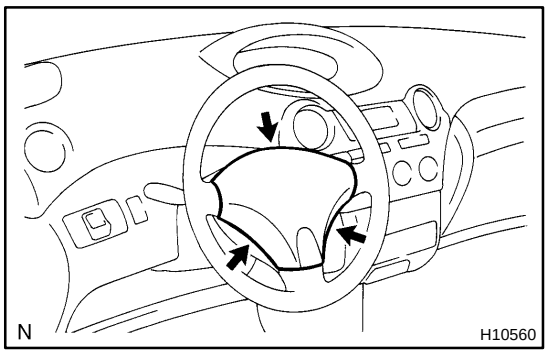

- There should be no interference between the steering wheel pad and steering wheel, and the clearance should be uniform all the way around when the new steering wheel pad is installed on the steering wheel.

CAUTION:

For removal and installation of the steering wheel pad, see page SR-13 and SR-20 , and be sure to follow the correct procedure.

3. VEHICLE INVOLVED IN COLLISION AND AIRBAG IS DEPLOYED

(a) Do a diagnostic system check. (See page DI-239)

(b) Do a visual check which includes the following item with the steering wheel pad (with airbag) removed from the vehicle.

Check the damage on the spiral cable connector and wire harness.

HINT:

There should be no interference between the steering wheel pad and steering wheel, and the clearance should be uniform all the way around when the new steering wheel pad is installed on the steering wheel.

RS013-22

INSTALLATION

HINT:

For step 1 to 4, refer to page SR-20 .

1. **INSTALL SPIRAL CABLE**
2. **INSTALL LOWER COLUMN COVER**
3. **INSTALL STEERING WHEEL**
4. **INSTALL STEERING WHEEL PAD**

RS00Z-21

REMOVAL

HINT:

For step 1 to 4, refer to page SR-13 .

1. **REMOVE STEERING WHEEL PAD**
2. **REMOVE STEERING WHEEL**
3. **REMOVE COLUMN LOWER COVER**
4. **REMOVE SPIRAL CABLE**

RS012-26

REPLACEMENT

REPLACEMENT REQUIREMENTS

In the following cases, replace the steering wheel pad, steering wheel or spiral cable.

Case	Replacing part
If the airbag has been deployed.	Steering wheel pad
If the steering wheel pad has been found to be faulty in troubleshooting.	Steering wheel pad
If the spiral cable has been found to be faulty in troubleshooting.	Spiral cable
If the steering wheel pad has been found to be faulty during checking items. (See page RS-15)	Steering wheel pad
If the steering wheel has been found to be faulty during checking items. (See page RS-15)	Steering wheel
If the spiral cable has been found to be faulty during checking items. (See page RS-15)	Spiral cable
If the steering wheel pad has been dropped.	Steering wheel pad

CAUTION:

For removal and installation of the steering wheel pad, see page SR-13 and SR-20 . Be sure to follow the correct procedure.

RS01W-17

INSPECTION

HINT:

The SRS wire harness is integrated with the instrument panel wire harness assembly. All the connectors in the system are a standard yellow color.

1. VEHICLE NOT INVOLVED IN COLLISION

Do a diagnostic system check. (See page DI-239)

2. VEHICLE INVOLVED IN COLLISION

(a) Do a diagnostic system check. (See page DI-239)

(b) Check breaks in all wires of the SRS wire harness, and exposed conductors.

(c) Check to see if the SRS wire harness connectors are cracked or chipped.

WIRE HARNESS AND CONNECTOR

RS0ST-01

LOCATION

2-Door:

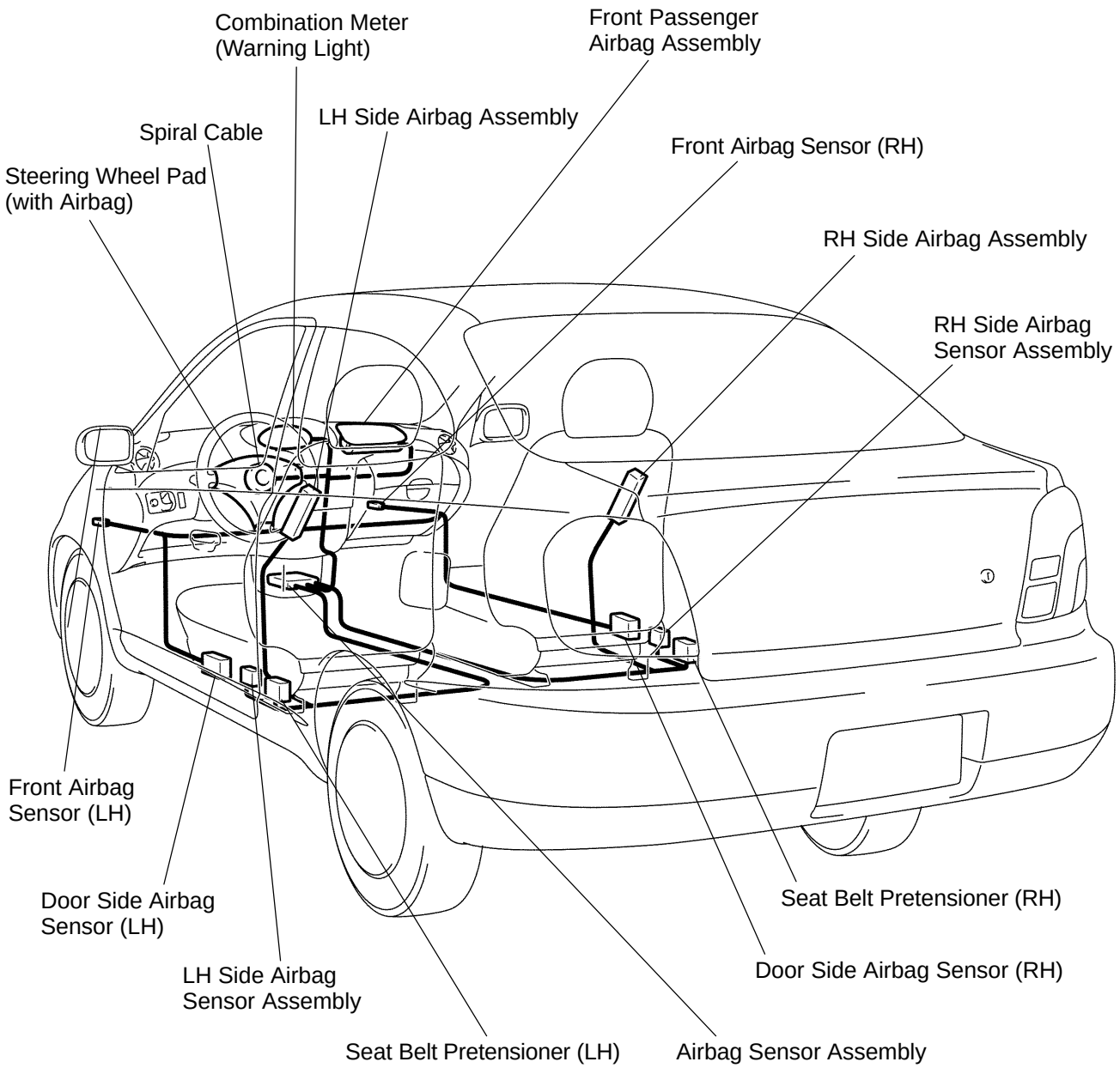

P

H17209

4-Door:

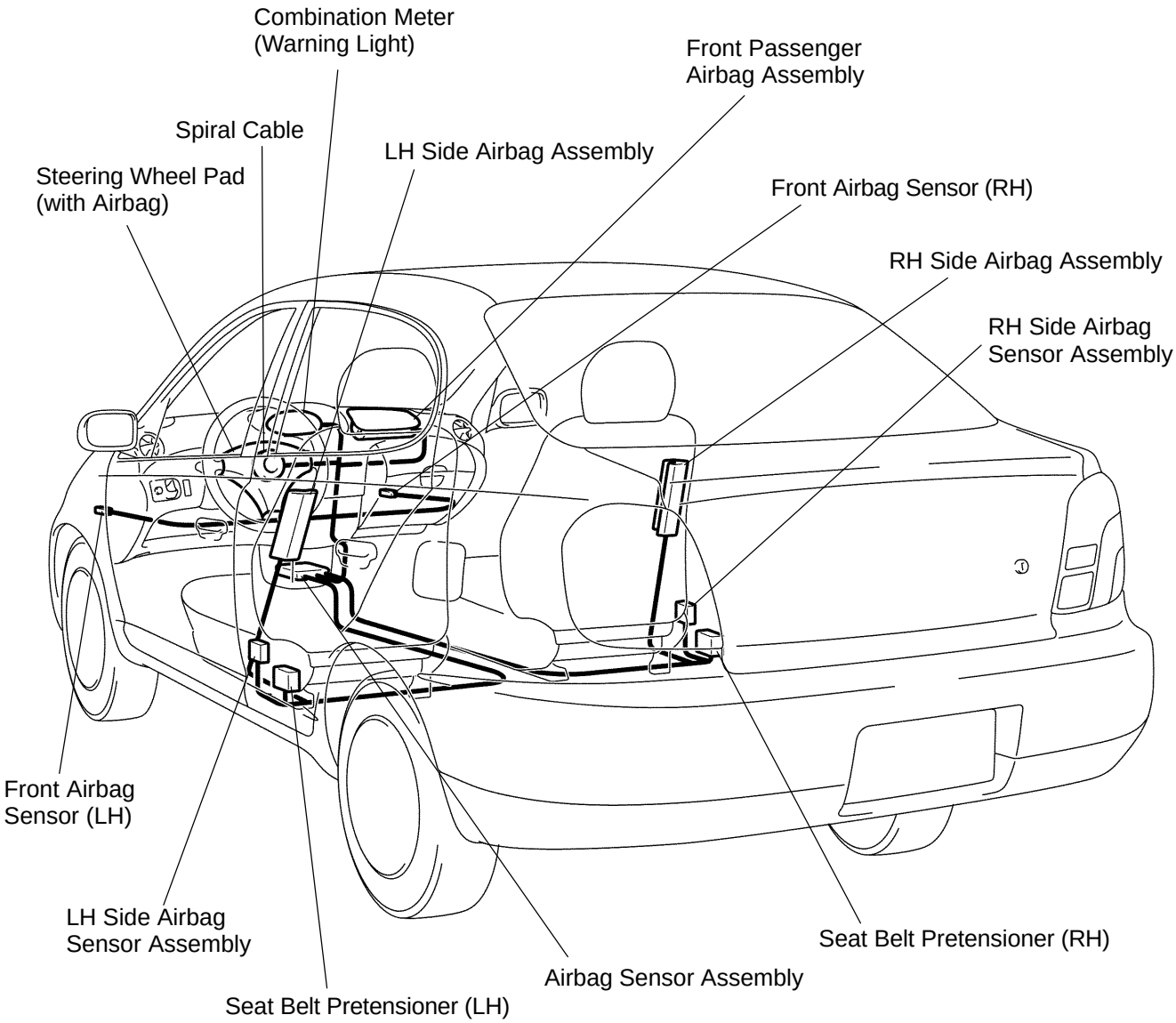

P H17863

RS01X-09

REPLACEMENT

In the following cases, replace the wire harness or connector.

- If any part of the SRS wire harness or any connector has been found to be faulty in troubleshooting.
- If any part of the SRS wire harness or any connector has been found to be faulty during checking items. (See page RS-79)

CAUTION:

If the wire harness used in the SRS is damaged, replace the whole wire harness assembly.

COIL SPRING AND REAR SHOCK ABSORBER

SA1PN-02

COMPONENTS

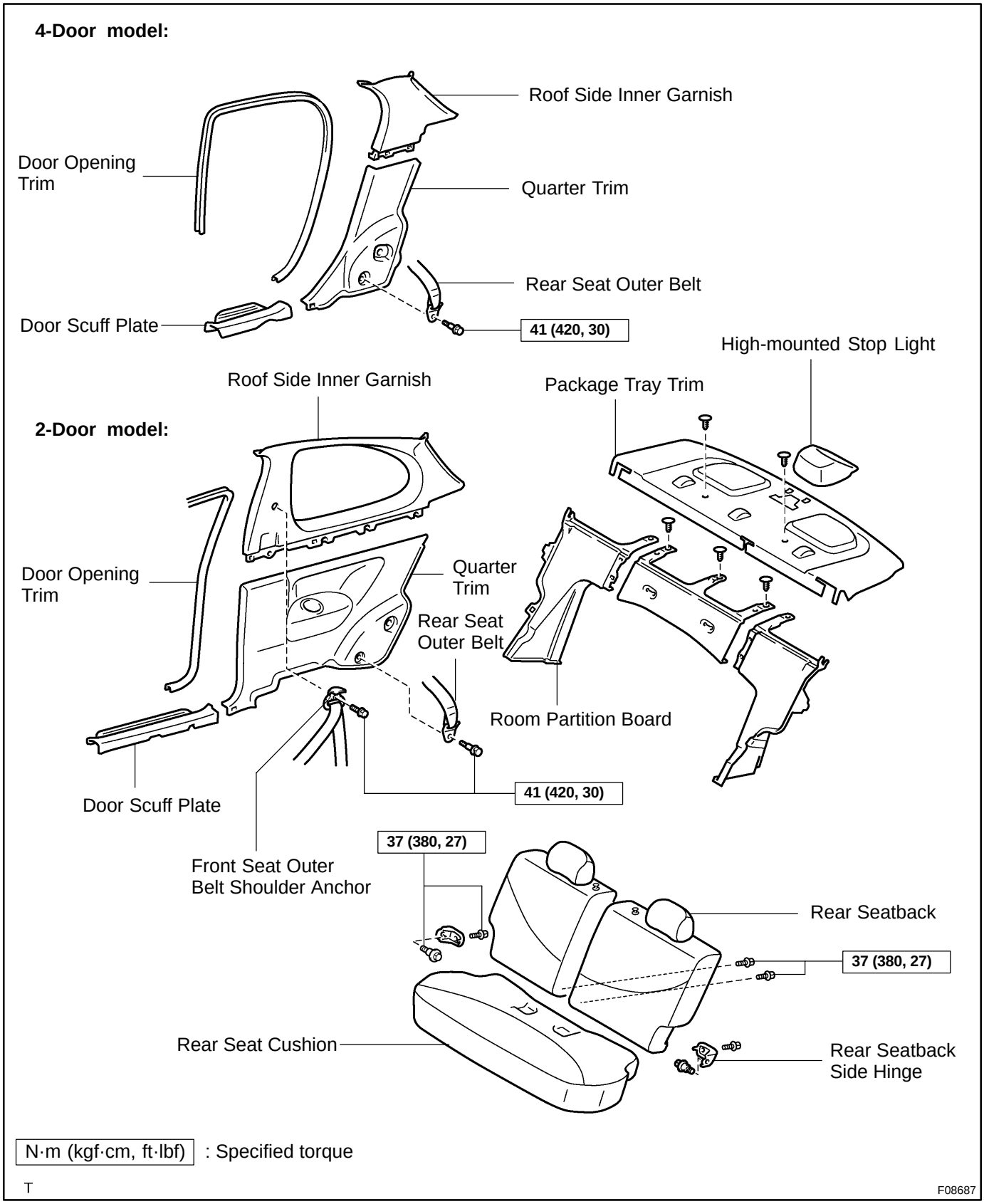

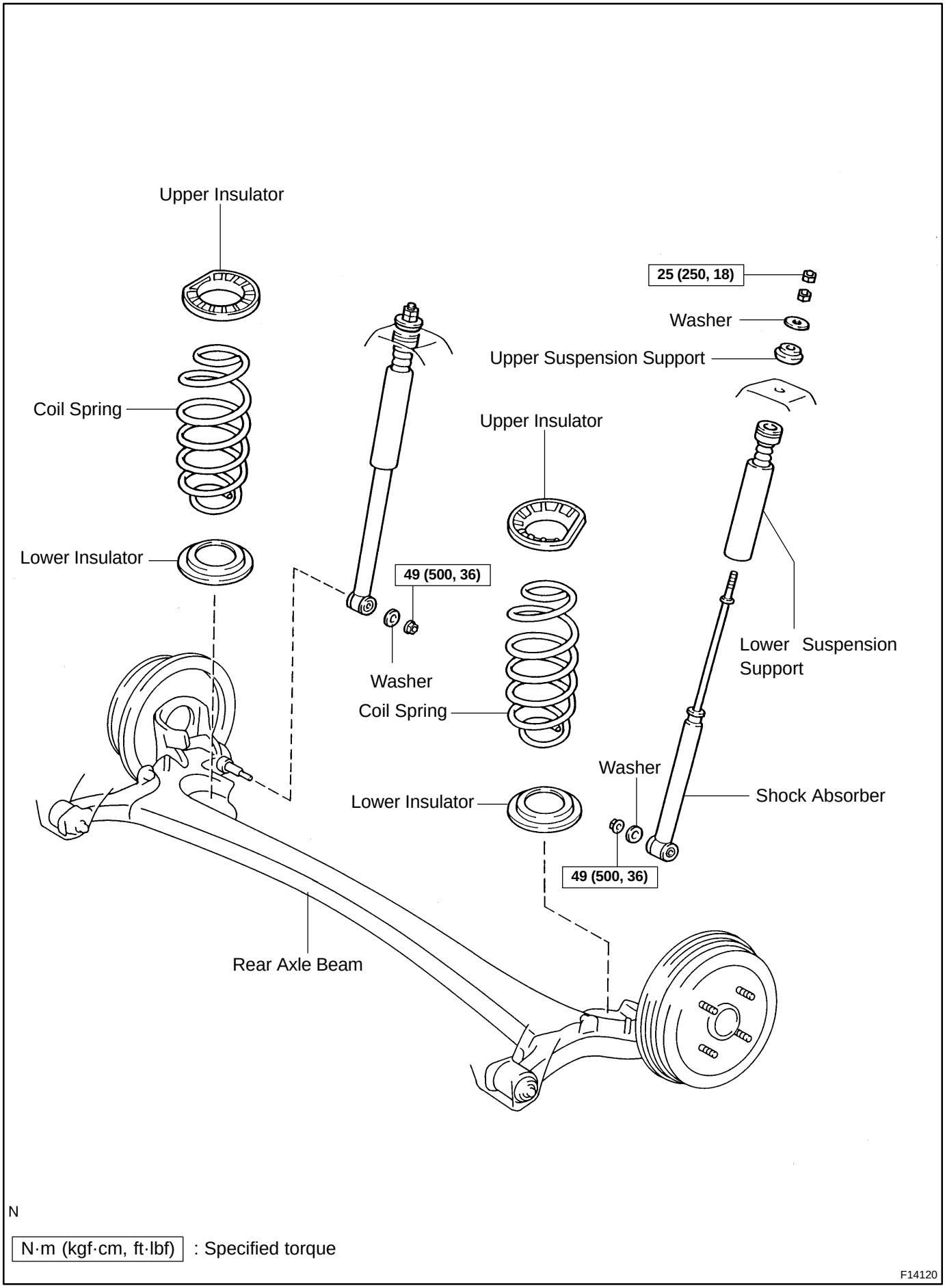
Upper Insulator
Coil Spring
Lower Insulator
25 (250, 18)
Washer
Upper Suspension Support
Upper Insulator
49 (500, 36)
Washer
Coil Spring
Lower Suspension Support
Washer
Lower Insulator
Shock Absorber
49 (500, 36)
Rear Axle Beam
N
N·m (kgf·cm, ft·lbf) : Specified torque
F14120

SA08D-03

DISPOSAL

1. FULLY EXTEND SHOCK ABSORBER ROD

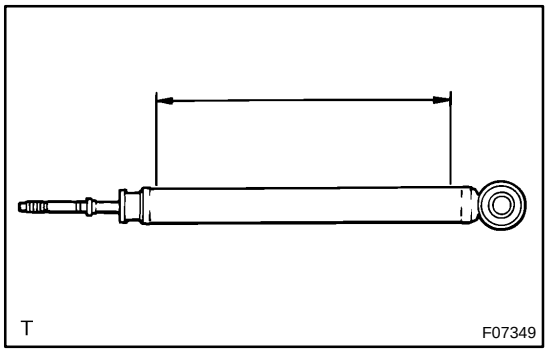

2. DRILL HOLE TO DISCHARGE GAS FROM CYLINDER

Using a drill, make a hole in the cylinder as shown in the illustration to discharge the gas inside.

CAUTION:

- **When drilling, chips may fly out, work carefully.**
- **The gas is colorless, odorless and non-poisonous.**

SA08C-03

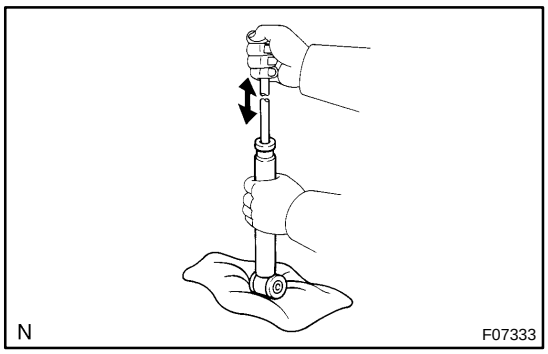

INSPECTION

INSPECT SHOCK ABSORBER

Compress and extend the shock absorber rod and check that there is no abnormal resistance or unusual sound during operation.

If there is any abnormality, replace the shock absorber with a new one.

NOTICE:

When disposing of the shock absorber, see DISPOSAL on page SA-52 .

SA1LB-03

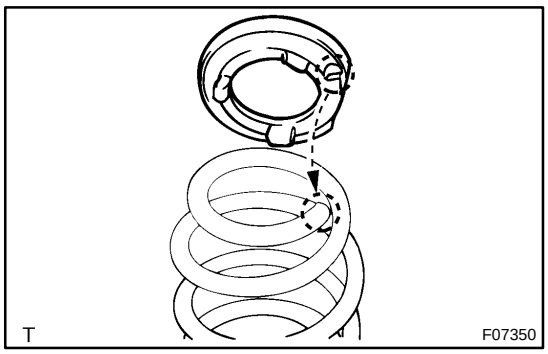

INSTALLATION

1. INSTALL COIL SPRING

(a) Install the upper insulator so that its gap fits to the end of coil spring.

(b) Install the lower insulator and coil spring to the axle beam.

2. INSTALL SHOCK ABSORBER

(a) While lifting the jacks, connect both shock absorbers to axle beam with the washers and nuts.

Torque: 49 N·m (500 kgf·cm, 36 ft·lbf)

HINT:

After stabilizing the suspension, torque the nuts.

(b) Install the lower suspension support to the shock absorber.

(c) Install the shock absorber, upper suspension support and washer to the body.

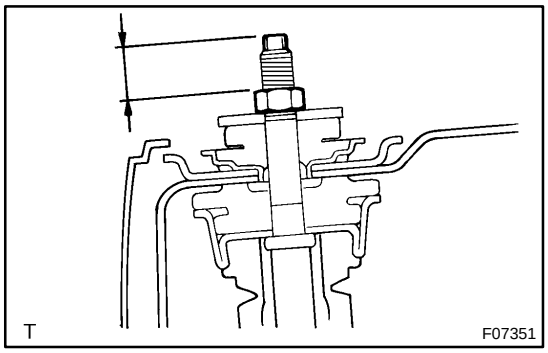

(d) While holding the piston rod, install the lower nut so that the piston rod protrudes 15 - 18 mm (0.591 - 0.709 in.) from the lower nut.

(e) Install the upper nut and torque it against to the lower one.

Torque: 25 N·m (250 kgf·cm, 18 ft·lbf)

3. REMOVE JACKS

4. INSTALL ROOM PARTITION BOARD

5. INSTALL ROOF SIDE INNER GARNISH

(a) Install the roof side inner garnish.

(b) 2-Door model:

Install the front seat outer belt shoulder anchor with the bolt.

Torque: 41 N·m (420 kgf·cm, 30 ft·lbf)

6. INSTALL QUARTER TRIM

(a) Install the quarter trim.

(b) Install the rear seat outer belt with the bolt.

Torque: 41 N·m (420 kgf·cm, 30 ft·lbf)

7. INSTALL DOOR OPENING TRIM AND DOOR SCUFF PLATE

8. INSTALL REAR SEAT

(a) Split type rear seat:

Install the seatback side hinge with the 2 bolts.

Torque: 37 N·m (380 kgf·cm, 27 ft·lbf)

(b) Install the rear seat cushion and seatback

(See page BO-104 or BO-109).

9. INSTALL PACKAGE TRAY TRIM

10. INSTALL REAR WHEELS

Torque: 103 N·m (1,050 kgf·cm, 76 ft·lbf)

SA08A-06

REMOVAL

1. REMOVE REAR WHEELS

2. REMOVE PACKAGE TRAY TRIM

(a) Remove the high-mounted stop light.

(b) Remove the 2 clips and package tray trim.

3. REMOVE REAR SEAT

(a) Remove the rear seat cushion and seatback (See page BO-101 or BO-106).

(b) Split type rear seat:
Remove the 2 bolts and seatback side hinge.

4. REMOVE DOOR SCUFF PLATE AND DOOR OPENING TRIM

5. REMOVE QUARTER TRIM

(a) Remove the bolt and rear seat outer belt.

(b) Remove the quarter trim.

6. REMOVE ROOF SIDE INNER GARNISH

(a) 2-Door model:
Remove the bolt and disconnect the front seat outer belt shoulder anchor.

(b) Remove the roof side inner garnish.

7. REMOVE ROOM PARTITION BOARD

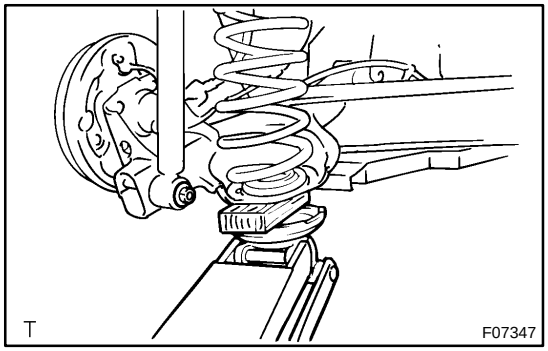

8. SUPPORT REAR AXLE BEAM AT RIGHT AND LEFT SIDES WITH JACKS

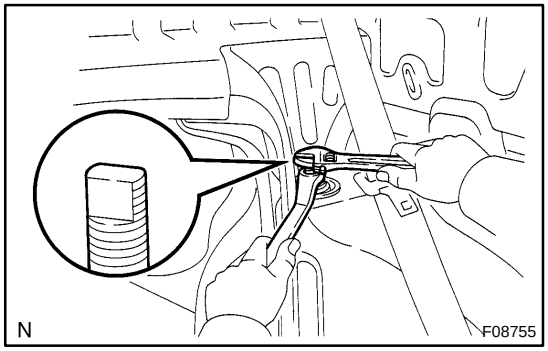

9. REMOVE SHOCK ABSORBER

(a) While holding the piston rod, remove the 2 nuts.

(b) Remove the washer and upper suspension support.

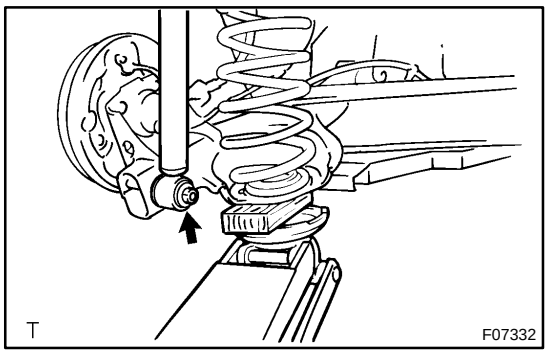

(c) Remove the nut, washer and shock absorber.
(d) Remove the lower suspension support.

10. REMOVE COIL SPRING

(a) Remove the opposite shock absorber lower side set nut and washer, and disconnect the shock absorber from the axle beam.
(b) Lower the jacks gradually.
(c) Remove the coil spring, upper and lower insulators.

FRONT AXLE HUB

COMPONENTS

SA0CF-04

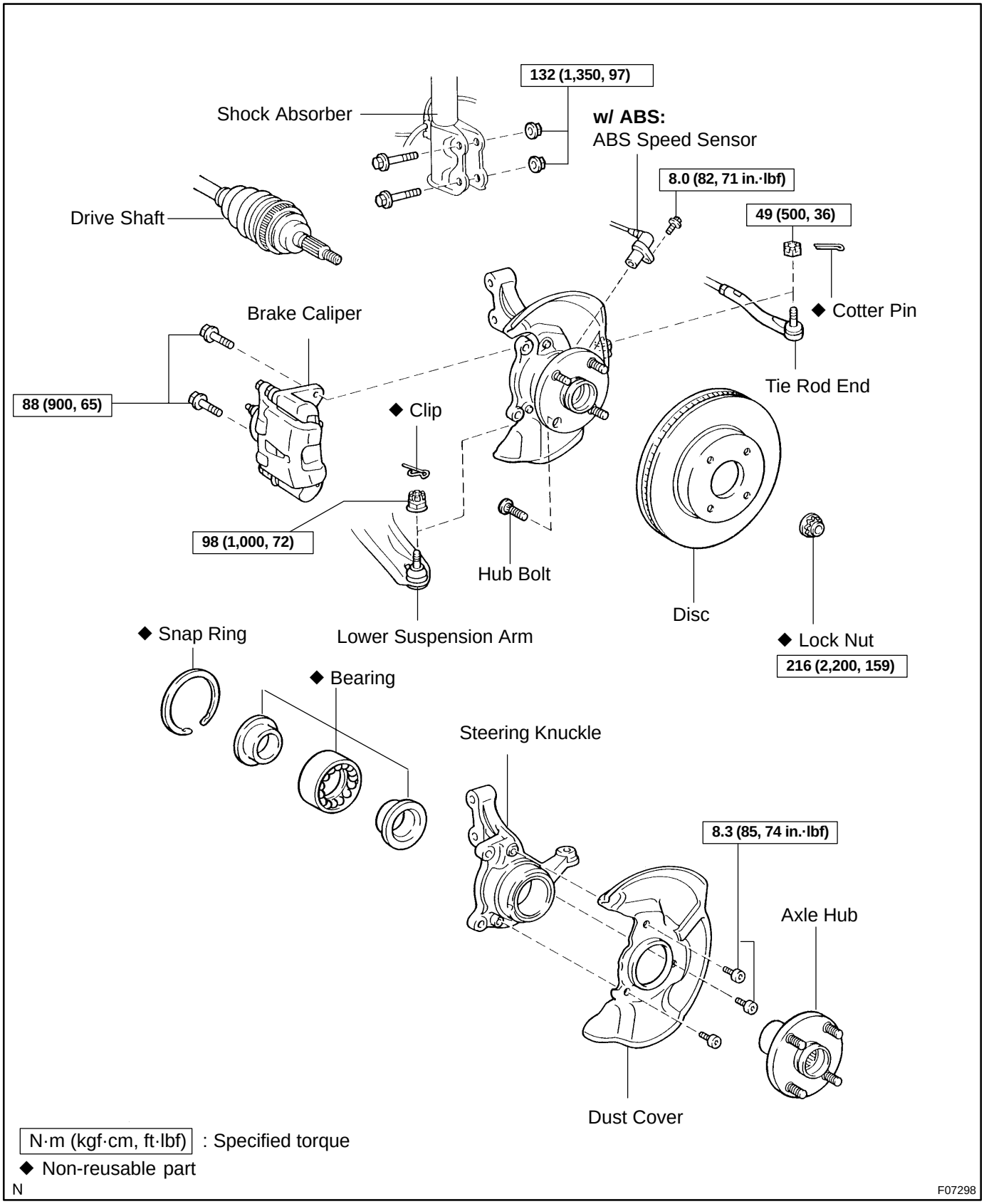

SA1KU-01

DISASSEMBLY

1. REMOVE SNAP RING

Using snap ring pliers, remove the snap ring.

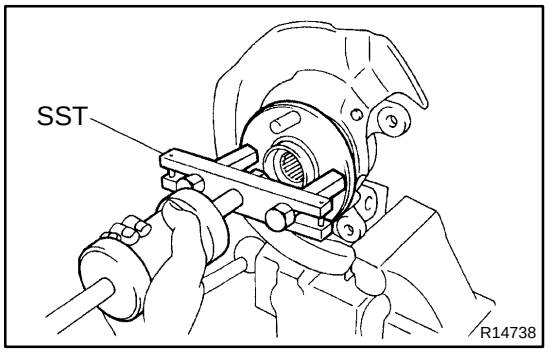

2. REMOVE AXLE HUB

(a) Using SST, remove the axle hub.

SST 09520-00031 (09520-00040, 09521-00010 09521-00020)

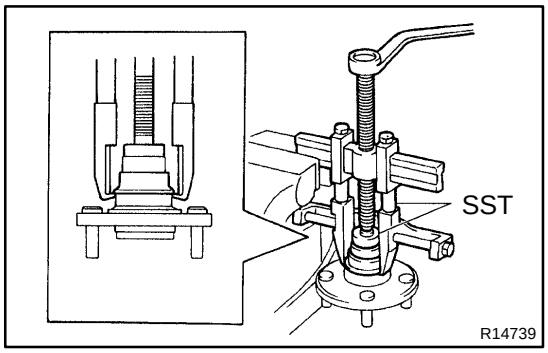

(b) Using SST, remove the inner race (outside) from the axle hub.

SST 09950-4001 1 (09951-04020, 09952-04010, 09953-04020, 09954-04010, 09955-04011, 09957-04010, 09958-04011), 09950-60010 (09951-00370)

3. REMOVE DUST COVER

Using a torx wrench (T30), remove the 3 bolts and dust cover.

4. REMOVE BEARING FROM STEERING KNUCKLE

(a) Place the inner race (outside) on the bearing.

(b) Using SST and a press, remove the bearing from the steering knuckle.

SST 09527-1701 1, 09950-60010 (09951-00600), 09950-70010 (09951-07150)

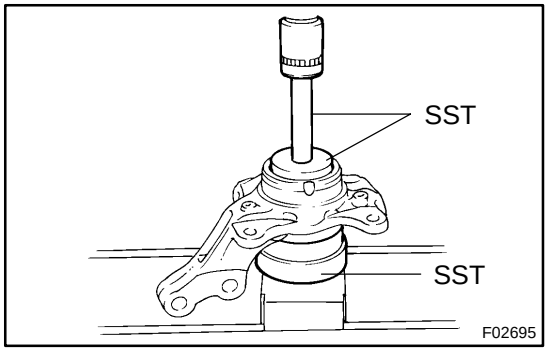

SA1KW-01

INSTALLATION

1. INSTALL STEERING KNUCKLE WITH AXLE HUB TO SHOCK ABSORBER

(a) Install the steering knuckle with the axle hub.

NOTICE:

Be careful not to damage the boot and ABS speed sensor rotor.

(b) Coat the threads of the 2 nuts with engine oil.

(c) Install the 2 bolts and nuts on the lower side of the shock absorber.

Torque: 132 N·m (1,350 kgf·cm, 97 ft·lbf)

2. CONNECT TIE ROD END TO STEERING KNUCKLE

(a) Connect the tie rod end to the steering knuckle with the nut.

Torque: 49 N·m (500 kgf·cm, 36 ft·lbf)

(b) Install a new cotter pin.

If the holes for the cotter pin are not aligned, tighten the nut further up to 60˚.

3. CONNECT STEERING KNUCKLE TO LOWER SUSPENSION ARM

(a) Connect the steering knuckle to the lower suspension arm with the nut.

Torque: 98 N·m (1,000 kgf·cm, 72 ft·lbf)

(b) Install a new clip.

If the holes for the clip are not aligned, tighten the nut further up to 60˚.

4. w/ ABS:

CONNECT ABS SPEED SENSOR

Torque: 8.0 N·m (82 kgf·cm, 71 in.·lbf)

5. INSTALL DRIVE SHAFT LOCK NUT

(a) Install the disc, brake caliper and 2 bolts.

Torque: 88 N·m (900 kgf·cm, 65 ft·lbf)

(b) While applying the brakes, install a new lock nut.

Torque: 216 N·m (2,200 kgf·cm, 159 ft·lbf)

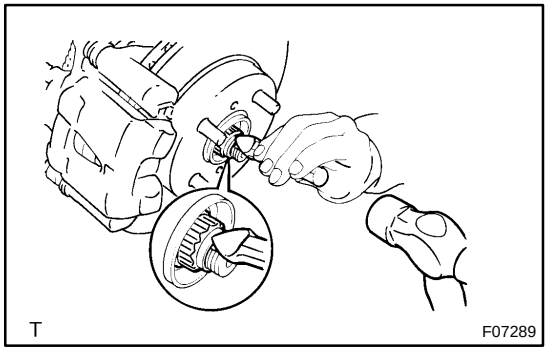

(c) Using a chisel and hammer, stake the lock nut.

6. CHECK BEARING BACKLASH AND AXLE HUB DEVIATION (See page SA-10)

7. INSTALL FRONT WHEEL

Torque: 103 N·m (1,050 kgf·cm, 76 ft·lbf)

8. DEPRESS BRAKE PEDAL SEVERAL TIMES

9. CHECK FRONT WHEEL ALIGNMENT (See page SA-5)

10. w/ ABS:
CHECK ABS SPEED SENSOR SIGNAL
(See page DI-201)

SA1KV-01

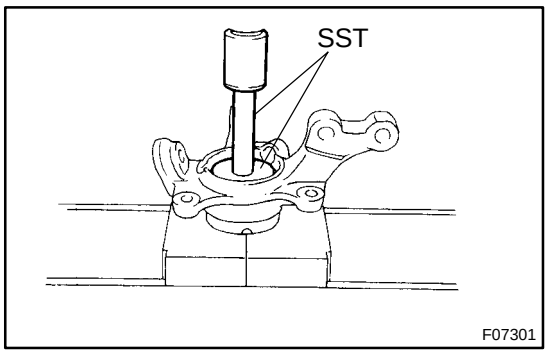

REASSEMBLY

1. INSTALL BEARING

Using SST and a press, install a new bearing to the steering knuckle.

SST 09950-60020 (09951-00680),
09950-70010 (09951-07150)

2. INSTALL DUST COVER

Using a torx wrench (T30), install the dust cover with the 3 bolts.

Torque: 8.3 N·m (85 kgf·cm, 74 in.·lbf)

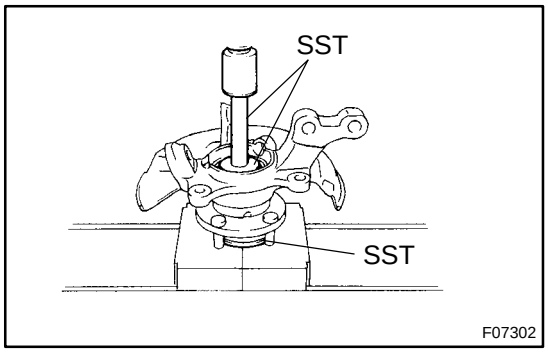

3. INSTALL AXLE HUB

Using SST and a press, install the axle hub.

SST 09608-32010, 09950-60020 (09951-00680),
09950-70010 (09951-07150)

NOTICE:

Be careful not to damage the bearing.

4. INSTALL SNAP RING

Using snap ring pliers, install a new snap ring.

SA1CL-03

REMOVAL

1. REMOVE FRONT WHEEL

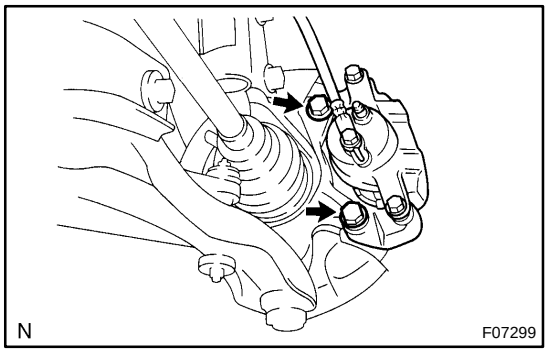

2. CHECK BEARING BACKLASH AND AXLE HUB DEVIATION

(a) Remove the 2 bolts, brake caliper and disc.

(b) Support the brake caliper securely.

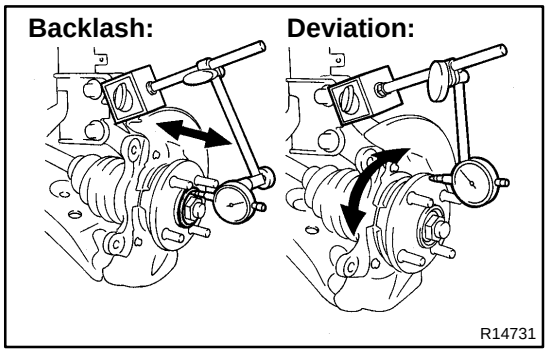

(c) Using a dial indicator, check the backlash near the center of the axle hub.

Maximum: 0.05 mm (0.0020 in.)

If the backlash exceeds the maximum, replace the bearing.

(d) Using a dial indicator, check the deviation at the surface of the axle hub outside the hub bolt.

Maximum: 0.05 mm (0.0020 in.)

If the deviation exceeds the maximum, replace the axle hub.

(e) Install the disc, brake caliper and 2 bolts.

Torque: 88 N·m (900 kgf·cm, 65 ft·lbf)

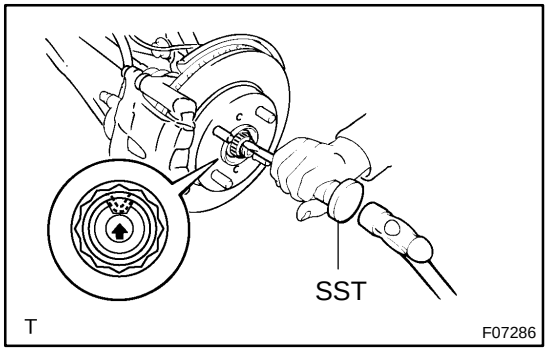

3. REMOVE DRIVE SHAFT LOCK NUT

(a) Using SST and a hammer, unstake the staked part of the lock nut.

SST 09930-00010

(b) While applying the brakes, remove the lock nut.

(c) Remove the 2 bolts, brake caliper and disc.

(d) Support the brake caliper securely.

4. w/ ABS:

DISCONNECT ABS SPEED SENSOR

Remove the bolt and disconnect the ABS speed sensor.

5. DISCONNECT STEERING KNUCKLE FROM LOWER SUSPENSION ARM

(a) Remove the clip and nut.

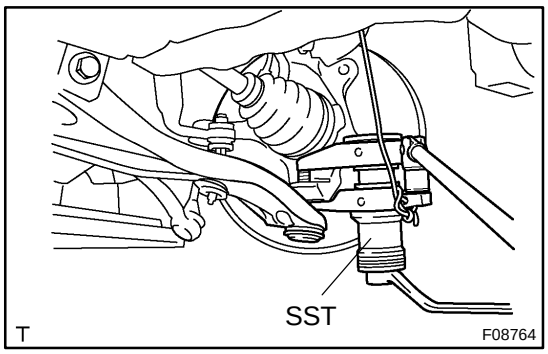

(b) Using SST, disconnect the steering knuckle.
SST 09628-0001 1 (09628-00030, 09628-00040, 09628-00050)

6. DISCONNECT TIE ROD END FROM STEERING KNUCKLE

(a) Remove the cotter pin and nut.

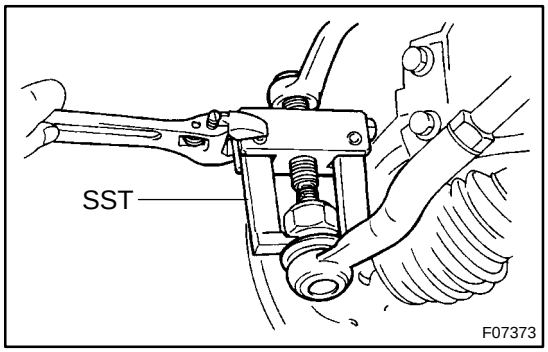

(b) Using SST, disconnect the tie rod end.
SST 09628-6201 1

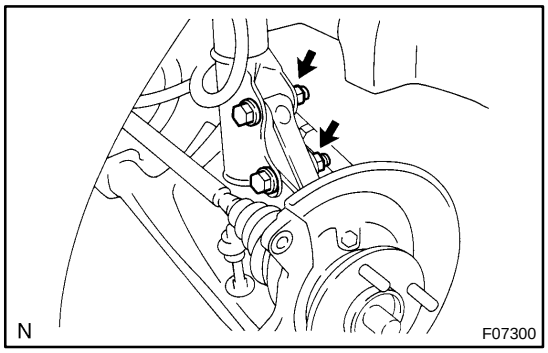

7. REMOVE STEERING KNUCKLE WITH AXLE HUB

Remove the 2 nuts, bolts and steering knuckle with the axle hub from the shock absorber.

NOTICE:

Be careful not to damage the boot and ABS speed sensor rotor.

FRONT DRIVE SHAFT

COMPONENTS

SA0CL-05

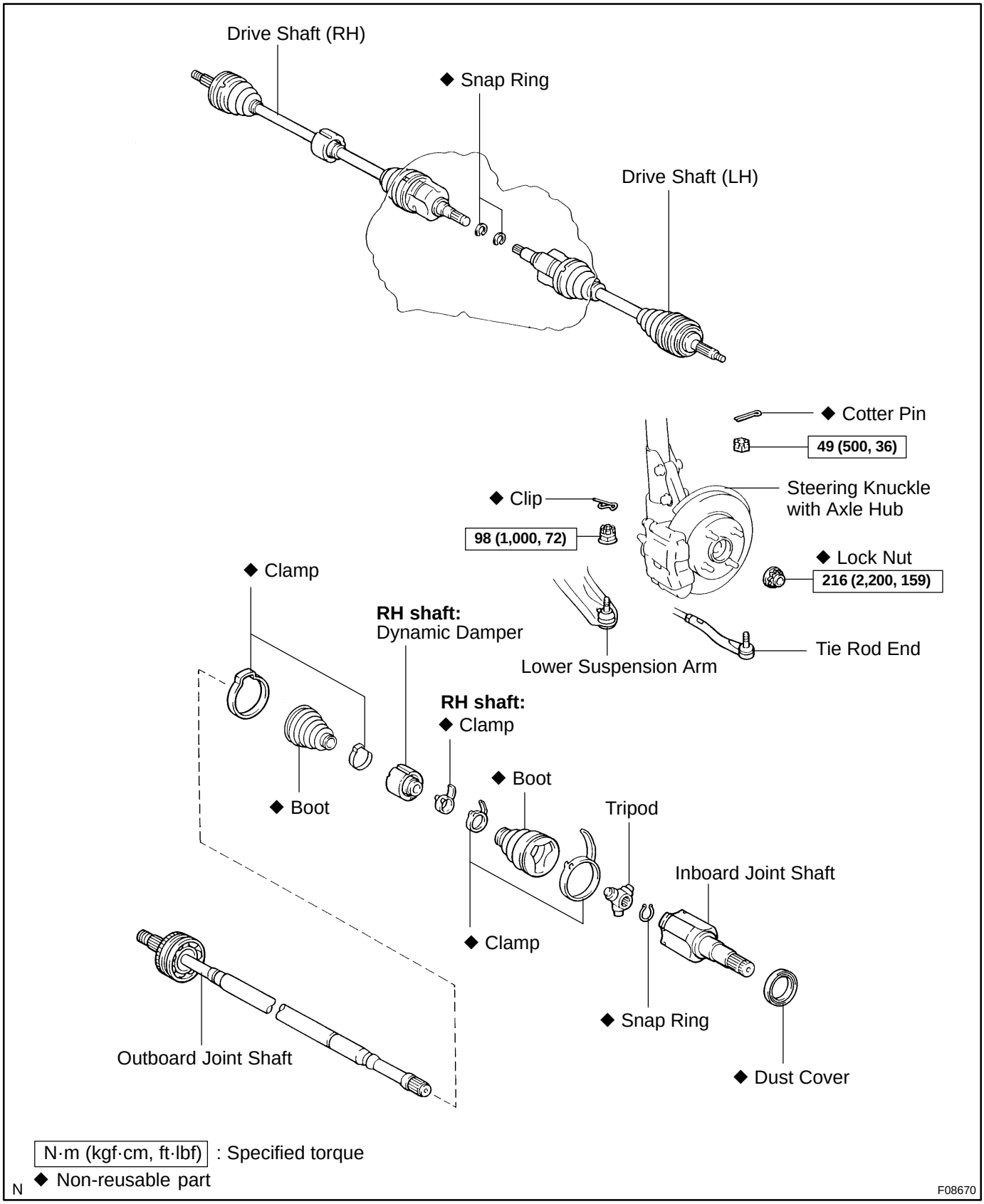

SA129-02

DISASSEMBLY

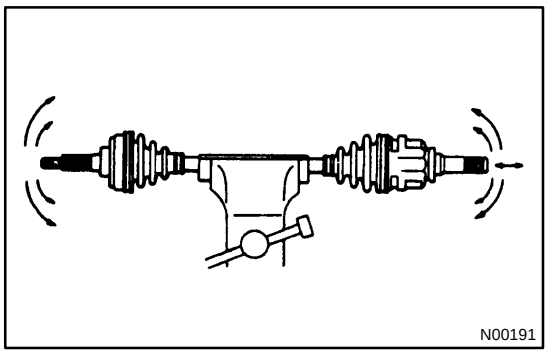
N00191

1. CHECK DRIVE SHAFT

(a) Check to see that there is no remarkable play in the outboard joint.

(b) Check to see that the inboard joint slides smoothly in the thrust direction.

(c) Check to see that there is no remarkable play in the radial direction of the inboard joint.

(d) Check the boots for damage.

2. REMOVE INBOARD JOINT SHAFT

(a) Using a screwdriver, disclamp the 2 inboard joint boot clamps.

(b) Slide the inboard joint boot toward the outboard joint.

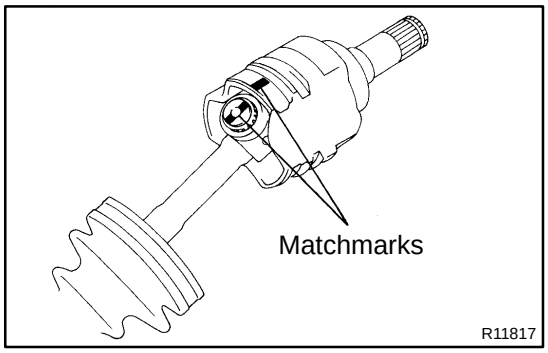

R11817

(c) Place matchmarks on the inboard joint shaft and tripod.

NOTICE:

Do not punch the marks.

(d) Remove the inboard joint shaft from the outboard joint shaft.

3. REMOVE TRIPOD

(a) Using a snap ring expander, remove the snap ring.

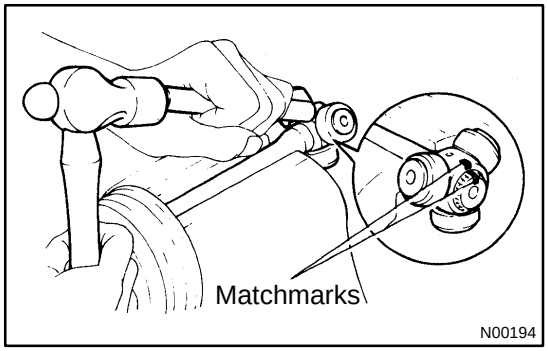

N00194

(b) Place matchmarks on the outboard joint shaft and tripod.

NOTICE:

Do not punch the marks.

(c) Using a brass bar and hammer, tap out the tripod from the outboard joint shaft.

NOTICE:

Do not tap the roller.

4. REMOVE INBOARD JOINT BOOT AND 2 CLAMPS

5. RH drive shaft:
REMOVE DYNAMIC DAMPER

(a) Using a screwdriver, remove the dynamic damper clamp.

(b) Remove the dynamic damper.

6. REMOVE OUTBOARD JOINT BOOT

(a) Using a side cutter, cut the 2 outboard joint boot clamps and remove them.

(b) Remove the outboard joint boot from the outboard joint shaft.

NOTICE:

Do not disassemble the outboard joint.

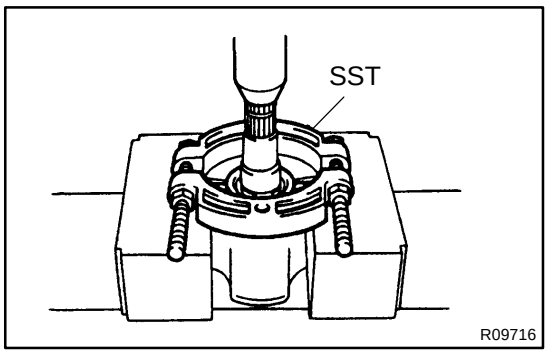

7. REMOVE DUST COVER

Using SST and a press, remove the dust cover from the inboard joint shaft.

SST 09950-00020

SA1KZ-02

INSTALLATION

1. INSTALL DRIVE SHAFT TO TRANSAXLE

(a) Install a new snap ring to the inboard joint shaft.

(b) Coat the gear oil to the inboard joint shaft and transaxle sliding surface.

(c) Set the snap ring with opening side facing downward.

(d) Using a brass bar and hammer, tap the snap ring and install the drive shaft.

NOTICE:

Be careful not to damage the dust cover and oil seal.

HINT:

Whether the inboard joint shaft is in contact with the pinion shaft or not can be known from the sound or feeling when driving it in.

(e) Check that there is 2 - 3 mm (0.08 - 0.12 in.) of play in the axial direction.

(f) Check that the drive shaft cannot be removed by hand.

2. CONNECT DRIVE SHAFT TO AXLE HUB

NOTICE:

Be careful not to damage the boot and ABS speed sensor rotor.

3. CONNECT TIE ROD END TO STEERING KNUCKLE

(a) Connect the tie rod end to the steering knuckle with the nut.

Torque: 49 N·m (500 kgf·cm, 36 ft·lbf)

(b) Install a new cotter pin.

If the holes for the cotter pin are not aligned, tighten the nut further up to 60°.

4. CONNECT STEERING KNUCKLE TO LOWER SUSPENSION ARM

(a) Connect the steering knuckle to the lower suspension arm with the nut.

Torque: 98 N·m (1,000 kgf·cm, 72 ft·lbf)

(b) Install a new clip.

If the holes for the clip are not aligned, tighten the nut further up to 60°.

5. INSTALL DRIVE SHAFT LOCK NUT

(a) While applying brakes, install a new lock nut.

Torque: 216 N·m (2,200 kgf·cm, 159 ft·lbf)

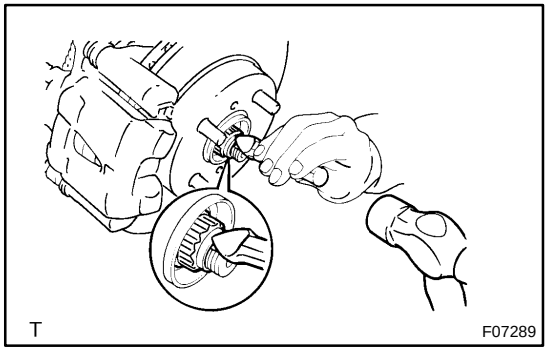

(b) Using a chisel and hammer, stake the lock nut.

6. FILL AND CHECK GEAR OIL (M/T) or ATF (A/T) (See page MX-8 or DI-149)

7. INSTALL FRONT WHEEL

Torque: 103 N·m (1,050 kgf·cm, 76 ft·lbf)

8. CHECK FRONT WHEEL ALIGNMENT (See page SA-5)

9. w/ ABS:

CHECK ABS SPEED SENSOR SIGNAL (See page DI-201)

SA1PM-01

REASSEMBLY

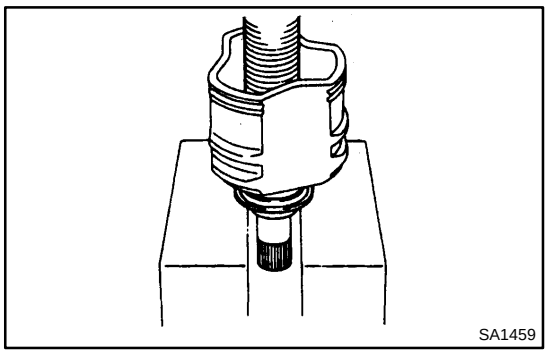

1. INSTALL DUST COVER

Using a press, install a new dust cover to the inboard joint shaft.

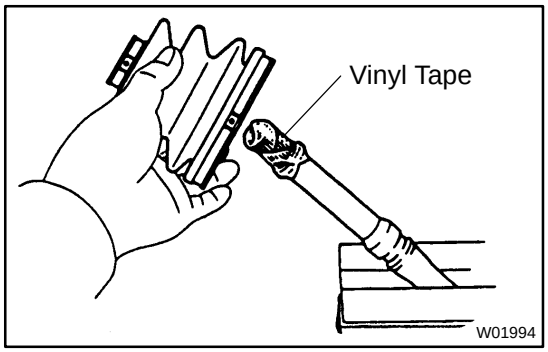

2. TEMPORARILY INSTALL BOOTS, CLAMPS AND DYNAMIC DAMPER (RH DRIVE SHAFT)

HINT:

Before installing the boots (and dynamic damper), wrap the spline of the outboard joint shaft with vinyl tape to prevent them from being damaged.

(a) Place 2 new clamps on a new outboard joint boot and install them to the outboard joint shaft.

(b) RH drive shaft:
Place a new clamp on the dynamic damper and install them to the outboard joint shaft.

(c) Place 2 new clamps on a new inboard joint boot and install them to the outboard joint shaft.

3. INSTALL TRIPOD

(a) Place the beveled side of the tripod axial spline toward the outboard joint.

(b) Align the matchmarks placed before removal.

(c) Using a brass bar and hammer, tap in the tripod to the outboard joint shaft.

NOTICE:

Do not tap the roller.

(d) Using a snap ring expander, install a new snap ring.

4. INSTALL BOOT TO OUTBOARD JOINT

Before assembling the boot, pack the outboard joint and boot with grease in the boot kit.

Grease capacity: (Color = Black)
155 - 170 g (5.5 - 6.0 oz.)

5. INSTALL INBOARD JOINT SHAFT TO OUTBOARD JOINT SHAFT

(a) Pack the inboard joint and boot with grease in the boot kit.
Grease capacity: (Color = Yellow ocher)
125 - 135 g (4.4 - 4.8 oz.)

(b) Align the matchmarks placed before removal.

(c) Install the inboard joint shaft to the outboard joint shaft.

(d) Temporarily install the boot to the inboard joint shaft.

6. ASSEMBLE BOOT CLAMPS TO BOTH BOOTS

(a) Make sure that the 2 boots are on the shaft grooves.

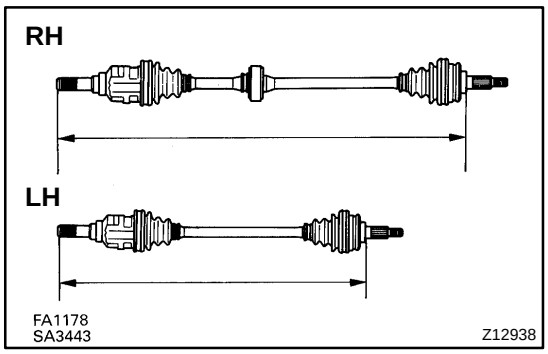

(b) Make sure that the 2 boots are not stretched or contracted when the drive shaft is at standard length.

Drive shaft standard length:

RH	813.3 ± 5.0 mm (32.020 ± 0.197 in.)
LH	574.3 ± 5.0 mm (22.610 ± 0.197 in.)

(c) Bend the band and lock the inboard joint boot clamps with a screwdriver.

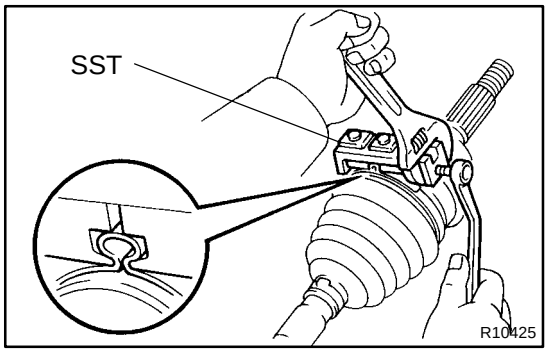

(d) Secure the 2 outboard joint boot clamps onto the boot.

(e) Place SST onto the outboard joint large boot clamp.
SST 09521-24010

(f) Tighten the SST so that the large clamp is pinched.

NOTICE:
Do not overtighten the SST.

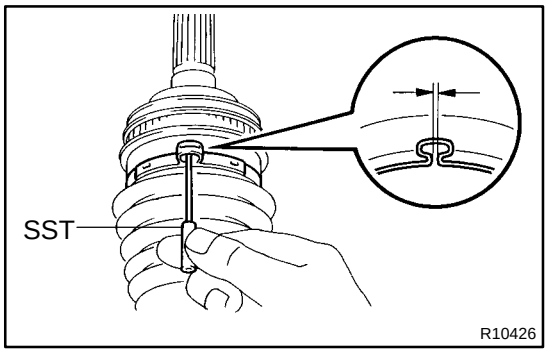

(g) Using SST, adjust the clearance of the large clamp.
SST 09240-00020
Clearance: 0.8 mm (0.031 in.) or less

(h) Employ the same manner to the outboard joint small boot clamp.

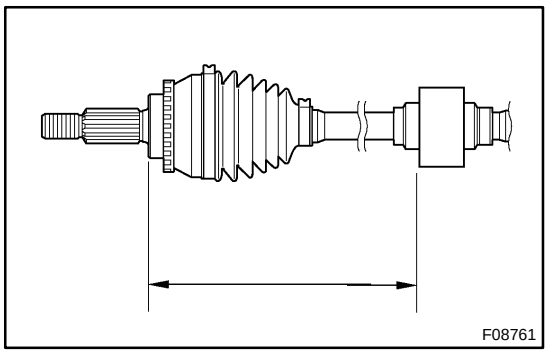

7. RH drive shaft:
ASSEMBLE DYNAMIC DAMPER CLAMP

(a) Set the distance, as described below.
Distance: 427.6 ± 2.0 mm (16.835 ± 0.079 in.)

(b) Bend the band and lock the dynamic damper clamp with a screwdriver.

8. CHECK DRIVE SHAFT (See page SA-20)

SA1PL-02

REMOVAL

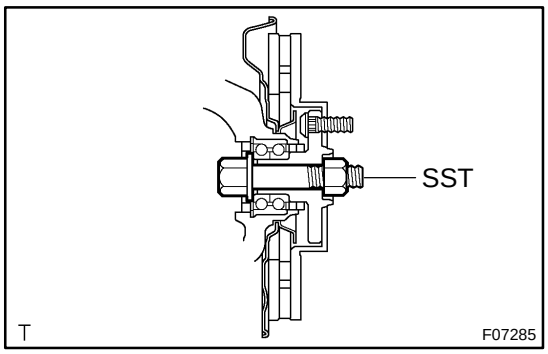

NOTICE:

- **The hub bearing could be damaged if it is subjected to the vehicle weight, such as when moving the vehicle with the drive shaft removed.**
  Therefore, if it is absolutely necessary to place the vehicle weight on the hub bearing, first support it with SST.
  SST 09608-16042 (09608-02021, 09608-02041)
- **After disconnecting the drive shaft from the axle hub, work carefully so as not to damage the ABS speed sensor rotor serration on the drive shaft.**

1. REMOVE FRONT WHEEL

2. DRAIN GEAR OIL (M/T) or ATF (A/T)

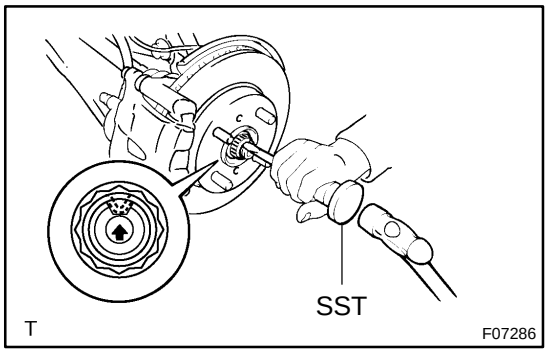

3. REMOVE DRIVE SHAFT LOCK NUT

(a) Using SST and a hammer, unstake the staked part of the lock nut.
SST 09930-00010

(b) While applying brakes, remove the lock nut.

4. DISCONNECT STEERING KNUCKLE FROM LOWER SUSPENSION ARM

(a) Remove the clip and nut.

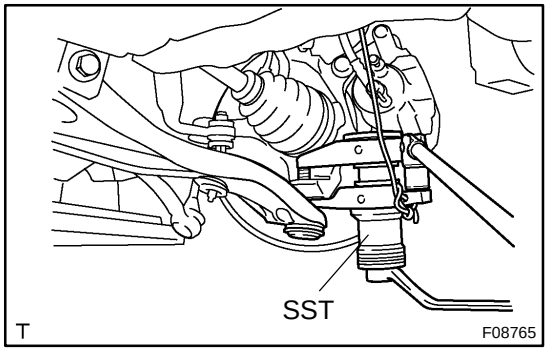

(b) Using SST, disconnect the steering knuckle.
SST 09628-0001 1 (09628-00030, 09628-00040, 09628-00050)

5. DISCONNECT TIE ROD END FROM STEERING KNUCKLE

(a) Remove the cotter pin and nut.

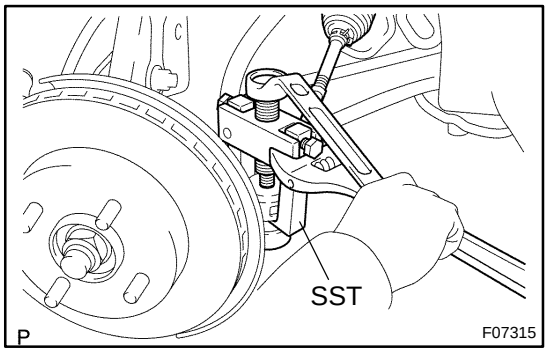

(b) Using SST, disconnect the tie rod end from the steering knuckle.
SST 09628-6201 1

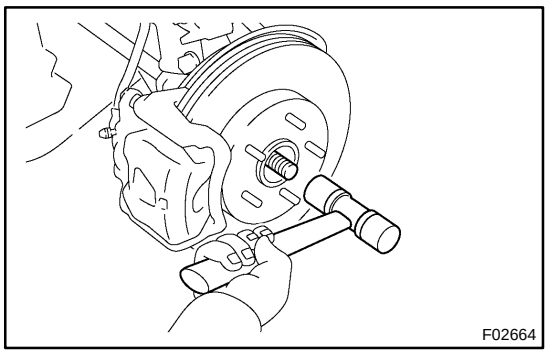

6. DISCONNECT DRIVE SHAFT FROM AXLE HUB

Using a plastic hammer, disconnect the drive shaft from the axle hub.

NOTICE:

Be careful not to damage the boot and ABS speed sensor rotor.

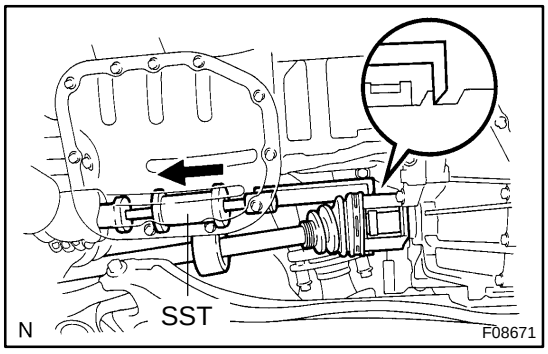

7. REMOVE DRIVE SHAFT

Using SST, remove the drive shaft from the transaxle.

SST 09520-01010, 09520-24010 (09520-32040)

NOTICE:

Be careful not to damage the dust cover and oil seal.

FRONT LOWER SUSPENSION ARM

SA1L1-02

COMPONENTS

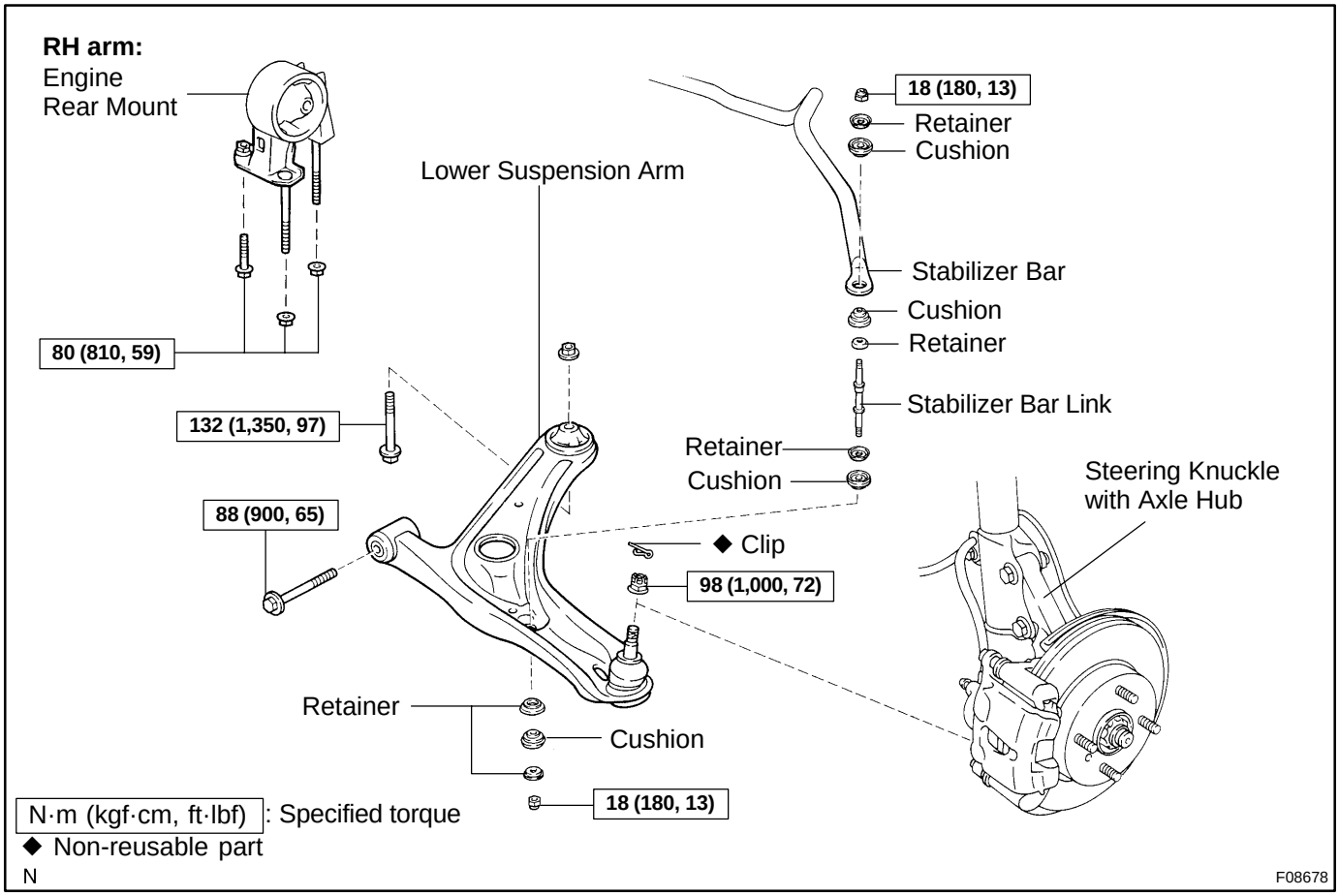

SA1L3-01

INSPECTION

1. INSPECT LOWER SUSPENSION ARM BALL JOINT BOOT FOR DAMAGE

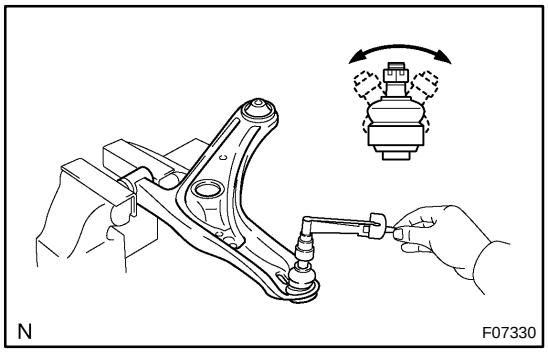

2. INSPECT LOWER SUSPENSION ARM BALL JOINT FOR ROTATION CONDITION

(a) As shown in the illustration, flip the ball joint stud back and forth 5 times, before installing the nut.

(b) Using a torque wrench, turn the nut continuously at a rate of 2 - 4 seconds per 1 turn and take the torque reading on the 5th turn.

Turning torque:
0.59 - 3.43 N·m (6 - 35 kgf·cm, 5.2 - 30 in.·lbf)

SA1PP-02

INSTALLATION

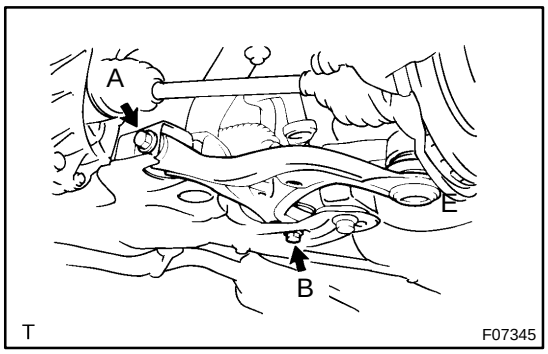

1. INSTALL LOWER SUSPENSION ARM

Install the lower suspension arm with the 2 bolts and nut.

Torque:
Bolt A: 88 N·m (900 kgf·cm, 65 ft·lbf)
Bolt B: 132 N·m (1,350 kgf·cm, 97 ft·lbf)

NOTICE:
Do not turn the nut.

HINT:
After stabilizing the suspension, torque the 2 bolts.

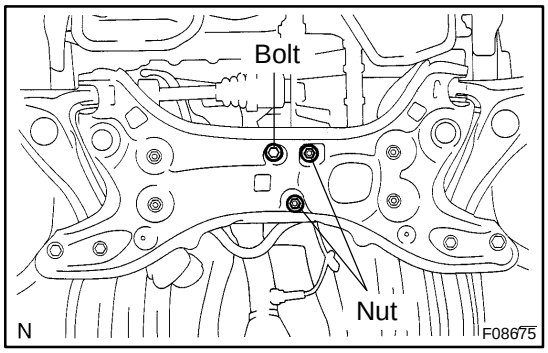

2. RH arm:
CONNECT ENGINE REAR MOUNT

Connect the engine rear mount with the bolt and 2 nuts.

Torque: 80 N·m (810 kgf·cm, 59 ft·lbf)

3. CONNECT LOWER SUSPENSION ARM TO STEERING KNUCKLE

(a) Connect the lower suspension arm to the steering knuckle with the nut.

Torque: 98 N·m (1,000 kgf·cm, 72 ft·lbf)

(b) Install a new clip.

If the holes for the clip are not aligned, tighten the nut further up to 60 °.

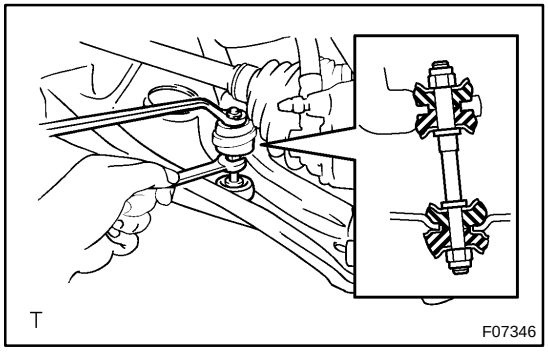

4. INSTALL STABILIZER BAR LINK

Install the stabilizer bar link, 4 cushions and 5 retainers with the 2 nuts.

Torque: 18 N·m (180 kgf·cm, 13 ft·lbf)

5. INSTALL FRONT WHEEL

Torque: 103 N·m (1,050 kgf·cm, 76 ft·lbf)

6. CHECK FRONT WHEEL ALIGNMENT (See page SA-5)

SA1PO-02

REMOVAL

1. REMOVE FRONT WHEEL

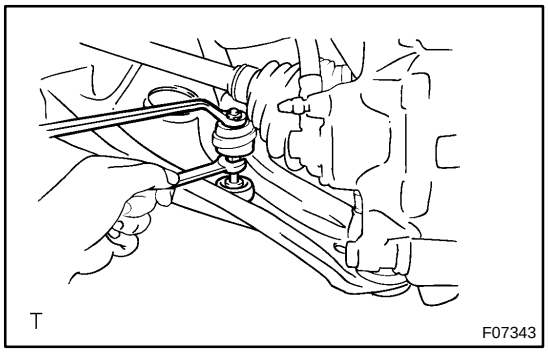

2. REMOVE STABILIZER BAR LINK

While holding the stabilizer bar link, remove the 2 nuts, 5 retainers, 4 cushions and the stabilizer bar link.

3. DISCONNECT LOWER SUSPENSION ARM FROM STEERING KNUCKLE

(a) Remove the clip and nut.

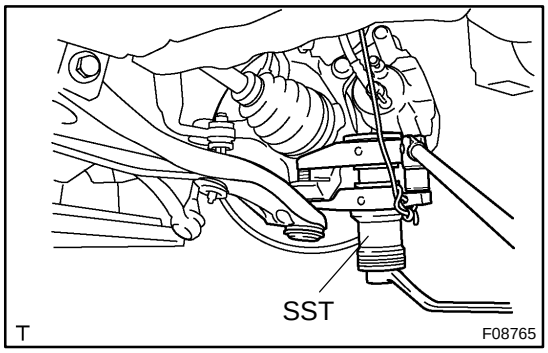

(b) Using SST, disconnect the lower suspension arm from the steering knuckle.

SST 09628-0001 1 (09628-00030, 09628-00040, 09628-00050)

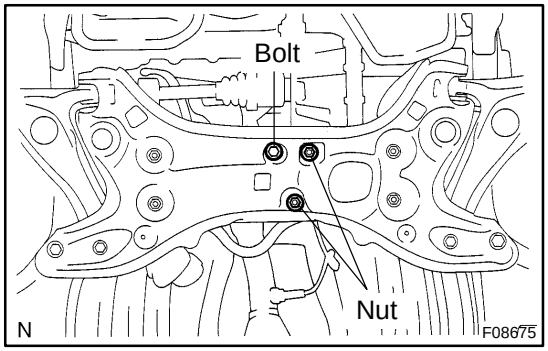

4. RH arm:
SLIGHTLY JACK UP ENGINE

(a) Remove the bolt and 2 nuts, and disconnect the engine rear mount.

(b) Using a transmission jack and wooden block, slightly jack up the engine.

NOTICE:

Do not jack up the engine at the oil pan.

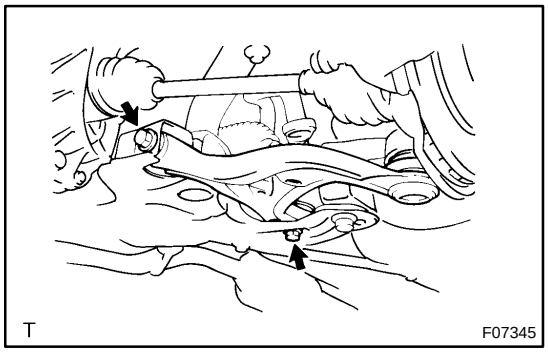

5. REMOVE LOWER SUSPENSION ARM

Remove the 2 bolts, nut and lower suspension arm.

NOTICE:

Do not turn the nut.

FRONT SHOCK ABSORBER

SA0CQ-08

COMPONENTS

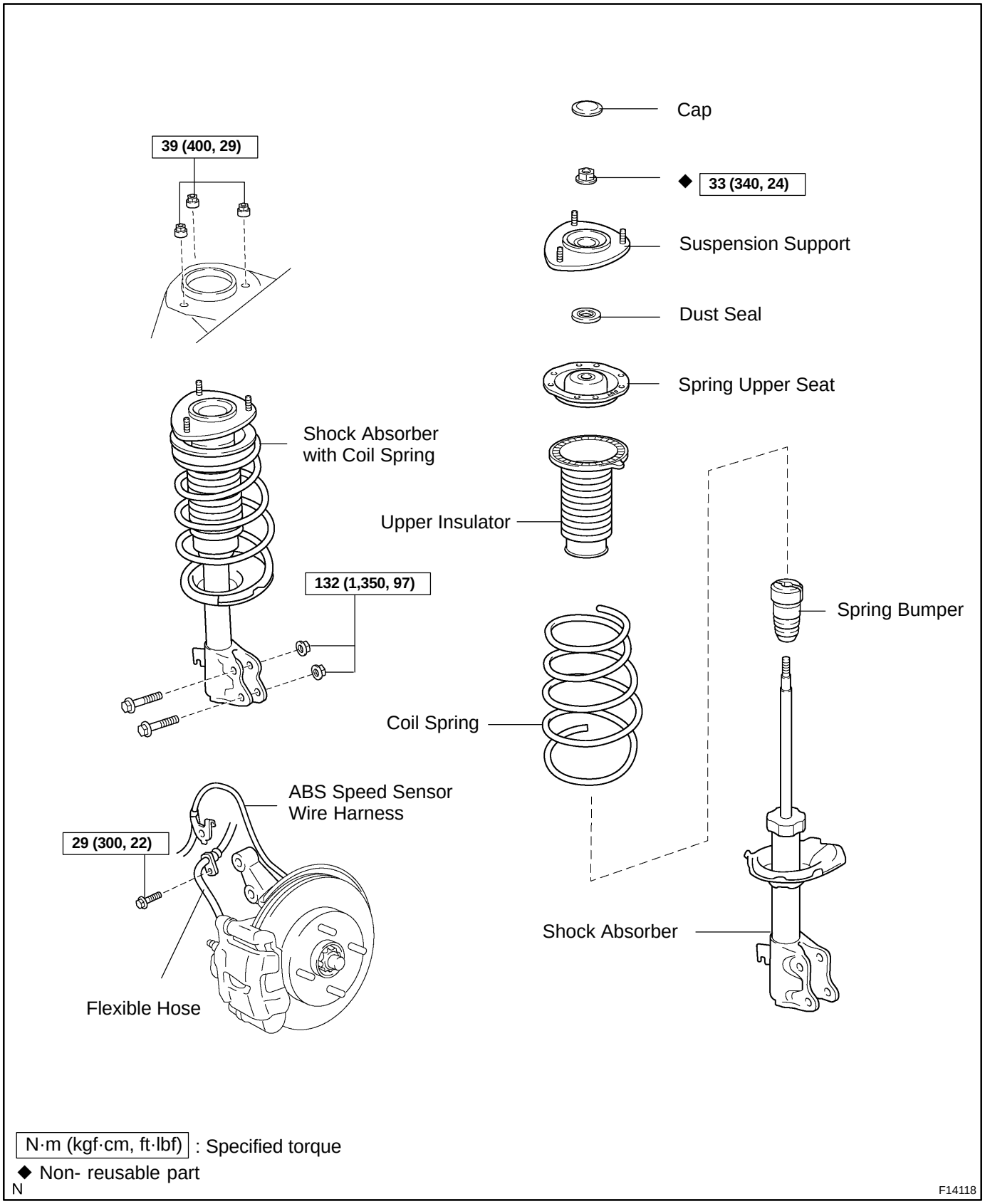

SA0CS-04

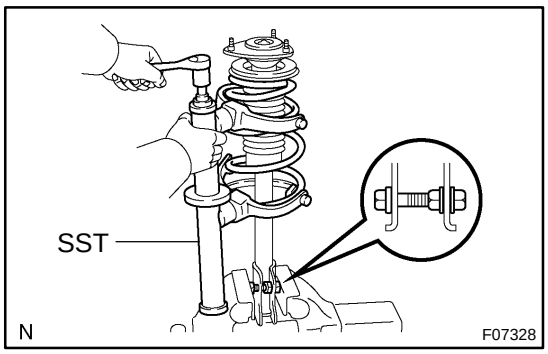

DISASSEMBLY

REMOVE COIL SPRING

(a) Install 2 nuts and a bolt to the bracket at the lower side of the shock absorber and secure it in a vise.

(b) Using SST, compress the coil spring.
SST 09727-30021 (09727-00010, 09727-00021, 09727-00031)

NOTICE:

Do not use an impact wrench. It will damage the SST.

(c) Remove the cap from the suspension support.

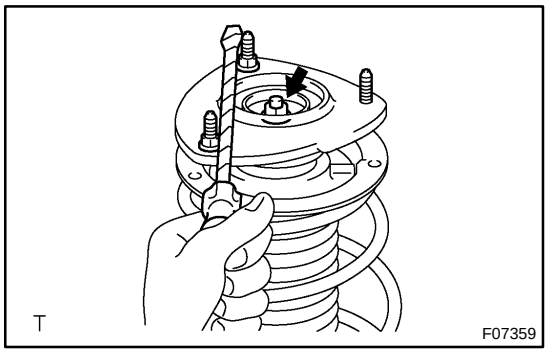

(d) Using 2 nuts and a screwdriver or an equivalent to hold, remove the center nut.

NOTICE:

Do not damage the suspension support stud bolts.

(e) Remove the suspension support, dust seal, spring upper seat, upper insulator, spring bumper and coil spring.

SA0L8-04

DISPOSAL

1. FULLY EXTEND SHOCK ABSORBER ROD

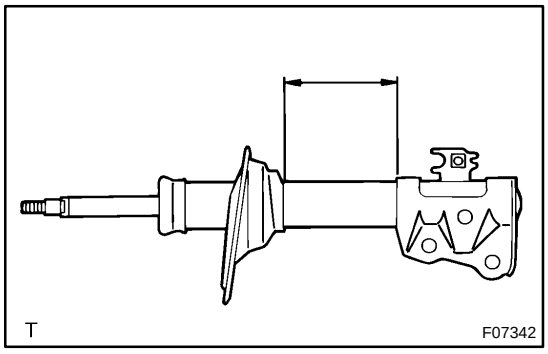

2. DRILL HOLE TO DISCHARGE GAS FROM CYLINDER

Using a drill, make a hole in the cylinder as shown in the illustration to discharge the gas inside.

CAUTION:

- **When drilling, chips may fly out, work carefully.**
- **The gas is colorless, odorless and non-poisonous.**

SA0CT-04

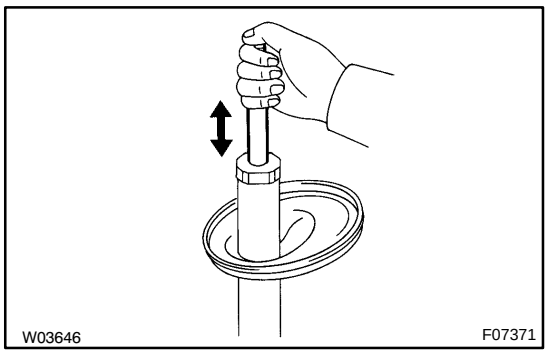

INSPECTION

INSPECT SHOCK ABSORBER

Compress and extend the shock absorber rod and check that there is no abnormal resistance or unusual sound during operation.

If there is any abnormality, replace the shock absorber with a new one.

NOTICE:

When disposing of the shock absorber, see DISPOSAL on page SA-29 .

SA1CS-04

INSTALLATION

1. INSTALL SHOCK ABSORBER WITH COIL SPRING

(a) Install the shock absorber with coil spring and 3 nuts.
Torque: 39 N·m (400 kgf·cm, 29 ft·lbf)

(b) Connect the shock absorber to the steering knuckle.

(c) Coat the threads of the 2 nuts with engine oil.

(d) Install the 2 bolts and nuts.
Torque: 132 N·m (1,350 kgf·cm, 97 ft·lbf)

2. CONNECT ABS SPEED SENSOR WIRE HARNESS CLAMP AND FLEXIBLE HOSE TO SHOCK ABSORBER
Torque: 29 N·m (300 kgf·cm, 22 ft·lbf)

3. INSTALL FRONT WHEEL
Torque: 103 N·m (1,050 kgf·cm, 76 ft·lbf)

4. CHECK FRONT WHEEL ALIGNMENT (See page SA-5)

SA1CR-02

REASSEMBLY

1. INSTALL SPRING BUMPER TO PISTON ROD

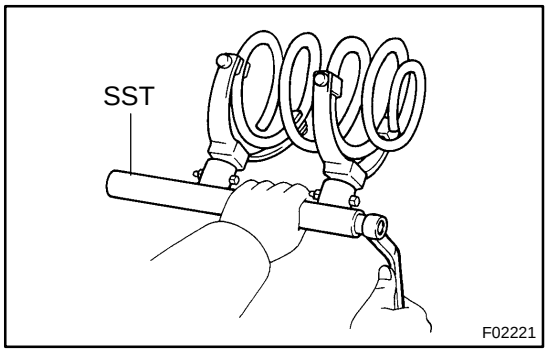

2. INSTALL COIL SPRING

(a) Using SST, compress the coil spring.
SST 09727-30021 (09727-00010, 09727-00021, 09727-00031)

NOTICE:
Do not use an impact wrench. It will damage the SST.

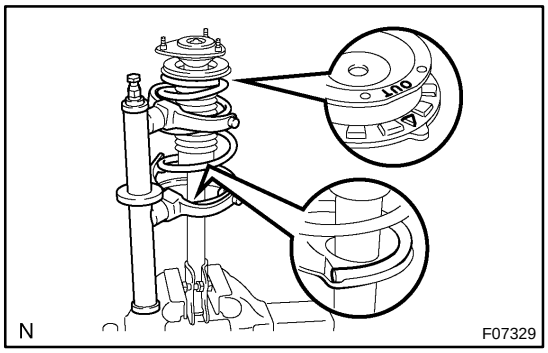

(b) Install the coil spring to the shock absorber.
HINT:
Fit the lower end of the coil spring into the gap of the spring lower seat.
(c) Install the upper insulator with the "⍁" mark facing to the outside of the vehicle.
(d) Install the spring upper seat with the "OUT" mark facing to the outside of the vehicle.
(e) Install the dust seal and suspension support.

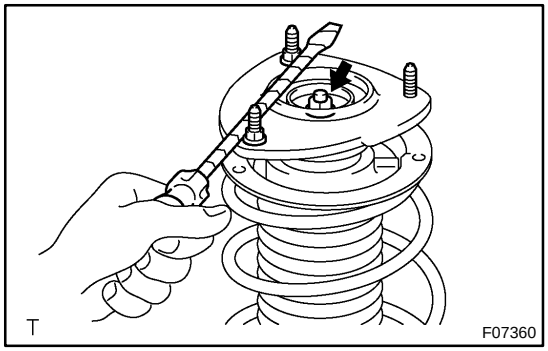

(f) Using 2 nuts and a screwdriver or an equivalent to hold, install a new center nut.
Torque: 33 N·m (340 kgf·cm, 24 ft·lbf)

NOTICE:
Do not damage the suspension support stud bolts.

(g) Remove the SST.
SST 09727-30021 (09727-00010, 09727-00021, 09727-00031)

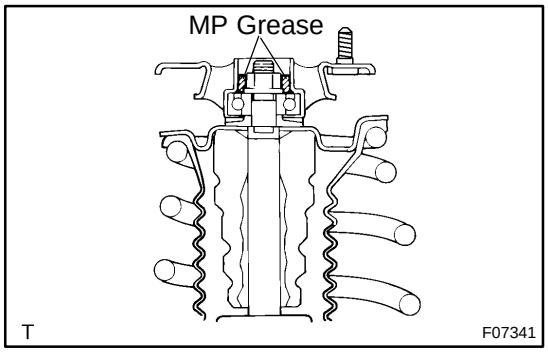

(h) Apply MP grease into the suspension support.
(i) Install the cap.

SA1L0-04

REMOVAL

NOTICE:

Face the front wheel straight ahead to prevent damage to the steering gear.

1. REMOVE FRONT WHEEL

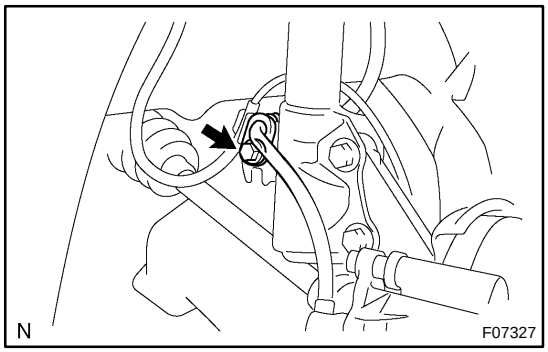

2. DISCONNECT FLEXIBLE HOSE AND ABS SPEED SENSOR WIRE HARNESS CLAMP

Remove the bolt and disconnect the flexible hose and ABS speed sensor wire harness clamp from the shock absorber bracket.

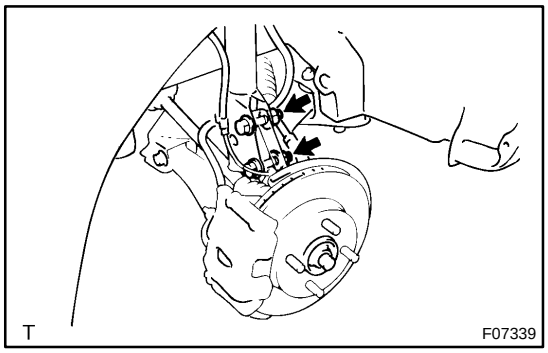

3. REMOVE SHOCK ABSORBER WITH COIL SPRING

(a) Remove the 2 nuts and bolts, and disconnect the shock absorber from the steering knuckle.

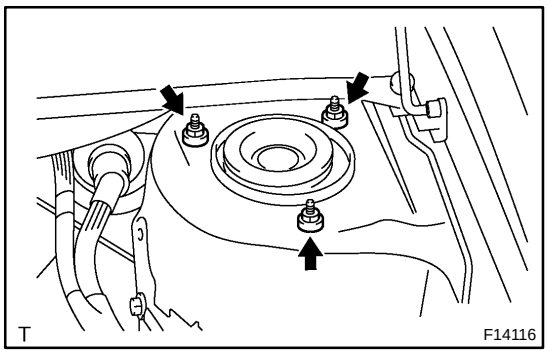

(b) Remove the 3 nuts and shock absorber with the coil spring.

FRONT STABILIZER BAR

COMPONENTS

SA1ER-03

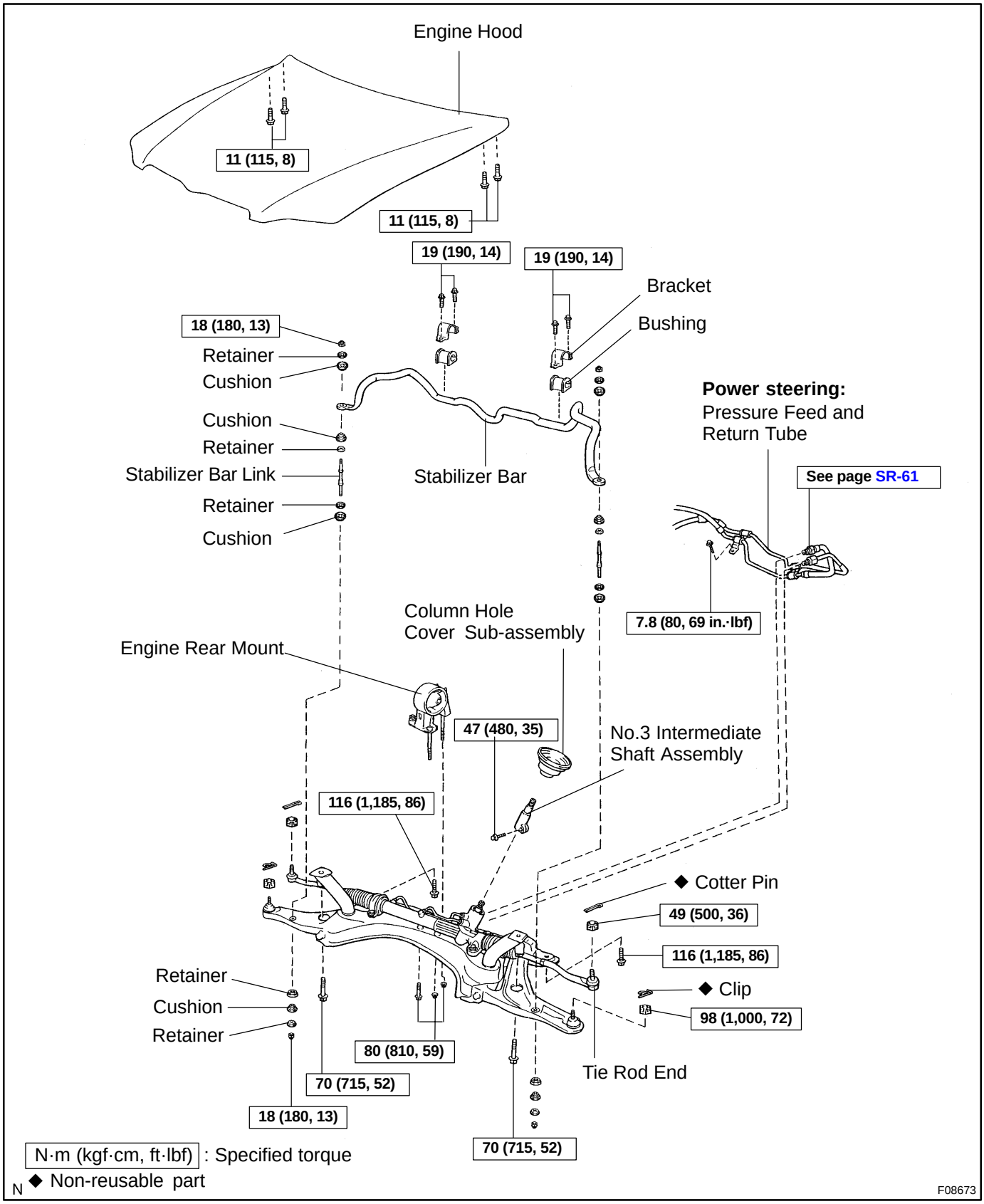

SA1PR-01

INSTALLATION

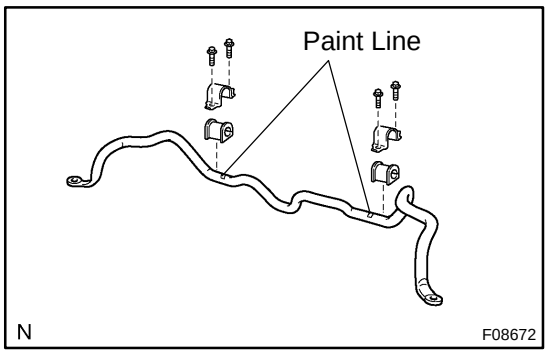

1. INSTALL STABILIZER BAR

Install the stabilizer bar, 2 bushings, brackets and 4 bolts.

Torque: 19 N·m (190 kgf·cm, 14 ft·lbf)

HINT:

Install the bushings to the outside of the each paint line.

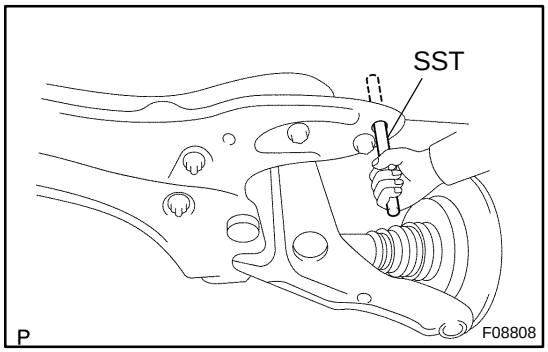

2. INSTALL SUSPENSION MEMBER

(a) Using SST, align the holes of the suspension member and body.

SST 09670-00010

(b) Employ the same manner described above to the other side.

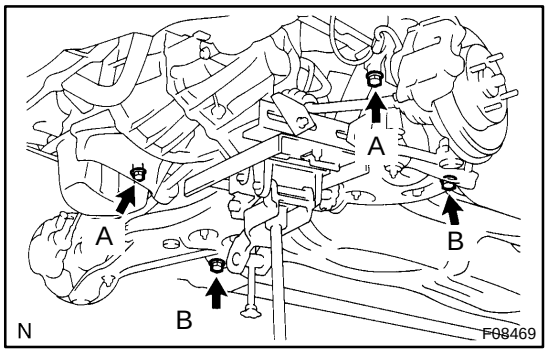

(c) Install the suspension member with the 4 bolts.

Torque:

Bolt A: 70 N·m (715 kgf·cm, 52 ft·lbf)

Bolt B: 116 N·m (1,185 kgf·cm, 86 ft·lbf)

3. Power steering:

CONNECT TUBE CLAMP

Connect the tube clamp with the bolt.

Torque: 7.8 N·m (80 kgf·cm, 69 in.·lbf)

4. Power steering:

CONNECT PRESSURE FEED AND RETURN TUBES (See page SR-61)

5. CONNECT SLIDING YOKE (See page SR-20)

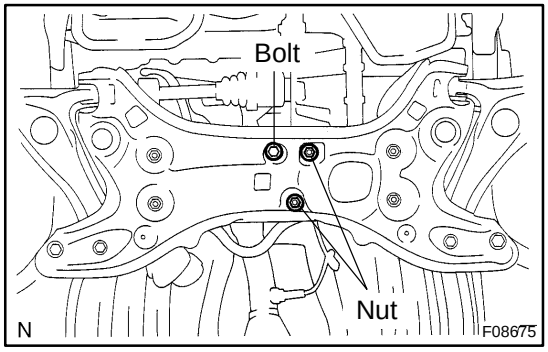

6. CONNECT ENGINE REAR MOUNT

Connect the engine rear mount with the bolt and 2 nuts.

Torque: 80 N·m (810 kgf·cm, 59 ft·lbf)

7. DISENGAGE ENGINE SLING DEVICE

8. INSTALL ENGINE HOOD (See page BO-6)

9. CONNECT LOWER SUSPENSION ARMS TO STEERING KNUCKLES

(a) Connect the lower suspension arm to the steering knuckle with the nut.

Torque: 98 N·m (1,000 kgf·cm, 72 ft·lbf)

(b) Install a new clip.

If the holes for the clip are not aligned, tighten the nut further up to 60°.

(c) Employ the same manner described above to the other side.

10. CONNECT TIE ROD ENDS TO STEERING KNUCKLES

(a) Connect the tie rod end to the steering knuckle with the nut.

Torque: 49 N·m (500 kgf·cm, 36 ft·lbf)

(b) Install a new cotter pin.

If the holes for the cotter pin are not aligned, tighten the nut further up to 60°.

(c) Employ the same manner described above to the other side.

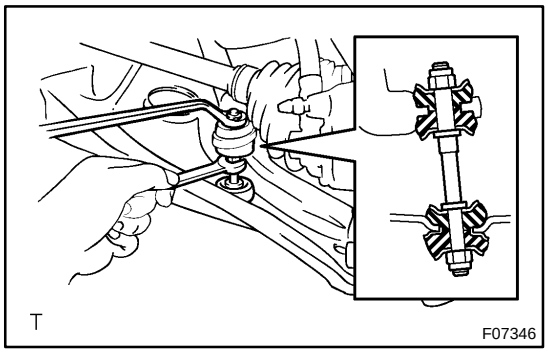

11. INSTALL STABILIZER BAR LINKS

(a) Install the stabilizer bar link, 4 cushions and 5 retainers with the 2 nuts.

Torque: 18 N·m (180 kgf·cm, 13 ft·lbf)

(b) Employ the same manner described above to the other side.

12. INSTALL FRONT WHEELS

Torque: 103 N·m (1,050 kgf·cm, 76 ft·lbf)

SA1PQ-02

REMOVAL

1. REMOVE FRONT WHEELS

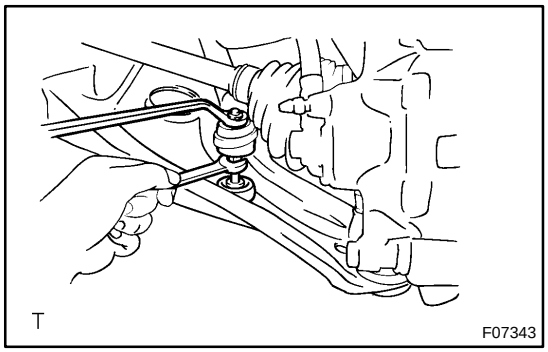

2. REMOVE STABILIZER BAR LINKS

(a) While holding the stabilizer bar link, remove the 2 nuts, 5 retainers, 4 cushions and the stabilizer bar link.

(b) Employ the same manner described above to the other side.

3. DISCONNECT TIE ROD ENDS FROM STEERING KNUCKLES

(a) Remove the cotter pin and nut.

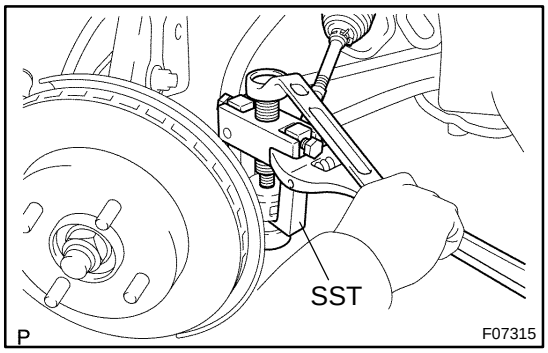

(b) Using SST, disconnect the tie rod end from the steering knuckle.

SST 09628-6201 1

(c) Employ the same manner described above to the other side.

4. DISCONNECT LOWER SUSPENSION ARMS FROM STEERING KNUCKLES

(a) Remove the clip and nut.

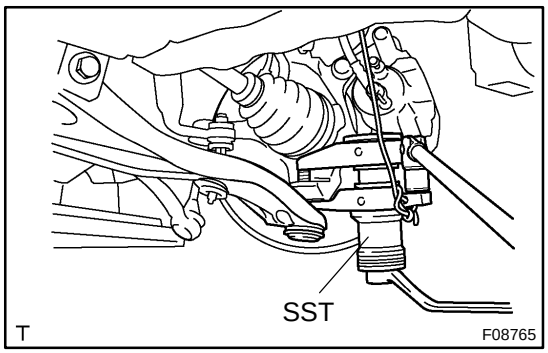

(b) Using SST, disconnect the steering knuckle.

SST 09628-0001 1 (09628-00030, 09628-00040, 09628-00050)

(c) Employ the same manner described above to the other side.

5. REMOVE ENGINE HOOD (See page BO-6)

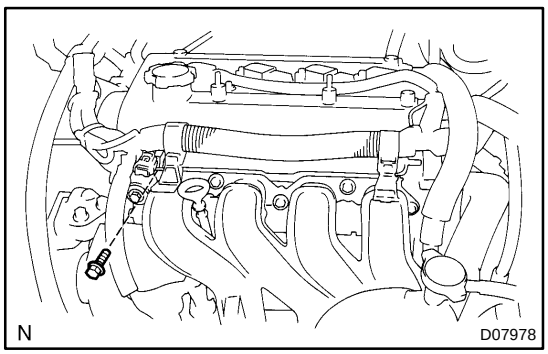

6. ATTACH ENGINE SLING DEVICE TO ENGINE HANGERS

(a) Remove the bolt.

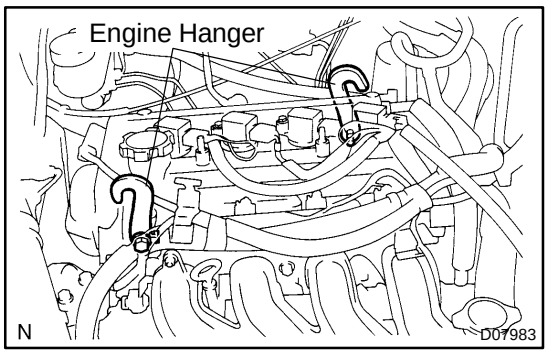

(b) Install the 2 No. 1 engine hangers with the bolts in the correct direction.

Parts No.:
No. 1 engine hanger: 12281-21010
Bolt: 91511-60818
Torque: 40 N·m (400 kgf·cm, 29 ft·lbf)

(c) Attach the engine chain hoist to the engine hangers.

CAUTION:
Do not attempt to hang the engine by hooking the chain to any other part.

7. DISCONNECT ENGINE REAR MOUNT

Remove the bolt and 2 nuts, and disconnect the engine rear mount.

8. DISCONNECT SLIDING YOKE (See page SR-13)

9. Power steering:
DISCONNECT PRESSURE FEED AND RETURN TUBES (See page SR-48)

10. Power steering:
DISCONNECT TUBE CLAMP

Remove the bolt and disconnect the tube clamp.

11. LOWER SUSPENSION MEMBER

(a) Support the suspension member with a transmission jack.

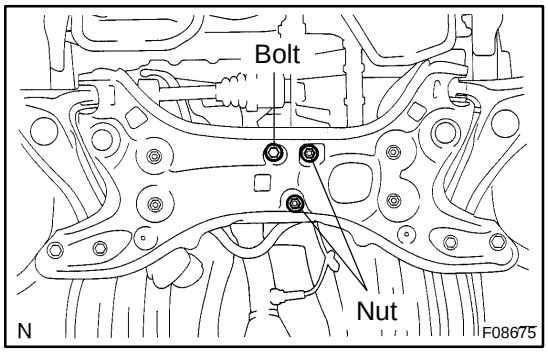

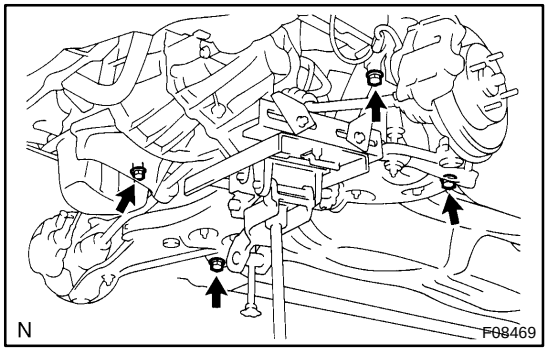

(b) Remove the 4 bolts and lower the suspension member.

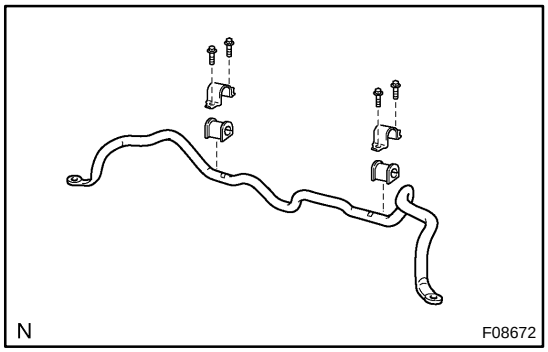

12. REMOVE STABILIZER BAR

Remove the 4 bolts, 2 brackets, bushings and stabilizer bar.

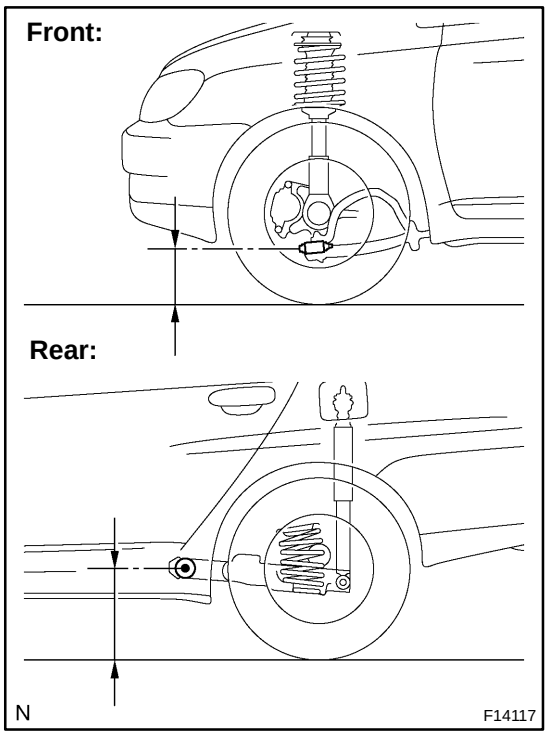

FRONT WHEEL ALIGNMENT

SA1CK-13

INSPECTION

1. MEASURE VEHICLE HEIGHT

Vehicle height:

Tire size	Front*1 mm (in.)	Rear*2 mm (in.)
P175/65R14	187 (7.36)	264 10.39)

*1: Front measuring point

Measure the distance from the ground to the head center of the front side lower suspension arm mounting bolt.

*2: Rear measuring point

Measure the distance from the ground to the center of the rear axle beam mounting bolt.

NOTICE:

Before inspecting the wheel alignment, adjust the vehicle height to the specified value.

If the vehicle height is not the specified value, try to adjust it by pushing down on or lifting the body.

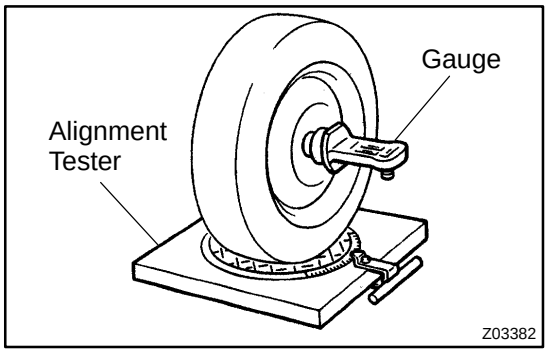

2. INSTALL CAMBER-CASTER-KINGPIN GAUGE OR POSITION VEHICLE ON WHEEL ALIGNMENT TESTER

Follow the specific instructions of the equipment manufacturer.

3. INSPECT CAMBER, CASTER AND STEERING AXIS INCLINATION

Camber, caster and steering axis inclination:

Camber	-0 ˚37' ± 45' (-0.62˚ ± 0.75˚)
Right-left error	45' (0.75˚) or less
Caster	
Manual steering	0˚48' ± 45' (0.80˚ ± 0.75˚)
Power steering	1˚46' ± 45' (1.77˚ ± 0.75˚)
Right-left error	45' (0.75˚) or less
Steering axis inclination	10˚08' ± 45' (10.13˚ ± 0.75˚)
Right-left error	45' (0.75˚) or less

If the caster and steering axis inclination are not within the specified values, after the camber has been correctly adjusted, recheck the suspension parts for damaged and/or worn out parts.

4. ADJUST CAMBER

NOTICE:

After the camber has been adjusted, inspect the toe-in.

(a) Remove the front wheel.

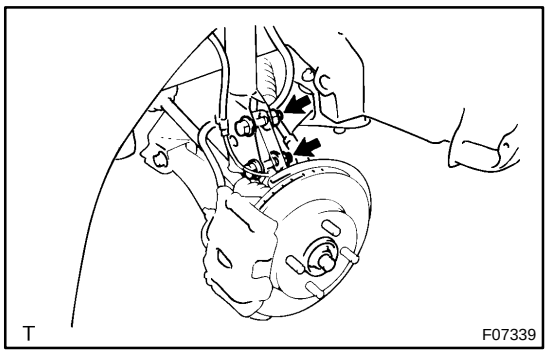

(b) Remove the 2 nuts on the lower side of the shock absorber.

If reusing the bolts and/or nuts, coat the threads of nuts with engine oil.

(c) Clean the installation surfaces of the shock absorber and the steering knuckle.

(d) Temporarily install the 2 nuts.

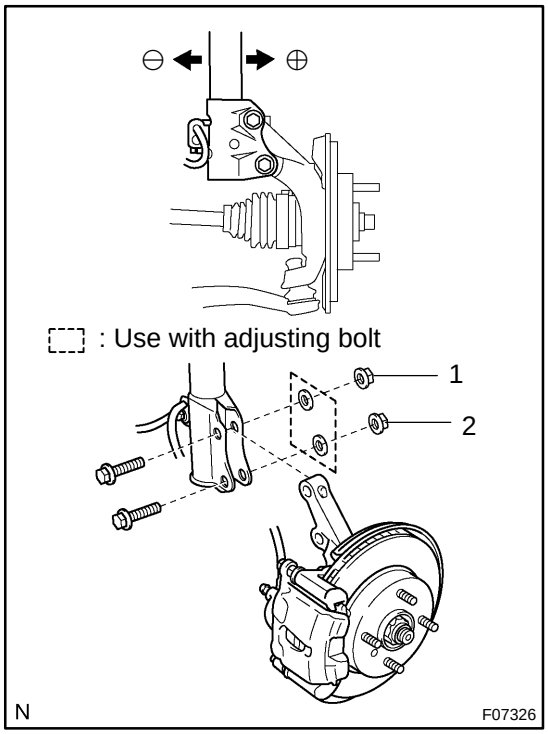

(e) Adjust the camber by pushing or pulling the lower side of the shock absorber in the direction in which the camber adjustment is required.

(f) Tighten the nuts.

Torque: 132 N·m (1,350 kgf·cm, 97 ft·lbf)

(g) Install the front wheel.

Torque: 103 N·m (1,050 kgf·cm, 76 ft·lbf)

(h) Check the camber.

HINT:

- Try to adjust the camber to the center of the specified value.
- Adjusting value for the set bolts is 6' - 30' (0.1° - 0.5°).

If the camber is not within the specified value, using the following table, estimate how much additional camber adjustment will be required, and select the camber adjusting bolt.

NOTICE:

Tighten the adjusting bolt with a washer and a new nut.

Bolt / Adjusting Value	Set Bolt		Adjusting Bolt			
	90105-14140		90105-14146		90105-14147	
			1 Dot		2 Dots	
	11		•11		•11•	
	1	2	1	2	1	2
15'	●			●		
30'	●					●
45'			●			●
1°00'			●		●	●

N F07372

(i) Do the steps mentioned above again. At step (b), replace 1 or 2 selected bolts.

HINT:

When replacing the 2 bolts, replace 1 bolt for each time.

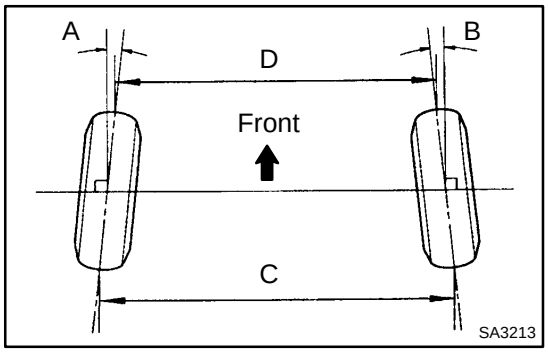

5. INSPECT TOE-IN

Toe-in:

Toe-in (total)	A + B: 0° ± 12' (0° ± 0.2°) C - D: 0 ± 2 mm (0 ± 0.08 in.)

If the toe-in is not within the specified value, adjust it at the rack ends.

6. ADJUST TOE-IN

(a) Remove the rack boot set clips.

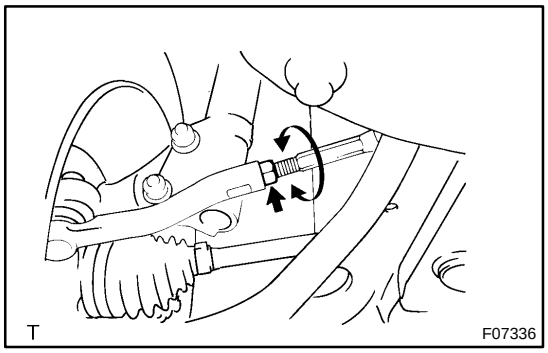

(b) Loosen the tie rod end lock nuts.

(c) Turn the right and left rack ends by an equal amount to adjust the toe-in.

HINT:

Try to adjust the toe-in to the center of the specified value.

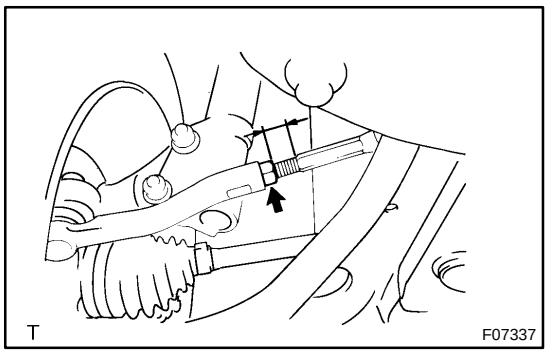

(d) Make sure that the lengths of the right and left rack ends are the same.

Rack end length difference: 1.5 mm (0.059 in.) or less

(e) Torque the tie rod end lock nuts.

Torque: 47 N·m (480 kgf·cm, 35 ft·lbf)

(f) Place the boots on the seats and install the clips.

HINT:

Make sure that the boots are not twisted.

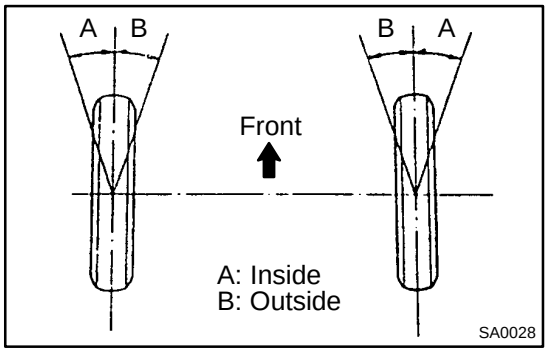

7. INSPECT WHEEL ANGLE

Turn the steering wheel fully and measure the turning angle.

Wheel turning angle:

	Manual steering	Power steering
Inside wheel	36°56' ± 2° (36.94° ± 2°)	36°56' ± 2° (36.93° ± 2°)
Outside wheel: Reference	32°07' (32.12°)	32°17' (32.28°)

If the right and left inside wheel angles differ from the specified value, check the right and left rack end lengths.

FRONT WHEEL HUB BOLT

SA1CN-02

REPLACEMENT

1. REMOVE FRONT WHEEL

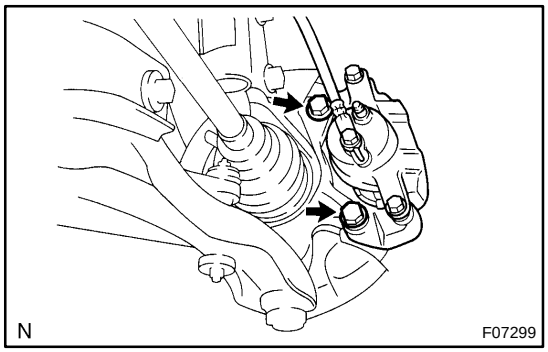

2. REMOVE BRAKE CALIPER AND DISC

(a) Remove the 2 bolts, brake caliper and disc.

(b) Support the brake caliper securely.

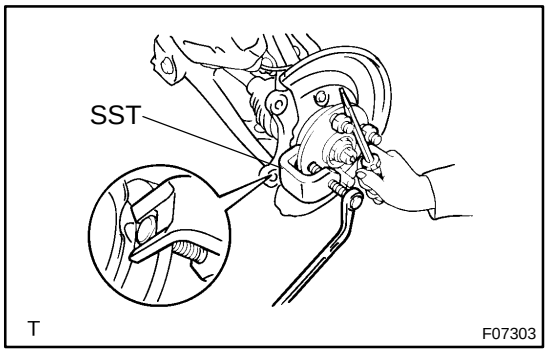

3. REMOVE HUB BOLT

Using SST, 2 nuts and a screwdriver or an equivalent, remove the hub bolt.

SST 09628-1001 1

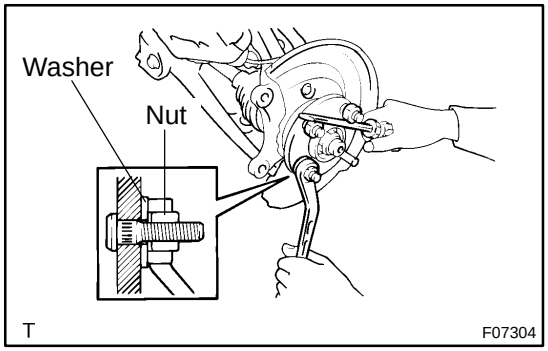

4. INSTALL HUB BOLT

(a) Install a washer and nut to a new hub bolt as shown in the illustration.

(b) Using a screwdriver or an equivalent to hold, install the hub bolt by torquing the nut.

(c) Remove the 3 nuts and washer.

5. INSTALL DISC AND BRAKE CALIPER

Install the disc, brake caliper and 2 bolts.

Torque: 88 N·m (900 kgf·cm, 65 ft·lbf)

6. INSTALL FRONT WHEEL

Torque: 103 N·m (1,050 kgf·cm, 76 ft·lbf)

REAR AXLE BEAM

COMPONENTS

SA0QW-03

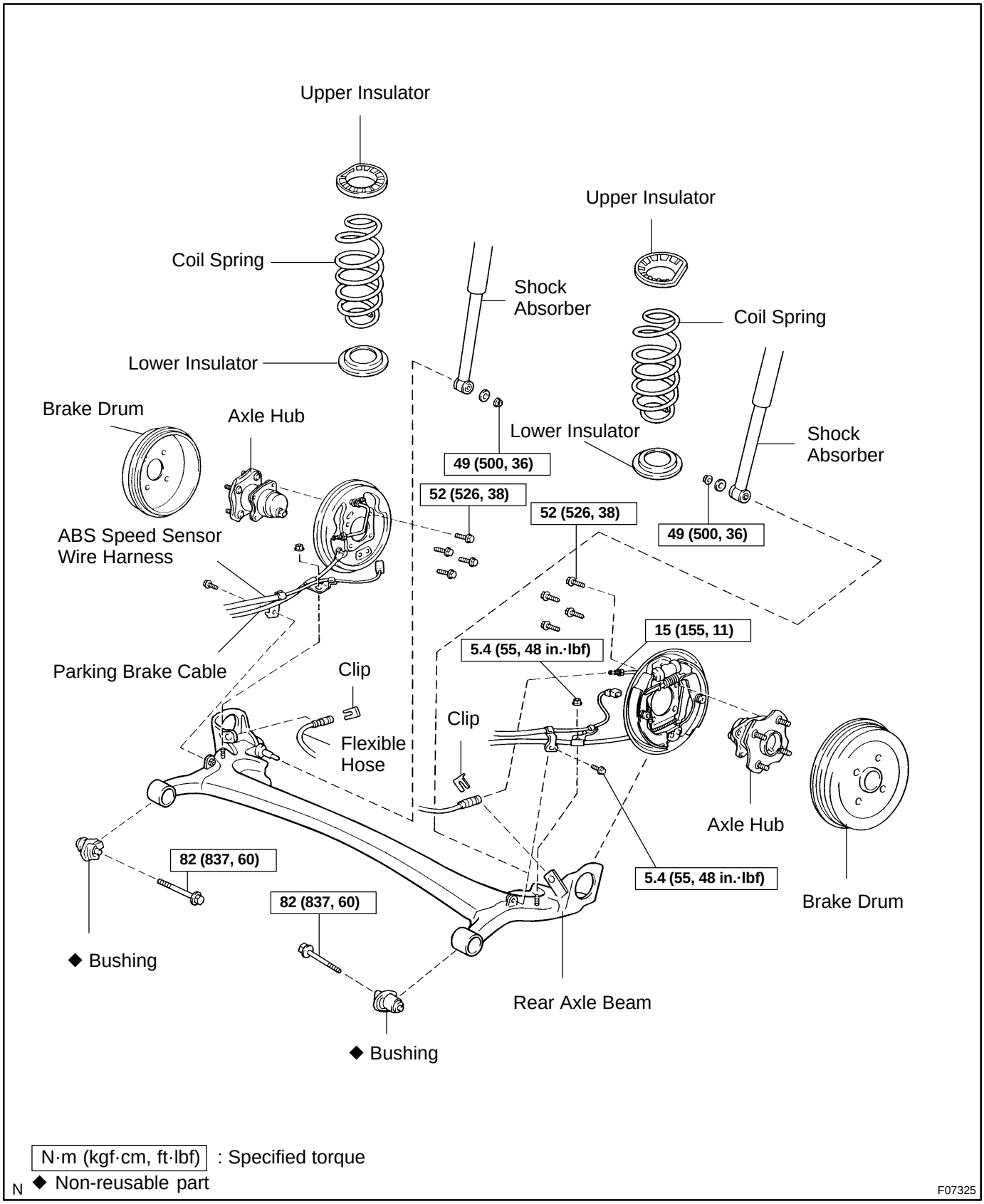

N·m (kgf·cm, ft·lbf) : Specified torque

N ◆ Non-reusable part

F07325

SA1LD-01

INSTALLATION

1. INSTALL REAR AXLE BEAM
Torque: 82 N·m (837 kgf·cm, 60 ft·lbf)

HINT:

After adjusting the vehicle height by pushing down or lifting up the body, torque the 2 bolts.

2. INSTALL REAR COIL SPRINGS (See page SA-53)

3. INSTALL AXLE HUB ASSEMBLES (See page SA-45)

4. CONNECT ABS SPEED SENSOR WIRE HARNESS AND PARKING BRAKE CABLE CLAMPS
Torque: 5.4 N·m (55 kgf·cm, 48 in.·lbf)

5. CONNECT BRAKE LINES

(a) Install the clip.

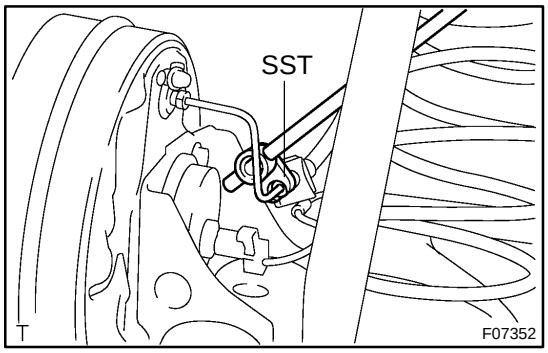

(b) Using SST, connect the brake line to the flexible hose.
SST 09023-00100
Torque: 15 N·m (155 kgf·cm, 11 ft·lbf)

(c) Employ the same manner described above to the other side.

6. BLEED BRAKE SYSTEM (See page BR-4)

7. INSTALL REAR WHEELS
Torque: 103 N·m (1,050 kgf·cm, 76 ft·lbf)

8. CHECK ABS SPEED SENSOR SIGNAL (See page DI-201)

SA1LC-01

REMOVAL

1. REMOVE REAR WHEELS

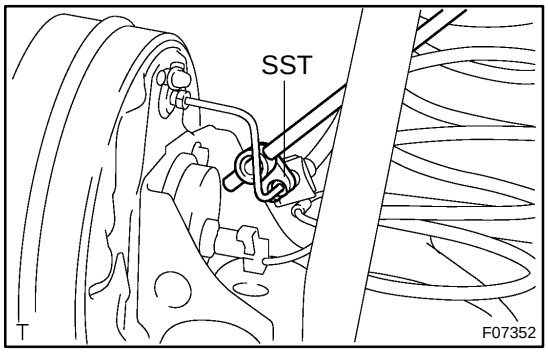

2. DISCONNECT BRAKE LINES

(a) Using SST, disconnect the brake lines from the flexible hose. Use a container to catch brake fluid as it drains out.
SST 09023-00100

(b) Remove the clip.

(c) Employ the same manner described above to the other side.

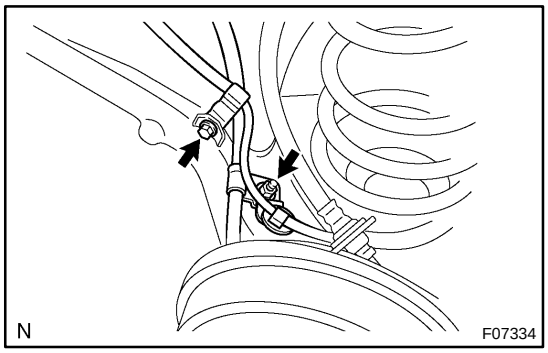

3. DISCONNECT ABS SPEED SENSOR WIRE HARNESS AND PARKING BRAKE CABLE CLAMPS

(a) Remove the bolt and nut, and disconnect the ABS speed sensor wire harness and parking brake cable clamps from the axle beam.

(b) Employ the same manner described above to the other side.

4. REMOVE AXLE HUB ASSEMBLES (See page SA-42)

5. REMOVE REAR COIL SPRINGS (See page SA-49)

6. REMOVE REAR AXLE BEAM

Remove the 2 bolts and rear axle beam.

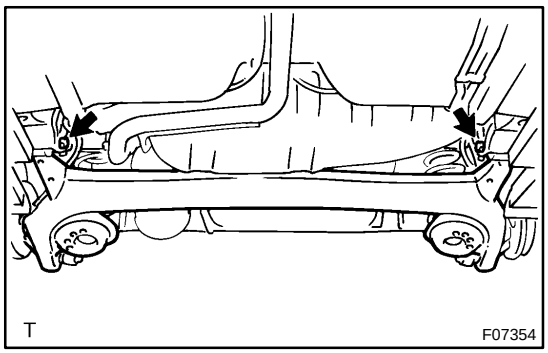

SA0QY-05

REPLACEMENT

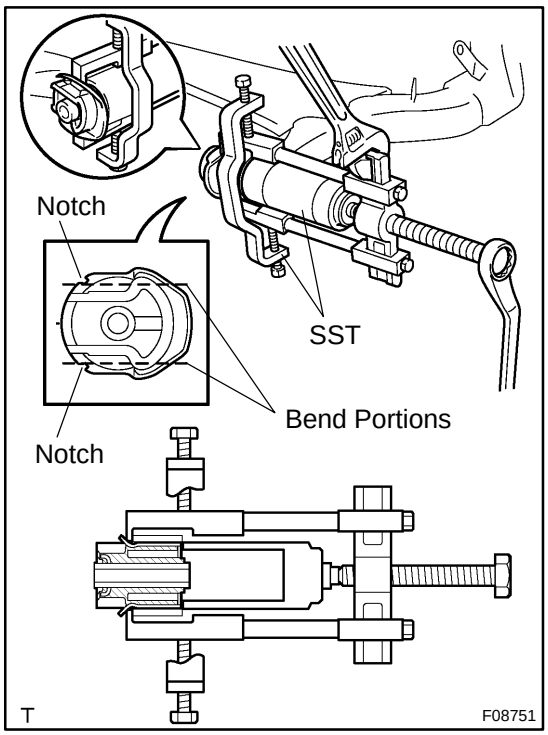

1. REMOVE BUSHING

(a) Place matchmarks on the 2 notches of the bushing and axle beam.

(b) Using a chisel and hammer, bend the 2 portions of the bushing rib.

HINT:

Bend the bushing rib until the claw of SST can be hung.

(c) Using SST, remove the bushing from the axle beam.

SST 09309-37010, 09950-40011 (09951-04010, 09952-04010, 09953-04010, 09954-04020, 09955-04051, 09957-04010, 09958-04011)

NOTICE:

If the axle beam has been scratched, apply the paint.

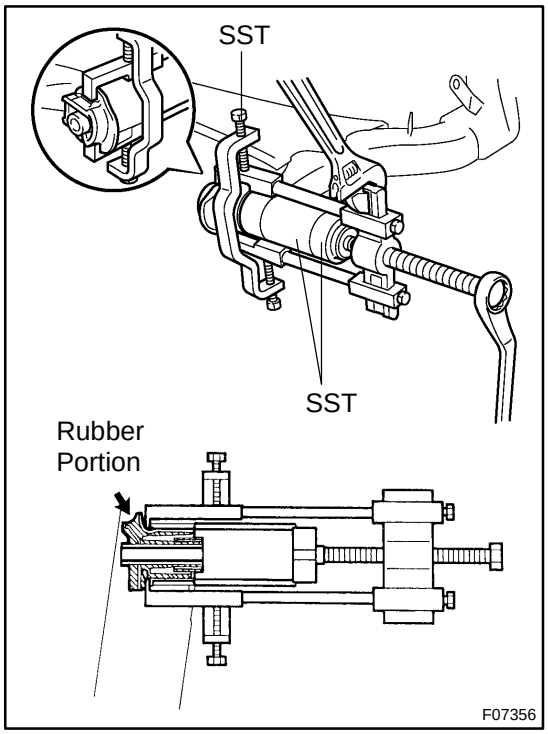

2. INSTALL BUSHING

(a) Align the matchmarks on the axle beam with the 2 notches of a new bushing and temporarily install the bushing to the axle beam.

(b) Using SST, install the bushing to the axle beam.

SST 09710-14013 (09710-00021), 09950-40011 (09951-04010, 09952-04010, 09953-04030, 09954-04020, 09955-04031, 09957-04010, 09958-0401 1), 09950-60010 (09951-00560)

NOTICE:

- **Hang the claw of SST to the bushing deeply and firmly.**
- **Do not scratch the rubber portion of the bushing.**
- **Do not deform the bushing rib.**

REAR AXLE HUB

SA085-07

COMPONENTS

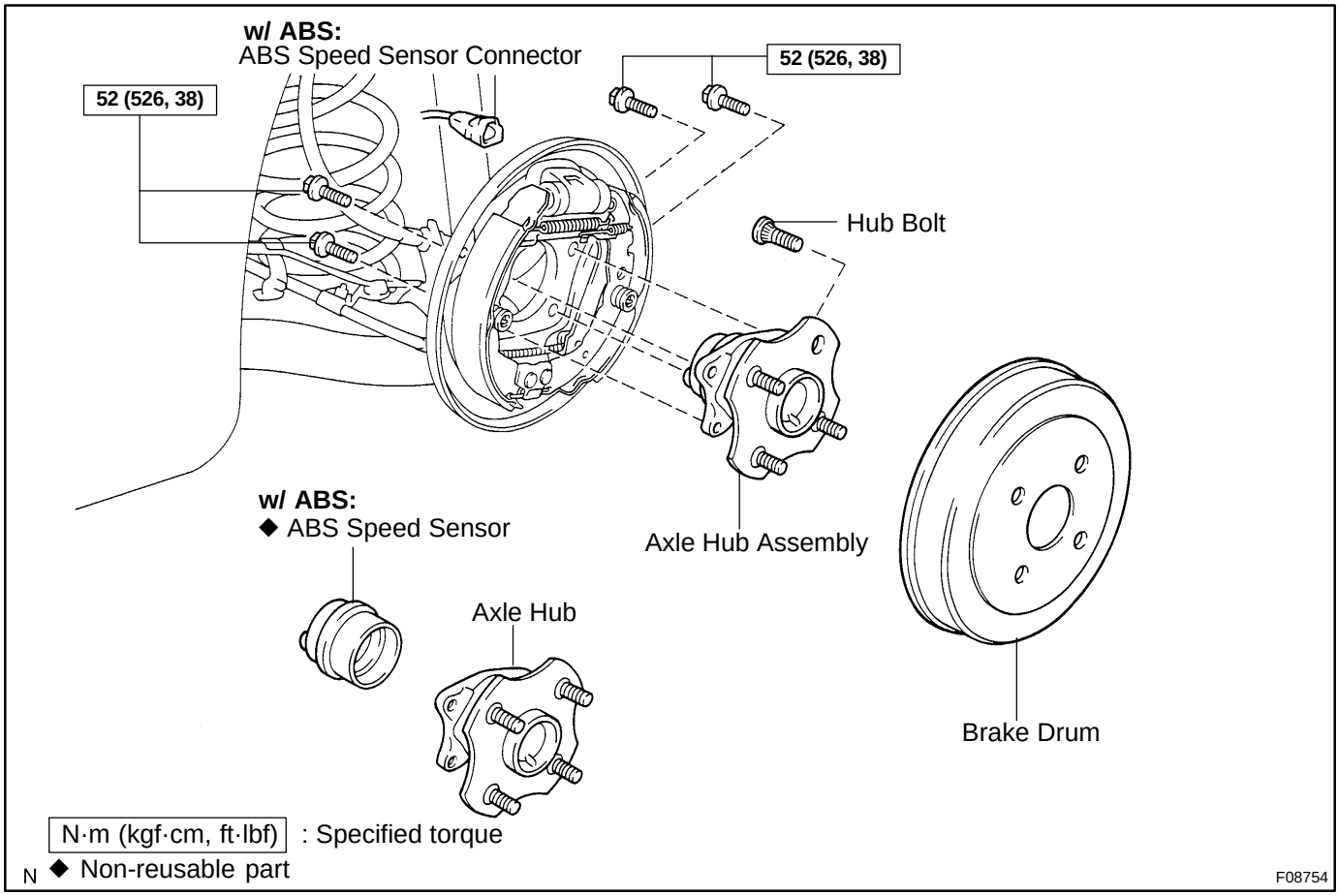

SA1L8-01

DISASSEMBLY

w/ ABS:

REMOVE ABS SPEED SENSOR

(a) Using a pin punch and hammer, drive out the 2 pins and remove the 2 attachments from SST.
SST 09520-00031 (09520-00040, 09521-00020)

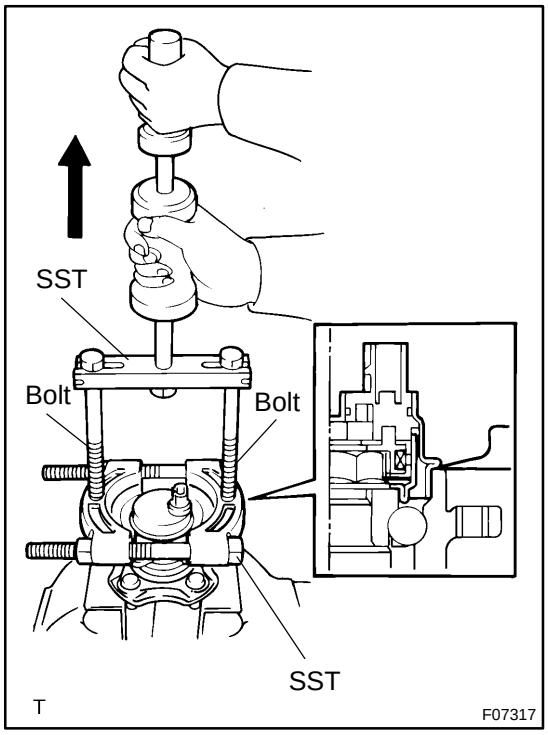

(b) Mount the axle hub assembly in a soft jaw vise.

NOTICE:

Replace the axle hub assembly if it is dropped or a strong shock is given to it.

(c) Using SST and 2 bolts (Diameter: 12 mm, Pitch: 1.5 mm), remove the ABS speed sensor.
SST 09520-00031 (09520-00040, 09521-00020), 09950-00020

NOTICE:

- **Do not allow any foreign matter sticking to the sensor rotor.**
- **Pull out the ABS speed sensor straightly not to damage the sensor rotor.**
- **If damage has occurred to the sensor rotor, replace the axle hub assembly.**
- **Do not scratch the contacting surface of the axle hub and speed sensor.**

SA087-04

INSTALLATION

1. INSTALL AXLE HUB ASSEMBLY

Install the axle hub assembly with the 4 bolts.

Torque: 52 N·m (526 kgf·cm, 38 ft·lbf)

2. w/ ABS:

CONNECT ABS SPEED SENSOR CONNECTOR TO AXLE HUB ASSEMBLY

3. CHECK BEARING BACKLASH AND AXLE HUB DEVIATION (See page SA-42)

4. INSTALL BRAKE DRUM

5. INSTALL REAR WHEEL

Torque: 103 N·m (1,050 kgf·cm, 76 ft·lbf)

6. w/ ABS:

CHECK ABS SPEED SENSOR SIGNAL (See page DI-201)

SA1L9-01

REASSEMBLY

w/ ABS:

INSTALL NEW ABS SPEED SENSOR

(a) Clean the contacting surface of the axle hub and a new ABS speed sensor.

NOTICE:

Do not allow any foreign matter sticking to the sensor rotor.

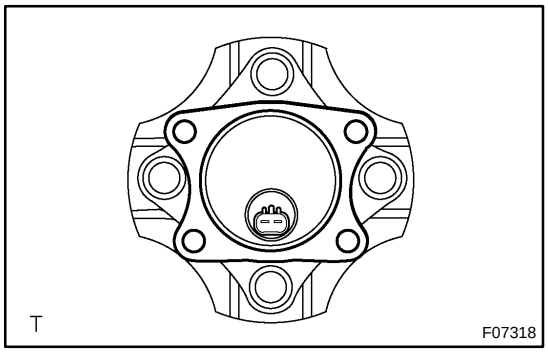

(b) Place the ABS speed sensor on the axle hub so that the connector is set at the bottom under the on-vehicle condition.

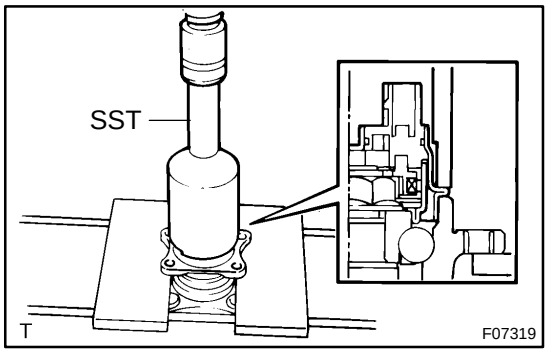

(c) Using SST and a press, install a new ABS speed sensor to the axle hub.

SST 09214-7601 1

NOTICE:

- **Do not tap the speed sensor with a hammer directly.**
- **Check that there should be no foreign matter on the speed sensor detection portion.**
- **Press in the ABS speed sensor straightly and slowly.**

SA1L7-01

REMOVAL

1. REMOVE REAR WHEEL

2. REMOVE BRAKE DRUM

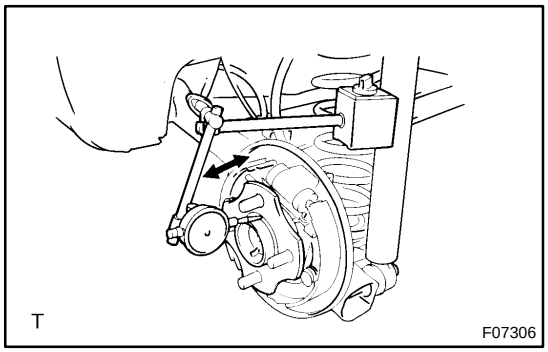

3. CHECK BEARING BACKLASH AND AXLE HUB DEVIATION

(a) Set a dial indicator near the center of the axle hub and check the backlash in the bearing shaft direction.

Maximum: 0.05 mm (0.0020 in.)

If the backlash exceeds the maximum, replace the axle hub assembly.

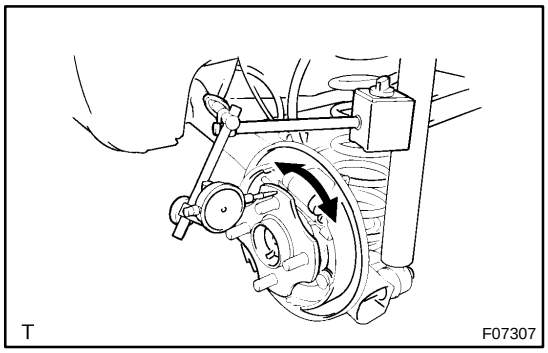

(b) Using a dial indicator, check the deviation at the surface of the axle hub outside the hub bolt.

Maximum: 0.07 mm (0.0028 in.)

If the deviation exceeds the maximum, replace the axle hub assembly.

4. w/ ABS:

DISCONNECT ABS SPEED SENSOR CONNECTOR

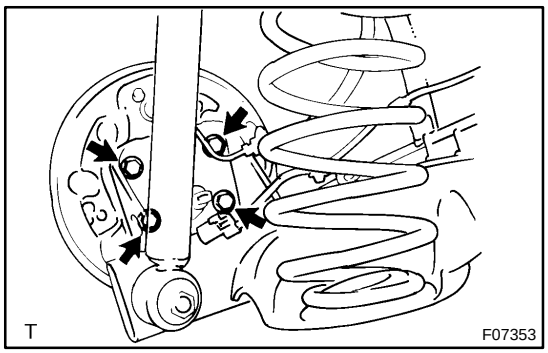

5. REMOVE AXLE HUB ASSEMBLY

(a) Remove the 4 bolts and axle hub assembly.

(b) Support the rear brake assembly securely.

REAR WHEEL ALIGNMENT

SA0QR-07

INSPECTION

1. MEASURE VEHICLE HEIGHT (See page SA-5)

NOTICE:

Before inspecting the wheel alignment, adjust the vehicle height to the specified value.

2. INSPECT CAMBER

Camber:

Camber	-0 °57' ± 45' (-0.95° ± 0.75°)
Right-left error	45' (0.75°) or less

If the measured value is not within the specified value, inspect the suspension parts for damage and/or wear and replace them if necessary because camber is not adjustable.

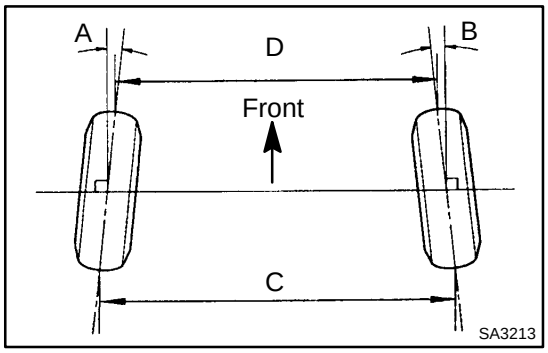

3. INSPECT TOE-IN

Toe-in:

Toe-in (total)	A + B: 0°21' ± 20' (0.35° ± 0.33°) C - D: 3.3 ± 3.0 mm (0.13 ± 0.12 in.)

If the toe-in is not within the specified value, inspect and replace the suspension parts as necessary.

REAR WHEEL HUB BOLT

SA0DB-04

REPLACEMENT

1. REMOVE REAR WHEEL

2. REMOVE BRAKE DRUM

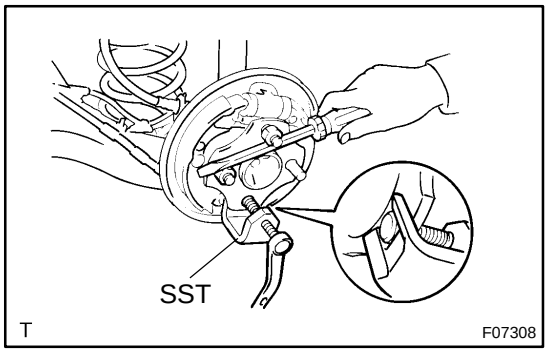

3. REMOVE HUB BOLT

Using SST, 2 nuts and a screwdriver or an equivalent, remove the hub bolt.

SST 09628-1001 1

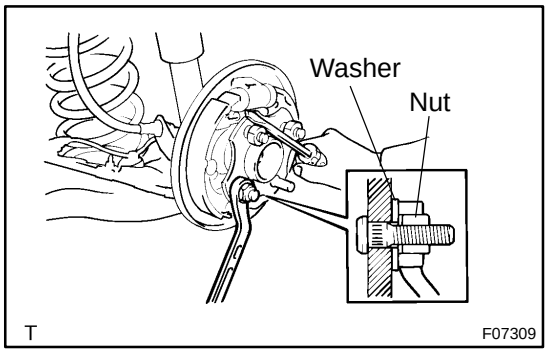

4. INSTALL HUB BOLT

(a) Install a washer and nut to a new hub bolt as shown in the illustration.

(b) Using a screwdriver or an equivalent to hold, install the hub bolt by torquing the nut.

(c) Remove the 3 nuts and washer.

5. INSTALL BRAKE DRUM

6. INSTALL REAR WHEEL

Torque: 103 N·m (1,050 kgf·cm, 76 ft·lbf)

TIRE AND WHEEL

SA0CC-14

INSPECTION

1. INSPECT TIRE

(a) Check the tires for wear and proper inflation pressure.

Cold tire inflation pressure:
(Tire size: P175/65R14 81S)

Front	Rear
220 kPa (2.2 kgf/cm^2, 32 psi)	220 kPa (2.2 kgf/cm^2, 32 psi)

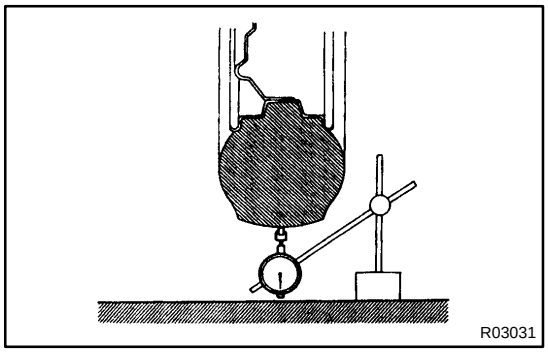

(b) Using a dial indicator, check the tire runout.
Tire runout: 1.0 mm (0.039 in.) or less

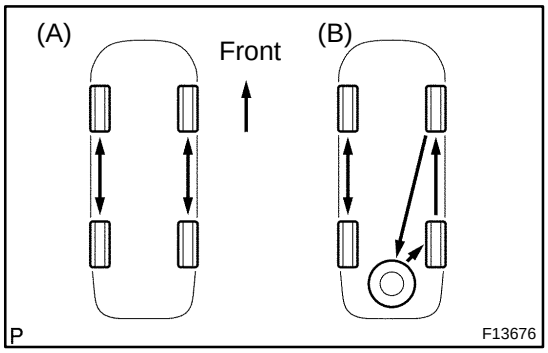

2. ROTATING TIRES

HINT:

- Rotate tires as shown in the illustration.
- Rotate as shown in (B) if the spare tire is included in the rotation.

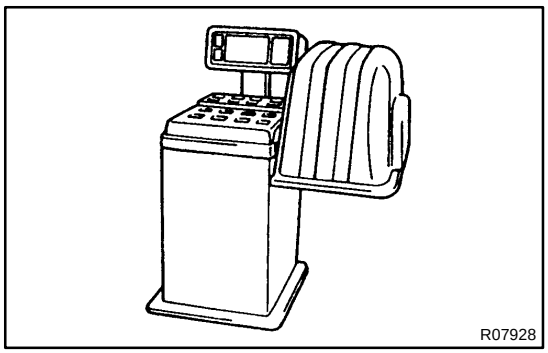

3. INSPECT WHEEL BALANCE

(a) Check and adjust the Off-the-car balance.

(b) If necessary, check and adjust the On-the-car balance.
Imbalance after adjustment: 8.0 g (0.018 lb) or less

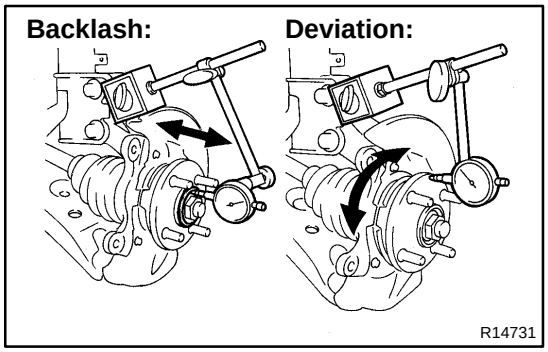

4. CHECK WHEEL BEARING LOOSENESS

(a) Using a dial indicator, check the backlash near the center of the axle hub.
Maximum: 0.05 mm (0.0020 in.)

If the backlash exceeds the maximum, replace the bearing.

(b) Using a dial indicator, check the deviation at the surface of the axle hub outside the hub bolt.
Maximum: 0.05 mm (0.0020 in.)

If the deviation exceeds the maximum, replace the axle hub.

5. CHECK FRONT SUSPENSION FOR LOOSENESS

6. CHECK STEERING LINKAGE FOR LOOSENESS

7. CHECK BALL JOINT FOR LOOSENESS

8. CHECK SHOCK ABSORBER WORKS PROPERLY

- Check if oil leaks
- Check mounting bushings for wear
- Bounce front and rear of the vehicle

TROUBLESHOOTING

SA0CB-14

PROBLEM SYMPTOMS TABLE

Use the table below to help you find the cause of the problem. The numbers indicate the priority of the likely cause of the problem. Check each part in order. If necessary, replace these parts.

Symptom	Suspect Area	See page
Bottoming	1. Vehicle (Overloaded)	-
	2. Spring (Weak)	SA-25 SA-47
	3. Shock absorber (Worn)	SA-28 SA-51
Sways/pitches	1. Tire (Worn or improperly inflated)	SA-3
	2. Stabilizer bar (Bent or broken)	SA-36
	3. Shock absorber (Worn)	SA-28 SA-51
Front wheel shimmy	1. Tire (Worn or improperly inflated)	SA-3
	2. Wheel (Out of balance)	SA-3
	3. Shock absorber (Worn)	SA-28
	4. Wheel alignment (Incorrect)	SA-5
	5. Ball joint (Worn)	SA-34
	6. Hub bearing (Worn)	SA-10
	7. Steering linkage (Loose or worn)	-
	8. Steering gear (Out of adjustment or broken)	SR-33 SR-45
Abnormal tire wear	1. Tire (Worn or improperly inflated)	SA-3
	2. Wheel alignment (Incorrect)	SA-5
	3. Shock absorber (Worn)	SA-28 SA-51
	4. Suspension parts (Worn)	-

SA28V-01

REPAIR PROCEDURES

HINT:

This is a flow chart for vehicle pull.

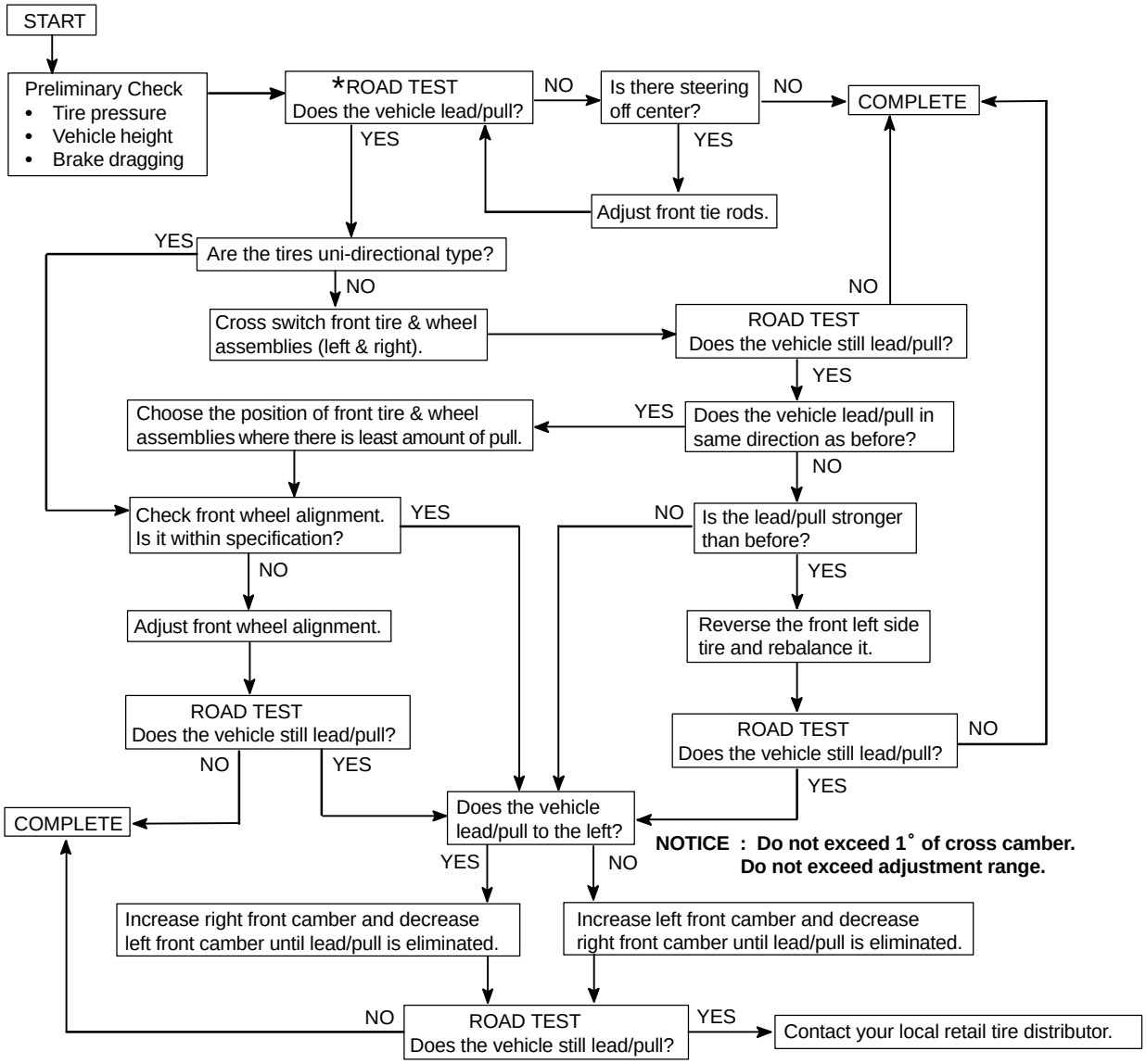

* Select a flat road where the vehicle can be driven in a straight line for 100 meters at a constant speed of 35mph. Please confirm safety and set the steering wheel to its straight position. Drive the vehicle in a straight line for 100 meters at a constant speed of 35mph without holding the steering wheel.

(1) The vehicle can keep straight but the steering wheel has some angle.
→ STEERING OFF CENTER (See page SR-9)

(2) The vehicle cannot keep straight.
→ STEERING PULL

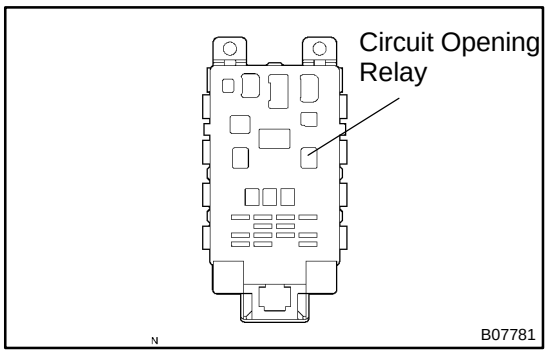

CIRCUIT OPENING RELAY

SF0A0-06

INSPECTION

1. REMOVE CIRCUIT OPENING RELAY

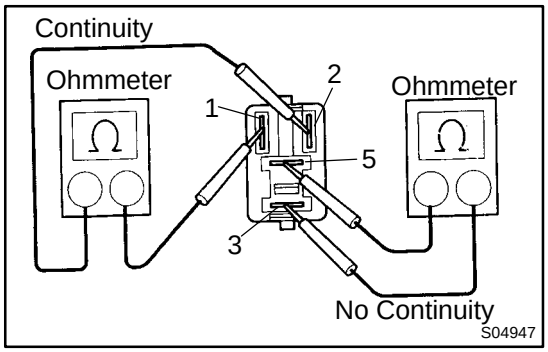

2. INSPECT CIRCUIT OPENING RELAY CONTINUITY

(a) Using an ohmmeter, check that there is continuity between terminals 1 and 2.

If there is no continuity, replace the relay.

(b) Check that there is no continuity between terminals 3 and 5.

If there is continuity, replace the relay.

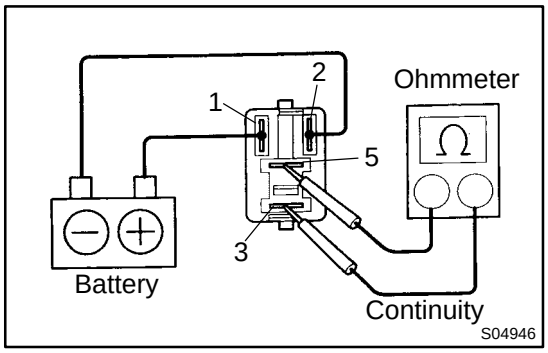

3. INSPECT CIRCUIT OPENING RELAY OPERATION

(a) Apply battery voltage across terminals 1 and 2.

(b) Using an ohmmeter, check that there is continuity between terminals 3 and 5.

If there is no continuity, replace the relay.

4. REINSTALL CIRCUIT OPENING RELAY

SF0NQ-03

COMPONENTS

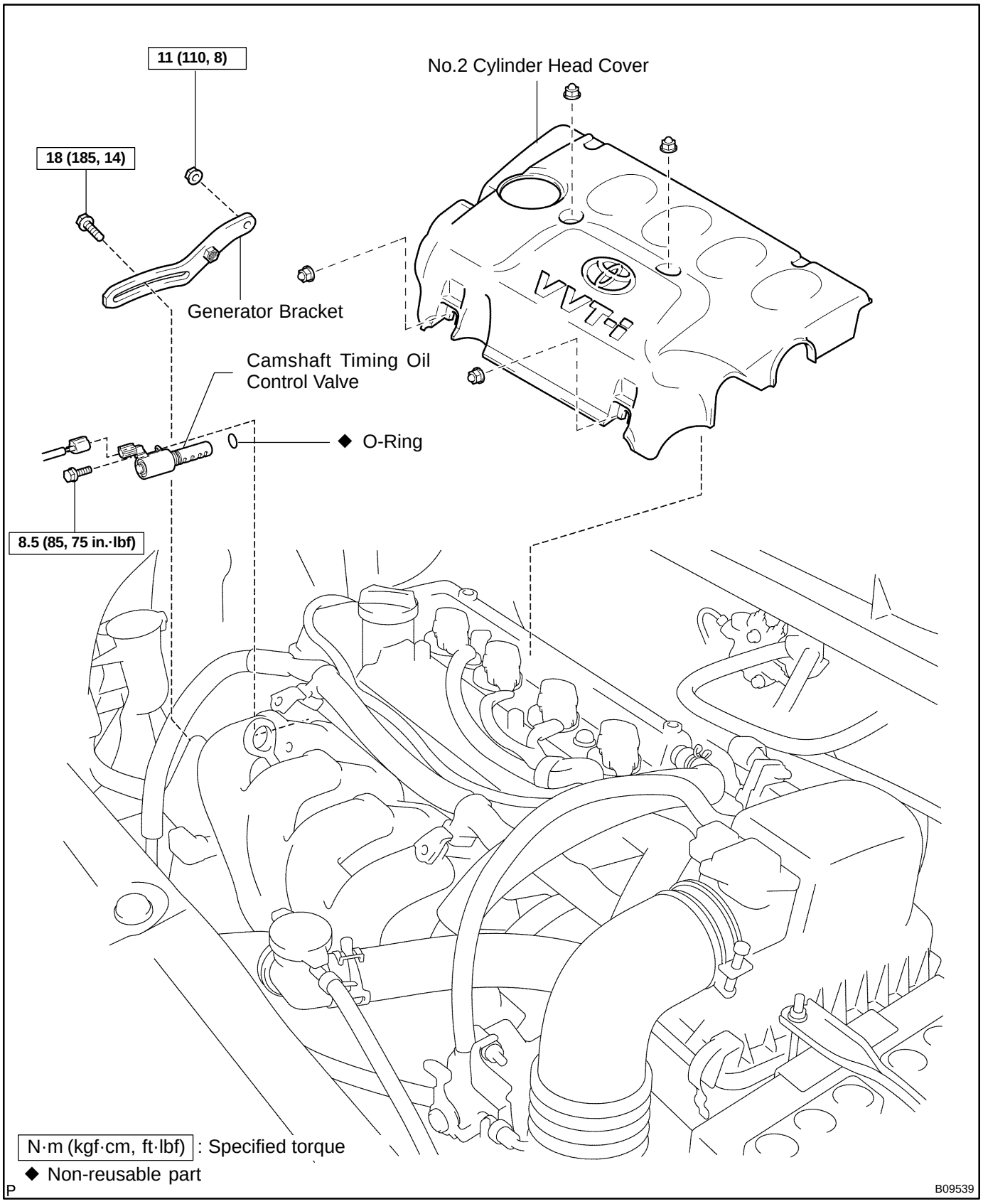

SF16V-01

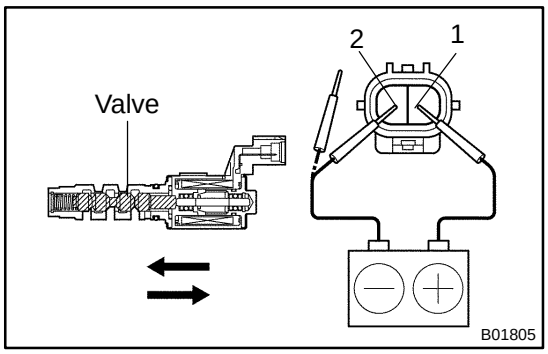

INSPECTION

INSPECT CAMSHAFT TIMING OIL CONTROL VALVE OPERATION

Connect positive (+) lead from the battery to terminal 1 and negative (-) lead to terminal 2, and check the movement of the valve.

Battery voltage is applied	Valve moves in ← direction
Battery voltage is cut off	Valve moves in → direction

If operation is not as specified, replace the valve.

SF16W-01

INSTALLATION

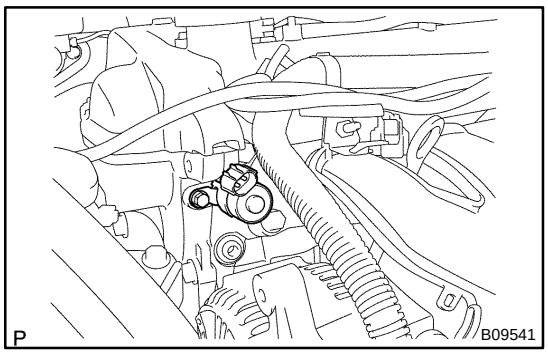

1. INSTALL CAMSHAFT TIMING OIL CONTROL VALVE

(a) Install the bolt, oil control valve and O-ring.
Torque: 8.5 N·m (85 kgf·cm, 75 in.·lbf)

(b) Connect the oil control valve connector.

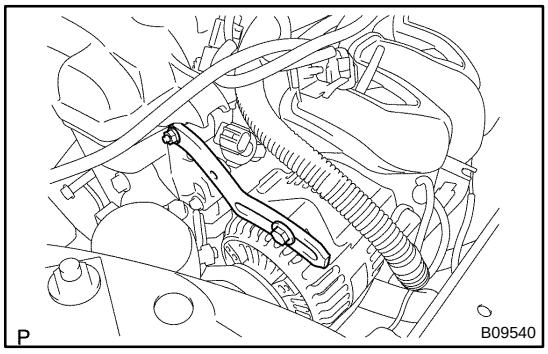

2. INSTALL GENERATOR STAY

(a) Install the generator bracket with the nut.
Torque:11 N·m (110 kgf·cm, 8 ft·lbf)

(b) Adjust the belt tension and torque the bolt (See page CH-2).
Torque:18 N·m (185 kgf·cm, 14 ft·lbf)

3. INSTALL NO.2 CYLINDER HEAD COVER

Install the 4 nuts and No. 2 cylinder head cover.

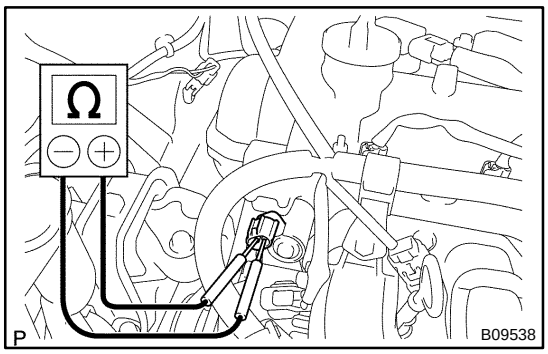

CAMSHAFT TIMING OIL CONTROL VALVE

SF0NR-05

ON-VEHICLE INSPECTION

1. REMOVE NO.2 CYLINDER HEAD COVER

2. INSPECT CAMSHAFT TIMING OIL CONTROL VALVE RESISTANCE

(a) Disconnect the oil control valve connector.

(b) Using an ohmmeter, measure the resistance between the terminals.

Resistance: 5.5 - 12 Ω at 20˚C (68˚F)

If the resistance is not as specified, replace the valve.

(c) Reconnect the oil control valve connector.

3. INSPECT VVT-i OPERATION

(a) Allow the engine to warm up to normal operating temperature.

(b) Check that the engine stalls or becomes in rough-idling state when the battery positive voltage is applied to the oil control valve with the engine idling.

If operation is not as specified, check the oil control valve (see page SF-45), VVT-i pulley, intake camshaft, wiring and engine ECU.

4. INSTALL NO.2 CYLINDER HEAD COVER

SF16U-01

REMOVAL

1. REMOVE NO.2 CYLINDER HEAD COVER

Remove the 4 nuts and No. 2 cylinder head cover.

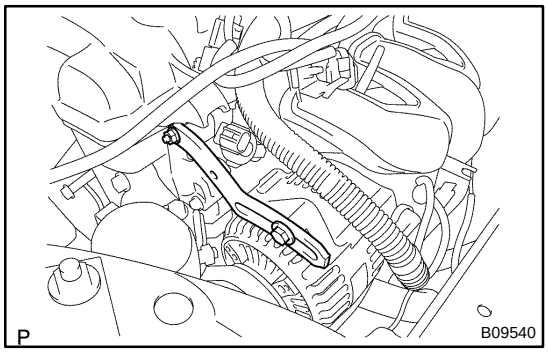

2. REMOVE GENERATOR BRACKET

Rmove the bolt, nut and generator bracket.

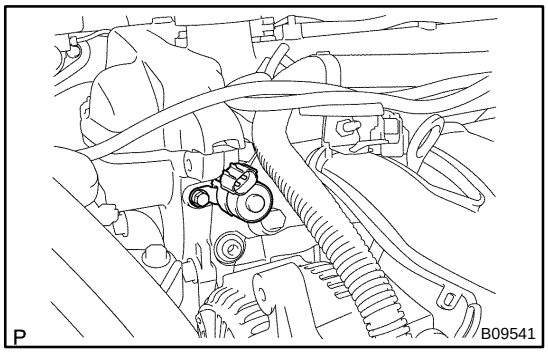

3. REMOVE CAMSHAFT TIMING OIL CONTROL VALVE

(a) Disconnect the oil control valve connector.

(b) Remove the bolt, oil control valve and O-ring.

ENGINE CONTROL MODULE (ECM)

SF0AB-02

COMPONENTS

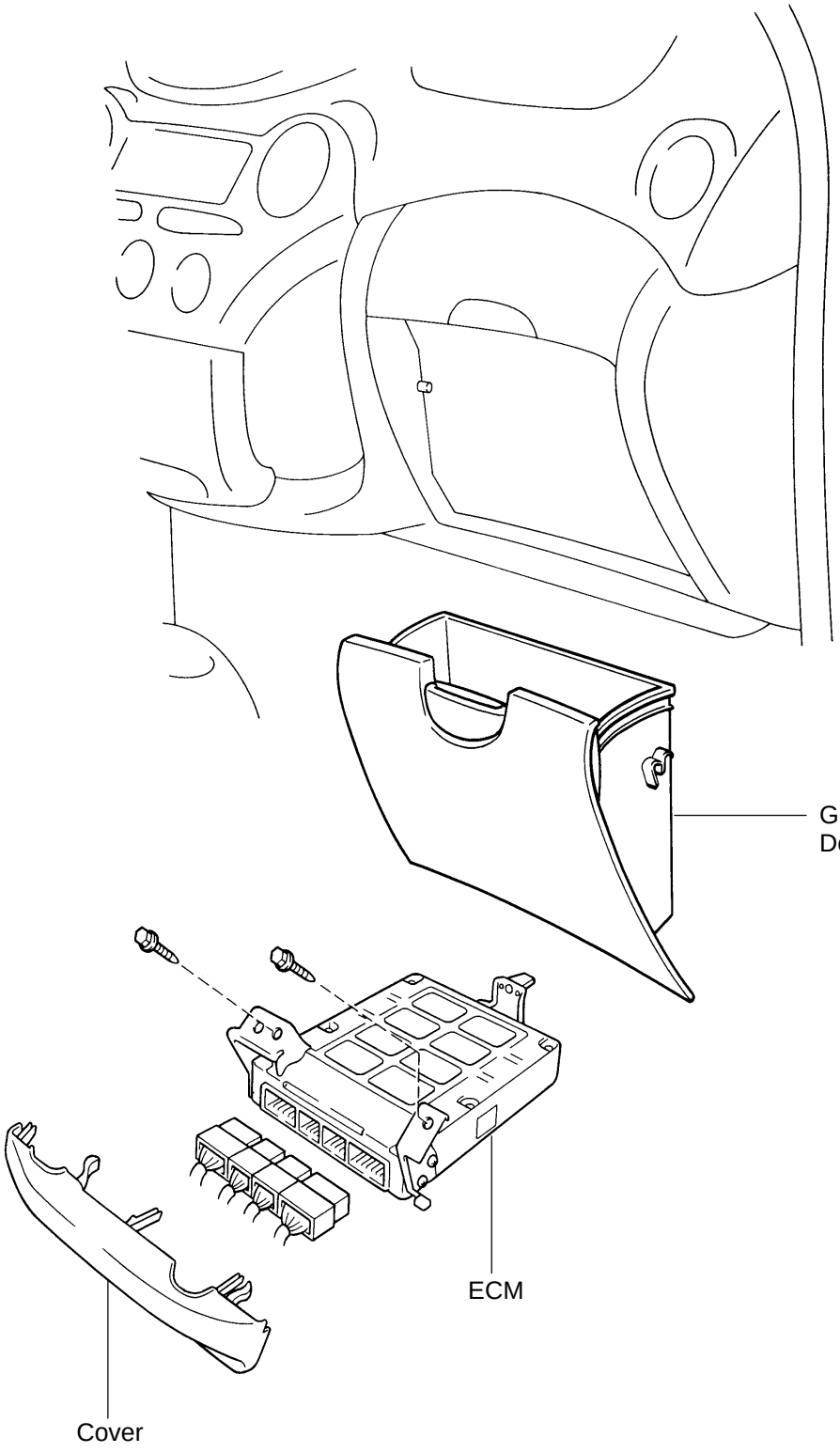

N

B07685

SF0AC-04

INSPECTION

1. REMOVE ECM

(a) Remove the glove compartment door (See page BO-76).

(b) Remove the connector cover.

(c) Remove the 2 screws and ECM.

(d) Disconnect the ECM connectors.

2. INSPECT ECM (See page DI-19)

3. REINSTALL ECM

(a) Connect the 3 ECM connectors.

(b) Install the ECM with the 2 screws.

(c) Install the connector cover.

(d) Install the glove compartment door (See page BO-84).

ENGINE COOLANT TEMPERATURE (ECT) SENSOR

SF171-01

COMPONENTS

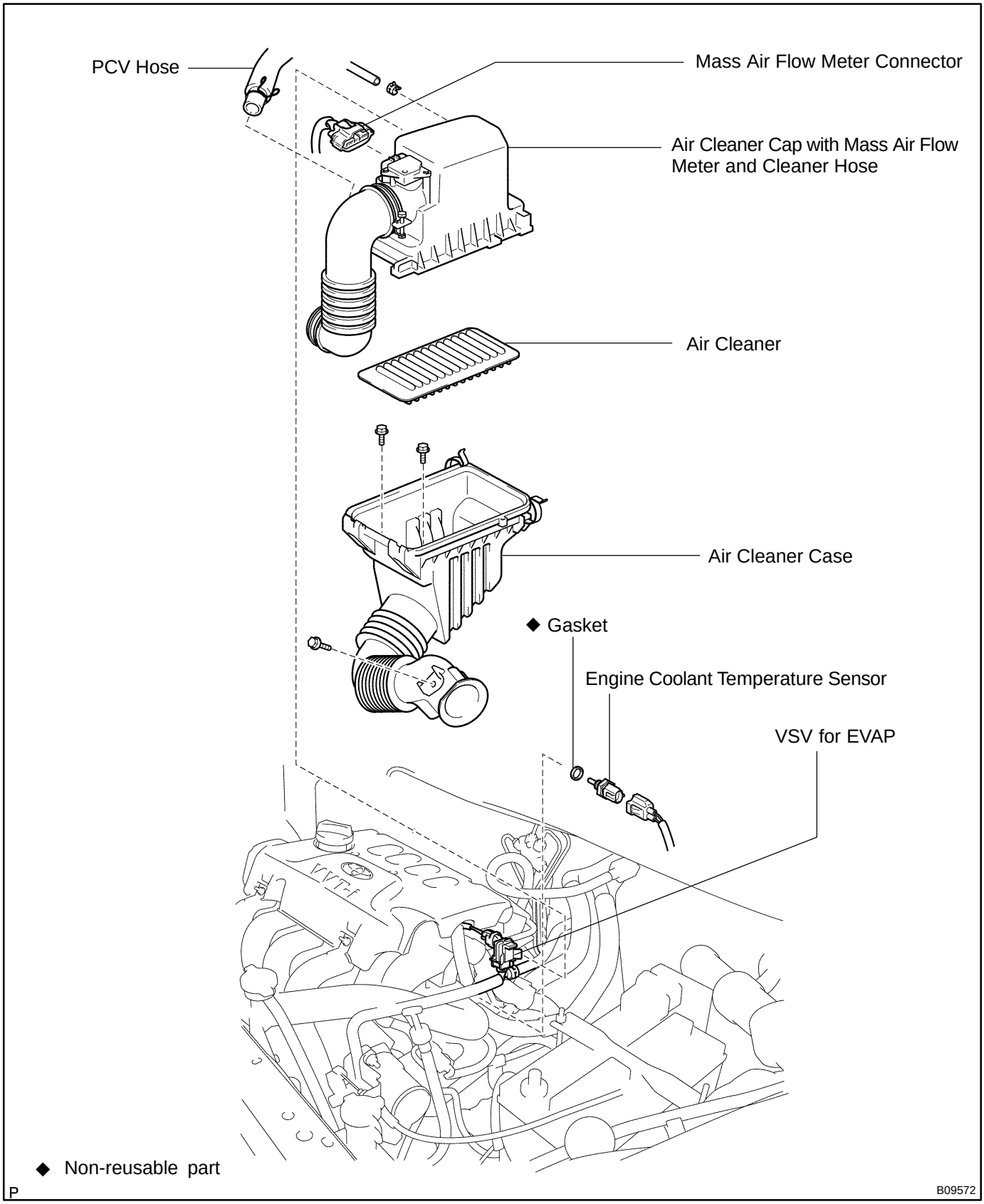

SF172-01

INSPECTION

1. **DRAIN ENGINE COOLANT**
2. **REMOVE NO.2 CYLINDER HEAD COVER**
3. **REMOVE AIR CLEANER ASSEMBLY (See page EM-53)**
4. **REMOVE ECT SENSOR**

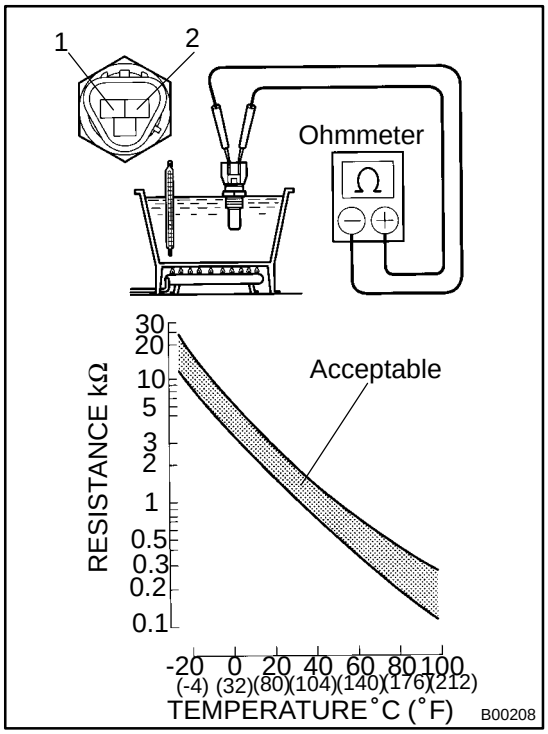

5. **INSPECT ECT SENSOR RESISTANCE**

Using an ohmmeter, measure the resistance between terminals 1 (E2) and 2 (THW).

Resistance:

Refer to the graph

If the resistance is not as specified, replace the ECT sensor.

6. **REINSTALL ECT SENSOR**

Install a new gasket to the ECT sensor.

7. **REINSTALL NO.2 CYLINDER HEAD COVER**
8. **REINSTALL AIR CLEANER ASSEMBLY**
9. **FILL RADIATOR WITH ENGINE COOLANT**

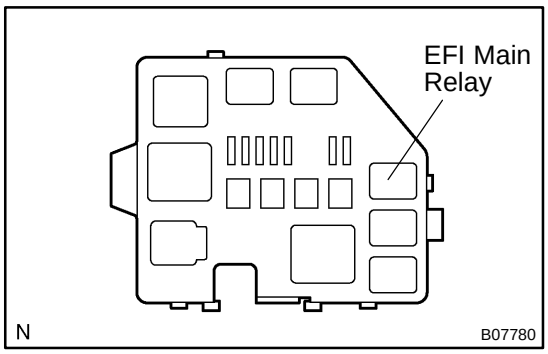

EFI MAIN RELAY

SF09Z-06

INSPECTION

1. REMOVE EFI MAIN RELAY (Marking: EFI)

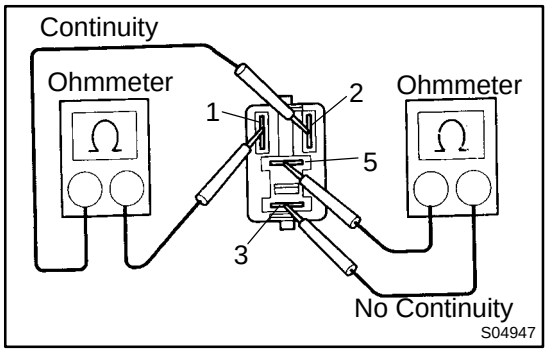

2. INSPECT EFI MAIN RELAY CONTINUITY

(a) Using an ohmmeter, check that there is continuity between terminals 1 and 2.

If there is no continuity, replace the relay.

(b) Check that there is no continuity between terminals 3 and 5.

If there is continuity, replace the relay.

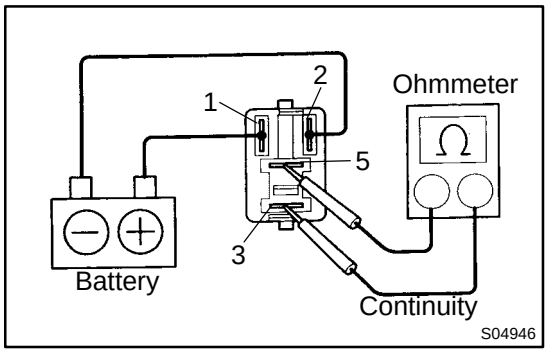

3. INSPECT EFI MAIN RELAY OPERATION

(a) Apply battery voltage across terminals 1 and 2.

(b) Using an ohmmeter, check that there is continuity between terminals 3 and 5.

If there is no continuity, replace the relay.

4. REINSTALL EFI MAIN RELAY

FUEL CUT RPM

SF0AD-07

INSPECTION

1. WARM UP ENGINE

Allow the engine to warm up to normal operating temperature.

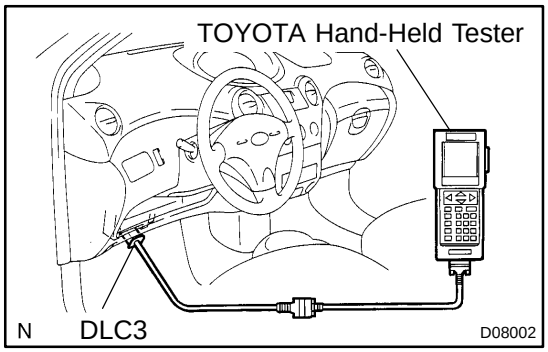

2. CONNECT TOYOTA HAND-HELD TESTER OR OBD II SCAN TOOL

(a) Connect the TOYOTA hand-held tester or OBD II scan tool to the DLC3.

(b) Please refer to the TOYOTA hand-held tester or OBD II scan tool operator's manual for further details.

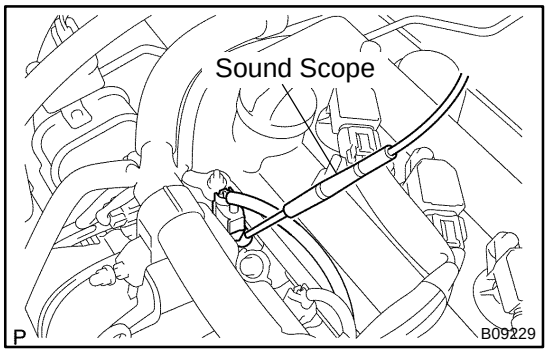

3. INSPECT FUEL CUT OFF RPM

(a) Increase the engine speed to at least 3,500 rpm.

(b) Use a sound scope to check for injector operating noise.

(c) Check that when the throttle lever is released injector, operation noise stops momentary and then resumes.

HINT:

Measure with the A/C OFF.

Fuel return rpm:
1,400 rpm

4. DISCONNECT TOYOTA HAND-HELD TESTER OR OBD II SCAN TOOL

FUEL PRESSURE REGULATOR

SF09E-06

COMPONENTS

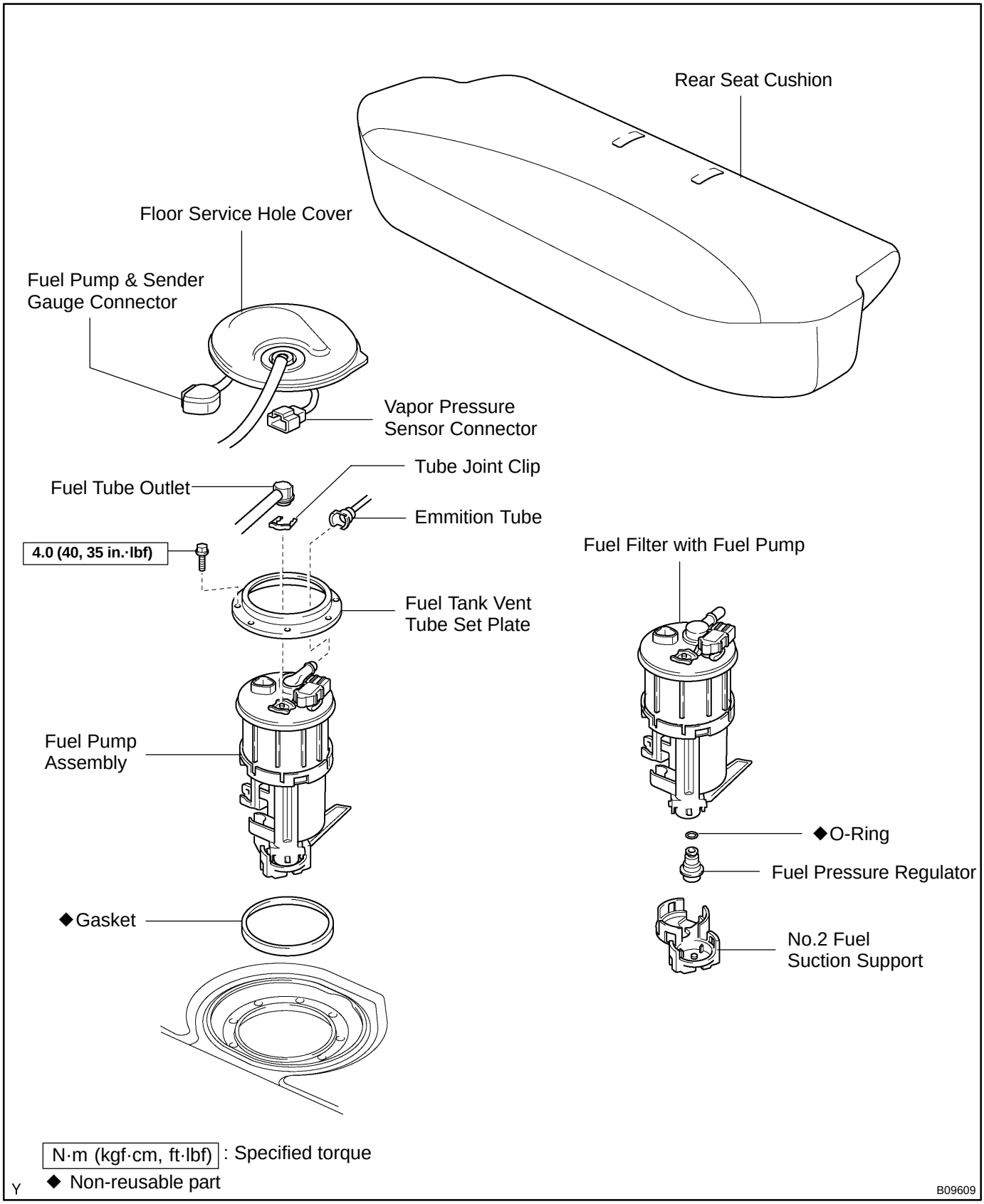

SF0Z6-06

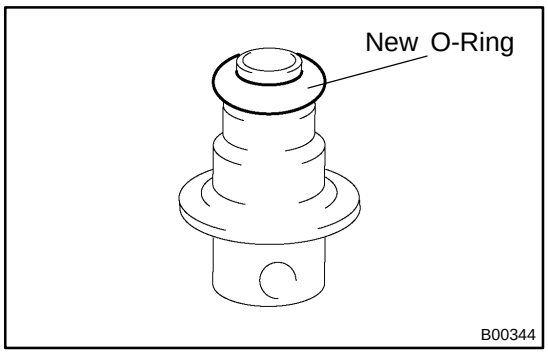

INSTALLATION

1. INSTALL FUEL PRESSURE REGULATOR

(a) Install the O-ring to the pressure regulator.

HINT:

Apply a light coat of gasoline to a new O-ring, and install it to the pressure regulator.

(b) Connect the pressure regulator from the fuel filter.

2. INSTALL NO.2 FUEL SUCTION SUPPORT
(See page SF-13)

3. INSTALL FUEL PUMP ASSEMBLY FROM FUEL TANK
(See page SF-14)

SF16O-01

REMOVAL

1. REMOVE FUEL PUMP ASSEMBLY FROM FUEL TANK (See page SF-11)

2. REMOVE NO. 2 FUEL SUCTION SUPPORT (See page SF-12)

3. REMOVE FUEL PRESSURE REGULATOR

(a) Pull out the pressure regulator.

(b) Remove the O-ring from the pressure regulator.

SF09N-05

COMPONENTS

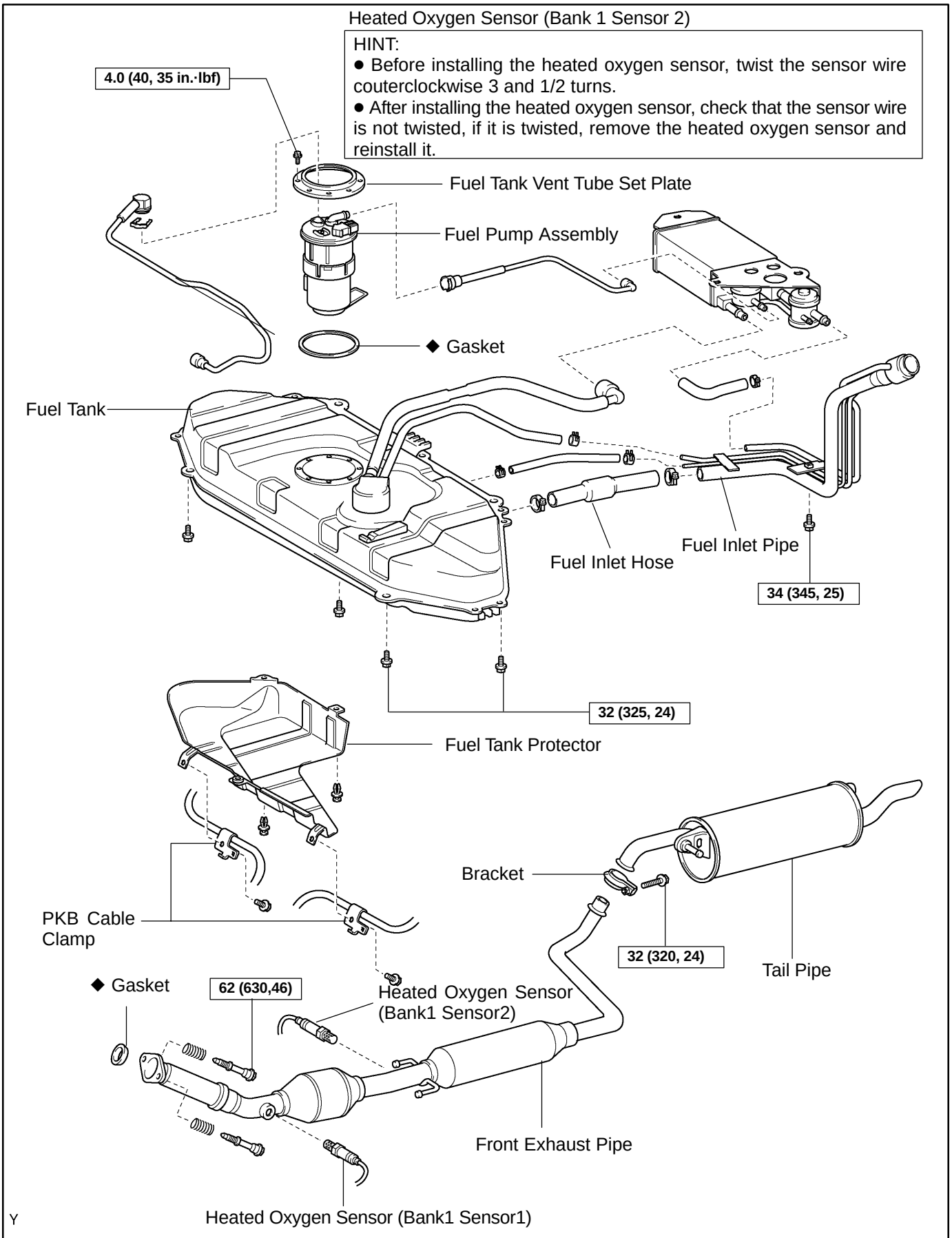

SF09O-04

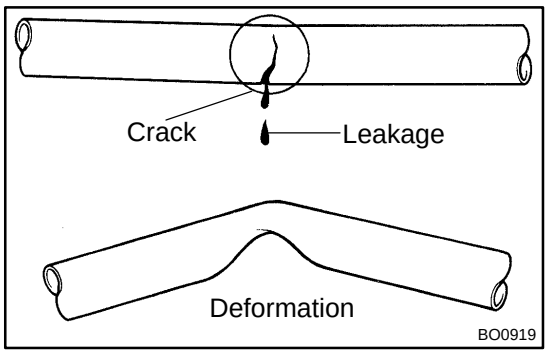

INSPECTION

INSPECT FUEL TANK AND LINE

(a) Check the fuel lines for cracks or leakage, and all connections for deformation.
(b) Check the fuel tank for deformation, cracks fuel leakage or tank band looseness.
(c) Check the filter neck for damage or fuel leakage.
(d) Hose and tube connections are as shown in the illustration.

If a problem is found, repair or replace the part as necessary.

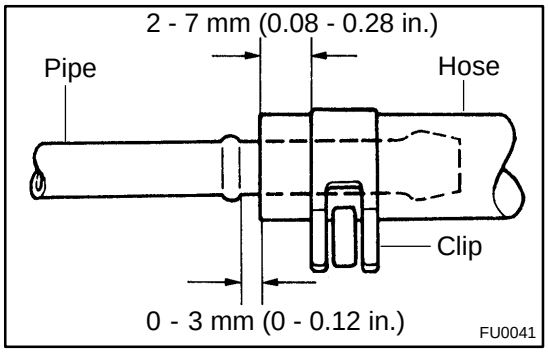

FUEL TANK AND LINE

SF09M-01

PRECAUTION

- **Always use new gaskets when replacing the fuel tank or component parts.**
- **Apply the proper torque to all parts tightened.**

SF099-06

COMPONENTS

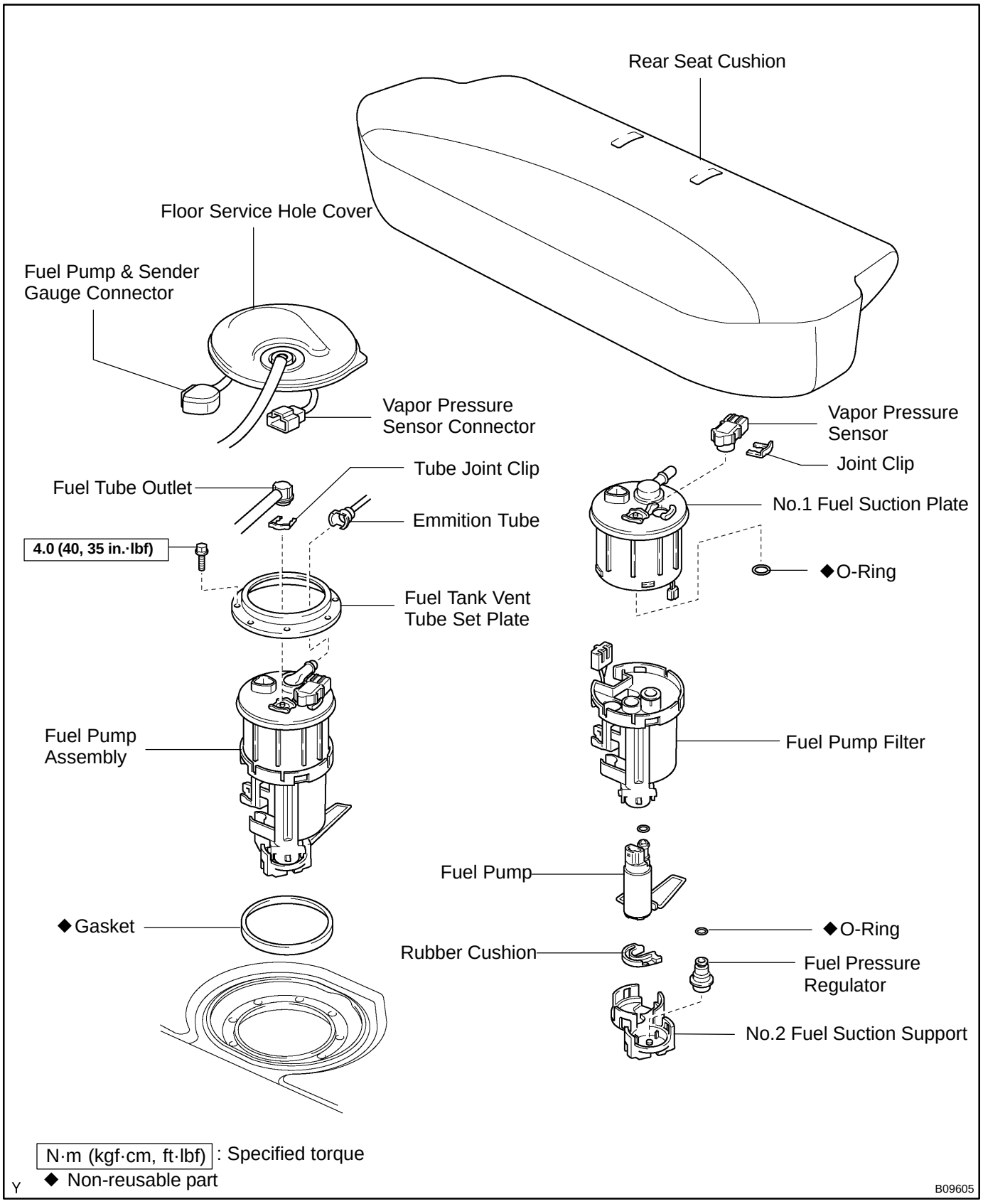

SF16M-01

DISASSEMBLY

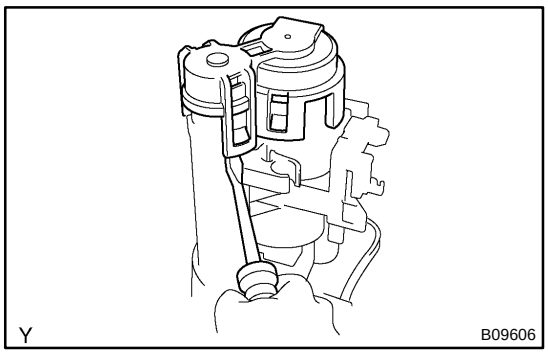

1. REMOVE NO. 2 FUEL SUCTION SUPPORT

(a) Using a small screwdriver, remove the No. 2 fuel suction support.

(b) Remove the rubber cushion and fuel pressure regulator.

(c) Remove the O-ring from the pressure regulator.

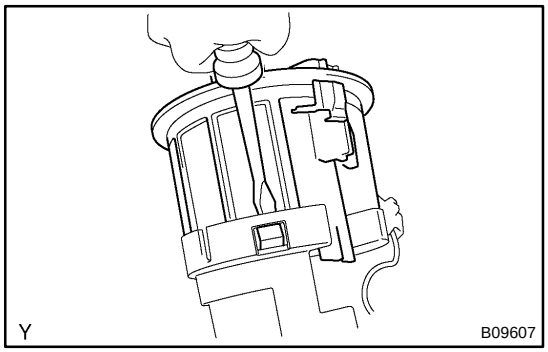

2. REMOVE NO. 1 FUEL SUCTION SUPPORT

(a) Disconnect the fuel sender gauge connector.

(b) Using a small screwdriver, remove the No. 1 fuel suction support.

NOTICE:

Do not damage the fuel suction support and fuel suction plate.

(c) Disconnect the fuel pump harness from the fuel pump.

(d) Remove the O-ring from the No. 1 fuel suction support.

3. REMOVE VAPOR PRESSURE SENSOR

Pull off the joint clip and remove the vapor pressure sensor from No. 1 fuel suction support.

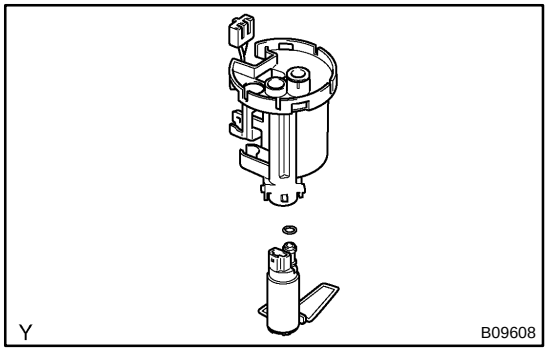

4. REMOVE FUEL PUMP

(a) Remove the fuel pump from the fuel filter.

(b) Remove the O-ring from the fuel pump.

SF09D-06

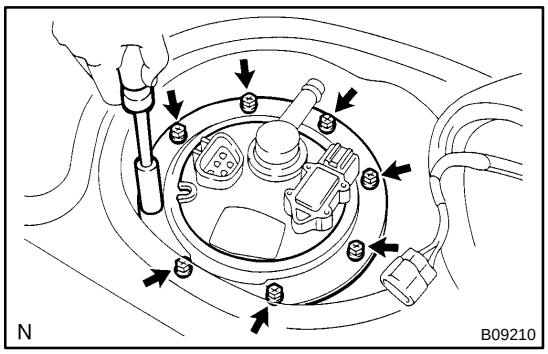

INSTALLATION

1. INSTALL FUEL PUMP ASSEMBLY

(a) Install the new gasket to the fuel pump assembly.

(b) Install the fuel pump assembly to the fuel tank.

NOTICE:

- **Do not damage the fuel pump filter.**
- **Be careful that the arm of the sender gauge should not bent.**

(c) Install the 8 bolts and fuel tank vent tube set plate from the fuel tank.

Torque: 4.0 N·m (40 kgf·cm, 35 in.·lbf)

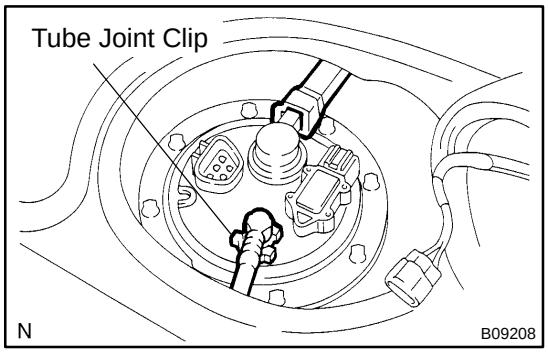

2. CONNECT FUEL TUBE

(a) Clean up around the fuel tube.

(b) Connect the fuel tube and emission tube to the fuel pump assembly.

(c) Connect the tube joint clip to the fuel suction plate.

3. CONNECT FUEL PUMP AND SENDER GAUGE CONNECTOR AND VAPOR PRESSURE SENSOR CONNECTOR

HINT:

Start the engine, check for fuel leakage.

4. INSTALL FLOOR SERVICE HOLE COVER

(a) Install the service hole cover.

(b) Install the floor carpet.

5. INSTALL REAR SEAT CUSHION

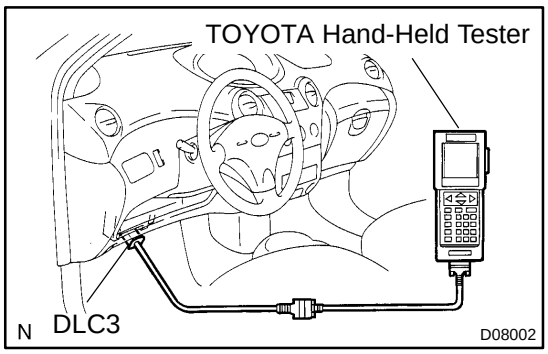

FUEL PUMP

SF098-07

ON-VEHICLE INSPECTION

1. CHECK FUEL PUMP OPERATION

(a) Connect the TOYOTA hand-held tester to the DLC3.

(b) Turn the ignition switch ON and TOYOTA hand-held tester main switch ON.

NOTICE:

Do not start the engine.

(c) Select the active test mode on the TOYOTA hand-held tester.

(d) Please refer to the TOYOTA hand-held tester operator's manual for further details.

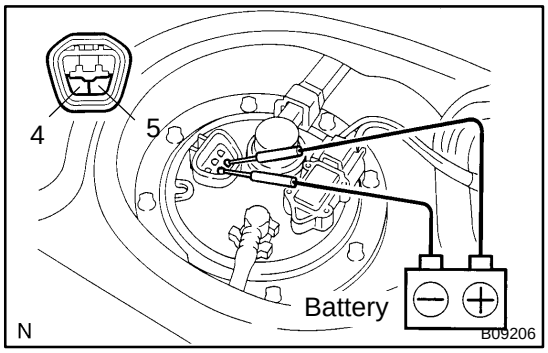

(e) If you have no TOYOTA hand-held tester, connect the positive (+) lead from the battery to terminal 4 of the connecter, and the negative (-) lead to terminal 5.

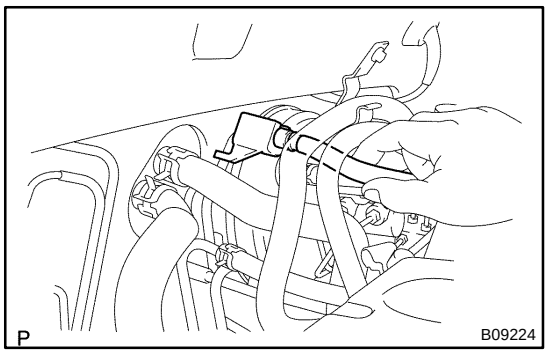

(f) Check that there is pressure in the fuel inlet pipe from the fuel line.

HINT:

If there is fuel pressure, you will hear the sound if fuel following. If there is no pressure, check these parts, Fusible link, Fuses, EFI Main relay, Fuel pump, ECM, and Witting connector.

(g) Turn the ignition switch to LOCK.

(h) Disconnect the TOYOTA hand- held tester from the DLC3.

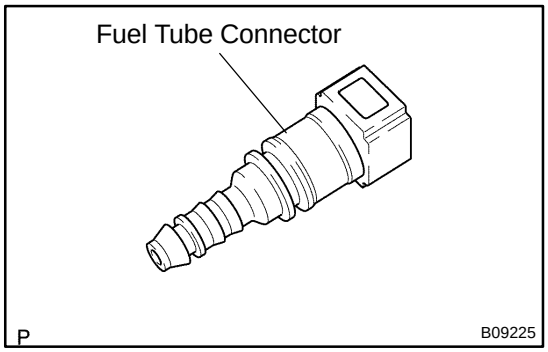

2. CHECK FUEL PRESSURE

(a) Check the battery positive voltage is above 12 V.

(b) Disconnect the negative (-) terminal cable from the battery.

(c) Purchase the new fuel tube and take out the fuel tube connector from its pipe.
Part No. 23901-21020

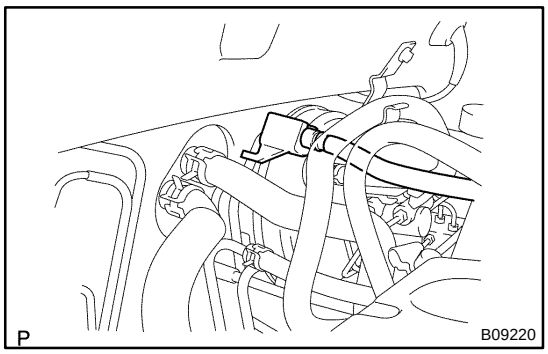

(d) Remove the fuel pipe clamp.

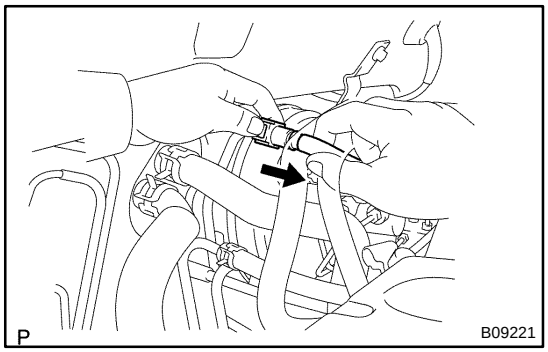

(e) Disconnect the fuel tube (fuel tube connector) from the fuel pipe.

CAUTION:

- **Perform disconnecting operations of the fuel tube connector (quick type) after observing the precautions.**
- **As there is retained pressure in the fuel pipe line, prevent if from splashing inside the engine comportment.**

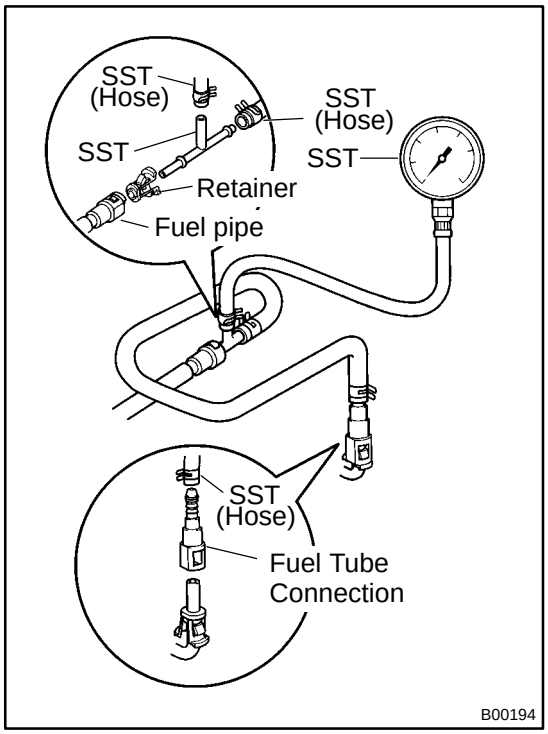

(f) Install SST (pressure gauge) as shown in the illustration by using SST and fuel tube connector.
SST 09268-41047 (95336-08070), 09268-45014 (09268-41200, 09268-41220, 09268-41250)

(g) Wipe off any splattered gasoline.

(h) Reconnect the negative (-) terminal cable to the battery.

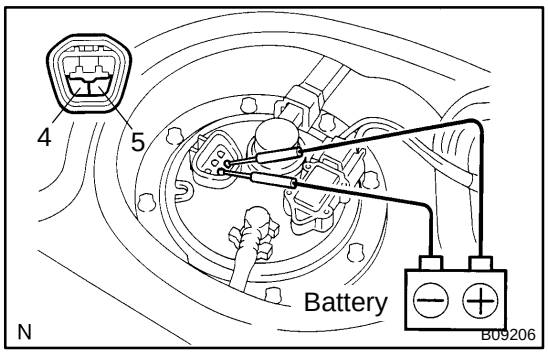

(i) Connect the TOYOTA hand-held tester to the DLC3.

If you have no TOYOTA hand-held tester, connect the positive (+) lead from the battery to terminal 4 of the connecter, and the negative (-) lead to terminal 5.

(j) Measure the fuel pressure.

Fuel pressure:

301 - 347 kPa (3.1 - 3.5 kgf/cm^2, 44 - 50 psi)

If pressure is high, replace the fuel pressure regulator.

If pressure is low, check the Fuel hoses and connections, Fuel pump, Fuel filter, and Fuel pressure regulator.

(k) Disconnect the TOYOTA hand- held tester from the DLC3.

(l) Start the engine.

(m) Measure the fuel pressure at idle.

Fuel pressure:

301 - 347 kPa (3.1 - 3.5 kgf/cm^2, 44 - 50 psi)

(n) Stop the engine.

(o) Check that the fuel pressure remains as specified for 5 minutes after the engine has stopped.

Fuel pressure:

147 kPa (1.5 kgf/cm^2, 21 psi) or more

If pressure is not as specified, check the fuel pump, pressure regulator and/or injectors.

(p) After checking fuel pressure, disconnect the negative (-) terminal cable from the battery and carefully, remove the SST and fuel tube connector to prevent gasoline from splashing.

SST 09268-41047 (95336-08070), 09268-45014 (09268-41200, 09268-41220, 09268-41250)

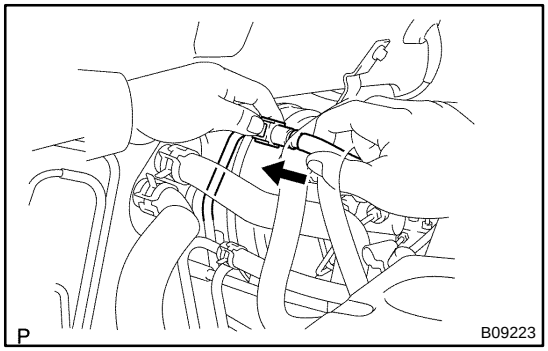

(q) Reconnect the fuel tube (fuel tube connector).

CAUTION:

Perform connecting operations of the fuel tube connector (quick type) after observing the precautions.

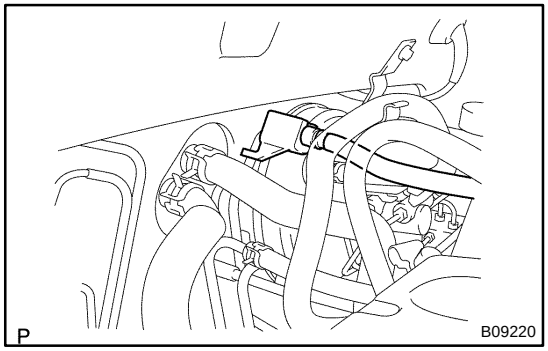

(r) Install the fuel pipe clamp.

(s) Reconnect the negative (-) terminal cable to the battery.

(t) Check for fuel leakage.

3. REMOVE REAR SEAT CUSHION

4. REMOVE FLOOR SERVICE HOLE COVER

5. DISCONNECT FUEL PUMP & SENDER GAUGE CONNECTOR

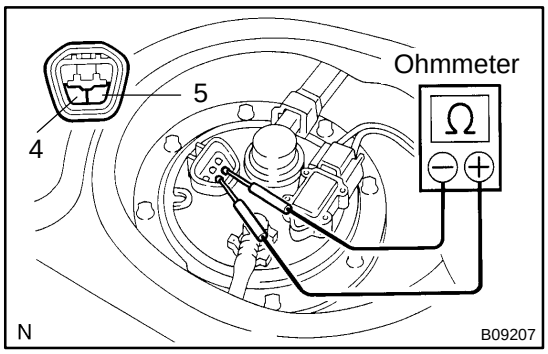

6. INSPECT FUEL PUMP RESISTANCE

Using an ohmmeter, measure the resistance between terminals 4 and 5.

Resistance:

0.2 - 3.0 Ω at 20˚C (68 ˚F)

If the resistance is not as specified, replace the fuel pump.

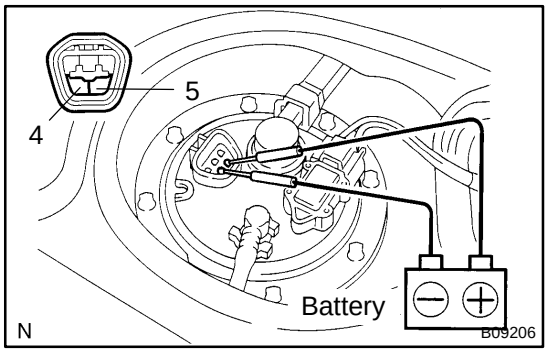

7. INSPECT FUEL PUMP OPERATION

Connect the positive (+) lead from the battery to terminal 4 of the connector and the negative (-) terminal 5. Check that the pump operates.

NOTICE:

- **These tests must be done quickly (within 10 seconds) to prevent the coil burning out.**
- **Keep fuel pump as far away from the battery as possible.**
- **Always do the switching at the battery side.**

If operation is not as specified, replace the fuel pump or lead wire.

8. RECONNECT FUEL PUMP & SENDER GAUGE CONNECTOR

9. REINSTALL FLOOR SERVICE HOLE COVER

10. REINSTALL REAR SEAT CUSHION

SF16N-01

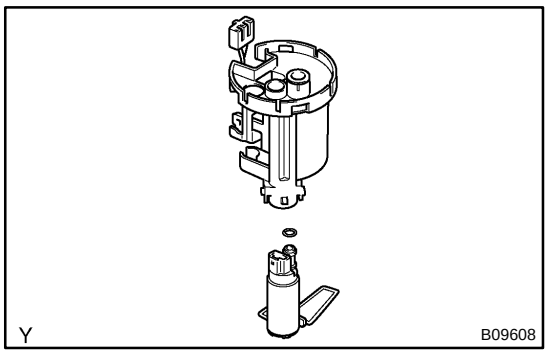

REASSEMBLY

1. INSTALL FUEL PUMP

Connect the fuel pump to the fuel filter.

2. INSTALL FUEL PRESSURE REGULATOR

(a) Install the O-ring to the pressure regulator.

HINT:

Apply a light coat of gasoline to a new O-ring, and install it to the pressure regulator.

(b) Connect the pressure regulator to the fuel filter.

3. INSTALL NO. 1 FUEL SUCTION SUPPORT

(a) Connect the fuel pump harness to the No. 1 fuel suction support and fuel pump.

(b) Install the No. 1 fuel suction support to the fuel filter.

(c) Connect the fuel sender gauge connector and earth plate.

4. INSTALL NO. 2 FUEL SUCTION SUPPORT

(a) Install the rubber cushion.

(b) Install the No. 2 fuel suction support to the No. 1 fuel suction support.

5. INSTALL VAPOR PRESSURE SENSOR

Install the vapor pressure sensor and connect the joint clip to the No. 1 fuel suction support.

SF09A-06

REMOVAL

CAUTION:

Do not smoke or work near an open flame when working on the fuel pump.

1. REMOVE REAR SEAT CUSHION

2. REMOVE FLOOR SERVICE HOLE COVER

(a) Take out the floor carpet.

(b) Remove the service hole cover.

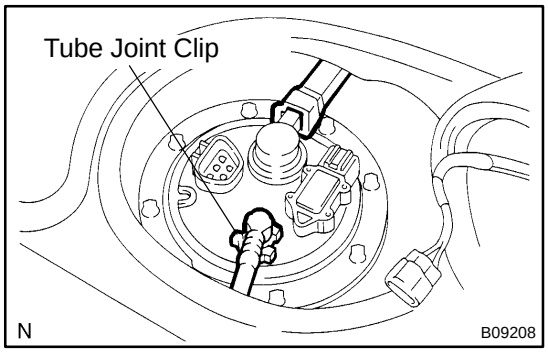

3. DISCONNECT FUEL PUMP & SENDER GAUGE CONNECTOR

4. DISCONNECT FUEL TUBE

(a) Wash away the mud, dust and the likes on the fuel suction plate with water.

(b) Pull off the tube joint clip form the fuel suction plate.

(c) Disconnect the fuel tube from the fuel pump assembly.

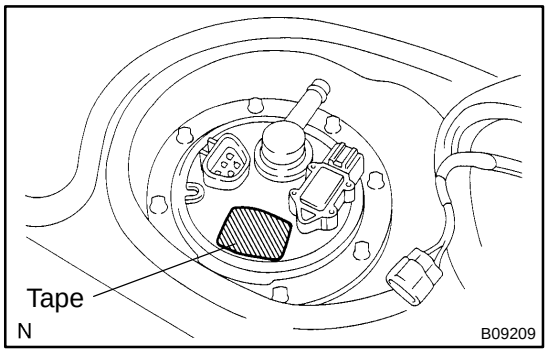

(d) Affix the tape in order to prevent the port portion from the dust.

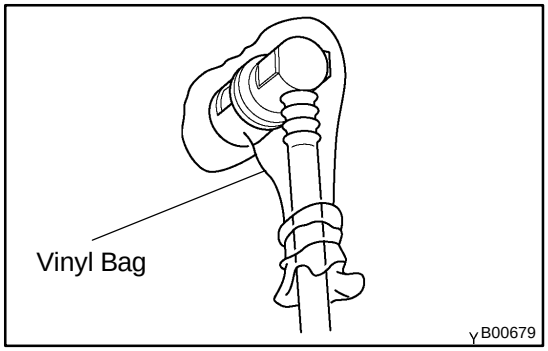

(e) Prevent the disconnected fuel tube from damaging and mixing foreign objects by covering them with a vinyl bag.

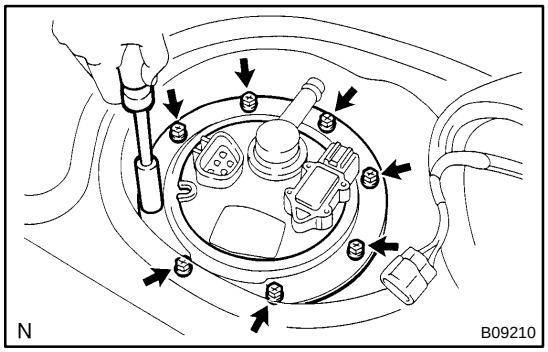

5. REMOVE FUEL PUMP ASSEMBLY FROM FUEL TANK

(a) Remove the 8 bolts and fuel tank vent tube set plate.
Torque: 4 N·m (40 kgf·cm, 35 in.·lbf)

(b) Pull out the fuel pump assembly.

NOTICE:

- **Do not damage the fuel pump filter.**
- **Be careful that the arm of the sender gauge should not bent.**

(c) Remove the gasket from the pump assembly.

HEATED OXYGEN SENSOR

SF174-01

COMPONENTS

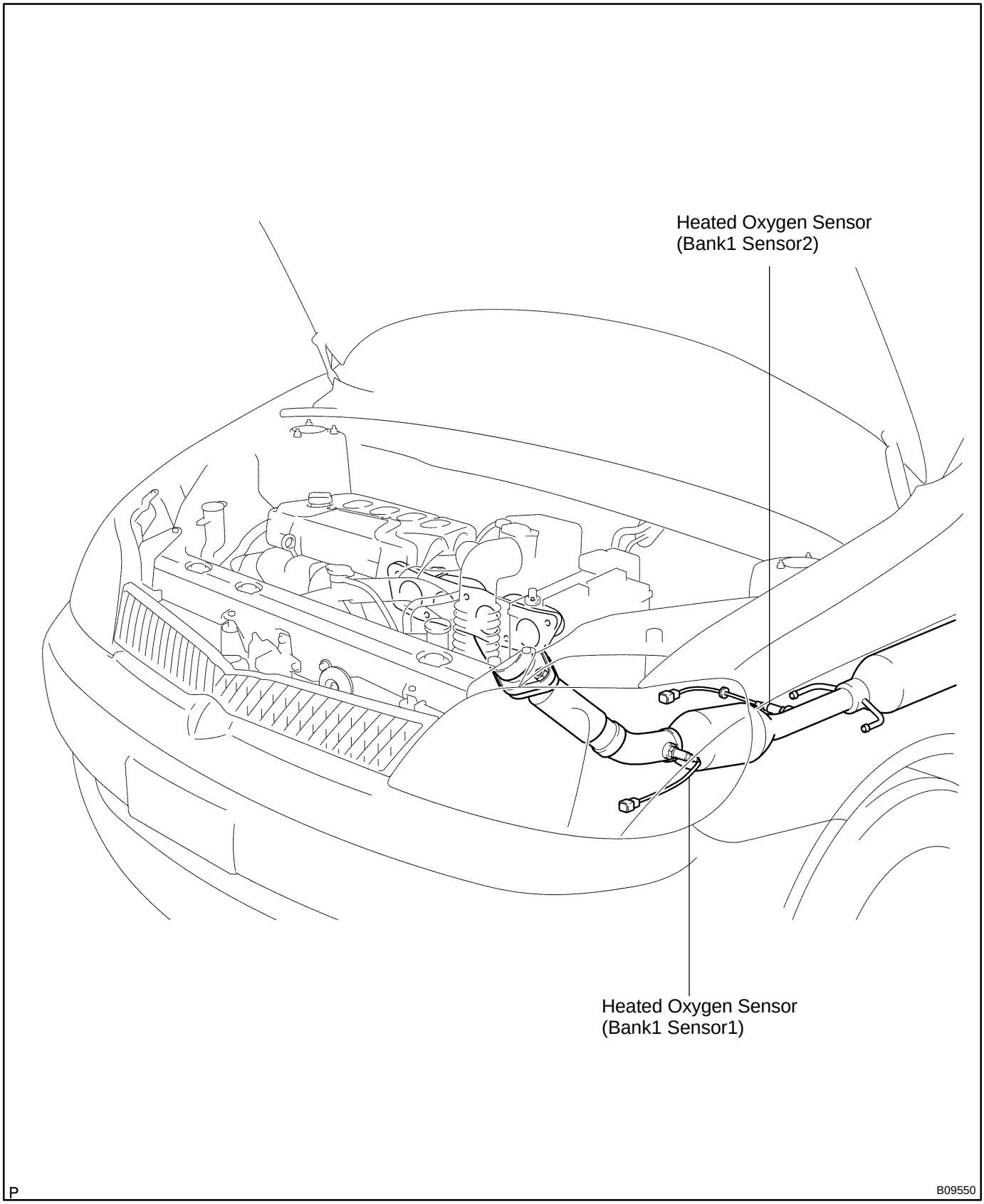

SF0AA-04

INSPECTION

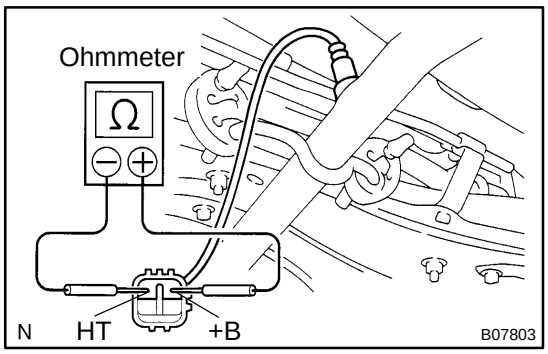

1. INSPECT HEATER RESISTANCE OF HEATED OXYGEN SENSOR (Bank1 Sensor1)

(a) Disconnect the oxygen sensor connector.

(b) Using an ohmmeter, measure the resistance between the terminals +B and HT.

Resistance:

11 - 16 Ω at 20˚C (68˚F)

If the resistance is not as specified, replace the sensor.

Torque: 44 N·m (450 kgf·cm, 31 ft·lbf)

(c) Reconnect the oxygen sensor connector.

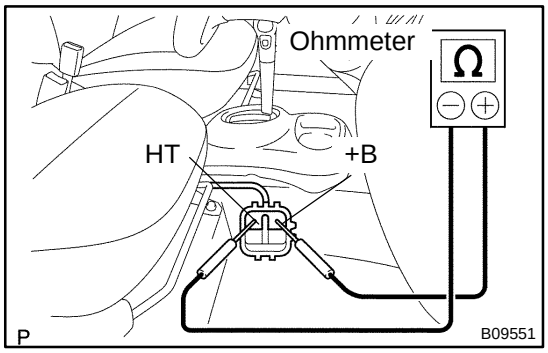

2. INSPECT HEATER RESISTANCE OF HEATED OXYGEN SENSOR (Bank1, Sensor2)

(a) Remove the passenger's seat.

(b) Take out the floor carpet.

(c) Disconnect the oxygen sensor connector.

(d) Using an ohmmeter, measure the resistance between the terminals +B and HT.

Resistance:

11 - 16 Ω at 20˚C (68˚F)

If the resistance is not as specified, replace the sensor.

Torque: 44 N·m (450 kgf·cm, 31 ft·lbf)

(e) Reconnect the oxygen sensor connector.

(f) Resistance the floor carpet.

(g) Reinstall the passenger's seat.

SF09V-03

COMPONENTS

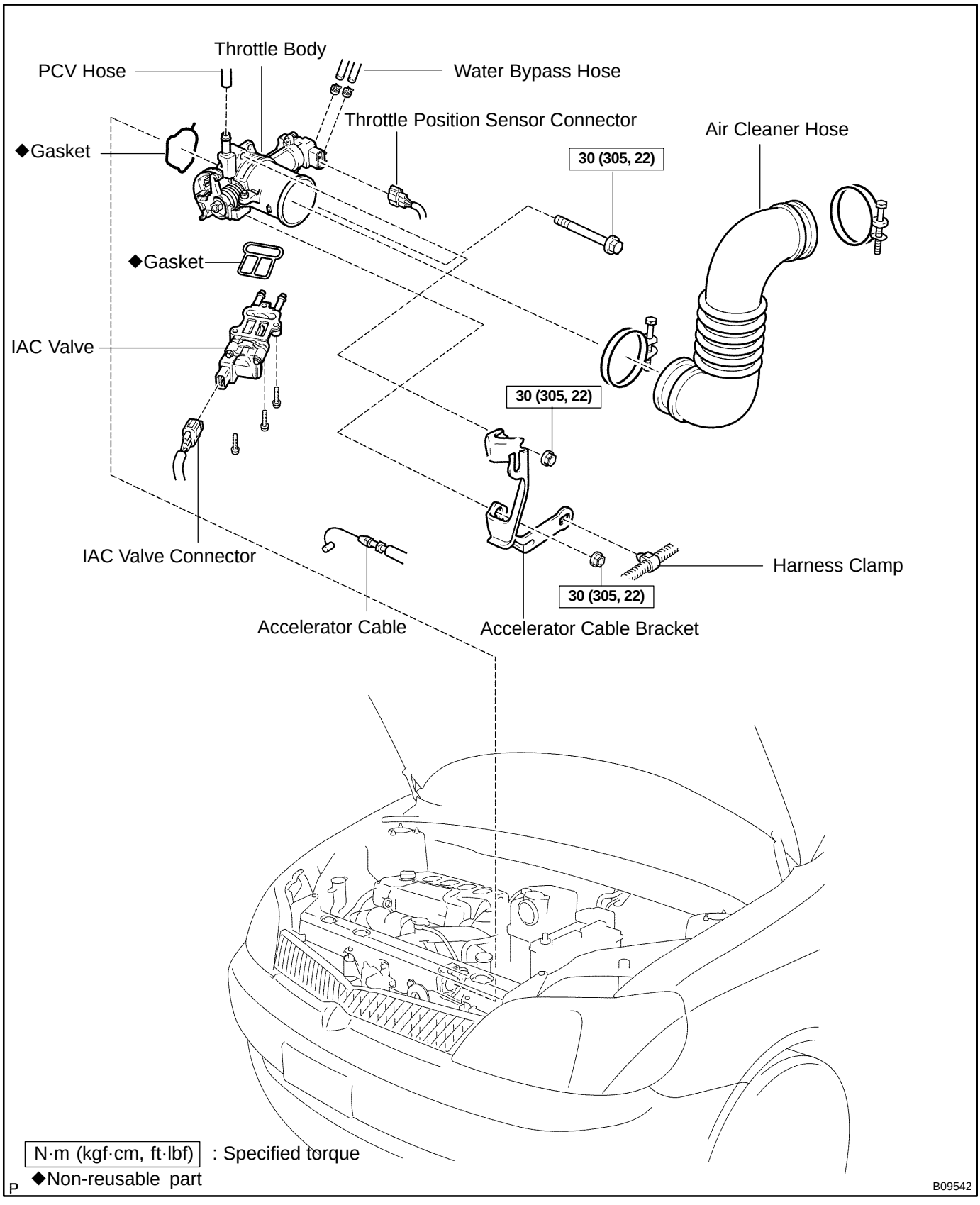

SF09X-05

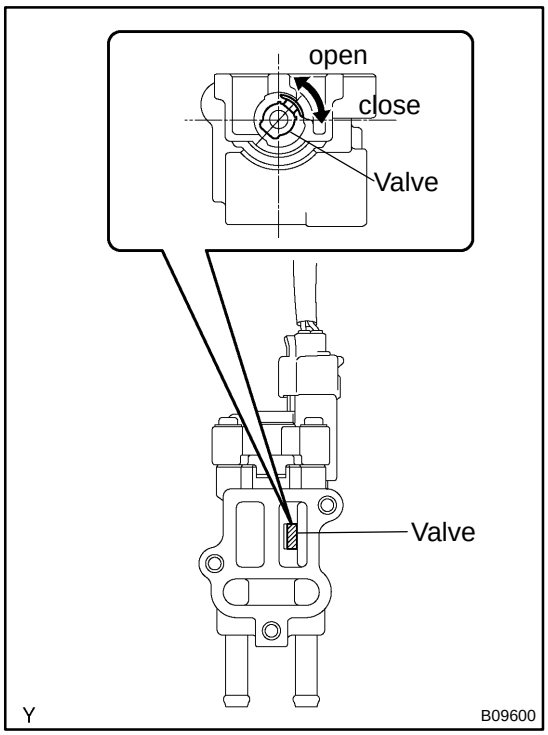

INSPECTION

INSPECT IAC VALVE OPERATION

(a) Check that the IAC valve is half opened.
(b) Connect the IAC valve connector to the IAC valve.
(c) Disconnect the ECT sensor connector from the ECT sensor.
(d) Turn the ignition switch ON.
(e) Check that the IAC valve moves.

HINT:

Repeat connecting and disconnecting of IAC valve connector several times and check the operation of the valve.

If operation is not as specified, replace the IAC valve.

(f) Turn the ignition switch OFF.
(g) Connect the ECT sensor connector to the ECT sensor.
(h) Disconnect the IAC valve connector from the IAC valve.

SF09Y-01

INSTALLATION

Installation is in reverse order of removal (See page SF-39).

HINT:

Install the IAC valve with a new gasket.

IDLE AIR CONTROL (IAC) VALVE

SF09U-04

ON-VEHICLE INSPECTION

INSPECT IAC VALVE OPERATION

(a) Initial conditions:
- Engine at normal operating temperature
- Idle speed set correctly
- Transmission in neutral
- A/C switch OFF

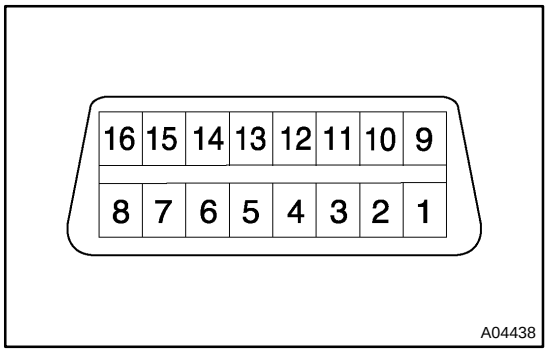

(b) Using SST, connect terminals TC and CG of the DLC3.
SST 09843-18020

(c) After engine speed are kept at 900 - 1,300 rpm for 5 seconds, check that they return to idle speed.

If the rpm operation is not as specified, check the IAC valve, wiring and ECM.

(d) Remove the SST from the DLC3.
SST 09843-18020

SF09W-05

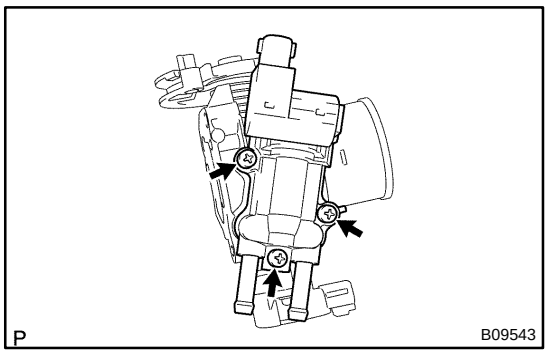

REMOVAL

1. REMOVE THROTTLE BODY
(See page SF-34)

2. REMOVE IAC VALVE

Remove the 4 screws, IAC valve and gasket.

SF09I-05

COMPONENTS

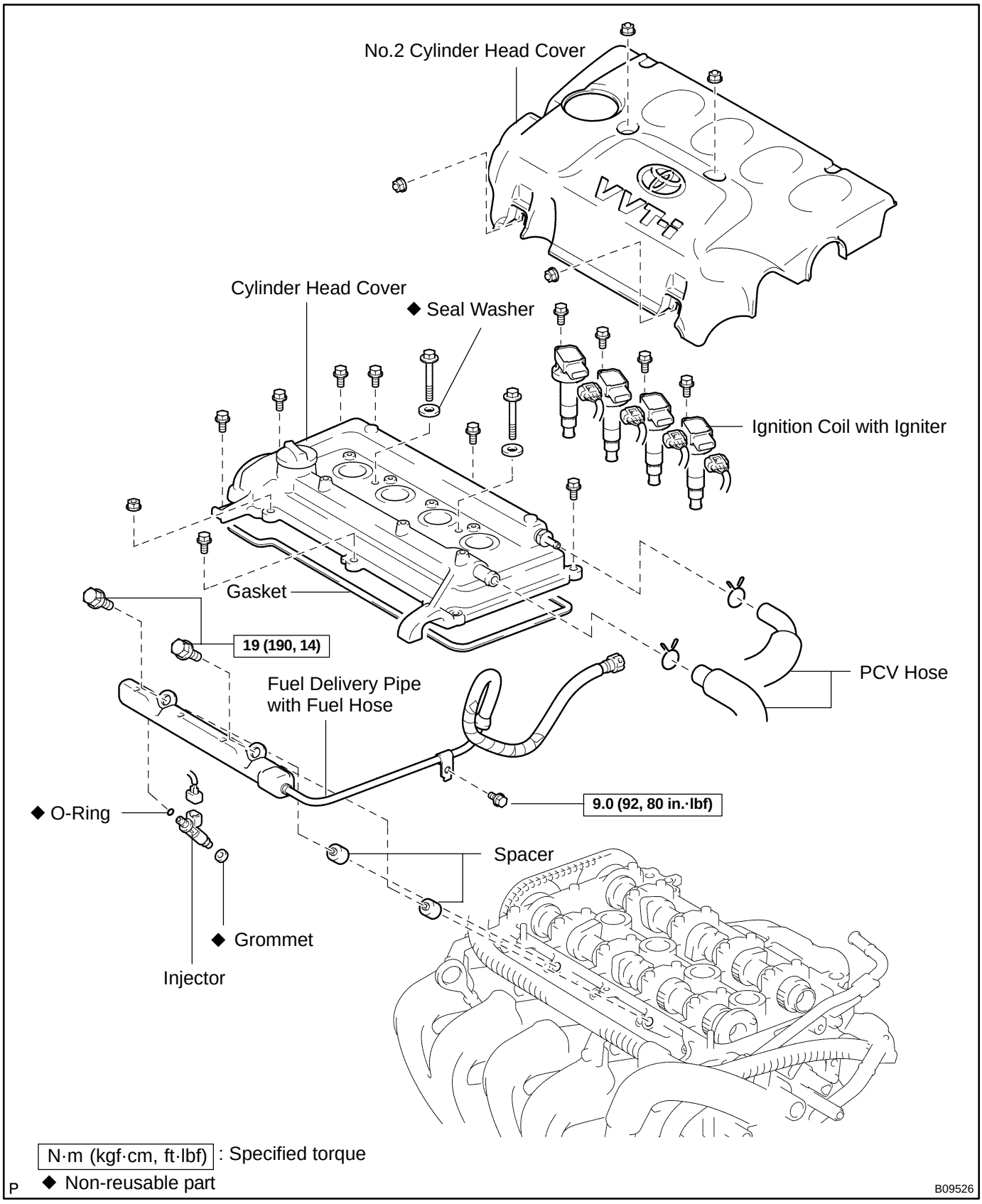

SF09K-07

INSPECTION

1. INSPECT INJECTOR INSPECTION

CAUTION:

Keep injector clear of sparks during the test.

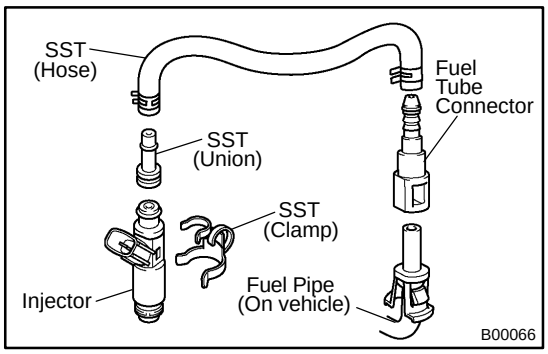

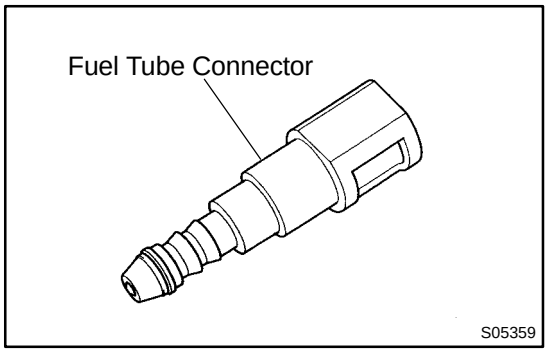

(a) Purchase the new fuel tube and take out the fuel tube connector from its pipe.
Part No. 23901-22010

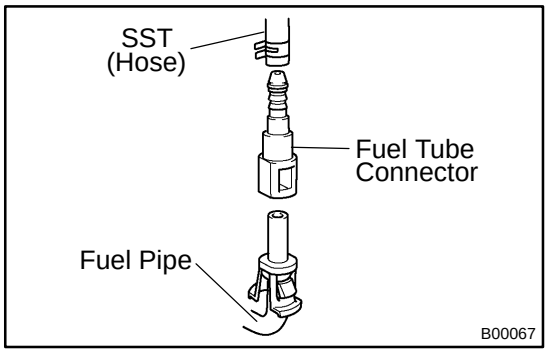

(b) Connect SST (hose) and fuel tube connector to the fuel pipe.
SST 09268-41047

CAUTION:

Perform connecting operations of the fuel tube connector (quick type) after observing the precautions.

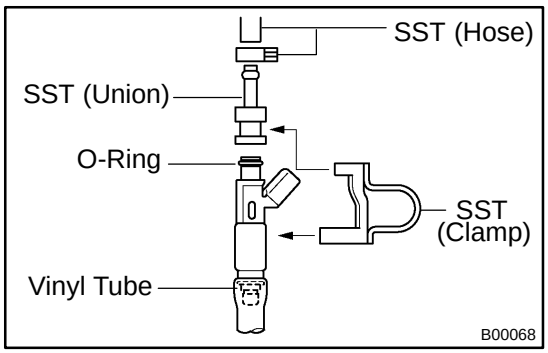

(c) Install the grommet and O-ring to the injector.
(d) Connect SST (union and hose) to the injector, and hold the injector to prevent gasoline from splashing out.
SST 09268-41047
(e) Put the injector into a graduated cylinder.

HINT:

Install a suitable vinyl tube onto the injector to prevent gasoline from splashing out.

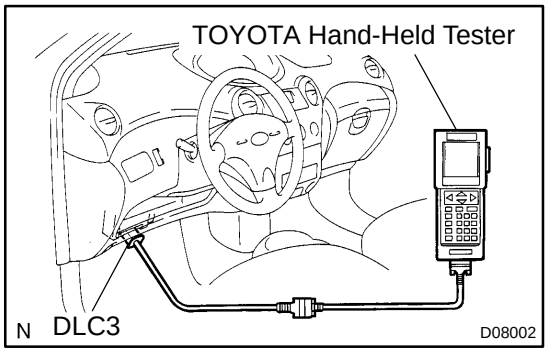

(f) Connect the TOYOTA hand-held tester to the DLC3.
(g) Turn the ignition switch ON and TOYOTA hand-held tester main switch ON.

NOTICE:

Do not start the engine.

(h) Select the active test mode on the TOYOTA hand-held tester.
(i) Please refer to the TOYOTA hand-held tester operator's manual for further details.

(j) If you have no TOYOTA hand-held tester, connect the positive (+) and negative (-) leads from the battery to the fuel pump connector.
(See page SF-18)

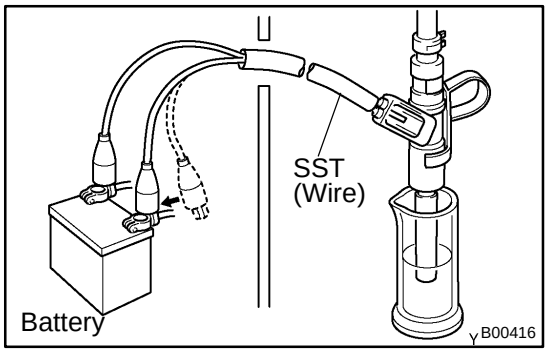

(k) Connect SST (wire) to the injector and battery for 15 seconds, and measure the injection volume with a graduated cylinder. Test each injector 2 or 3 times.
SST 09842-30080
Volume:
47 - 58 cm^3 (2.7 - 3.3 cu in.) per 15 sec.
Difference between each injector:
10 cm^3 (0.6 cu in.) or less

If the injection volume is not as specified, replace the injector.

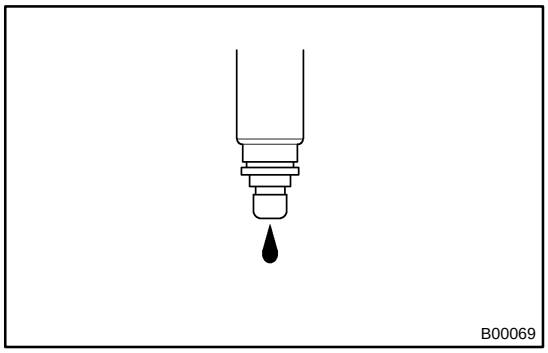

2. INSPECT LEAKAGE

(a) In the condition above, disconnect the test probes of SST (wire) from the battery and check the fuel leakage from the injector.
SST 09842-30080
Fuel drop:
1 drop or less per 12 minutes

(b) Turn the ignition switch to LOCK.

(c) Disconnect the negative (-) terminal cable from the battery.

(d) Remove the SST and fuel tube connector.
SST 09268-41047

CAUTION:

- **Perform disconnecting operations of the fuel tube connector (quick type) after observing the precautions.**
- **As there is retained pressure in the fuel pipe line, prevent it from splashing inside the engine compartment.**

(e) Disconnect the TOYOTA hand-held tester from the DLC3.

SF16R-01

INSTALLATION

1. INSTALL INJECTORS AND DELIVERY PIPES

(a) Install a new grommet to each injector.

(b) Apply a light coat of spindle oil or gasoline to new O-ring and install them to each injector.

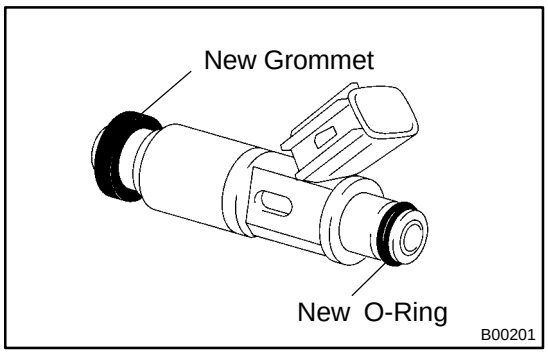

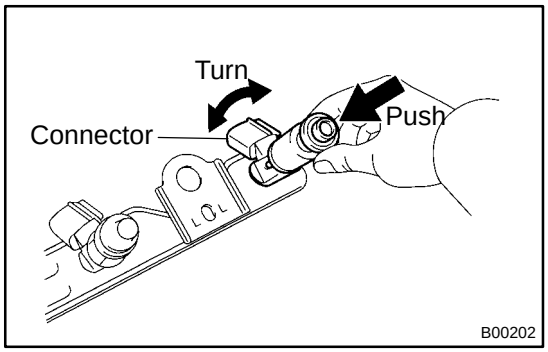

(c) Apply a light coat of spindle oil or gasoline on the place where a delivery pipe touches on O-ring.

(d) While turning the injector clockwise and counterclockwise, push it to the delivery pipes. Install the 4 injectors.

(e) Position the injector connector outward.

(f) Place the 2 spacers in position on the cylinder head.

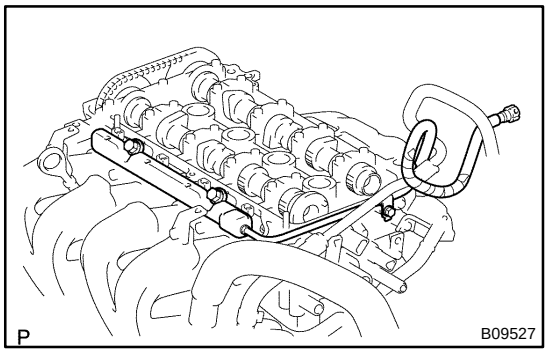

(g) Apply a light coat of spindle oil or gasoline on the place where a cylinder head touches an grommet of the injector.

(h) Place the delivery pipe and fuel pipe together with the 4 injectors in position on the cylinder head.

(i) Temporarily install the 2 bolts holding the delivery pipe to the cylinder head.

(j) Temporarily install the bolt holding the fuel pipe to the cylinder head.

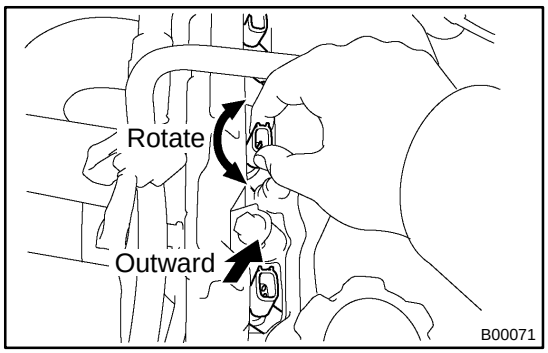

(k) Check that the injectors rotate smoothly.

HINT:

If injectors do not rotate smoothly, the probable cause is incorrect installation of O-ring. Replace the O-ring.

(l) Position the injector connector connector outward.

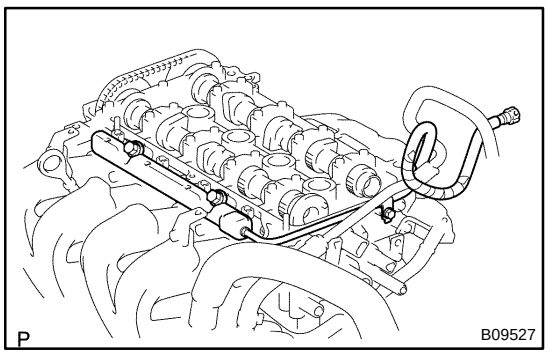

(m) Tighten the 2 bolts holding the delivery pipe to the cylinder head.
Torque: 19 N·m (190 kgf·cm, 14 ft·lbf)

(n) Tighten the bolt holding the fuel pipe to the cylinder head.
Torque: 9.0 N·m (92 kgf·cm, 80 in.·lbf)

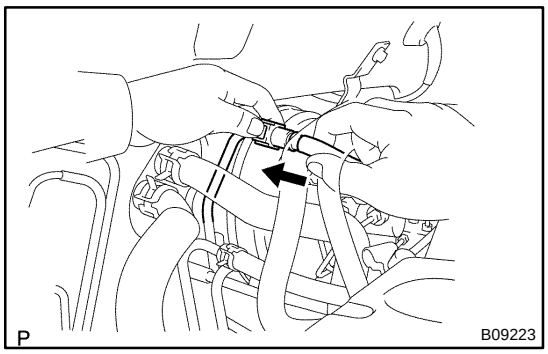

2. CONNECT FUEL TUBE

(a) Connect the fuel tube (fuel tube connector) to the fuel pipe.

CAUTION:

Perform connecting operations of the connector (quick type) after observing the precautions.

(b) Install the fuel pipe clamp.

3. INSTALL WIRE HARNESS PROTECTOR COVER

(a) Install the wire harness protector cover with bolt and 2 nuts.

(b) Connect the PCV hose to cylinder head cover.

4. CONNECT HIGH-TENSION CORDS

Connect high-tension cords to ignition coils.

INJECTOR

SF16P-01

ON-VEHICLE INSPECTION

1. REMOVE NO.2 CYLINDER HEAD COVER

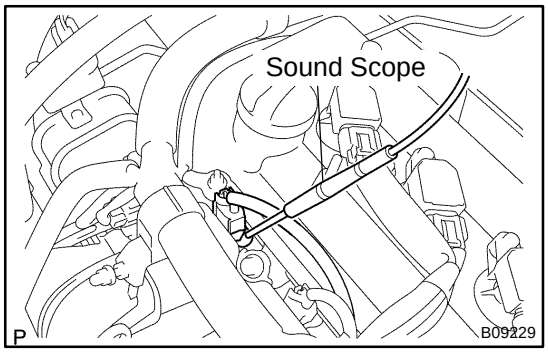

2. CHECK OPERATION SOUND FROM EACH INJECTOR

(a) Connect the PCV hose to cylinder head cover.

(b) With the engine running or cranking, use a sound scope to check that there is normal operating noise in proportion to engine speed.

(c) If you have no sound scope, you can check the injector transmission operation with your finger.

If no sound or unusual sound is heard, check the wiring connector, injector signal from the ECM.

(d) Disconnect the PCV hose from cylinder head cover.

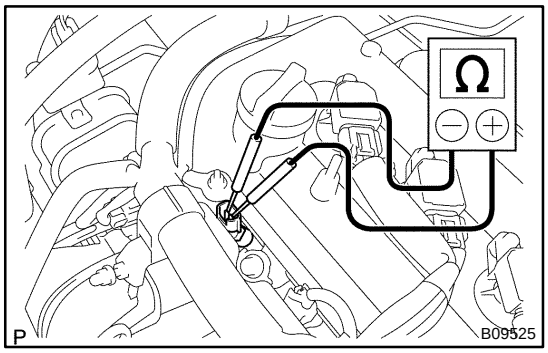

3. INSPECT INJECTOR RESISTANCE

(a) Disconnect the injector connector.

(b) Using an ohmmeter, measure the resistance between the terminals.

Resistance:

13.4 - 14.2 Ω at 20˚C (68˚F)

If the resistance is not as specified, replace the injector.

(c) Reconnect the injector connector.

4. INSTALL WIRE HARNESS PROTECTOR COVER

(a) Install the wire harness protector cover with bolt and 2 nuts.

(b) Connect the PCV hose to cylinder head cover.

SF16Q-01

REMOVAL

1. REMOVE NO.2 CYLINDER HEAD COVER
2. REMOVE CYLINDER HEAD COVER (See page EM-28)

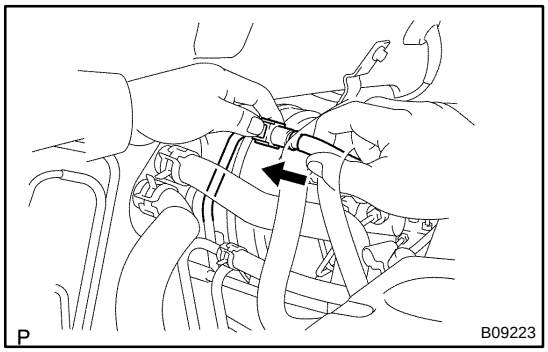

3. DISCONNECT FUEL TUBE

(a) Remove the fuel pipe clamp.

(b) Disconnect the fuel tube (fuel tube connector) from the fuel pipe.

CAUTION:

- **Perform disconnecting operations of the fuel tube connector (quick type) after observing the precautions.**
- **As there is retained pressure in the fuel pipe line, prevent it from splashing inside the engine compartment.**

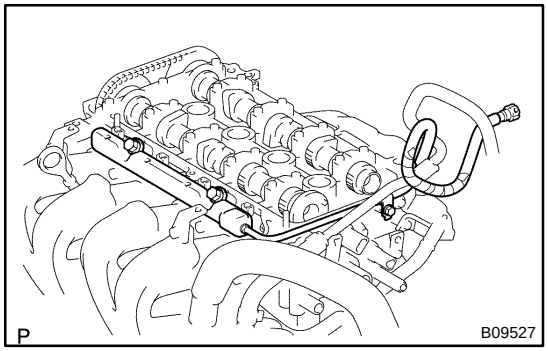

4. REMOVE DELIVERY PIPE AND INJECTORS

NOTICE:

Be careful not to drop the injectors when removing the delivery pipe.

(a) Disconnect the 4 injector connectors from injector.

(b) Remove the 3 bolts and delivery pipe together with the 4 injectors and fuel pipe.

(c) Remove the 2 spacers from the cylinder head.

(d) Pull out the 4 injectors from the delivery pipe.

(e) Remove the O-rings and grommets from each injector.

KNOCK SENSOR

COMPONENTS

SF0A8-03

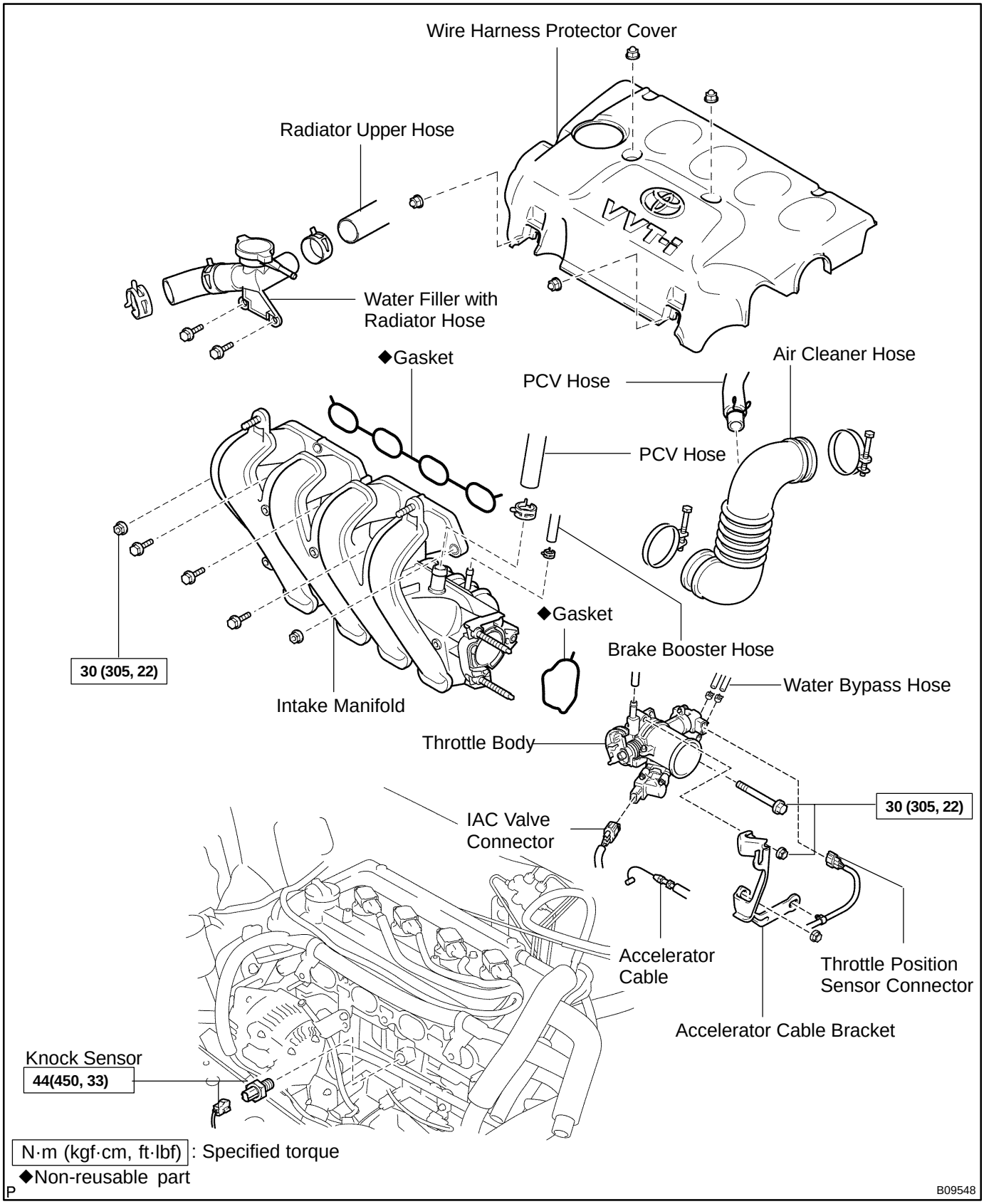

SF0A9-04

INSPECTION

1. **REMOVE THROTTLE BODY**
   (See page SF-34)
2. **REMOVE INTAKE MANIFOLD**
   (See page EM-28)

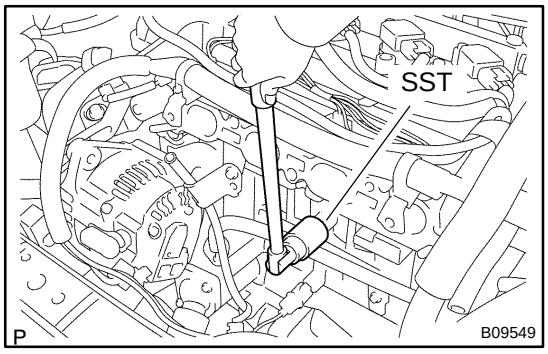

3. **REMOVE KNOCK SENSOR**

(a) Disconnect the knock sensor connector.

(b) Using SST, remove the knock sensor.
SST 09816-30010

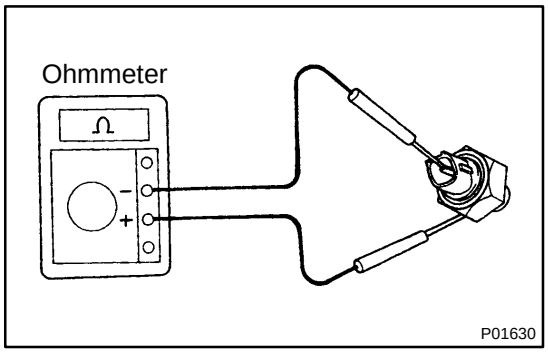

4. **INSPECT KNOCK SENSOR**

Using an ohmmeter, check that there is continuity between the terminal and body.
If there is continuity, replace the sensor.

5. **REINSTALL KNOCK SENSOR**

(a) Using SST, install the knock sensor.
SST 09816-30010

(b) Connect the knock sensor connector.

6. **REINSTALL INTAKE MANIFOLD**
   (See page EM-44)
7. **REINSTALL THROTTLE BODY**
   (See page SF-36)

MASS AIR FLOW (MAF) METER

COMPONENTS

FI0DU-04

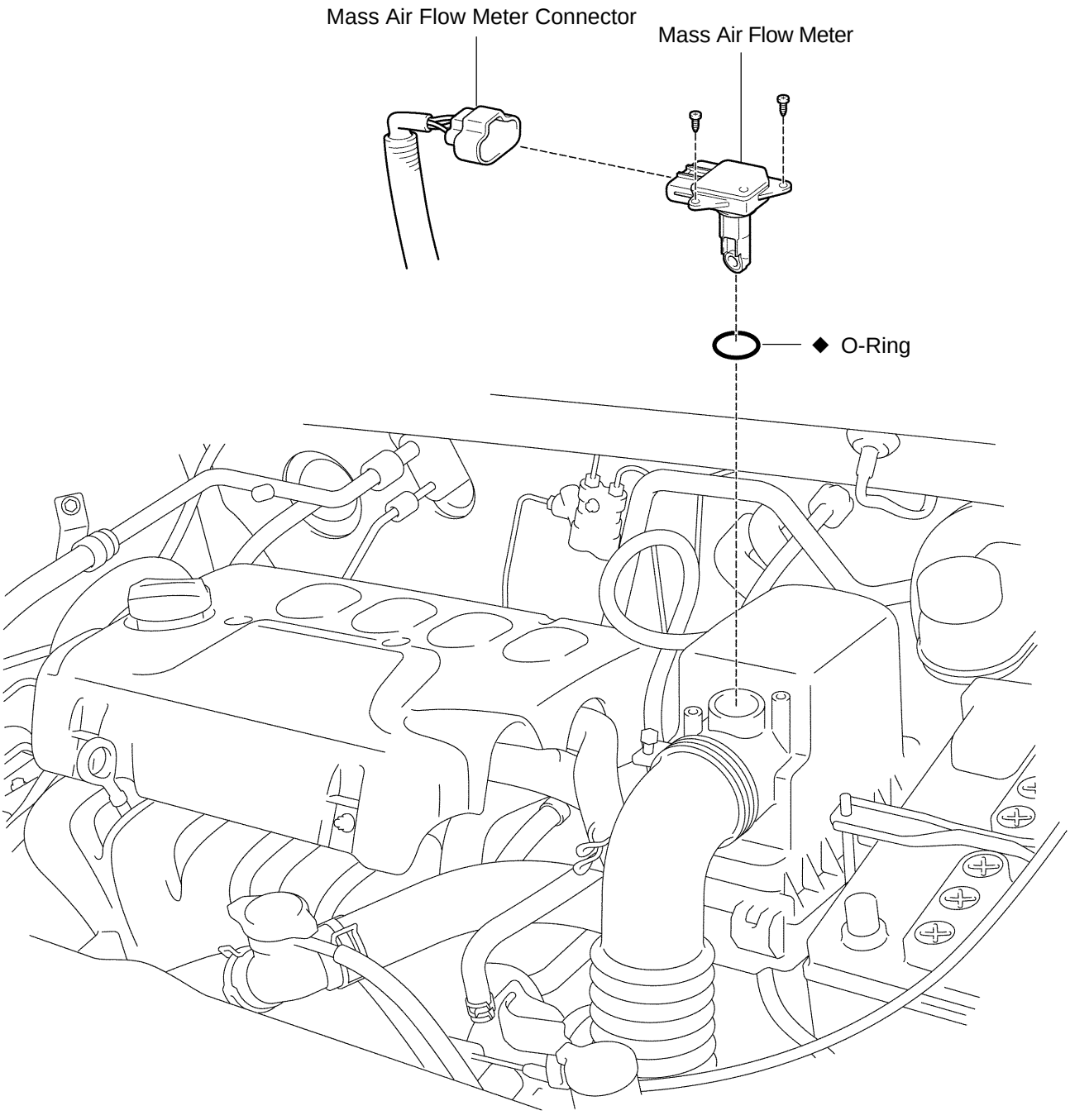

P ◆ Non-reusable part

B09537

FI0M8-04

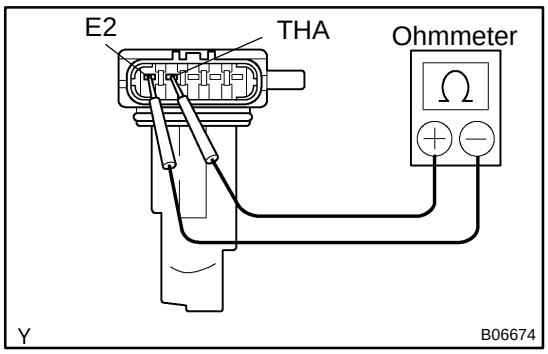

INSPECTION

1. INSPECT MAF METER RESISTANCE

Using an ohmmeter, measure the resistance between terminals THA and E2.

Resistance:

Terminals	Resistance	Temperature
THA - E2	13.6 - 18.4 kΩ	-20 ˚C (-4 ˚F)
THA - E2	2.21 - 2.69 kΩ	20 ˚C (68 ˚F)
THA - E2	0.49 - 0.67 kΩ	60 ˚C (140 ˚F)

If the resistance is not as specified, replace the MAF meter.

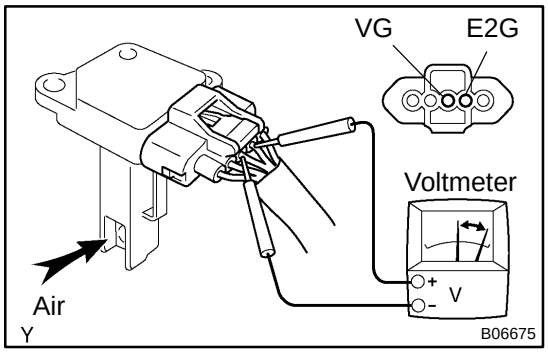

2. INSPECT MAF METER OPERATION

(a) Connect the MAF meter connector.
(b) Turn the ignition switch to ON.
(c) Using a voltmeter, connect the positive (+) tester probe to terminal VG, and negative (-) tester probe to terminal E2G.
(d) Blow air into the MAF meter, and check that the voltage fluctuates.

If operation is not as specified, replace the MAF meter.

(e) Turn the ignition switch LOCK.
(f) Disconnect the MAF meter connector.

FI0M9-04

INSTALLATION

INSTALL MASS AIR FLOW METER

Install the air flow meter and a new O-ring with 2 screws.

FI0M7-04

REMOVAL

REMOVE MASS AIR FLOW METER

Remove the 2 screws, air flow meter and O-ring.

SFI SYSTEM

SF0Z7-03

PRECAUTION

1. BEFORE WORKING ON THE FUEL SYSTEM , DISCONNECT THE NEGATIVE (-) TERMINAL CABLE FROM THE BATTERY

HINT:

Any diagnostic trouble code retained by the computer will be erased when the negative (-) terminal cable is removed from the battery. Therefore, if necessary, read the diagnosis before removing the negative (-) terminal cable from the battery.

2. DO NOT SMOKE OR WORK NEAR AN OPEN FLAME WHEN WORKING ON THE FUEL SYSTEM

3. KEEP GASOLINE AWAY FROM RUBBER OR LEATHER PARTS

4. MAINTENANCE PRECAUTIONS

(a) In event of engine misfire, these precautions should be taken.
  (1) Check proper connection to battery terminals, etc.
  (2) After repair work, check that the ignition coil terminals and all other ignition system lines are reconnected securely.
  (3) When cleaning the engine compartment, be especially careful to protect the electrical system from water.

(b) Precautions when handling oxygen sensor.
  (1) Do not allow oxygen sensor to drop or hit against an object.
  (2) Do not allow the sensor to come into contact with water.

If vehicle is Equipped with Mobile Radio System (HAM, CB, etc.)

If the vehicle is equipped with a mobile communication system, refer to the precaution in the IN section.

5. AIR INDUCTION SYSTEM

(a) Separation of the engine oil dipstick, oil filler cap, PCV hose, etc. may cause the engine to run out of turn.

(b) Disconnection, looseness or cracks in the parts of the air induction system between the throttle body and cylinder head will allow air suction and cause the engine to run out of turn.

6. ELECTRONIC CONTROL SYSTEM

(a) Before removing SFI wiring connectors, terminals, etc., first disconnect the power by either turning the ignition switch to LOCK or disconnecting the negative (-) terminal cable from the battery.

HINT:

Always check the diagnostic trouble code before disconnecting the negative (-) terminal cable from the battery.

(b) When installing the battery, be especially careful not to incorrectly connect the positive (+) and negative (-) cables.
(c) Do not permit parts to receive a severe impact during removal or installation. Handle all SFI parts carefully, especially the ECM.
(d) Be careful during troubleshooting as there are numerous transistor circuit, and even slight terminal contact can cause further troubles.
(e) Do not open the ECM cover.
(f) When inspecting during rainy weather, take care to prevent entry of water. Also, when washing the engine compartment, prevent water from getting on the SFI parts and wiring connectors.
(g) Parts should be replaced as an assembly.
(h) Care should be taken when pulling out and inserting wiring connectors.
  (1) Release the lock and pull out the connector, pulling on the connectors.
  (2) Fully insert the connector and check that it is locked.

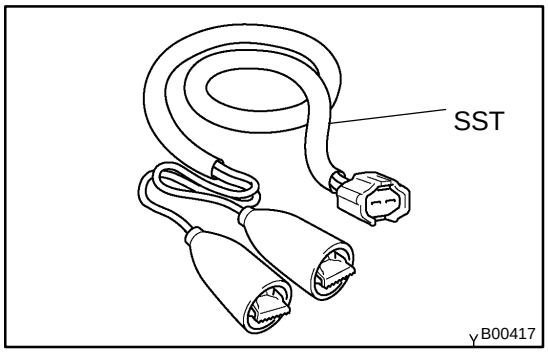

(i) Use SST for inspection or test of the injector or its wiring connector.
SST 09842-30080

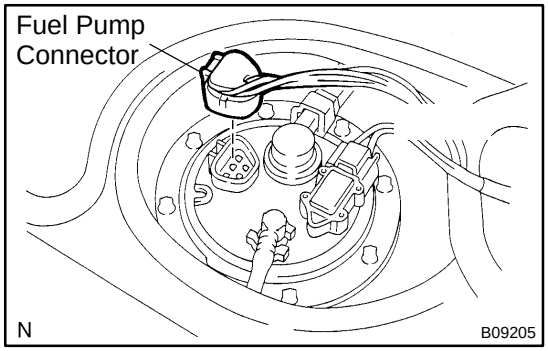

7. FUEL SYSTEM

(a) When disconnecting the high fuel pressure line, a large amount of gasoline will spill out, so observe these procedures.
  (1) Disconnect the fuel pump connector.
  (2) Start the engine. After the engine has stopped on its own, turn the ignition switch to LOCK.
  (3) Disconnect the fuel tube (See page SF-1 1).
  (4) Drain the fuel remained inside the fuel tube.

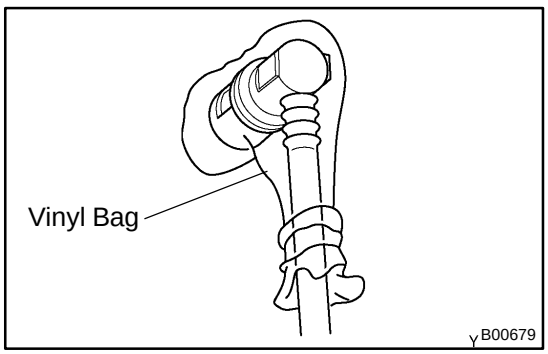

  (5) Prevent the disconnected fuel tube from damaging and mixing foreign objects by covering them with a vinyl bag.

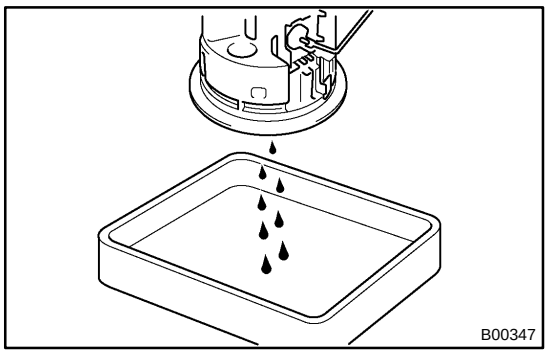

(6) Put a container under the connection.

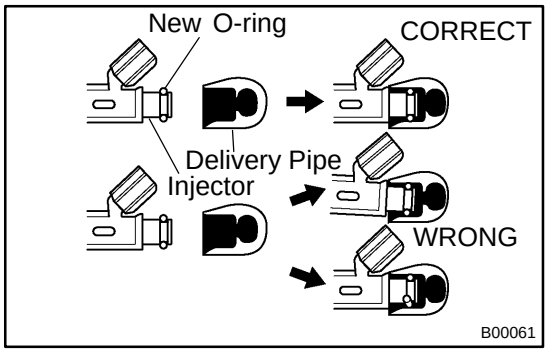

(b) Observe these precautions when removing and installing the injector.
(1) Never reuse the O-ring.
(2) When placing a new O-ring on the injector, take care not to damage it in any way.
(3) Coat a new O-ring with spindle oil or gasoline before installing never use engine, gear or brake oil.

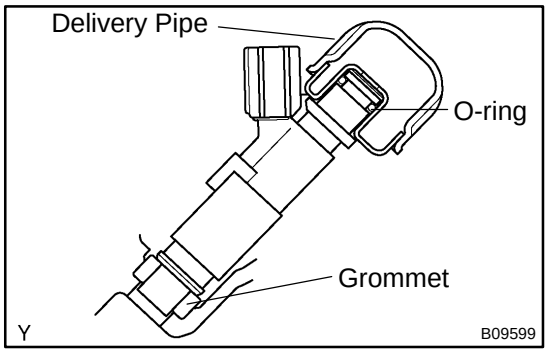

(c) Install the injector to the delivery pipe and cylinder head, as shown in the illustration. Before in installing the injector, must apply spindle oil or gasoline on the place where a delivery pipe or a cylinder head touches on O-ring or grommet of the injector.

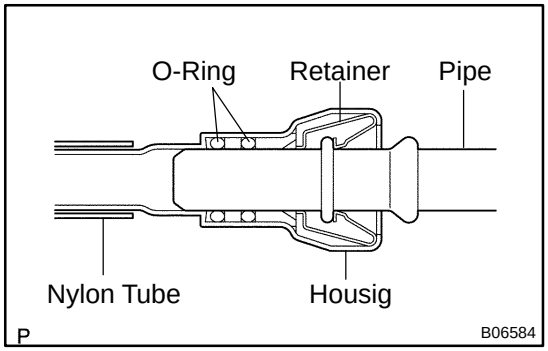

(d) Observe these precautions when disconnecting the fuel delivery pipe. The structure of the metallic connector is shown as left.
(1) Remove the fuel pipe clamp.

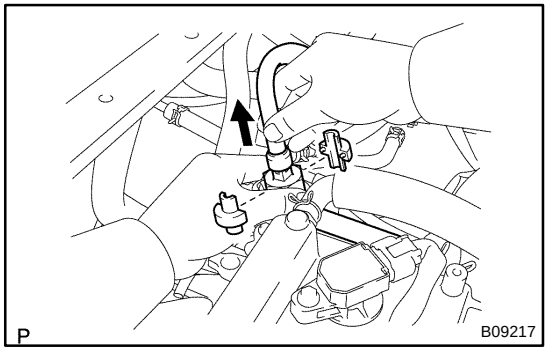

(2) Get the metallic connector of the fuel tube assembly, pull it out towards the rear and hold it as it is.
(3) Assemble SST to the connection as shown.
SST 09268-21010

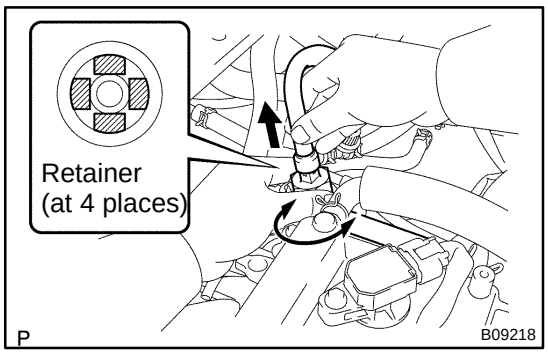

(4) Turn SST, align the retainers inside the connector with SST chamfered parts and incert SST into the connector.

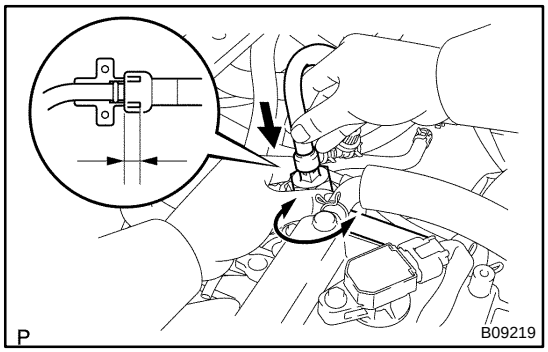

(5) Hold SST as it at step 4, push the connector towards SST to put the retainers on SST champfered parts.
(6) Slide SST and the connector together towards the fuel tube assembly.

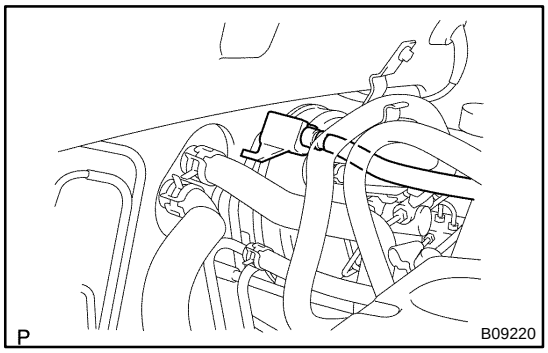

(e) Observe these precautions when disconnecting the fuel tube connector (quick type).
(1) Remove the fuel pipe clamp.
(2) Check if there is any dirt like mud on the pipe and around the connector before disconnecting them and clean the dirt away.

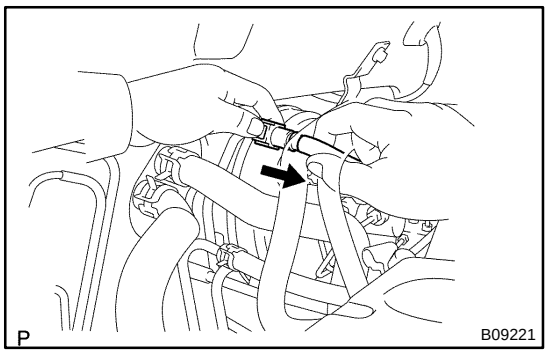

(3) Be sure to disconnect with hands.
(4) When the connector and the pipe are stuck, pinch the retainer between the hands, push and pull the connector to free to disconnect and pull it out. Do not use any tool at this time.
(5) Inspect if there is any dirt or the likes on the seal surface of the disconnected pipe and clean it away.

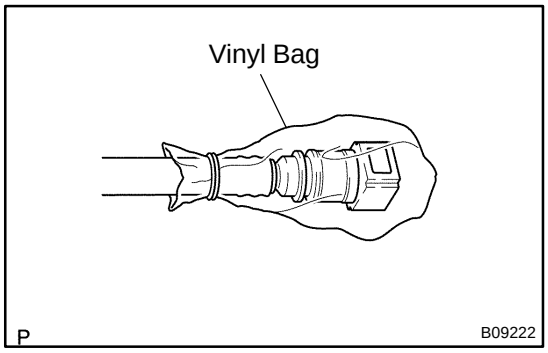

(6) Prevent the disconnected pipe and connector from damaging and mixing foreign objects by covering them with a vinyl bag.

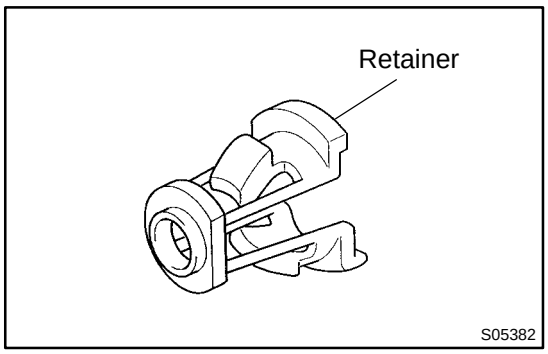

(f) Observe these precautions when connecting the fuel tube connector (quick type).
(1) Do not reuse the retainer removed from the pipe.
(2) Must use hands without using tools when to remove the retainer from the pipe.
(3) Check if there is any damage or foreign objects on the connected part of the pipe.

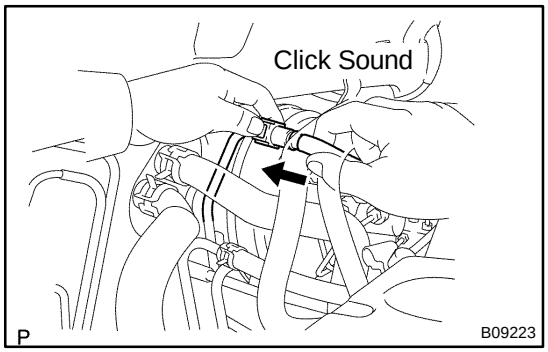

(4) Match the axis of the connector with axis of the pipe, and push in the connector until retainer makes a ”click” sound. In case that the connections is tight, apply little amount of new engine oil on the tip of the pipe.
(5) After having finished the connection, check if the pipe and the connector are securely connected by pulling them.

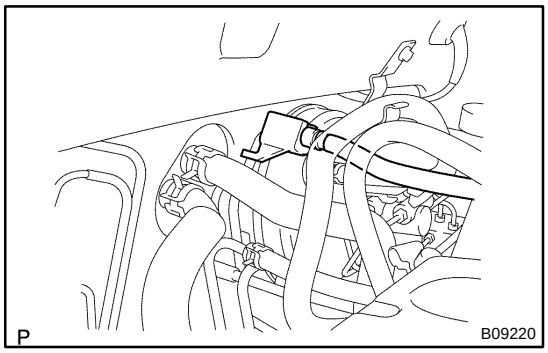

(6) Install the fuel pipe clamp.
(7) Check if there is any fuel leakage.

(g) Observer these precautions when handling nylon tube.
(1) Pay attention not to turn the connected part of the nylon tube and the quick connector with force when connecting them.
(2) Pay attention not to kink the nylon tube.
(3) Do not remove the nylon tube.
(4) Must not close the piping with the nylon tube by bending it.

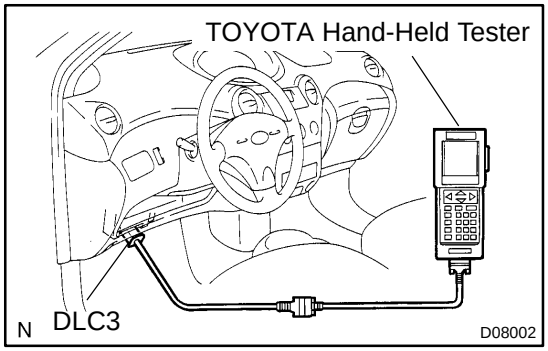

(h) Check that there are no fuel leaks after doing maintenance anywhere on the fuel system.
(1) Connect the TOYOTA hand- held tester to the DLC3.
(2) Turn the ignition switch ON and push TOYOTA hand-held tester main switch ON.
(3) Select the active test mode on the TOYOTA hand-held tester.
(4) Please refer to the TOYOTA hand-held tester operator’s manual for further details.
(5) If you have no TOYOTA hand-held tester, connect the positive (+) and negative (-) leads from the battery to the fuel pump connector.
(See page SF-6)
(6) Check that there are no leaks from any part of the fuel system.
(7) Turn the ignition switch to LOCK.
(8) Disconnect the TOYOTA hand-held tester from the DLC3.

SF09Q-04

COMPONENTS

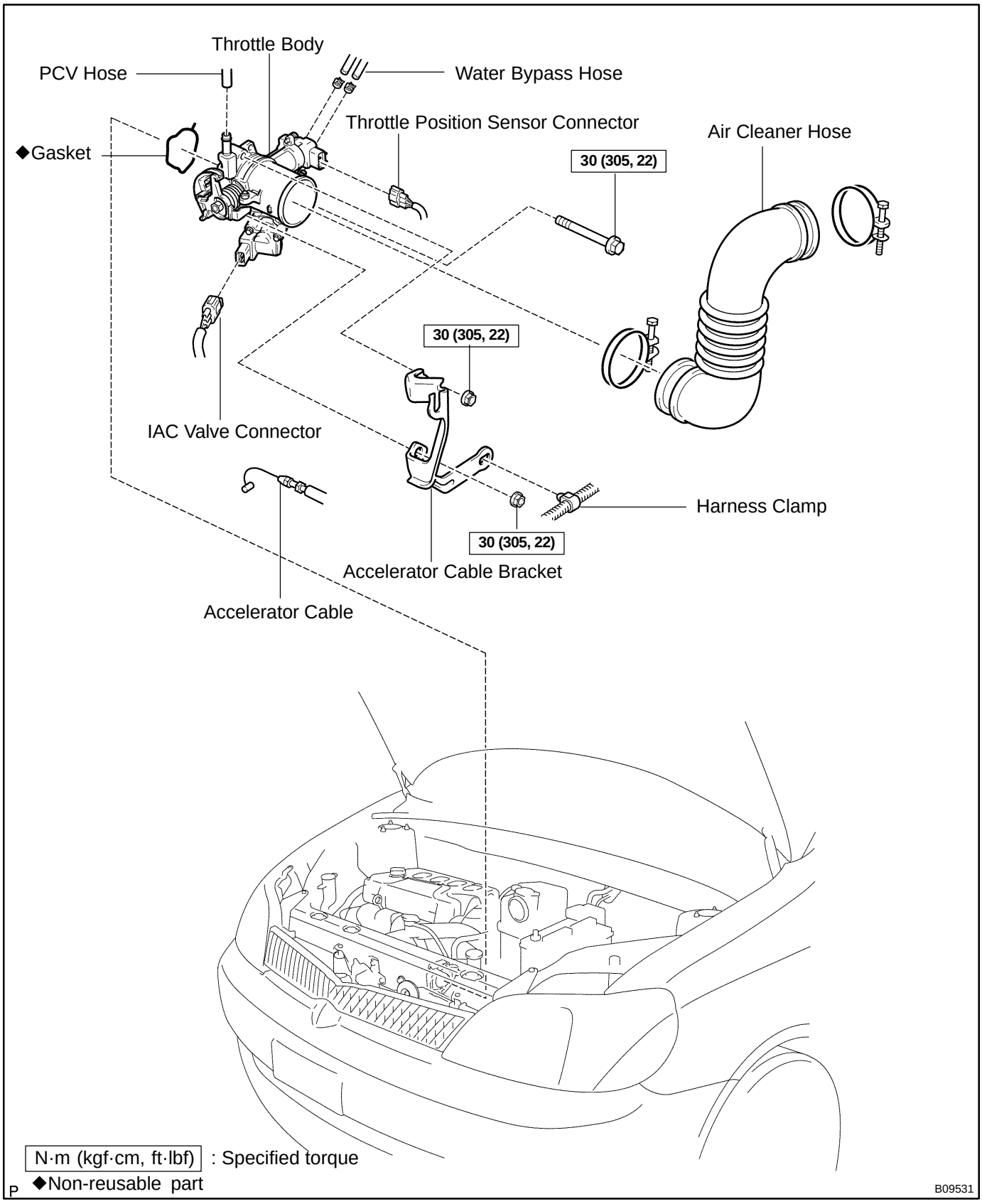

SF09S-06

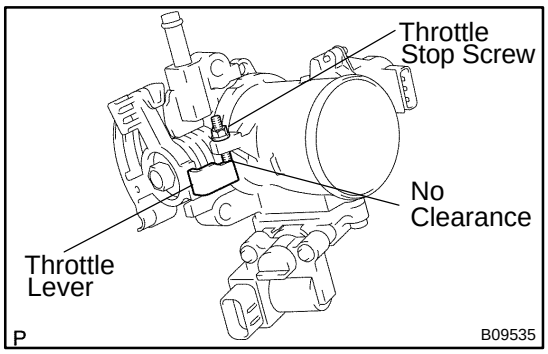

INSPECTION

1. INSPECT THROTTLE VALVE

Check that there is no clearance between the throttle stop screw and throttle lever when the closed throttle position.

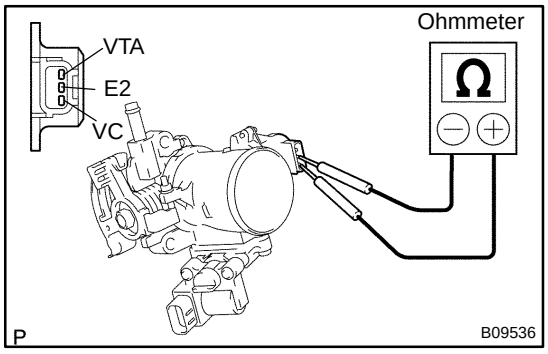

2. INSPECT THROTTLE POSITION SENSOR

Using an ohmmeter, measure the resistance between each terminal.

Clearance between lever and stop screw	Between terminals	Resistance
0 mm (0 in.)	VTA - E2	0.2 - 5.7 kΩ
Throttle valve fully open	VTA - E2	2.0 - 10.2 kΩ
-	VC - E2	2.5 - 5.9 kΩ

SF16T-01

INSTALLATION

1. INSTALL THROTTLE BODY

(a) Install the throttle body and accelerator cable bracket with the bolt and 2 nuts.

Torque: 30 N·m (305 kgf·cm, 22 ft·lbf)

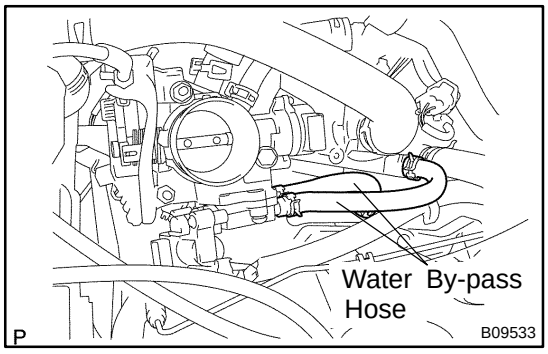

(b) Connect the 2 water bypass hoses to the throttle body.

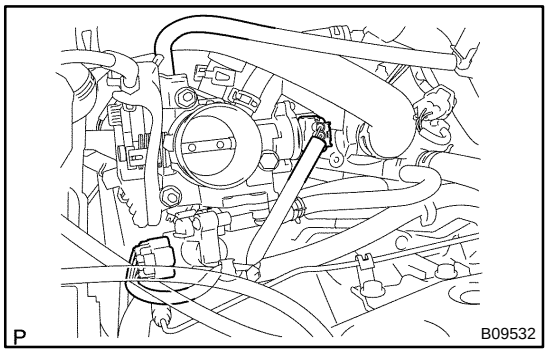

(c) Connect the IAC valve connector.

(d) Connect the throttle position sensor connector.

(e) Connect the PCV hose to throttle body.

2. INSTALL AIR CLEANER HOSE AND CAP

3. FILL RADIATOR WITH ENGINE COOLANT

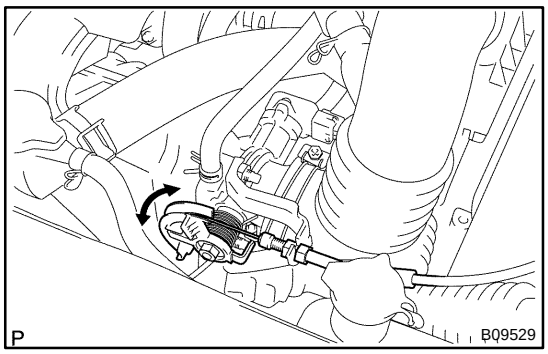

THROTTLE BODY

SF09P-06

ON-VEHICLE INSPECTION

1. INSPECT THROTTLE BODY

Check that the throttle linkage moves smoothly.

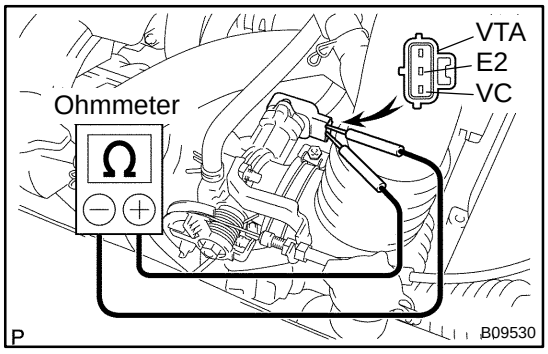

2. INSPECT THROTTLE POSITION SENSOR

(a) Disconnect the throttle position sensor connector.

(b) Using an ohmmeter, measure the resistance between each terminal.

Clearance between lever and stop screw	Between terminals	Resistance
0 mm (0 in.)	VTA - E2	0.2 - 5.7 kΩ
Throttle valve fully open	VTA - E2	2.0 - 10.2 kΩ
-	VC - E2	2.5 - 5.9 kΩ

(c) Reconnect the throttle position sensor connector.

SF16S-01

REMOVAL

1. DRAIN ENGINE COOLANT

2. DISCONNECT ACCELERATOR CABLE

3. REMOVE AIR CLEANER HOSE AND CAP

(a) Loosen the 2 air cleaner hose clamp bolts.

(b) Disconnect the air cleaner hose from the throttle body, and air cleaner cap.

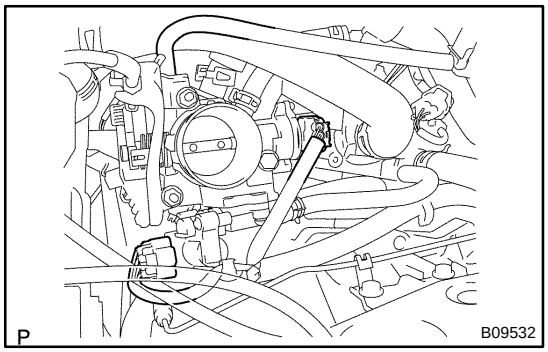

4. REMOVE THROTTLE BODY

(a) Disconnect the throttle position sensor connector.

(b) Disconnect the IAC valve connector.

(c) Disconnect the PCV hose from throttle body.

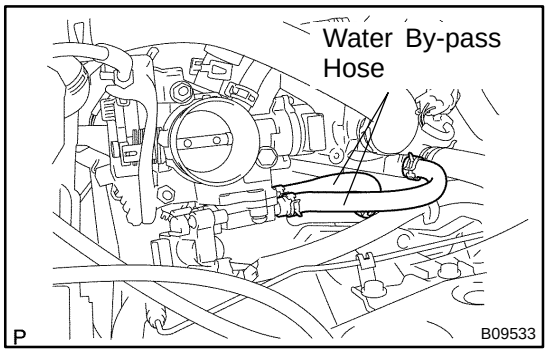

(d) Disconnect the 2 water bypass hoses.

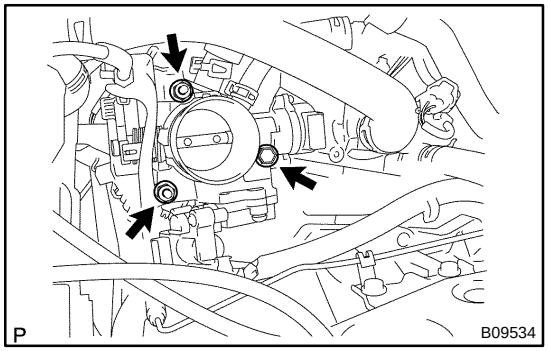

(e) Remove the bolt, 2 nuts, accelerator bracket and throttle body from the intake manifold.

(f) Remove the throttle body gasket.

VSV FOR CANISTER CLOSED VALVE (CCV)

SF16Z-01

COMPONENTS

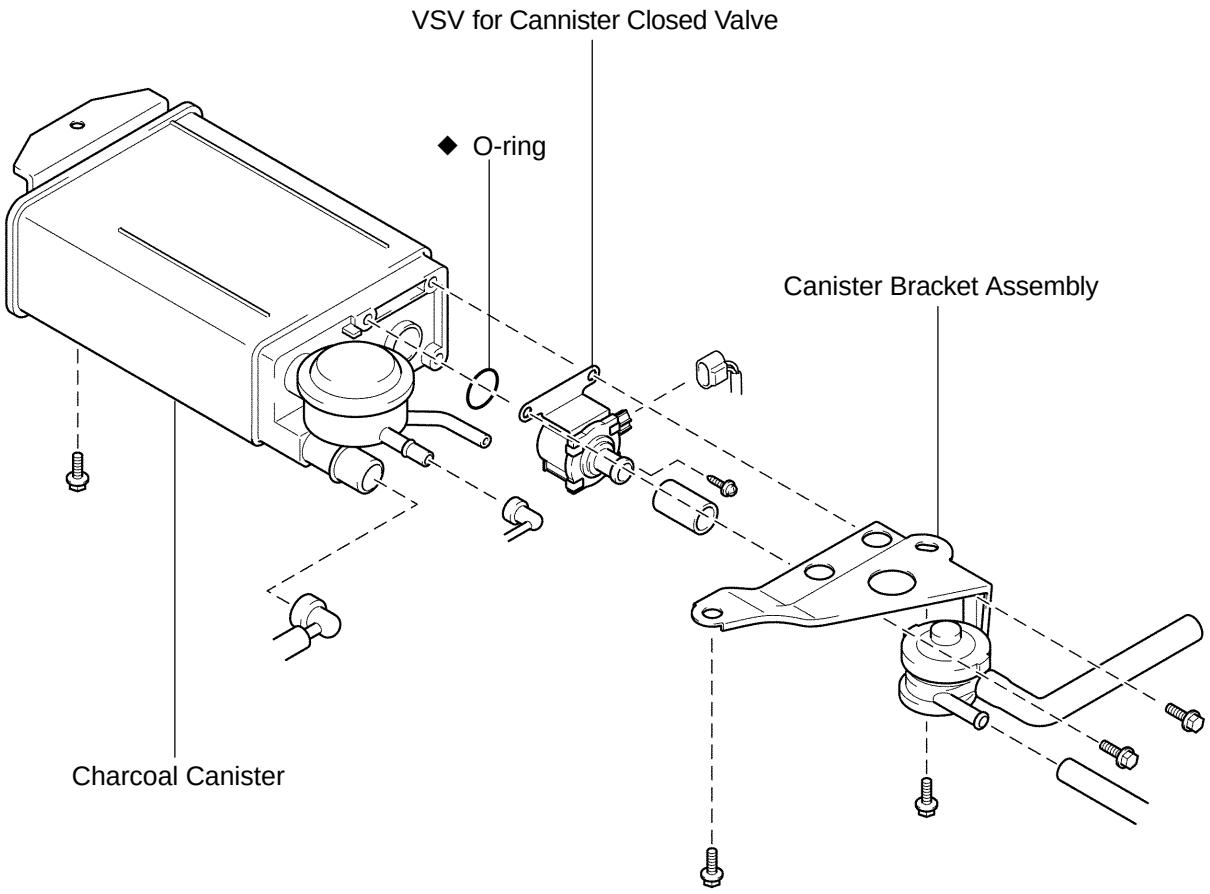

◆ Non-reusable part

P

B09573

SF170-01

INSPECTION

1. REMOVE VSV

(a) Remove the 3 bolts and canister assembly.
(b) Remove the 2 bolts and canister bracket assembly.
(c) Remove the screw and VSV.
(d) Remove the O-ring from the VSV.

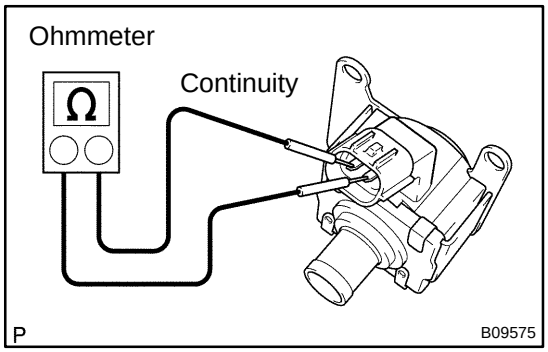

2. INSPECT VSV FOR OPEN CIRCUIT

Using an ohmmeter, check that there is continuity between the terminals.

Resistance:

At 20 ˚C (68 ˚F)	25 - 30 Ω
At 120 ˚C (248 ˚F)	33 - 22 Ω

If there is no continuity, replace the VSV.

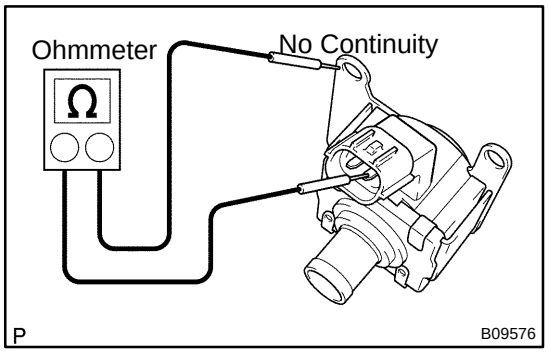

3. INSPECT VSV FOR GROUND

Using an ohmmeter, check that there is no continuity between each terminal and the body.
If there is no continuity, replace the VSV.

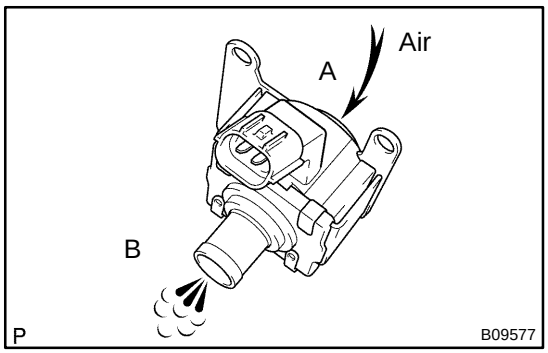

4. INSPECT VSV OPERATION

(a) Check that air flows from ports A to B.

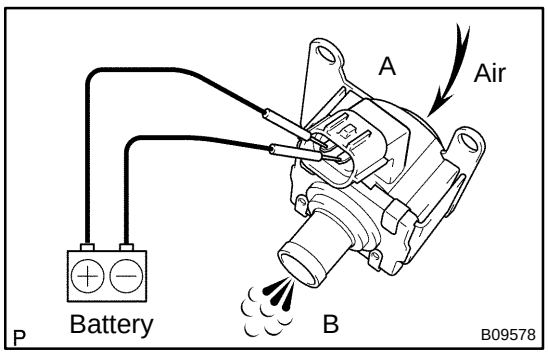

(b) Apply battery positive voltage across the terminals.
(c) Check that air does not flow from ports A to B.

If operation is not as specified, replace the VSV.

5. REINSTALL VSV

(a) Install a new O-ring to the VSV.
(b) Install the VSV with the screw.
(c) Install the canister bracket assembly with the 2 bolts.
(d) Install the canixter with the 3 bolts.

VSV FOR EVAPORATIVE EMISSION (EVAP)

SF16X-01

COMPONENTS

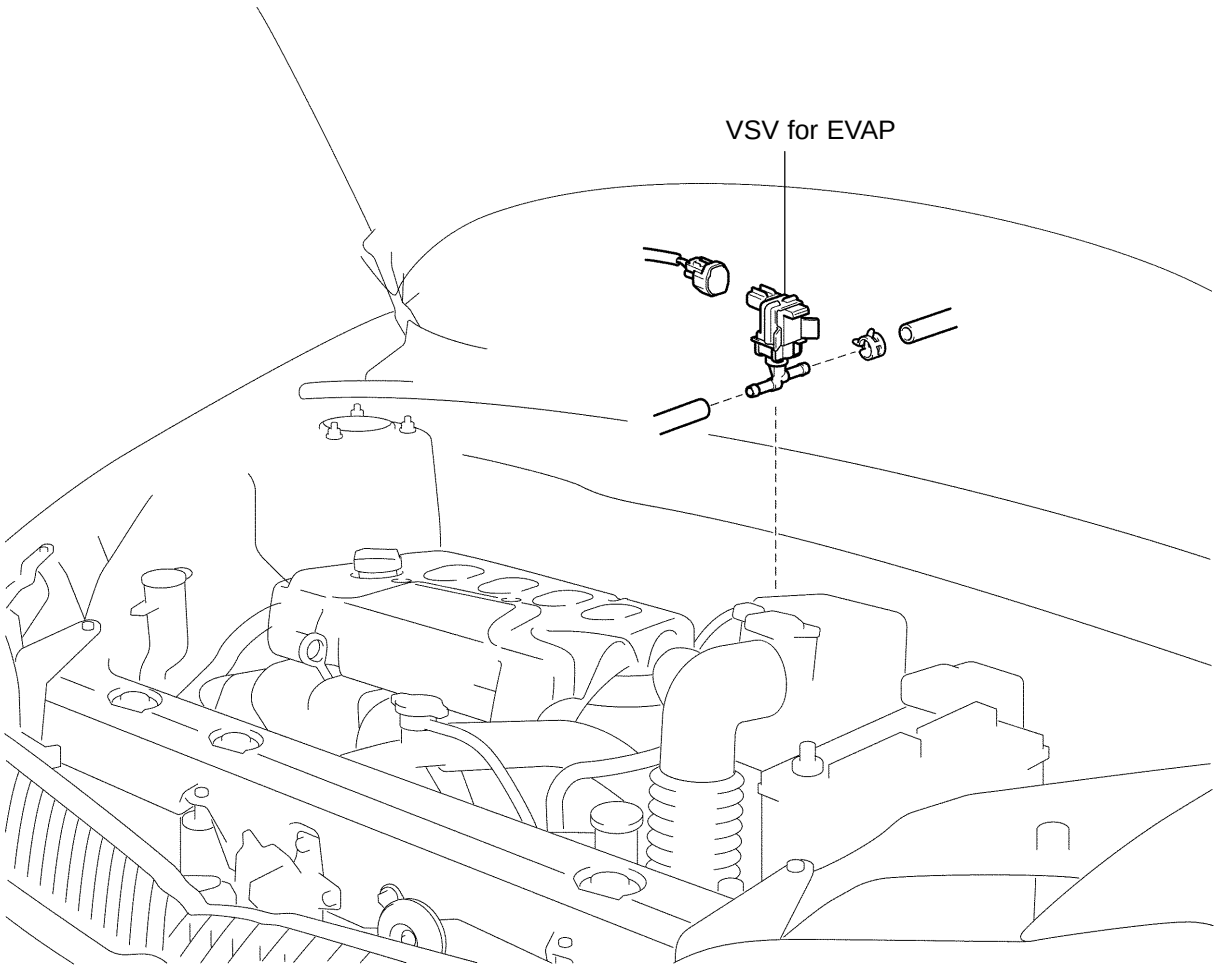

P

B09545

SF16Y-01

INSPECTION

1. REMOVE VSV

(a) Disconnect the 2 EVAP hoses from the VSV.
(b) Disconnect the VSV connector.
(c) Disconnect the air flow meter connector and harness clamp from the cleaner cap.
(d) Remove the cleaner cap with VSV.

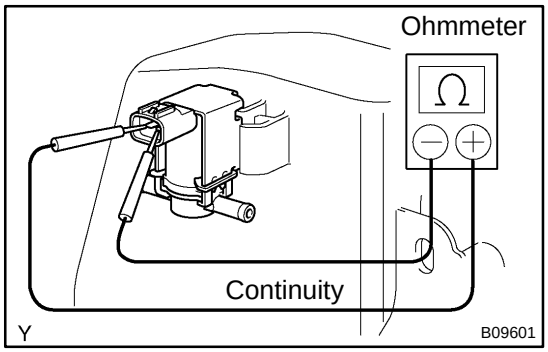

2. INSPECT VSV FOR OPEN CIRCUIT

Using an ohmmeter, check that there is continuity between the terminals.

Resistance:

27 - 33 Ω at 20˚C (68˚F)

If there is no continuity, replace the VSV.

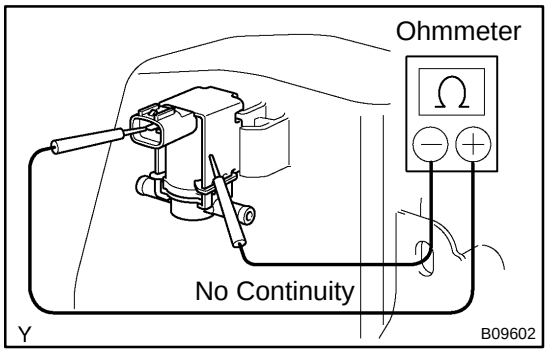

3. INSPECT VSV FOR GROUND

Using an ohmmeter, check that there is no continuity between each terminal and the body.

If there is continuity, replace the VSV.

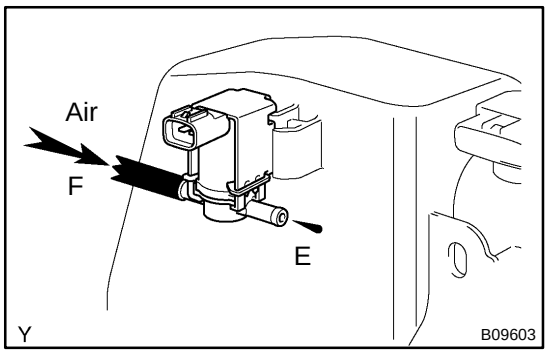

4. INSPECT VSV OPERATION

(a) Check that air flows with difficulty from port E to port F.

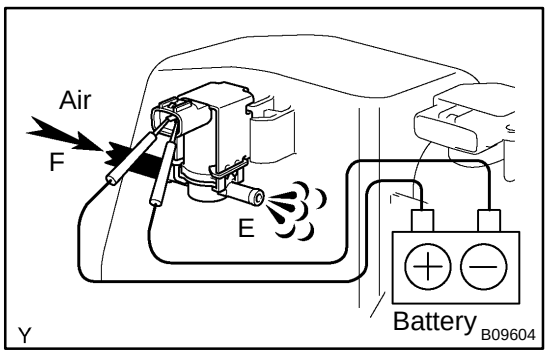

(b) Apply battery voltage across the terminals.
(c) Check that air flows from port E to port F.

If operation is not as specified, replace the VSV.

5. REINSTALL VSV

(a) Install the cleaner cap with the VSV.
(b) Connect the air flow meter connector and harness clamp.
(c) Connect the VSV connector.
(d) Connect the 2 EVAP hoses to the VSV.

VAPOR PRESSURE SENSOR

COMPONENTS

SF173-01

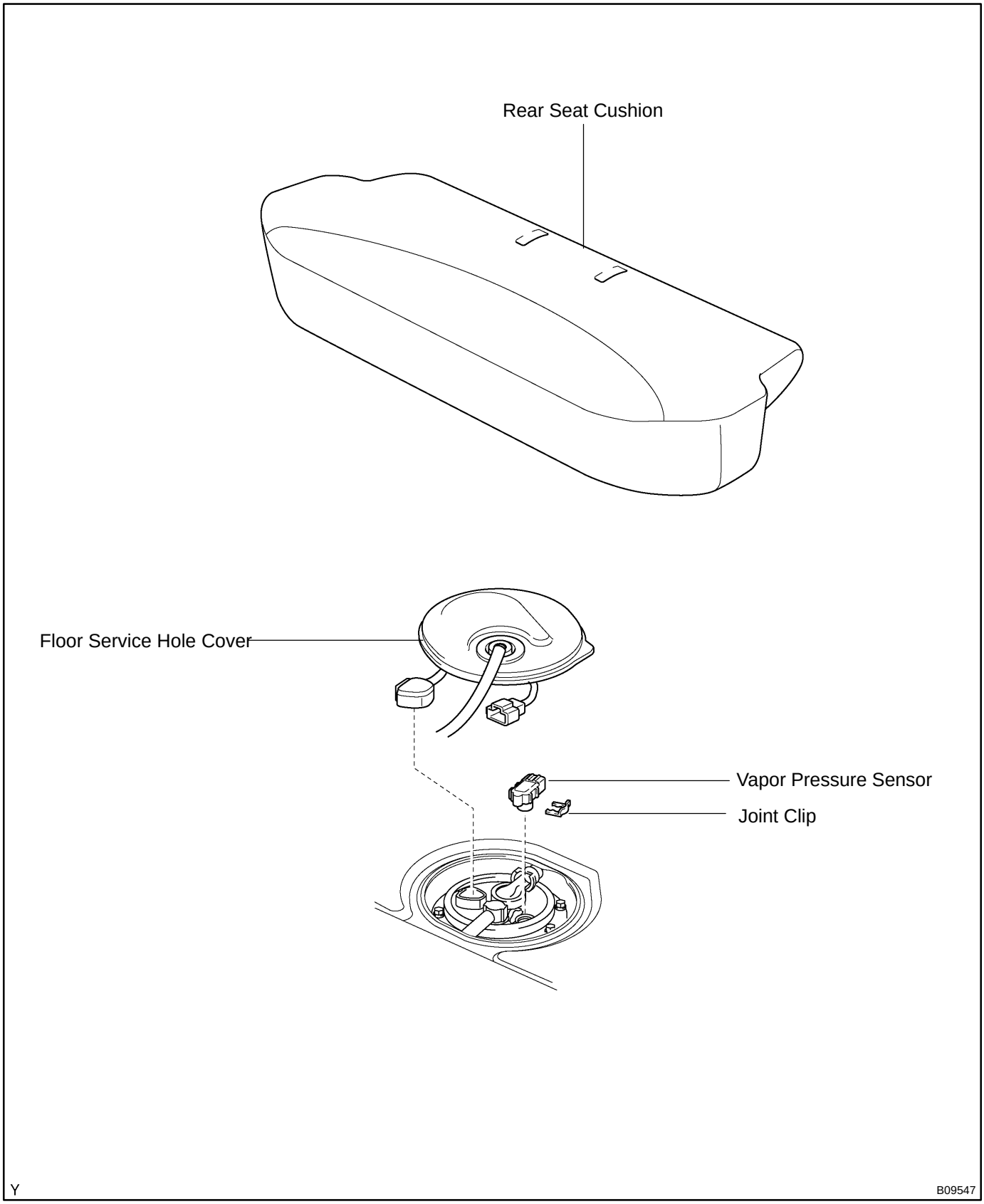

SF0A7-03

INSPECTION

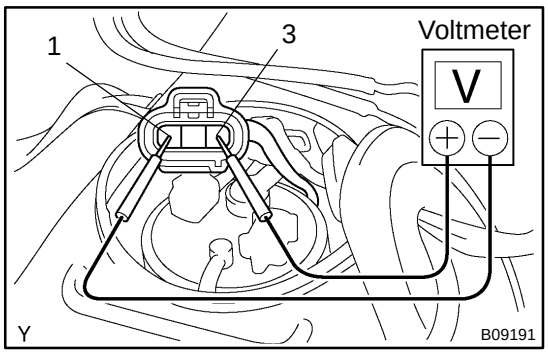

1. INSPECT POWER SOURCE VOLTAGE OF VAPOR PRESSURE SENSOR

(a) Disconnect the vapor pressure sensor connector.

HINT:

Near the fuel tank.

(b) Turn the ignition switch ON.

(c) Using a voltmeter, measure the voltage between connector terminals 1 and 3 of the wiring harness side.

Voltage:

4.5 - 5.5 V

(d) Turn the ignition switch to LOCK.

(e) Reconnect the vapor pressure sensor connector.

2. INSPECT POWER OUTPUT OF VAPOR PRESSURE SENSOR

(a) Turn the ignition switch ON.

(b) Remove the fuel tank cap.

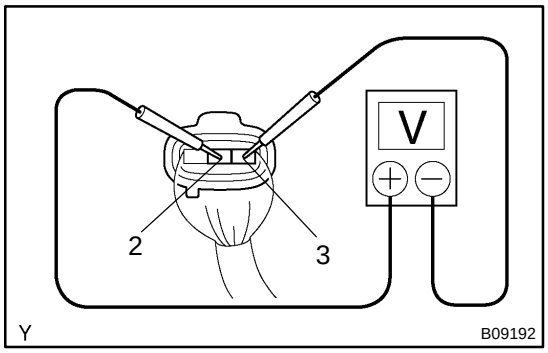

(c) Connect a voltmeter to terminals 2 and 3, and measure the output voltage.

Voltage:

3.0 - 3.6 V

(d) Reinstall the fuel tank cap.

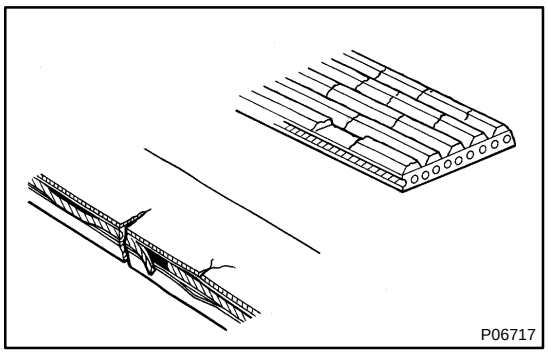

DRIVE BELT

SR0ZU-01

INSPECTION

INSPECT DRIVE BELT

(a) Visually check the belt for excessive wear, frayed cords, etc.

If any defect has been found, replace the drive belt.

HINT:

Cracks on the rib side of a belt are considered acceptable. If the missing chunks from the ribs are found on the belt, it should be replaced.

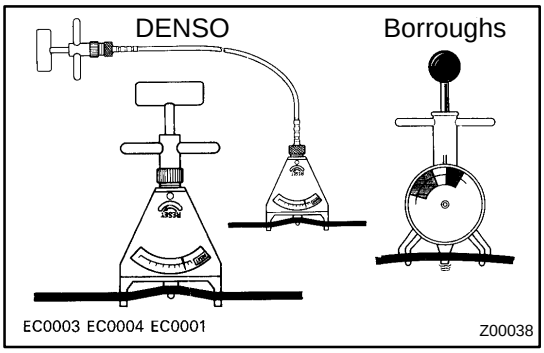

(b) Using a belt tension gauge, measure the belt tension.

Belt tension gauge:
DENSO BTG-20 (95506-00020) or
Borroughs No. BT-33-73F
Drive belt tension:
New belt: 440 - 540 N (45 - 55 kgf)
Used belt: 240 - 340 N (25 - 35 kgf)

If the belt tension is not as specified, adjust it.

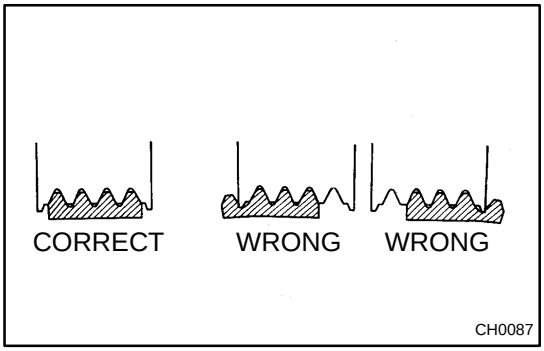

HINT:

- ”New belt” refers to a belt which has been used less than 5 minutes on a running engine.
- ”Used belt” refers to a belt which has been used on a running engine for 5 minutes or more.
- After installing a belt, check that it fits properly in the ribbed grooves.
- Check with your hand to confirm that the belt has not slipped out of the groove on the bottom of the pulley.
- After installing a new belt, run the engine for about 5 minutes and recheck the belt tension.

MANUAL STEERING GEAR

COMPONENTS

SR0VX-04

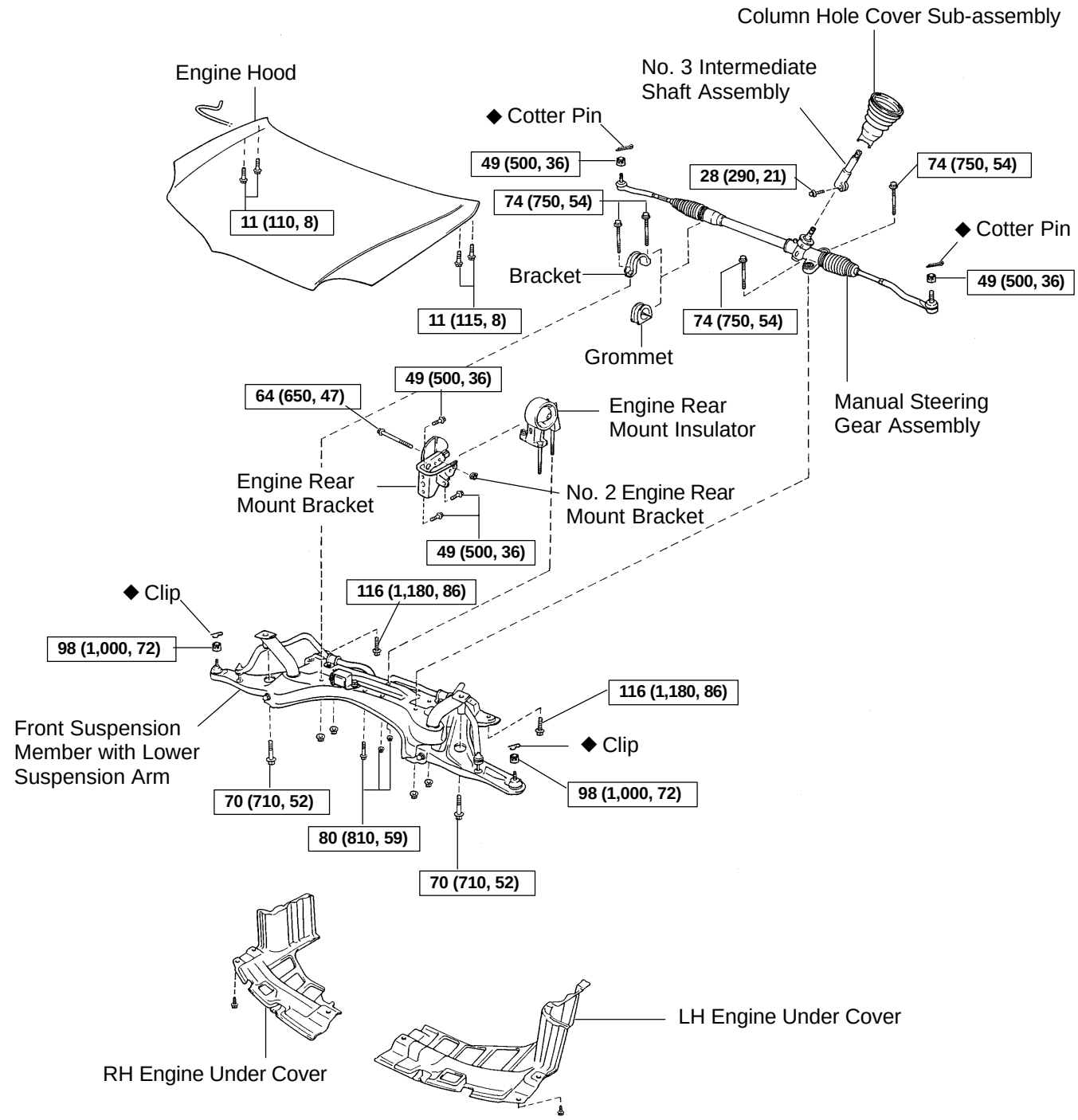

N·m (kgf·cm, ft·lbf) : Specified torque
◆ Non-reusable part

F10510

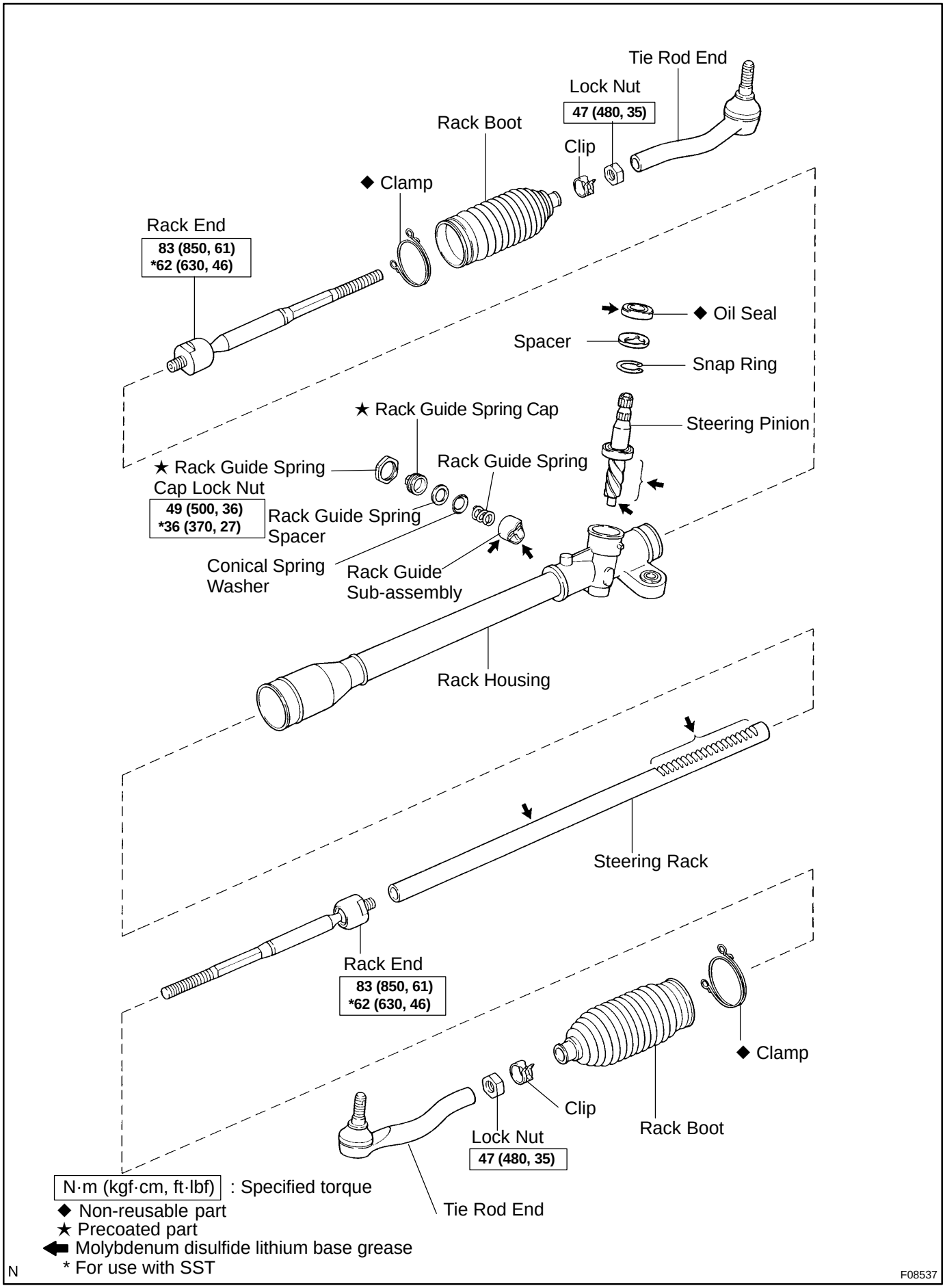
Tie Rod End
Lock Nut
47 (480, 35)
Rack Boot
Clip
◆ Clamp
Rack End
83 (850, 61)
*62 (630, 46)
◆ Oil Seal
Spacer
Snap Ring
★ Rack Guide Spring Cap
Steering Pinion
★ Rack Guide Spring
Cap Lock Nut
49 (500, 36)
*36 (370, 27)
Rack Guide Spring
Rack Guide Spring
Spacer
Conical Spring
Washer
Rack Guide
Sub-assembly
Rack Housing
Steering Rack
Rack End
83 (850, 61)
*62 (630, 46)
◆ Clamp
Clip
Rack Boot
Lock Nut
47 (480, 35)
Tie Rod End
N·m (kgf·cm, ft·lbf) : Specified torque
◆ Non-reusable part
★ Precoated part
Molybdenum disulfide lithium base grease
* For use with SST
N
F08537

SR0VZ-02

DISASSEMBLY

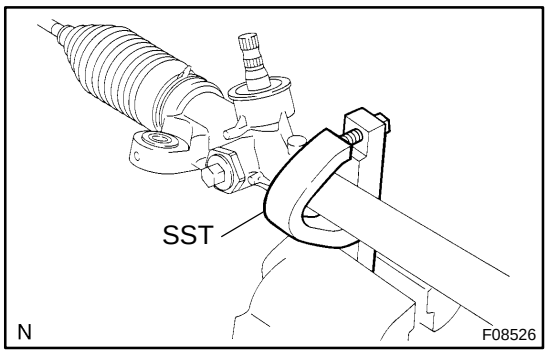

NOTICE:

When using a vise, do not overtighten it.

1. SECURE MANUAL STEERING GEAR ASSEMBLY IN VISE

Using SST, secure the manual steering gear assembly in a vise.

SST 09612-00012

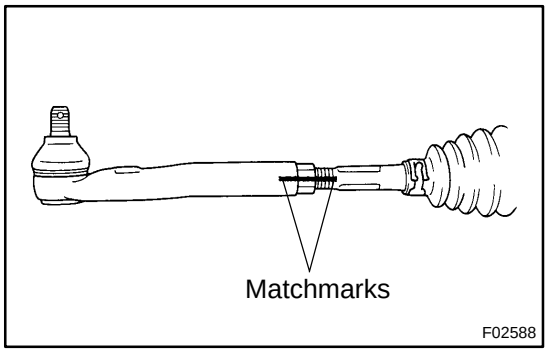

2. REMOVE RH AND LH TIE ROD ENDS AND LOCK NUTS

(a) Place matchmarks on the tie rod end and rack end.

(b) Loosen the lock nut, and remove the tie rod end and lock nut.

(c) Employ the same manner described above to the other side.

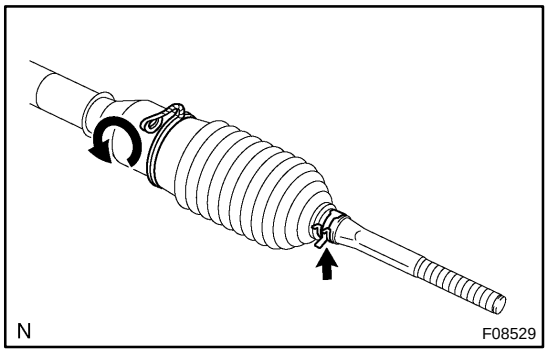

3. REMOVE RH AND LH CLIPS, CLAMPS AND RACK BOOTS

(a) Using pliers, loosen the clamp.

(b) Remove the clip, clamp and rack boot.

NOTICE:

Be careful not to damage the boot.

HINT:

Mark the RH and LH rack boots.

(c) Employ the same manner described above to the other side.

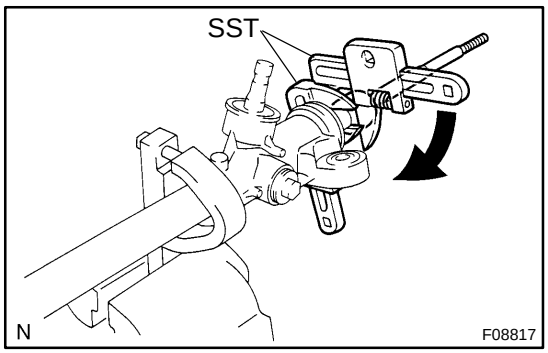

4. REMOVE RH AND LH RACK ENDS

(a) Using SST, hold the steering rack steadily and using another SST, remove the rack end.

SST 09922-10010

NOTICE:

Use SST 09922-10010 in the direction shown in the illustration.

HINT:

Mark the RH and LH rack ends.

(b) Employ the same manner described above to the other side.

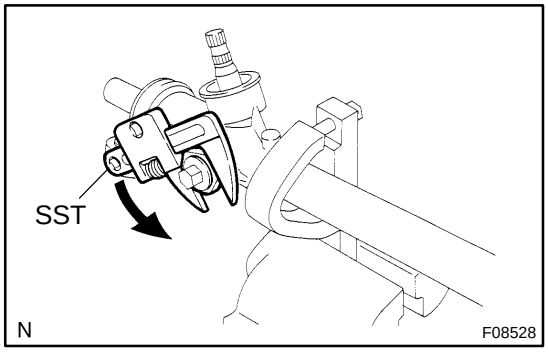

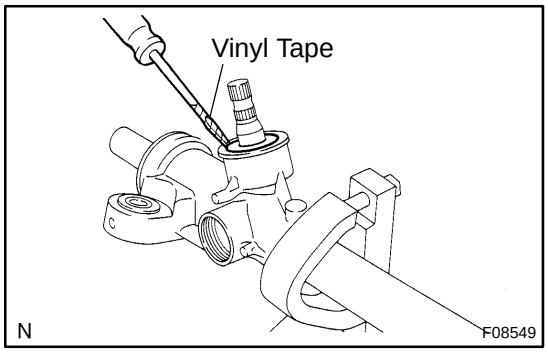

5. REMOVE RACK GUIDE SPRING CAP LOCK NUT

Using SST, remove the rack guide spring cap lock nut.

SST 09922-10010

NOTICE:

Use SST 09922-10010 in the direction shown in the illustration.

6. REMOVE RACK GUIDE SPRING CAP, RACK GUIDE SPRING SPACER, CONICAL SPRING WASHER, RACK GUIDE SPRING AND RACK GUIDE SUB-ASSEMBLY

7. REMOVE OIL SEAL, SPACER AND STEERING PINION

(a) Using a screwdriver with vinyl tape wound around its tip, remove the oil seal.

NOTICE:

Be careful not to damage the rack housing.

(b) Remove the spacer.

(c) Using snap ring pliers, remove the snap ring and pull out the steering pinion.

NOTICE:

Be careful not to damage the serrations.

8. REMOVE STEERING RACK

NOTICE:

To avoid damaging the bushing, remove the rack from the steering pinion housing side of the rack housing without revolving it.

SR0W0-02

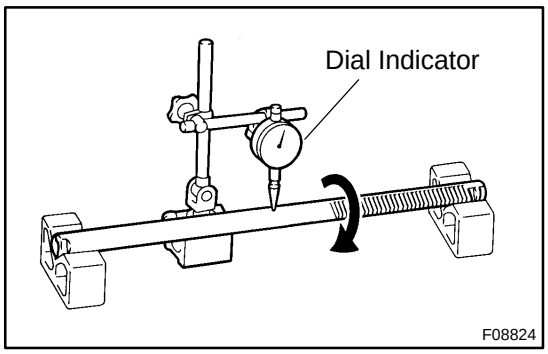

INSPECTION

NOTICE:

When using a vise, do not overtighten it.

INSPECT STEERING RACK

(a) Using a dial indicator, check the rack for runout, teeth wear and damage.
Maximum runout: 0.15 mm (0.0059 in.)

(b) Check the back surface for wear and damage.

SR0ZD-03

INSTALLATION

1. INSTALL ENGINE REAR MOUNT INSULATOR AND ENGINE REAR MOUNT BRACKET

(a) Install the engine rear mount bracket with the 3 bolts.
Torque: 49 N·m (500 kgf·cm, 36 ft·lbf)

(b) Install the engine rear mount insulator with the through bolt and No. 2 engine rear mount bracket.
Torque: 64 N·m (650 kgf·cm, 47 ft·lbf)

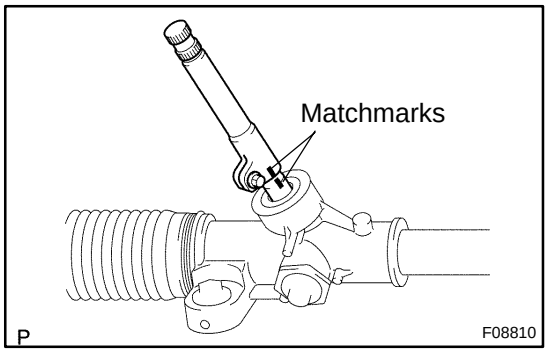

2. INSTALL MANUAL STEERING GEAR ASSEMBLY

(a) Align the matchmarks on the No. 3 intermediate shaft assembly and steering pinion.

(b) Install the No. 3 intermediate shaft assembly with the bolt.
Torque: 28 N·m (290 kgf·cm, 21 ft·lbf)

(c) Install the grommet and bracket to the manual steering gear assembly.

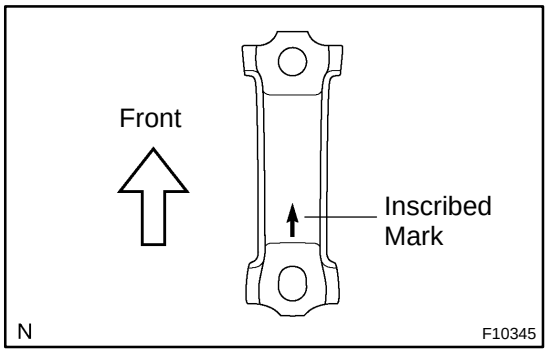

HINT:
Install the bracket with the inscribed mark facing to the front of the vehicle.

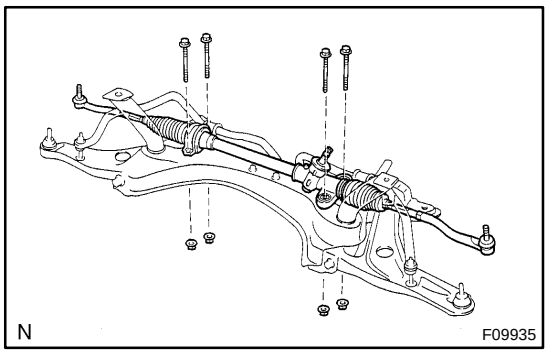

(d) Install the manual steering gear assembly with the 4 bolts and nuts to the front suspension member.
Torque: 74 N·m (750 kgf·cm, 54 ft·lbf)

NOTICE:
Because the nut has its own stopper, do not turn the nut and torque the bolt with the nut fixed.

(e) Install the column hole cover sub-assembly.

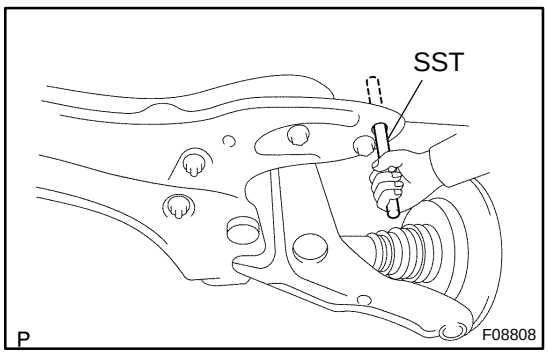

3. INSTALL FRONT SUSPENSION MEMBER WITH LOWER SUSPENSION ARM AND MANUAL STEERING GEAR ASSEMBLY

(a) Using SST, align the holes of the front suspension member and body.
SST 09670-00010

(b) Employ the same manner described above to the other side.

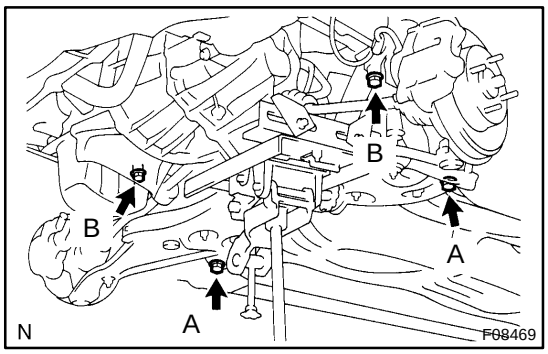

(c) Install the front suspension member with lower suspension arm and manual steering gear assembly with the 4 bolts.

Torque:
Bolt A: 116 N·m (1,185 kgf·cm, 86 ft·lbf)
Bolt B: 70 N·m (715 kgf·cm, 52 ft·lbf)

(d) Connect the column hole cover sub-assembly.

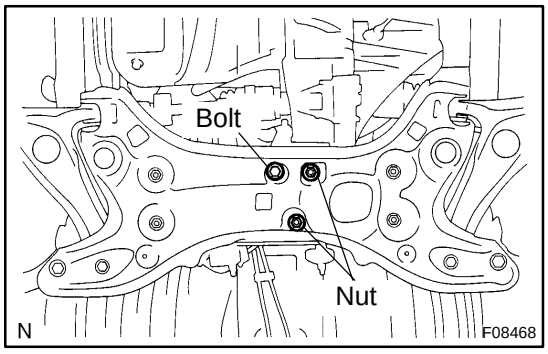

4. CONNECT ENGINE REAR MOUNT INSULATOR AND FRONT SUSPENSION MEMBER

Connect the engine rear mount insulator and front suspension member with the bolt and 2 nuts.

Torque: 80 N·m (810 kgf·cm, 59 ft·lbf)

5. CONNECT LOWER SUSPENSION ARM TO STEERING KNUCKLE (See page SA-35)

6. DISENGAGE ENGINE SLING DEVICE FROM ENGINE HANGERS

(a) Disengage the engine chain hoist from the engine hangers.

(b) Remove the 2 No. 1 engine hangers.

7. INSTALL ENGINE HOOD (See page BO-6)

8. CONNECT SLIDING YOKE (See page SR-20)

9. INSTALL NO. 2 COLUMN HOLE COVER (See page SR-20)

10. CONNECT RH AND LH TIE ROD ENDS (See page SA-14)

11. INSTALL RH AND LH ENGINE UNDER COVERS

12. PLACE FRONT WHEELS FACING STRAIGHT AHEAD

HINT:

Do it with the front of the vehicle jacked up.

13. CENTER SPIRAL CABLE (See page SR-20)

14. INSTALL STEERING WHEEL

(a) Align the matchmarks on the steering wheel and steering column main shaft.

(b) Temporarily tighten the steering wheel set nut.

15. CHECK STEERING WHEEL CENTER POINT

16. TORQUE STEERING WHEEL SET NUT

Torque: 50 N·m (510 kgf·cm, 37 ft·lbf)

17. INSTALL STEERING WHEEL PAD (See page SR-20)

18. CHECK FRONT WHEEL ALIGNMENT (See page SA-5)

SR0W1-02

REASSEMBLY

NOTICE:

When using a vise, do not overtighten it.

1. COAT PARTS INDICATED BY ARROWS WITH MOLYBDENUM DISULFIDE LITHIUM BASE GREASE (See page SR-33)

2. INSTALL STEERING RACK

NOTICE:

To avoid damaging the bushing, install the rack from the steering pinion side of the rack housing without revolving it.

3. INSTALL STEERING PINION, SPACER AND OIL SEAL

(a) Set the notched side of the steering rack so that the pinion can be positioned inside.

(b) Push in the steering pinion, and using snap ring pliers, install the snap ring.

NOTICE:

Be careful not to damage the serrations.

(c) Install the spacer.

(d) Coat a new oil seal lip with molybdenum disulfide lithium base grease.

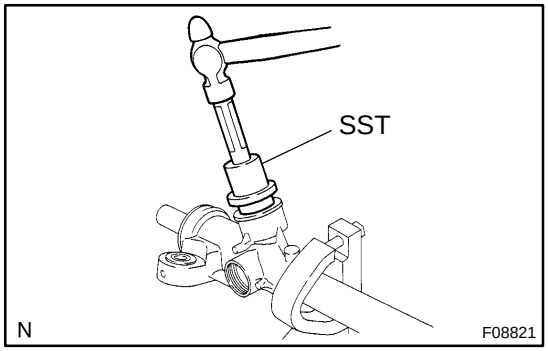

(e) Using SST and a hammer, tap in the oil seal.
SST 09517-12010

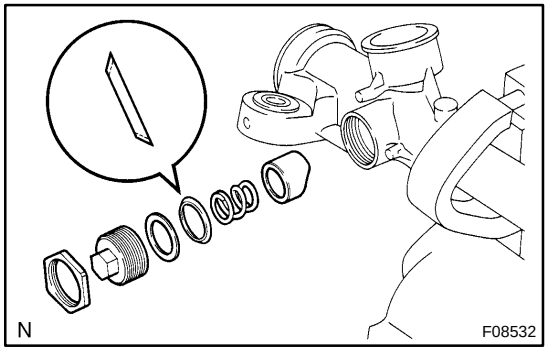

4. INSTALL RACK GUIDE SUB- ASSEMBLY, RACK GUIDE SPRING, CONICAL SPRING WASHER, RACK GUIDE SPRING SPACER AND RACK GUIDE SPRING CAP

(a) Install the rack guide sub-assembly, rack guide spring, conical spring washer and rack guide spring spacer.

NOTICE:

Make sure that the conical spring washer is installed facing in the correct direction.

(b) Apply sealant to 2 or 3 threads of the rack guide spring cap.
Sealant:
Part No. 08833-00080, THREE BOND 1344, LOCTITE 242 or equivalent

(c) Temporarily install the rack guide spring cap.

5. ADJUST TOTAL PRELOAD

(a) Temporarily install the RH and LH rack ends.

(b) Torque the rack guide spring cap.
Torque: 6.9 N·m (70 kgf·cm, 61 in.·lbf)

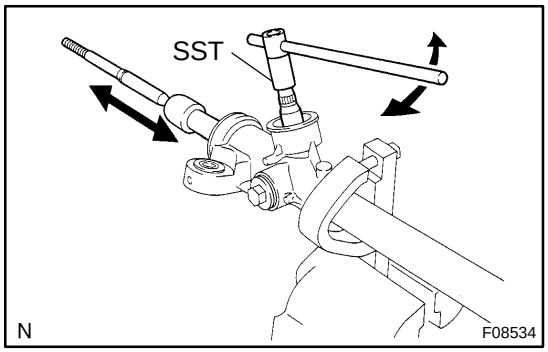

(c) Using SST, turn the pinion shaft right and left 1 or 2 times.
SST 09612-24014 (09616-10010)

(d) Loosen the rack guide spring cap until the rack guide spring is not functioning.

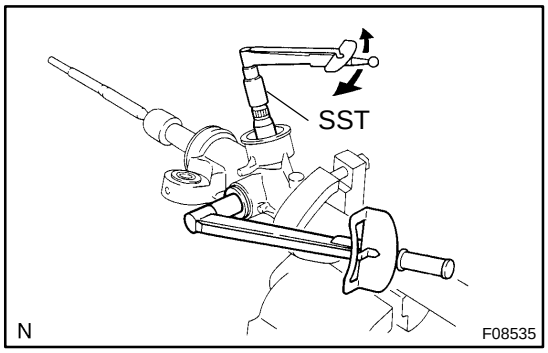

(e) Using SST and a torque wrench, tighten the rack guide spring cap until the preload is within specification.
SST 09612-24014 (09616-10010)
Preload (turning):
0.6 - 1.5 N·m (6 - 15 kgf·cm, 5.2 - 13.0 in.·lbf)

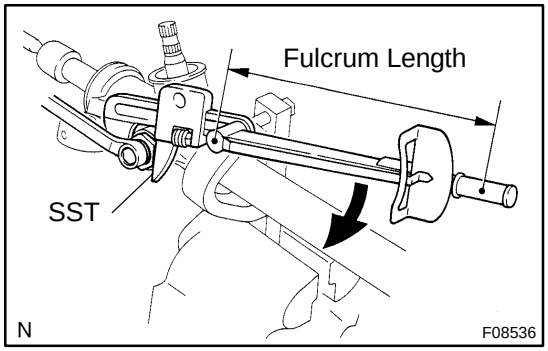

6. INSTALL RACK GUIDE SPRING CAP LOCK NUT

(a) Apply sealant to 2 or 3 threads of the rack guide spring cap lock nut.
Sealant:
Part No. 08833-00080, THREE BOND 1344, LOCTITE 242 or equivalent

(b) Hold the rack guide spring cap rotating and using SST, torque the rack guide spring cap lock nut.
SST 09922-10010
Torque: 36 N·m (365 kgf·cm, 26 ft·lbf)

NOTICE:
Use SST 09922-10010 in the direction shown in the illustration.

HINT:
Use a torque wrench with a fulcrum length of 345 mm (13.58 in.).

(c) Recheck the total preload.
Preload (turning):
0.6 - 1.5 N·m (6 - 15 kgf·cm, 5.2 - 13.0 in.·lbf)

(d) Remove the RH and LH rack ends.

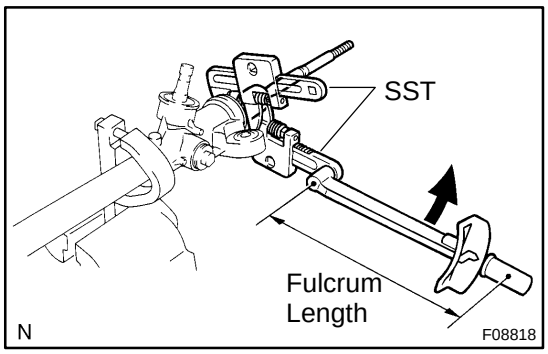

7. INSTALL RH AND LH RACK ENDS

(a) Using SST, hold the steering rack steadily and using another SST, install the rack end.
SST 09922-10010
Torque: 62 N·m (630 kgf·cm, 46 ft·lbf)

NOTICE:
Use SST 09922-10010 in the direction shown in the illustration.

HINT:
Use a torque wrench with a fulcrum length of 380 mm (14.96 in.).

(b) Employ the same manner described above to the other side.

8. INSTALL RH AND LH RACK BOOTS, CLAMPS AND CLIPS

(a) Install the rack boot, clip and a new clamp.

NOTICE:
Be careful not to damage or twist the boot.

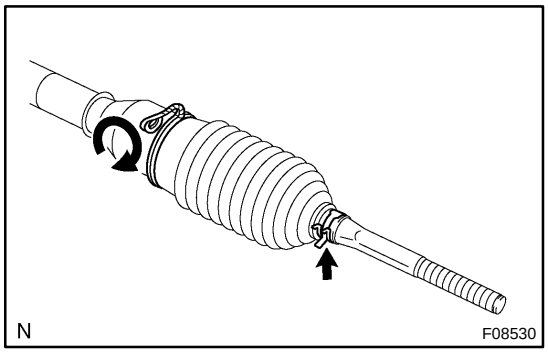

(b) After winding and tightening the clamp around the circumference of the boot twice, twist it several times, and install it.

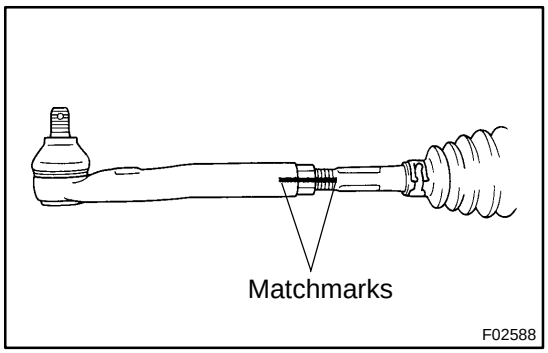

9. INSTALL RH AND LH TIE ROD ENDS AND LOCK NUTS

(a) Screw the lock nut and tie rod end onto the rack end until the matchmarks are aligned.

(b) After adjusting toe-in, torque the lock nut (See page SA-5).
Torque: 47 N·m (480 kgf·cm, 35 ft·lbf)

(c) Employ the same manner described above to the other side.

SR0ZC-03

REMOVAL

NOTICE:

Remove the steering wheel assembly before the steering gear removal, because there is possibility of breaking of the spiral cable.

1. **PLACE FRONT WHEELS FACING STRAIGHT AHEAD**
2. **REMOVE STEERING WHEEL PAD (See page SR-13)**
3. **REMOVE STEERING WHEEL (See page SR-13)**
4. **REMOVE RH AND LH ENGINE UNDER COVERS**
5. **DISCONNECT RH AND LH TIE ROD ENDS (See page SA-10)**
6. **REMOVE NO. 2 COLUMN HOLE COVER (See page SR-13)**
7. **DISCONNECT SLIDING YOKE (See page SR-13)**
8. **REMOVE ENGINE HOOD (See page BO-6)**

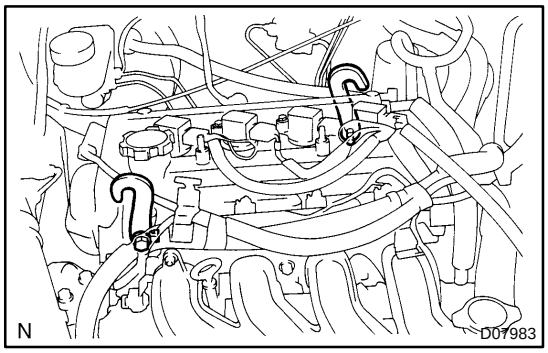

9. **ATTACH ENGINE SLING DEVICE TO ENGINE HANGERS**

(a) Install the 2 No. 1 engine hangers with the bolt in the correct direction.

Parts No.:

No. 1 engine hanger: 12281-21010

Bolt: 91511-60818

Torque: 20 N·m (200 kgf·cm, 15 ft·lbf)

(b) Attach the engine chain hoist to the engine hangers.

CAUTION:

Do not attempt to hang the engine by hooking the chain to any other part.

10. **DISCONNECT LOWER SUSPENSION ARM FROM STEERING KNUCKLE (See page SA-33)**

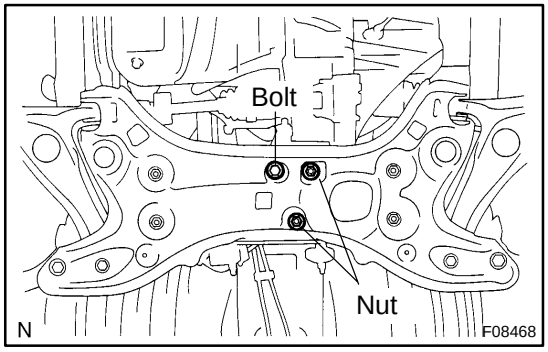

11. **DISCONNECT ENGINE REAR MOUNT INSULATOR AND FRONT SUSPENSION MEMBER**

Remove the bolt and 2 nuts, and disconnect the engine rear mount insulator and front suspension member.

12. **SUPPORT FRONT SUSPENSION MEMBER WITH LOWER SUSPENSION ARM**

Using a transmission jack, support the front suspension member with lower suspension arm.

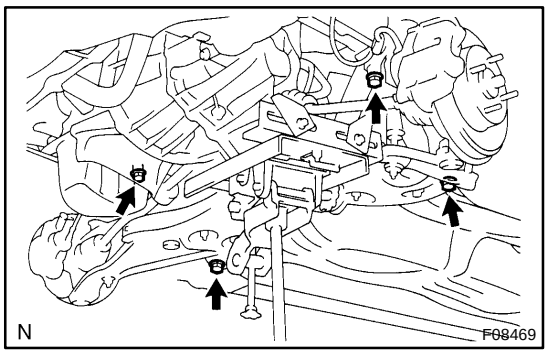

13. REMOVE FRONT SUSPENSION MEMBER WITH LOWER SUSPENSION ARM AND MANUAL STEERING GEAR ASSEMBLY

(a) Disconnect the column hole cover sub-assembly.

(b) Remove the 4 bolts and front suspension member with lower suspension arm and manual steering gear assembly.

14. REMOVE MANUAL STEERING GEAR ASSEMBLY

(a) Remove the column hole cover sub-assembly.

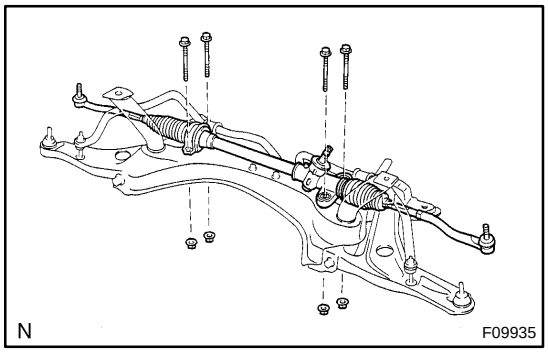

(b) Remove the 4 bolts, nuts and manual steering gear assembly from the front suspension member.

NOTICE:

Because the nut has its own stopper, do not turn the nut and torque the bolt with the nut fixed.

(c) Remove the bracket and grommet from the manual steering gear assembly.

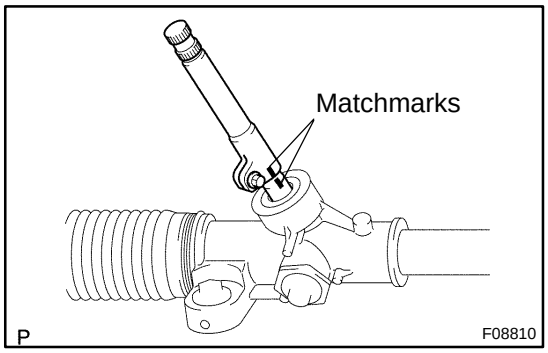

(d) Place matchmarks on the No. 3 intermediate shaft assembly and steering pinion.

(e) Remove the bolt and No. 3 intermediate shaft assembly.

15. REMOVE ENGINE REAR MOUNT INSULATOR AND ENGINE REAR MOUNT BRACKET

(a) Remove the through bolt, No. 2 engine rear mount bracket and engine rear mount insulator.

(b) Remove the 3 bolts and engine rear mount bracket.

POWER STEERING FLUID

SR05P-09

BLEEDING

1. CHECK FLUID LEVEL (See page SR-5)

2. JACK UP FRONT OF VEHICLE AND SUPPORT IT WITH STANDS

3. TURN STEERING WHEEL

With the engine stopped, turn the wheel slowly from lock to lock several times.

4. LOWER VEHICLE

5. START ENGINE

Run the engine at idle for a few minutes.

6. TURN STEERING WHEEL

(a) With the engine idling, turn the wheel to left or right full lock position and keep it there for 2-3 seconds, then turn the wheel to the opposite full lock position and keep it there for 2-3 seconds.

(b) Repeat (a) several times.

7. STOP ENGINE

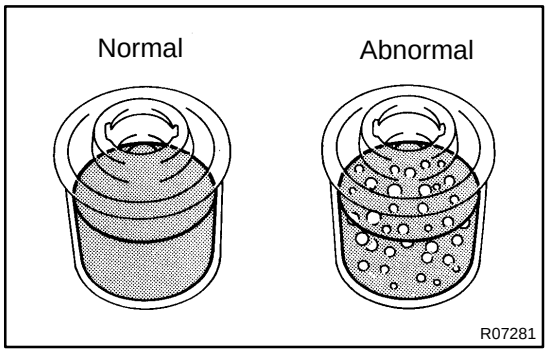

8. CHECK FOR FOAMING OR EMULSIFICATION

If the system has to be bled twice specifically because of foaming or emulsification, check for fluid leaks in the system.

9. CHECK FLUID LEVEL (See page SR-5)

SR05Q-09

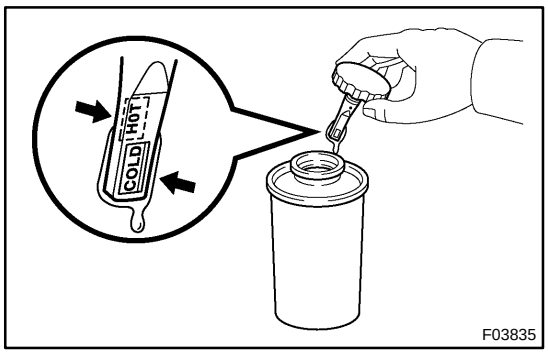

INSPECTION

1. CHECK FLUID LEVEL

(a) Keep the vehicle level.

(b) With the engine stopped, check the fluid level in the oil reservoir.

If necessary, add fluid.

Fluid: ATF DEXRON® II or III

HINT:

Check that the fluid level is within the HOT LEVEL range on the reservoir cap dipstick. If the fluid is cold, check that it is within the COLD LEVEL range.

(c) Start the engine and run it at idle.

(d) Turn the steering wheel from lock to lock several times to boost fluid temperature.

Fluid temperature: 80˚C (176˚F)

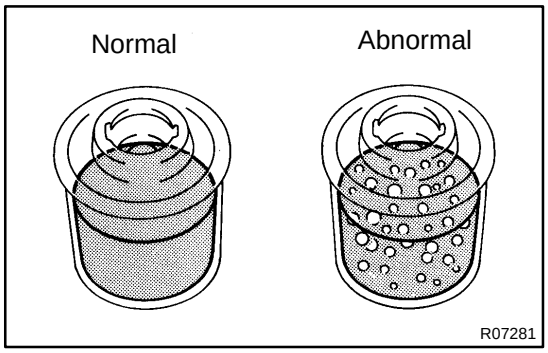

(e) Check for foaming or emulsification.

If there is foaming or emulsification, bleed power steering system (See page SR-4).

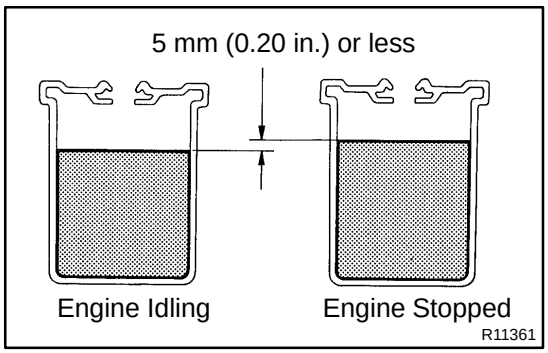

(f) With the engine idling, measure the fluid level in the oil reservoir.

(g) Stop the engine.

(h) Wait a few minutes and remeasure the fluid level in the oil reservoir.

Maximum fluid level rise: 5 mm (0.20 in.)

If a problem is found, bleed power steering system (See page SR-4).

(i) Check the fluid level.

2. CHECK STEERING FLUID PRESSURE

(a) Disconnect the pressure feed tube from the PS vane pump (See page SR-24).

(b) Connect SST, as shown in the illustration below.
SST 09640- 10010 (09641- 01010, 09641- 01030, 09641-01060)

NOTICE:
Check that the valve of the SST is in the open position.

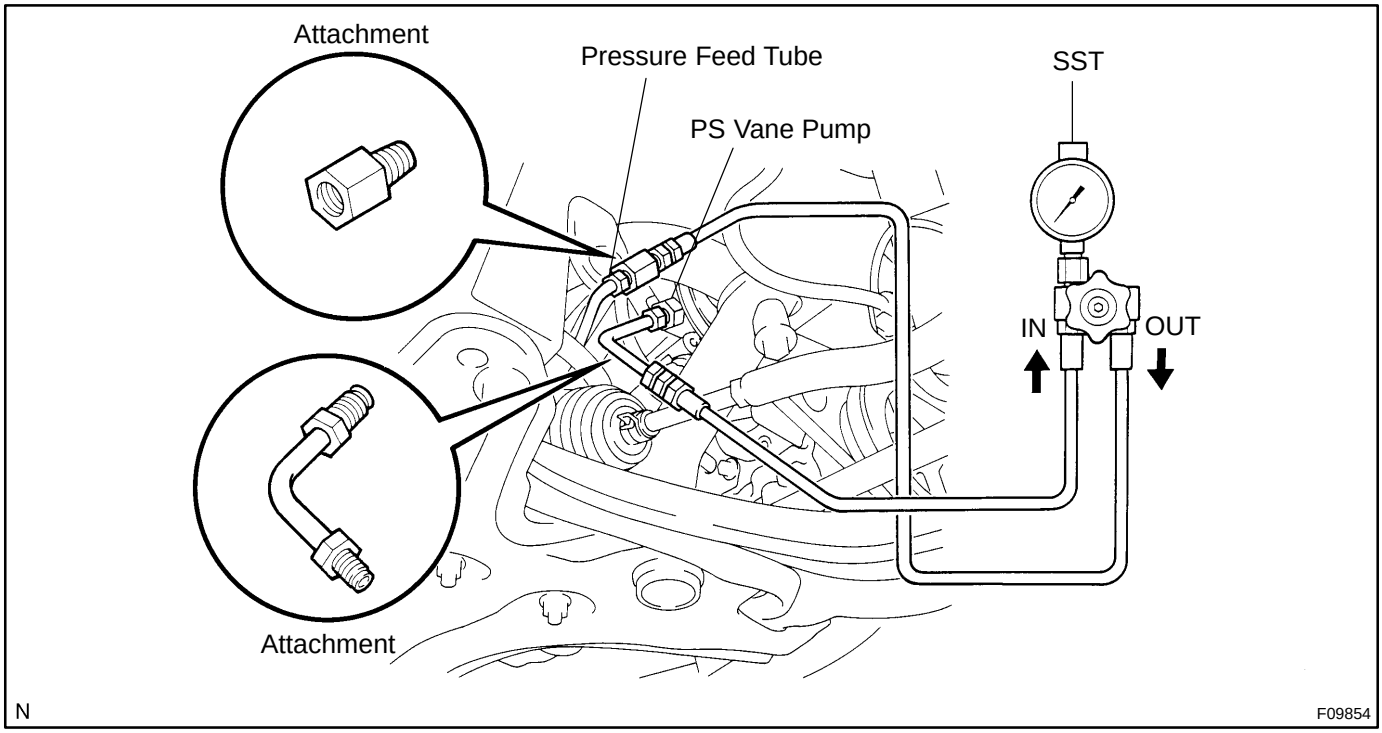

(c) Bleed the power steering system (See page SR-4).

(d) Start the engine and run it at idle.

(e) Turn the steering wheel from lock to lock several times to boost fluid temperature.
Fluid temperature: 80 ˚C (176 ˚F)

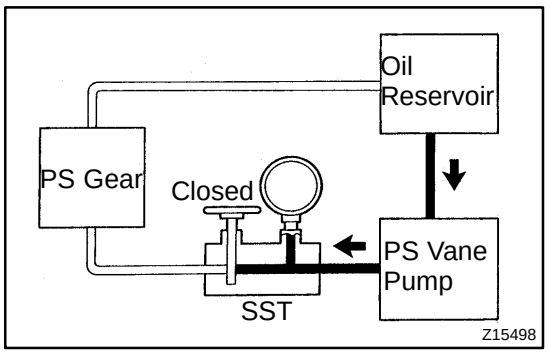

(f) With the engine idling, close the valve of the SST and observe the reading on the SST.
Minimum fluid pressure:
5,400 kPa (55 kgf/cm^2, 781 psi)

NOTICE:
- **Do not keep the valve closed for more than 10 seconds.**
- **Do not let the fluid temperature become too high.**

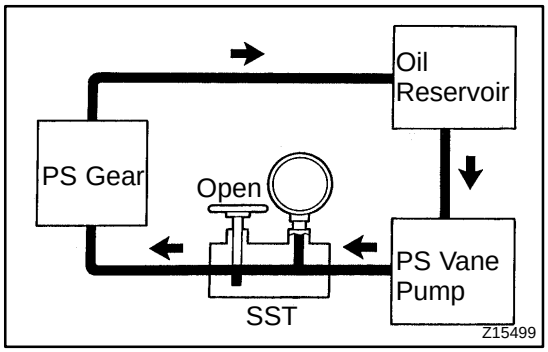

(g) With the engine idling, open the valve fully.
(h) Measure the fluid pressure at engine speeds of 1,000 rpm and 3,000 rpm.
Difference fluid pressure:
490 kPa (5 kgf/cm^2, 71 psi) or less

NOTICE:
Do not turn the steering wheel.

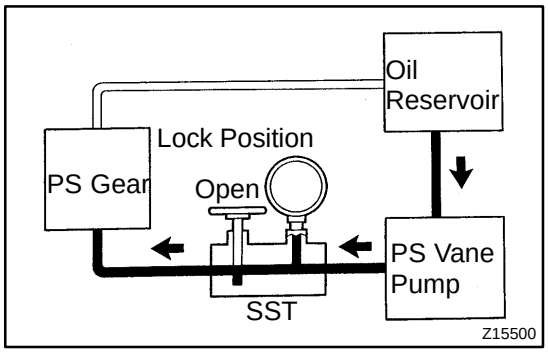

(i) With the engine idling and valve fully opened, turn the steering wheel to full lock position.
Minimum fluid pressure:
5,400 kPa (55 kgf/cm^2, 781 psi)

NOTICE:
- **Do not maintain lock position for more than 10 seconds.**
- **Do not let the fluid temperature become too high.**

(j) Disconnect the SST.
SST 09640-10010 (09641-01010, 09641-01030, 09641-01060)

(k) Connect the pressure feed tube to the PS vane pump (See page SR-32).

(l) Bleed the power steering system (See page SR-4).

POWER STEERING GEAR

COMPONENTS

SR0ZO-02

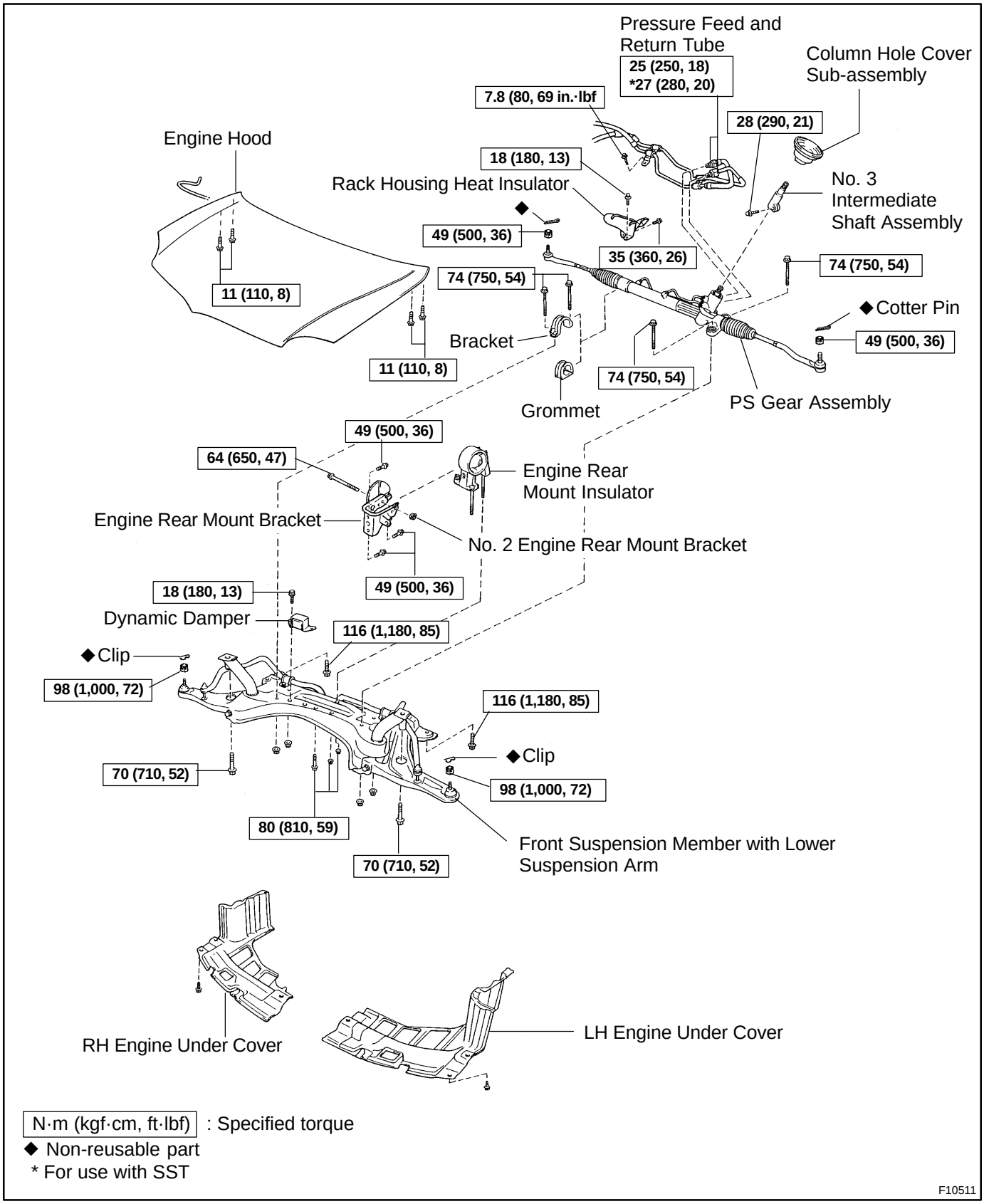

N·m (kgf·cm, ft·lbf) : Specified torque
◆ Non-reusable part
* For use with SST

F10511

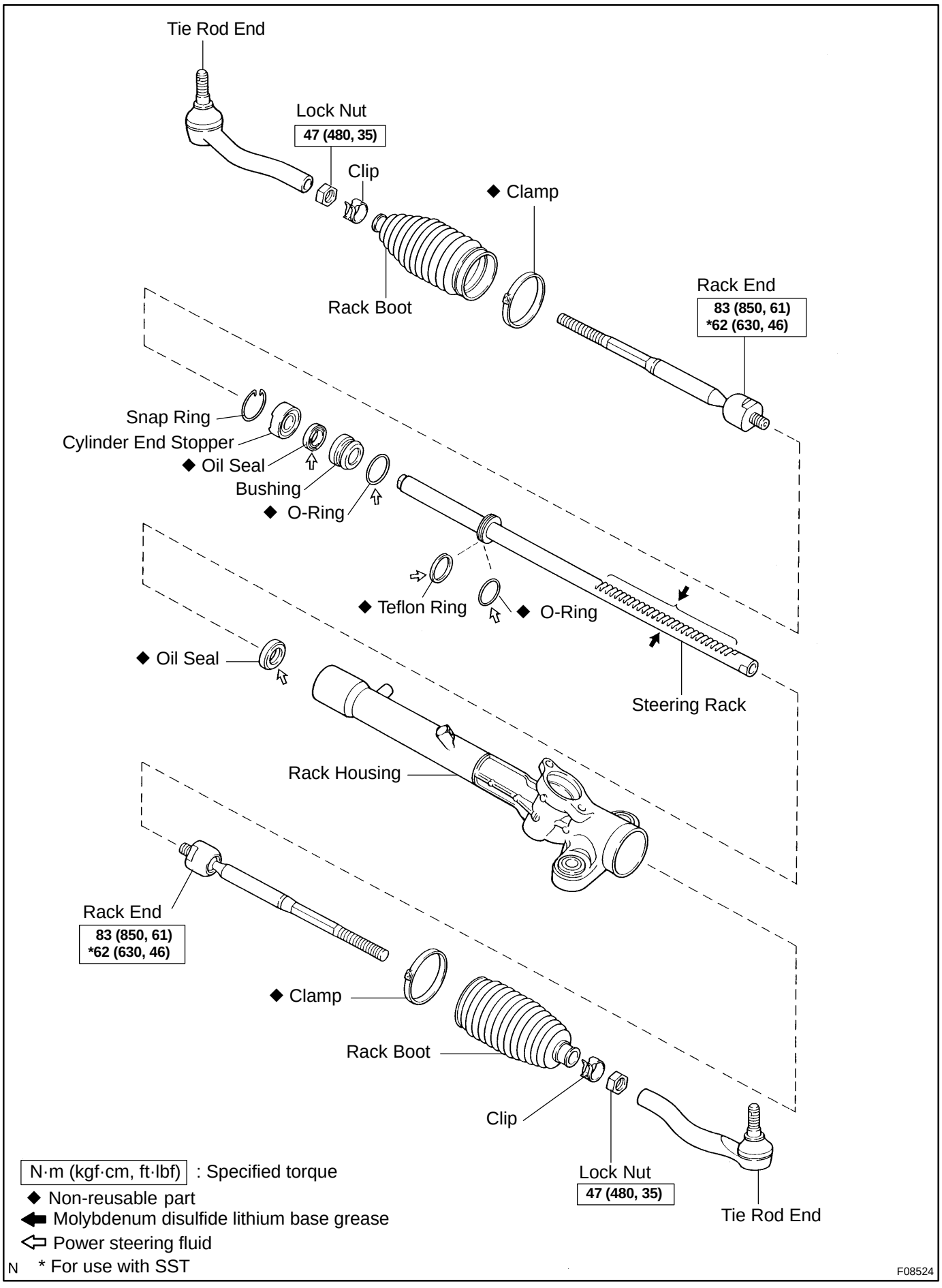
Tie Rod End
Lock Nut
47 (480, 35)
Clip
◆ Clamp
Rack Boot
Rack End
83 (850, 61)
*62 (630, 46)
Snap Ring
Cylinder End Stopper
◆ Oil Seal
Bushing
◆ O-Ring
◆ Teflon Ring
◆ O-Ring
◆ Oil Seal
Steering Rack
Rack Housing
Rack End
83 (850, 61)
*62 (630, 46)
◆ Clamp
Rack Boot
Clip
Lock Nut
47 (480, 35)
Tie Rod End
N·m (kgf·cm, ft·lbf) : Specified torque
◆ Non-reusable part
Molybdenum disulfide lithium base grease
Power steering fluid
N * For use with SST
F08524

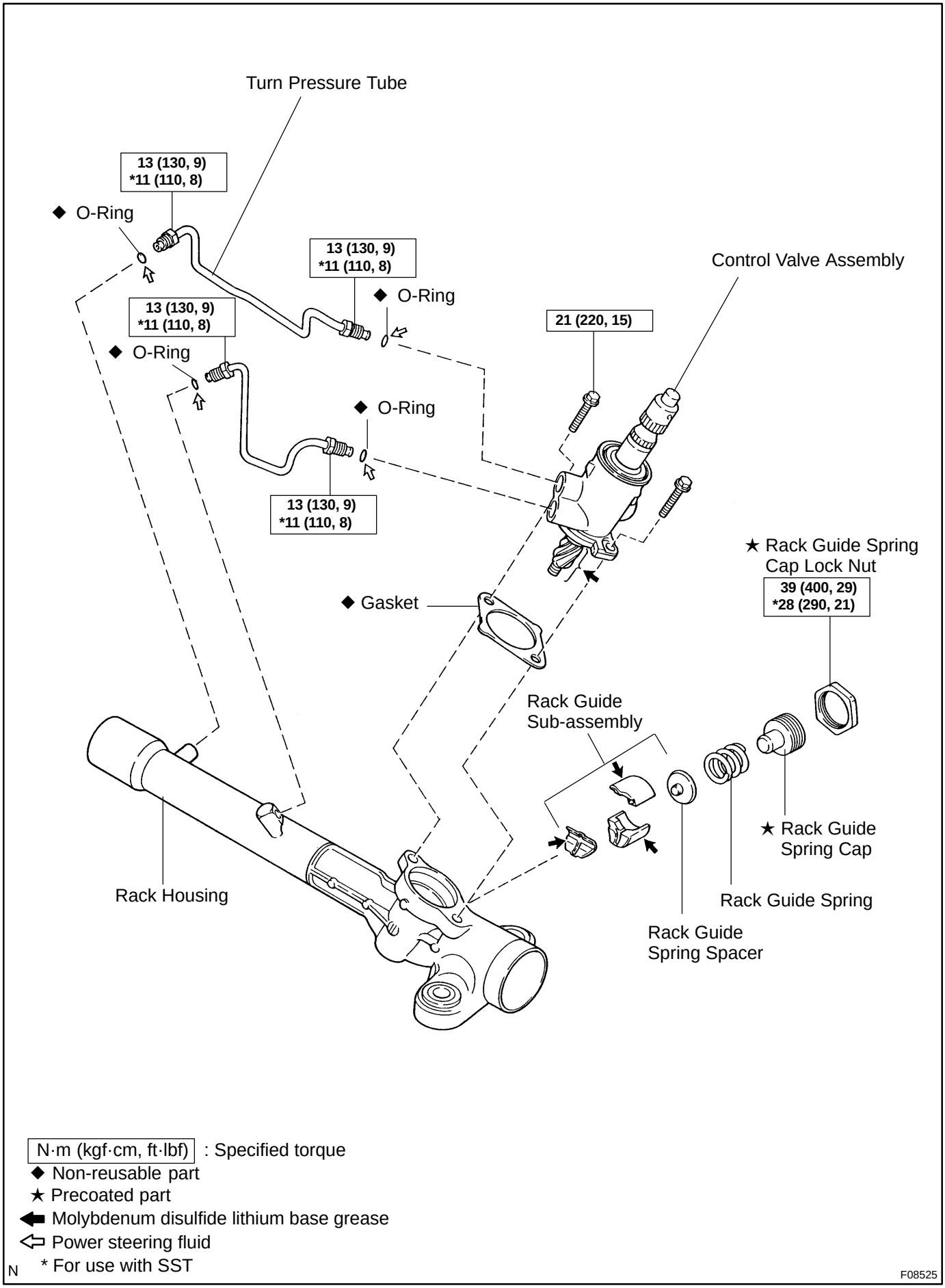
Turn Pressure Tube
13 (130, 9)
*11 (110, 8)
◆ O-Ring
13 (130, 9)
*11 (110, 8)
◆ O-Ring
13 (130, 9)
*11 (110, 8)
◆ O-Ring
◆ O-Ring
13 (130, 9)
*11 (110, 8)
21 (220, 15)
Control Valve Assembly
★ Rack Guide Spring
Cap Lock Nut
39 (400, 29)
*28 (290, 21)
◆ Gasket
Rack Guide
Sub-assembly
★ Rack Guide
Spring Cap
Rack Guide Spring
Rack Guide
Spring Spacer
Rack Housing
N·m (kgf·cm, ft·lbf) : Specified torque
◆ Non-reusable part
★ Precoated part
Molybdenum disulfide lithium base grease
Power steering fluid
* For use with SST
N
F08525

SR0ZQ-01

DISASSEMBLY

NOTICE:

When using a vise, do not overtighten it.

1. REMOVE 2 TURN PRESSURE TUBES

(a) Using SST, remove the 2 turn pressure tubes.
SST 09023-38200

(b) Remove the 4 O-rings from 2 turn pressure tubes.

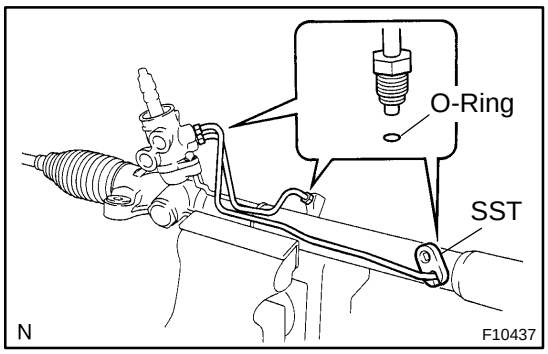

2. SECURE PS GEAR ASSEMBLY IN VISE

Using SST, secure the PS gear assembly in a vise.
SST 09612-00012

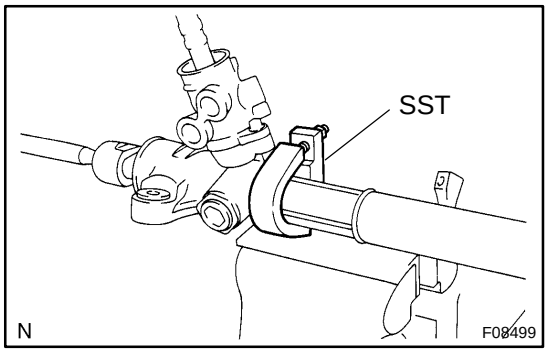

3. REMOVE RH AND LH TIE ROD ENDS AND LOCK NUTS

(a) Place matchmarks on the tie rod end and rack end.

(b) Loosen the lock nut, and remove the tie rod end and lock nut.

(c) Employ the same manner described above to the other side.

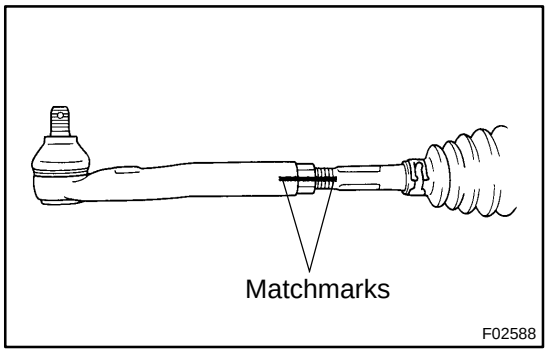

4. REMOVE RH AND LH CLIPS, CLAMPS AND RACK BOOTS

(a) Using a screwdriver, loosen the clamp.

(b) Remove the clip, clamp and rack boot.

NOTICE:

Be careful not to damage the boot.

HINT:

Mark the RH and LH rack boots.

(c) Employ the same manner described above to the other side.

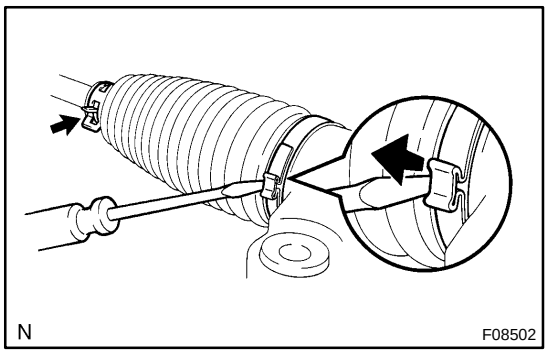

5. REMOVE RH AND LH RACK ENDS

(a) Using SST, hold the RH rack end steadily and using another SST, remove the LH rack end.
SST 09922-10010

NOTICE:

Use SST 09922-10010 in the direction shown in the illustration.

HINT:

Mark the RH and LH rack ends.

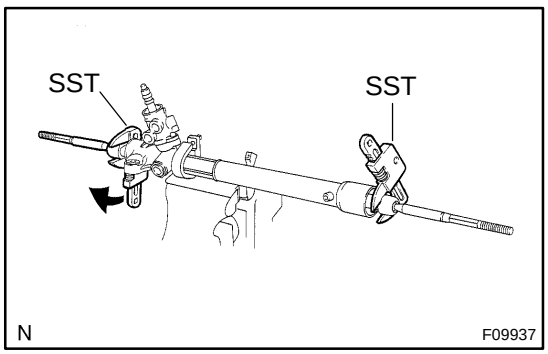

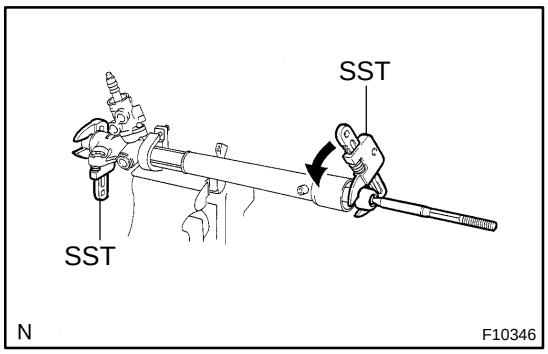

(b) Using SST, hold the steering rack LH side steadily and using another SST, remove the RH rack end.
SST 09922-10010

NOTICE:

Use SST 09922-10010 in the direction shown in the illustration.

HINT:

Mark the RH and LH rack ends.

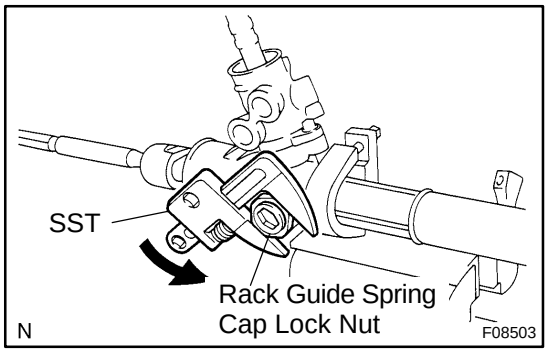

6. REMOVE RACK GUIDE SPRING CAP LOCK NUT

Using SST, remove the rack guide spring cap lock nut.
SST 09922-10010

NOTICE:

Use SST 09922-10010 in the direction shown in the illustration.

7. REMOVE RACK GUIDE SPRING CAP, RACK GUIDE SPRING, RACK GUIDE SPRING SPACER AND RACK GUIDE SUB-ASSEMBLY

(a) Using a hexagon wrench (19 mm), remove the rack guide spring cap.

(b) Remove the rack guide spring, rack guide spring spacer and rack guide sub-assembly.

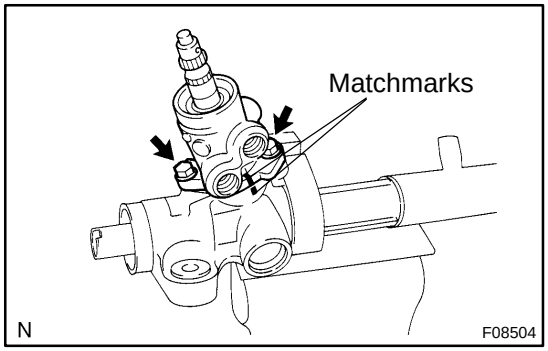

8. REMOVE CONTROL VALVE ASSEMBLY

(a) Place matchmarks on the control valve housing and rack housing.

(b) Remove the 2 bolts.

(c) Pull out the control valve assembly.

(d) Remove the gasket.

9. REMOVE CYLINDER END STOPPER

(a) Using needle nose pliers, remove the snap ring.

(b) Pull out the cylinder end stopper.

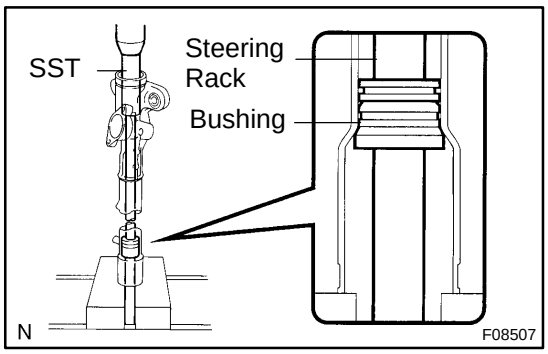

10. REMOVE STEERING RACK WITH BUSHING

(a) Using SST, press out the steering rack with the bushing.
SST 09950-70010 (09951-07200)

NOTICE:

Take care not to drop the steering rack.

(b) Remove the O-ring from the bushing.

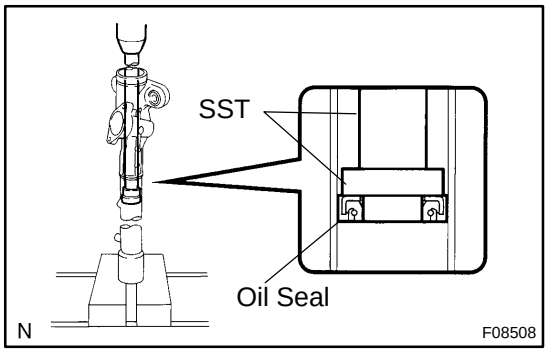

11. REMOVE OIL SEAL

Using SST, press out the oil seal.
SST 09950-60010 (09951-00240),
09950-70010 (09951-07360)

NOTICE:

Do not damage the rack housing.

SR0W6-02

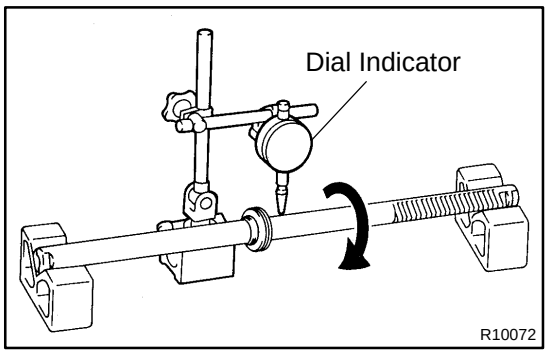

INSPECTION

NOTICE:

When using a vise, do not overtighten it.

1. INSPECT STEERING RACK

(a) Using a dial indicator, check the rack for runout, teeth wear and damage.

Maximum runout: 0.1 mm (0.004 in.)

(b) Check the back surface for wear and damage.

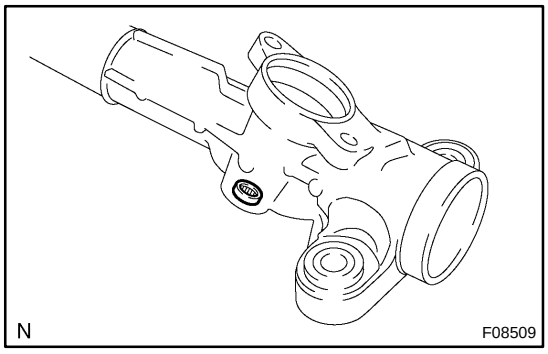

2. INSPECT BEARING

(a) Check the needle roller bearing for pitmarks or damage. If faulty, replace the rack housing.

(b) Coat the inside of the bearing with molybdenum disulfide lithium base grease.

SR0ZT-02

INSTALLATION

1. INSTALL ENGINE REAR MOUNT INSULATOR AND ENGINE REAR MOUNT BRACKET

(a) Install the engine rear mount bracket with the 3 bolts.
Torque: 49 N·m (500 kgf·cm, 36 ft·lbf)

(b) Install the engine rear mount insulator with the through bolt and No. 2 engine rear mount bracket.
Torque: 64 N·m (650 kgf·cm, 47 ft·lbf)

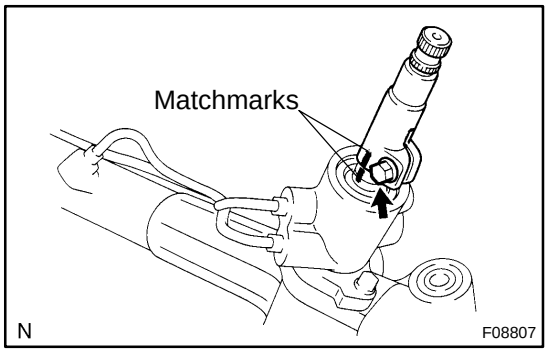

2. INSTALL PS GEAR ASSEMBLY

(a) Align the matchmarks on the No. 3 intermediate shaft assembly and control valve shaft.

(b) Install the No. 3 intermediate shaft assembly with the bolt.
Torque: 28 N·m (290 kgf·cm, 21 ft·lbf)

(c) Install the grommet and bracket to the PS gear assembly.

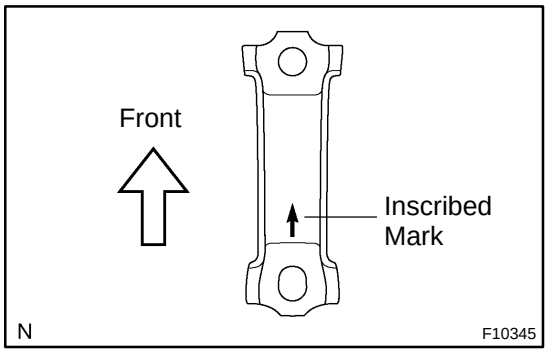

HINT:
Install the bracket with the inscribed mark facing to the front of the vehicle.

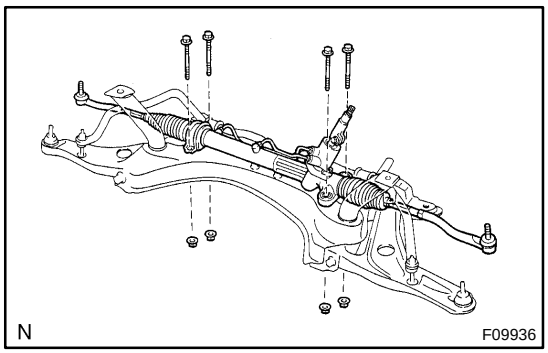

(d) Install the PS gear assembly with the 4 bolts and nuts to the front suspension member.
Torque: 74 N·m (750 kgf·cm, 54 ft·lbf)

NOTICE:
Because the nut has its own stopper, do not turn the nut and torque the bolt with the nut fixed.

(e) Install the column hole cover sub-assembly.

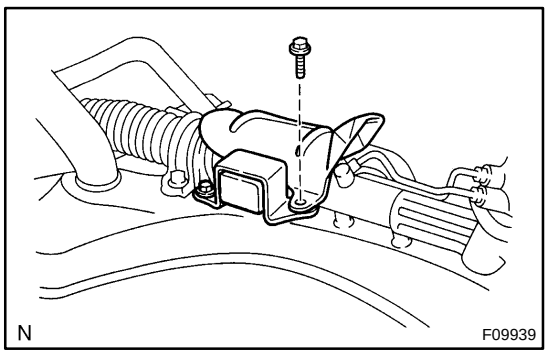

(f) Install the dynamic damper and rack housing heat insulator with the 2 bolts as sown in the illustration.
Torque: 18 N·m (180 kgf·cm, 13 ft·lbf)

(g) Install the bolt of the rack housing heat insulator.
Torque: 35 N·m (360 kgf·cm, 26 ft·lbf)

(h) Install the stabilizer bar (See page SA-39).

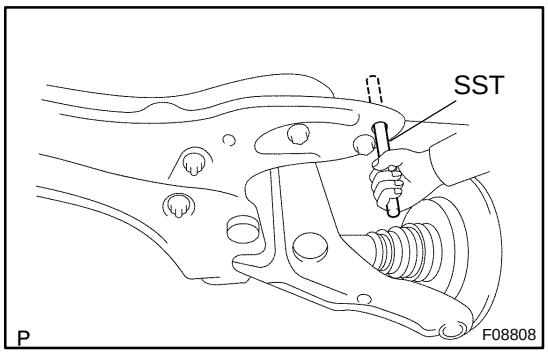

3. INSTALL FRONT SUSPENSION MEMBER WITH LOWER SUSPENSION ARM AND PS GEAR ASSEMBLY

(a) Using SST, align the holes of the front suspension member and body.
SST 09670-00010

(b) Employ the same manner described above to the other side.

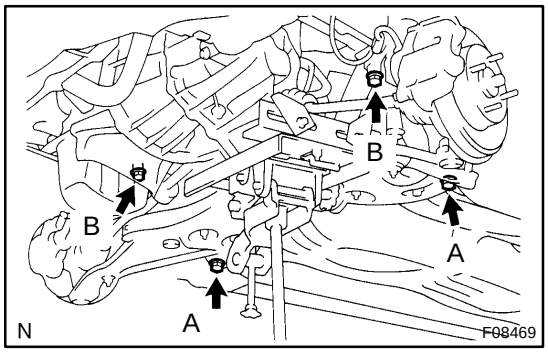

(c) Install the front suspension member with lower suspension arm and PS gear assembly with the 4 bolts.
Torque:
Bolt A: 116 N·m (1,180 kgf·cm, 85 ft·lbf)
Bolt B: 70 N·m (715 kgf·cm, 52 ft·lbf)

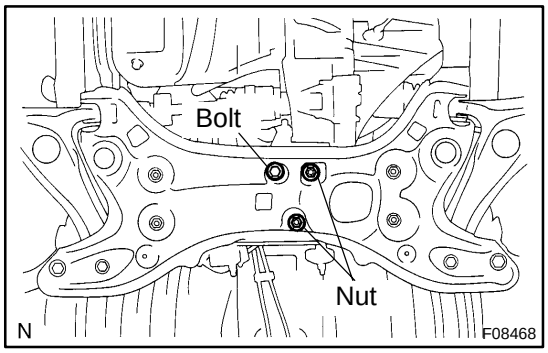

4. CONNECT ENGINE REAR MOUNT INSULATOR AND FRONT SUSPENSION MEMBER

Connect the engine rear mount insulator and front suspension member with the bolt and 2 nuts.
Torque: 80 N·m (810 kgf·cm, 59 ft·lbf)

5. CONNECT LOWER SUSPENSION ARM TO STEERING KNUCKLE (See page SA-35)

6. DISENGAGE ENGINE SLING DEVICE FROM ENGINE HANGERS

(a) Disengage the engine chain hoist from the engine hangers.

(b) Remove the 2 No. 1 engine hangers.

7. INSTALL ENGINE HOOD (See page BO-6)

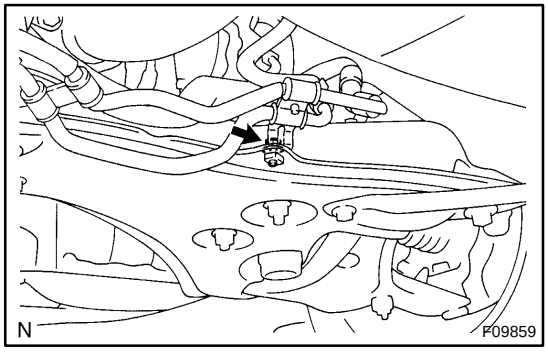

8. CONNECT TUBE CLAMP

(a) Temporarily connect the pressure feed and return tubes.

(b) Connect the tube clamp with the bolt.
Torque: 7.8 N·m (80 kgf·cm, 69 in.·lbf)

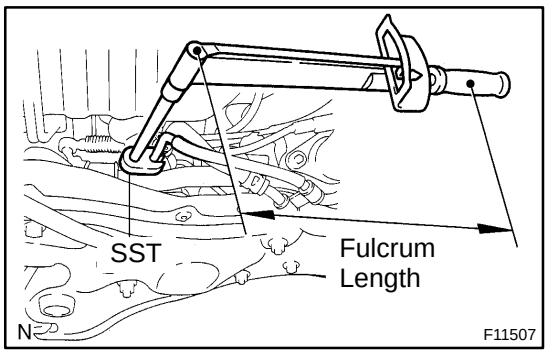

9. CONNECT PRESSURE FEED AND RETURN TUBES

(a) Using SST, connect the pressure feed and return tubes.
SST 09023-12900
Torque: 27 N·m (280 kgf·cm, 20 ft·lbf)

HINT:

- Use a torque wrench with a fulcrum length of 300 mm (11.81 in.).
- This torque value is effective in case that SST is parallel to a torque wrench.

(b) Connect the return hose with the clip.

(c) Connect the column hole cover sub-assembly.

10. CONNECT SLIDING YOKE (See page SR-20)

11. INSTALL NO. 2 COLUMN HOLE COVER (See page SR-20)

12. CONNECT RH AND LH TIE ROD ENDS (See page SA-14)

13. INSTALL RH AND LH ENGINE UNDER COVERS

14. PLACE FRONT WHEELS FACING STRAIGHT AHEAD

HINT:

Do it with the front of the vehicle jacked up.

15. CENTER SPIRAL CABLE (See page SR-20)

16. INSTALL STEERING WHEEL

(a) Align the matchmarks on the steering wheel and steering column main shaft.

(b) Temporarily tighten the steering wheel set nut.

17. BLEED POWER STEERING SYSTEM (See page SR-4)

18. CHECK STEERING WHEEL CENTER POINT

19. TORQUE STEERING WHEEL SET NUT
Torque: 50 N·m (510 kgf·cm, 37 ft·lbf)

20. INSTALL STEERING WHEEL PAD (See page SR-20)

21. CHECK FRONT WHEEL ALIGNMENT (See page SA-5)

SR0ZS-02

REASSEMBLY

NOTICE:

When using a vise, do not overtighten it.

1. COAT PARTS INDICATED BY ARROWS WITH POWER STEERING FLUID OR MOLYBDENUM DISULFIDE LITHIUM BASE GREASE (See page SR-45)

2. INSTALL OIL SEAL

(a) Coat a new oil seal lip with power steering fluid.

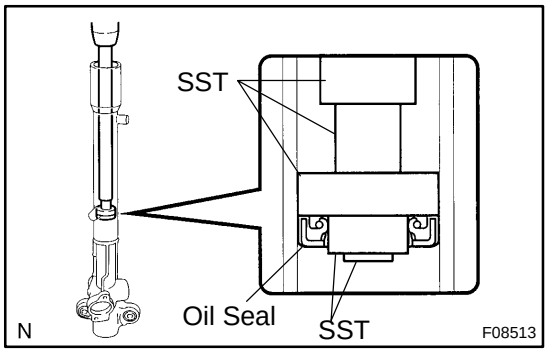

(b) Install the oil seal to SST, and press them into the rack housing.

SST 09950- 60010 (09951- 00210, 09951- 00370, 09952-06010), 09950-70010 (09951-07360)

NOTICE:

- **Make sure that the oil seal is installed facing in the correct direction.**
- **Take care that the oil seal does not get reversed as you install it.**

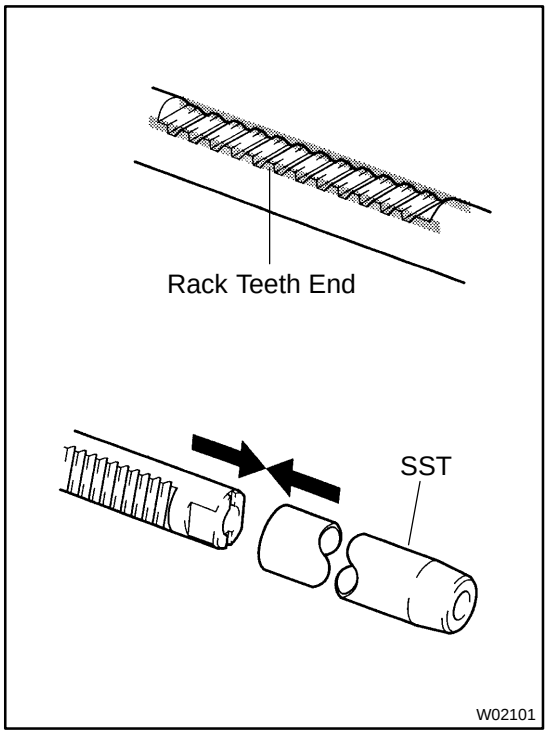

3. INSTALL STEERING RACK

(a) Install SST to the rack.

SST 09631-10041

HINT:

If necessary, scrape the burrs off the rack teeth end and burnish.

(b) Coat SST with power steering fluid.

(c) Install the steering rack into the rack housing.

(d) Remove the SST.

SST 09631-10041

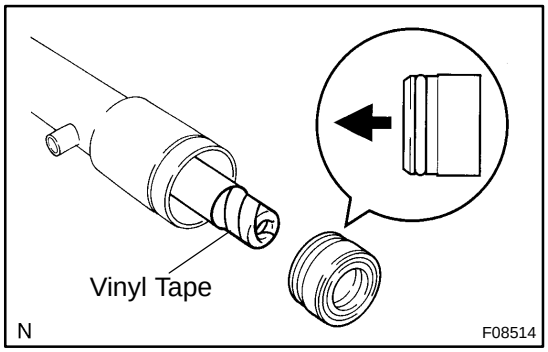

4. INSTALL BUSHING

(a) Coat a new O-ring with power steering fluid and install it to the bushing.

(b) To prevent oil seal lip damage, wind vinyl tape on the steering rack end, and apply power steering fluid.

(c) Install the bushing into the rack housing.

NOTICE:

- **Make sure that the bushing is installed facing in the correct direction.**
- **Be careful not to damage the oil seal lip.**

5. INSTALL CYLINDER END STOPPER

(a) Push into the cylinder end stopper.

(b) Using needle nose pliers, install the snap ring.

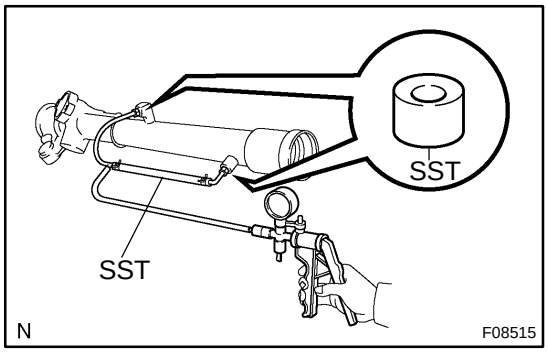

6. AIR TIGHTNESS TEST

(a) Install SST to the rack housing.
SST 09631-12071 (09633-00010)

(b) Apply 53 kPa (400 mmHg, 15.75 in.Hg) of vacuum for about 30 seconds.

(c) Check that there is no change in the vacuum.

If there is a change in the vacuum, check the installation of the oil seals.

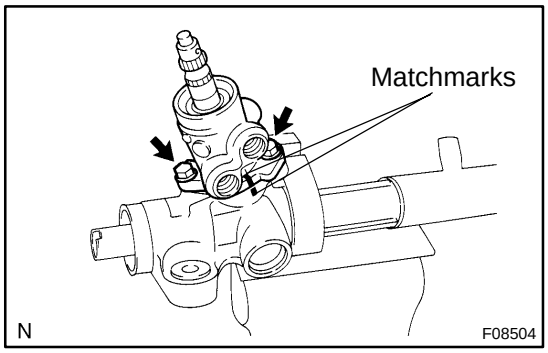

7. INSTALL CONTROL VALVE ASSEMBLY

(a) Install a new gasket.

(b) Align the matchmarks on the control valve housing and rack housing.

(c) Push into the control valve assembly.

(d) Install the 2 bolts.
Torque: 21 N·m (220 kgf·cm, 15 ft·lbf)

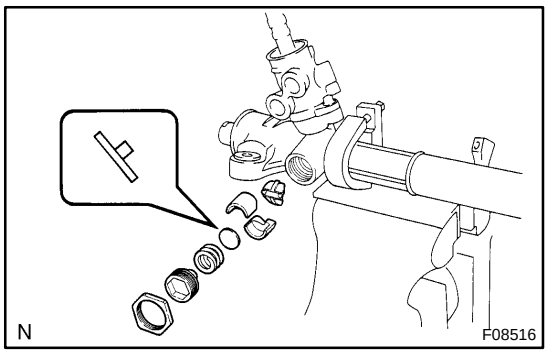

8. INSTALL RACK GUIDE SUB- ASSEMBLY, RACK GUIDE SPRING SPACER, RACK GUIDE SPRING AND RACK GUIDE SPRING CAP

(a) Install the rack guide sub-assembly, rack guide spring spacer and rack guide spring.

NOTICE:

Make sure that the rack guide spring spacer is installed facing in the correct direction.

(b) Apply sealant to 2 or 3 threads of the rack guide spring cap.
Sealant:
Part No. 08833-00080, THREE BOND 1344, LOCTITE 242 or equivalent

(c) Temporarily install the rack guide spring cap.

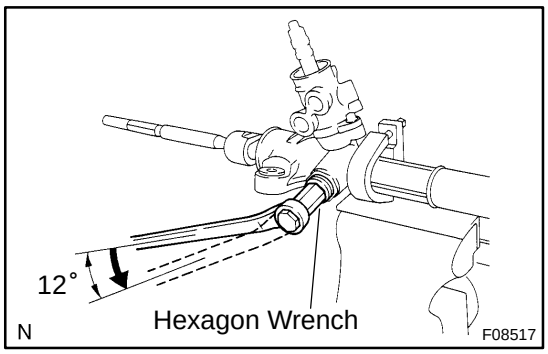

9. ADJUST TOTAL PRELOAD

(a) To prevent the steering rack teeth from damaging the oil seal lip, temporarily install the RH and LH rack ends.

(b) Using a hexagon wrench (19 mm), torque the rack guide spring cap.
Torque: 25 N·m (250 kgf·cm, 18 ft·lbf)

(c) Using a hexagon wrench (19 mm), return the rack guide spring cap 12°.

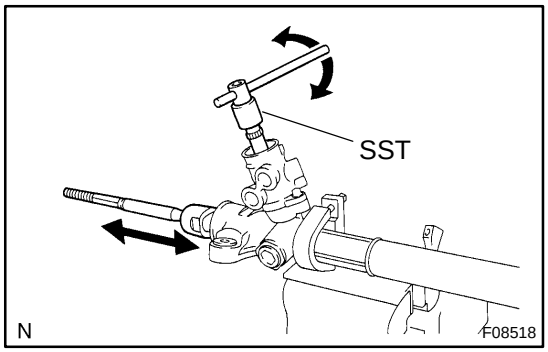

(d) Using SST, turn the control valve shaft right and left 1 or 2 times.
SST 09616-0001 1

(e) Using a hexagon wrench (19 mm), loosen the rack guide spring cap until the rack guide spring is not functioning.

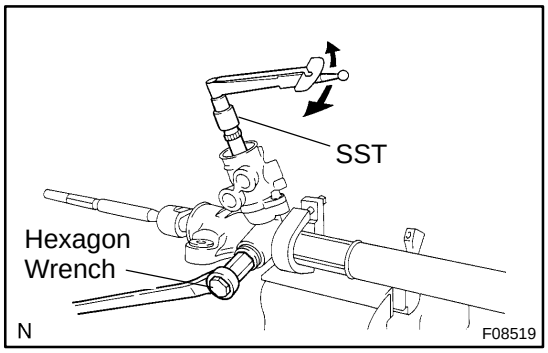

(f) Using SST, a torque wrench and hexagon wrench (19 mm), tighten the rack guide spring cap until the preload is within the specification.
SST 09616-0001 1
Preload (turning):
1.2 - 1.4 N·m (12 - 14 kgf·cm, 10.4 - 12.2 in.·lbf)

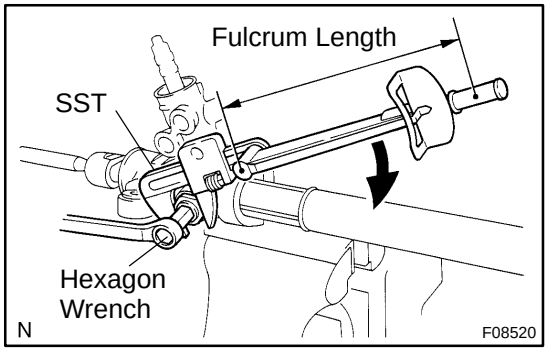

10. INSTALL RACK GUIDE SPRING CAP LOCK NUT

(a) Apply sealant to 2 or 3 threads of the rack guide spring cap lock nut.
Sealant:
Part No. 08833-00080, THREE BOND 1344, LOCTITE 242 or equivalent

(b) Temporarily install the rack guide spring cap lock nut.

(c) Using a hexagon wrench (19 mm), hold the rack guide spring cap and using SST, torque the rack guide spring cap lock nut.
SST 09922-10010
Torque: 28 N·m (290 kgf·cm, 21 ft·lbf)

NOTICE:
Use SST 09922-10010 in the direction shown in the illustration.

HINT:
Use a torque wrench with a fulcrum length of 345 mm (13.58 in.).

(d) Recheck the total preload.
Preload (turning):
1.2 - 1.4 N·m (12 - 14 kgf·cm, 10.4 - 12.2 in.·lbf)
(e) Remove the RH and LH rack ends.

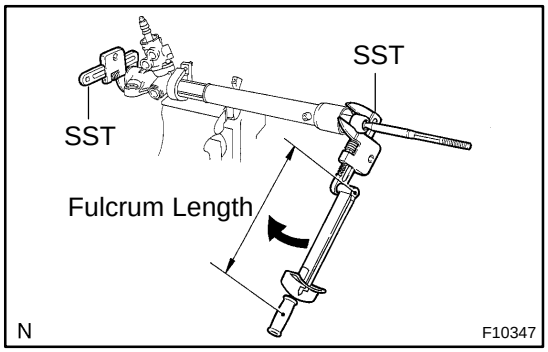

11. INSTALL RH AND LH RACK ENDS
(a) Temporarily install the RH rack end.
(b) Using SST, hold the steering rack LH side steadily and using another SST, torque the RH rack end.
SST 09922-10010
Torque: 62 N·m (630 kgf·cm, 46 ft·lbf)
NOTICE:
Use SST 09922-10010 in the direction shown in the illustration.
HINT:
Use a torque wrench with a fulcrum length of 380 mm (14.96 in.).
(c) Temporarily install the LH rack end.

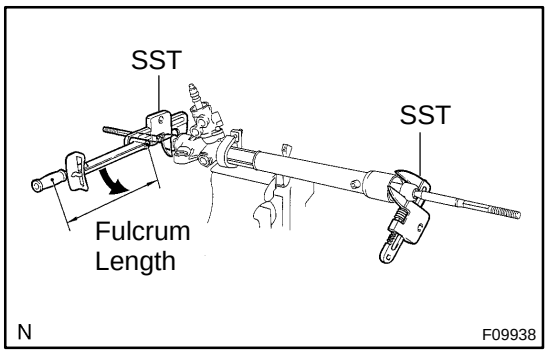

(d) Using SST, hold the RH rack end steadily and using another SST, torque the LH rack end.
SST 09922-10010
Torque: 62 N·m (630 kgf·cm, 46 ft·lbf)
NOTICE:
Use SST 09922-10010 in the direction shown in the illustration.
HINT:
Use a torque wrench with a fulcrum length of 380 mm (14.96 in.).

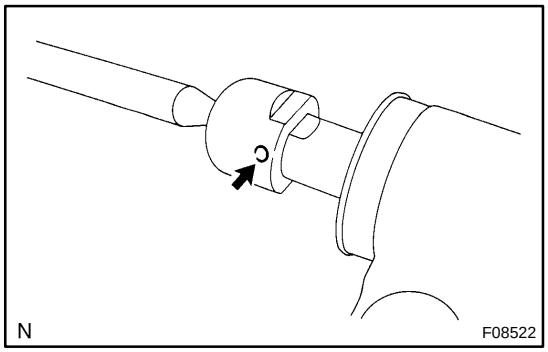

12. INSTALL RH AND LH RACK BOOTS, CLAMPS AND CLIPS
(a) Ensure that the steering rack end hole is not clogged with grease.
HINT:
If the hole is clogged, the pressure inside the boot will change after it is assembled and the steering wheel is turned.
(b) Install the boot, clip and a new clamp.
NOTICE:
Be careful not to damage or twist the boot.

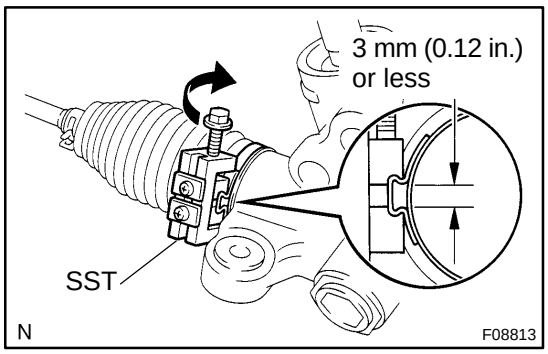

(c) Using SST, tighten the clamp as shown in the illustration.
SST 09521-24010

(d) Employ the same manner described above to the other side.

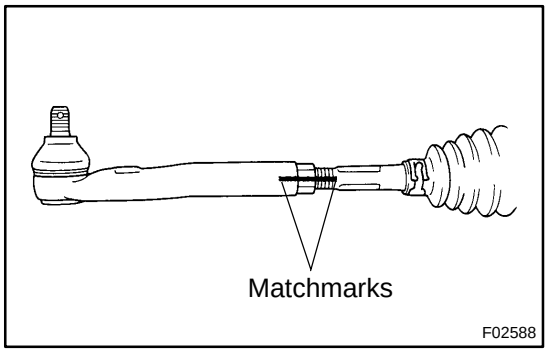

13. INSTALL RH AND LH TIE ROD ENDS AND LOCK NUTS

(a) Screw the lock nut and tie rod end onto the rack end until the matchmarks are aligned.

(b) After adjusting toe-in, torque the nut (See page SA-5).
Torque: 47 N·m (480 kgf·cm, 35 ft·lbf)

(c) Employ the same manner described above to the other side.

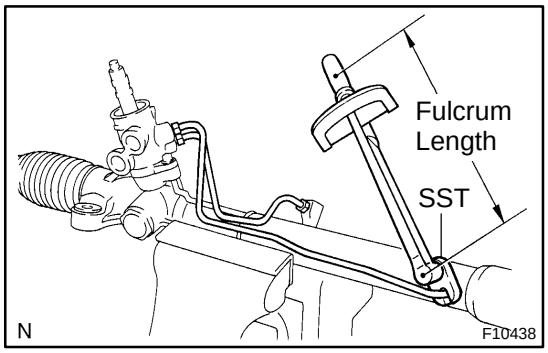

14. INSTALL 2 TURN PRESSURE TUBES

(a) Coat 4 new O-rings with power steering fluid and install them to 2 turn pressure tubes.

(b) Using SST, install the 2 turn pressure tubes.
SST 09023-38200
Torque: 11 N·m (110 kgf·cm, 8 ft·lbf)

HINT:

- Use a torque wrench with a fulcrum length of 250 mm (9.84 in.).
- This torque value is effective in case that SST is parallel to a torque wrench.

SR0ZP-02

REMOVAL

NOTICE:

Remove the steering wheel assembly before the steering gear removal, because there is possibility of breaking of the spiral cable.

1. **PLACE FRONT WHEELS FACING STRAIGHT AHEAD**
2. **REMOVE STEERING WHEEL PAD (See page SR-13)**
3. **REMOVE STEERING WHEEL (See page SR-13)**
4. **REMOVE RH AND LH ENGINE UNDER COVERS**
5. **DISCONNECT RH AND LH TIE ROD ENDS (See page SA-10)**
6. **REMOVE NO. 2 COLUMN HOLE COVER (See page SR-13)**
7. **DISCONNECT SLIDING YOKE (See page SR-13)**

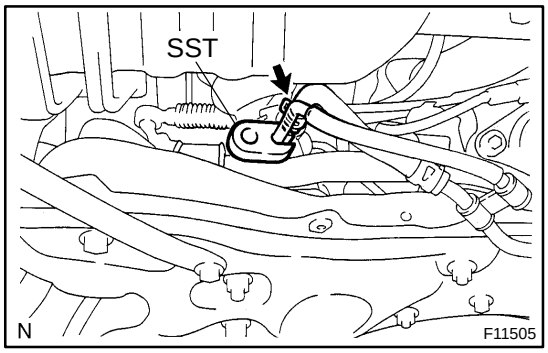

8. **DISCONNECT PRESSURE FEED AND RETURN TUBES**

(a) Disconnect the column hole cover sub-assembly.

(b) Remove the clip and disconnect the return hose.

(c) Using SST, disconnect the pressure feed and return tubes.

SST 09023-12900

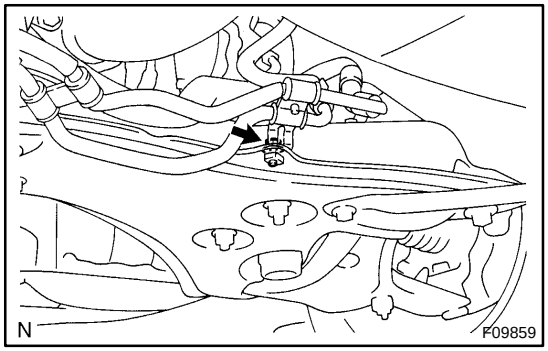

9. **DISCONNECT TUBE CLAMP**

Remove the bolt and disconnect the tube clamp.

10. **REMOVE ENGINE HOOD (See page BO-6)**

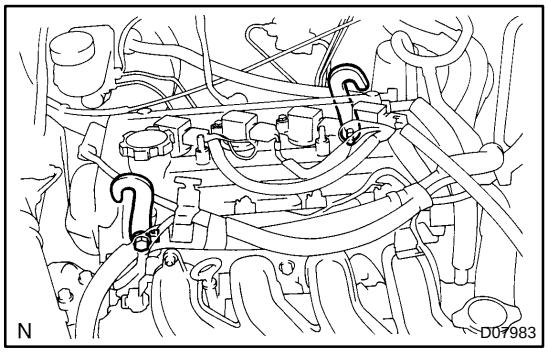

11. **ATTACH ENGINE SLING DEVICE TO ENGINE HANGERS**

(a) Install the 2 No. 1 engine hangers with the bolt in the correct direction.

Parts No.:

No. 1 engine hanger: 12281-21010

Bolt: 91511-60818

Torque: 20 N·m (200 kgf·cm, 14 ft·lbf)

(b) Attach the engine chain hoist to the engine hangers.

CAUTION:
Do not attempt to hang the engine by hooking the chain to any other part.

12. DISCONNECT LOWER SUSPENSION ARM FROM STEERING KNUCKLE (See page SA-33)

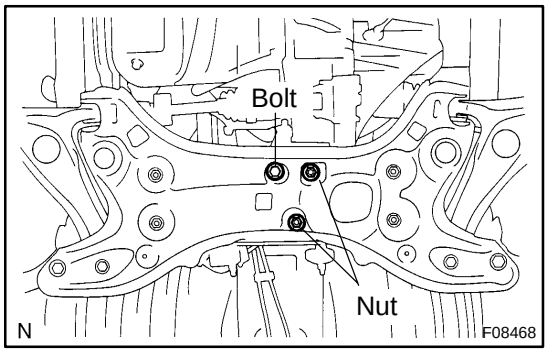

13. DISCONNECT ENGINE REAR MOUNT INSULATOR AND FRONT SUSPENSION MEMBER

Remove the bolt and 2 nuts, and disconnect the engine rear mount insulator and front suspension member.

14. SUPPORT FRONT SUSPENSION MEMBER WITH LOWER SUSPENSION ARM

Using a transmission jack, support the front suspension member with lower suspension arm.

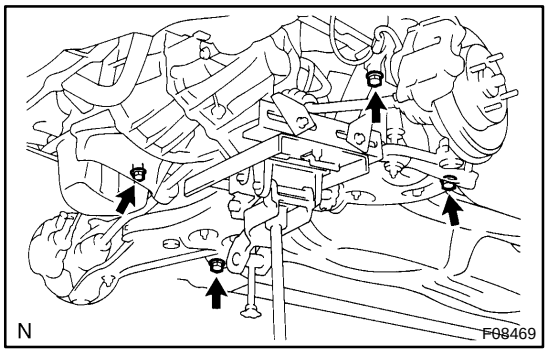

15. REMOVE FRONT SUSPENSION MEMBER WITH LOWER SUSPENSION ARM AND PS GEAR ASSEMBLY

Remove the 4 bolts and front suspension member with lower suspension arm and PS gear assembly.

16. REMOVE PS GEAR ASSEMBLY

(a) Remove the stabilizer bar (See page SA-37).
(b) Remove the bolt of the rack housing heat insulator.
(c) Remove the 2 bolts, rack housing heat insulator and dynamic damper.
(d) Remove the column hole cover sub-assembly.
(e) Remove the 4 bolts, nuts and PS gear assembly from the front suspension member.

NOTICE:
Because the nut has its own stopper, do not turn the nut and torque the bolt with the nut fixed.

(f) Remove the bracket and grommet from the PS gear assembly.

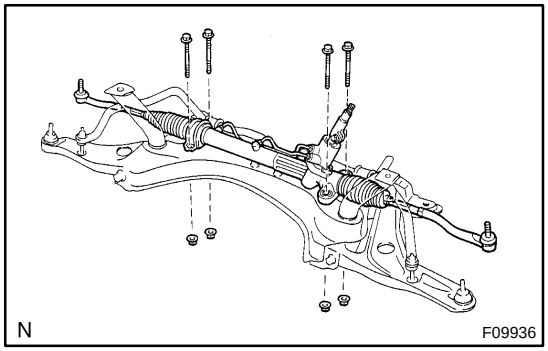

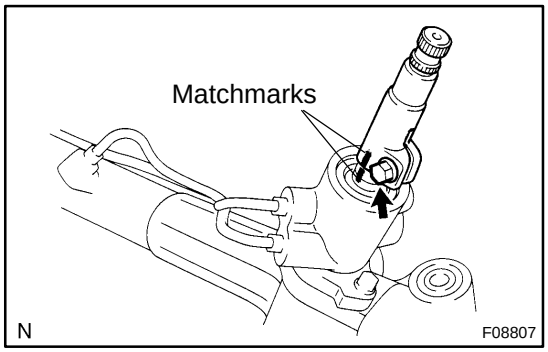

(g) Place matchmarks on the No. 3 intermediate shaft assembly and control valve shaft.
(h) Remove the bolt and No. 3 intermediate shaft assembly.

17. REMOVE ENGINE REAR MOUNT INSULATOR AND ENGINE REAR MOUNT BRACKET

(a) Remove the through bolt, No. 2 engine rear mount bracket and engine rear mount insulator.
(b) Remove the 3 bolts and engine rear mount bracket.

SR0ZR-02

REPLACEMENT

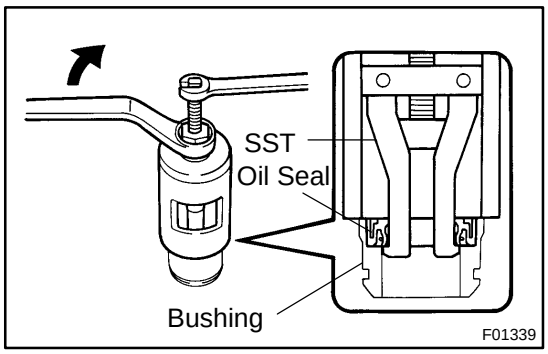

NOTICE:

When using a vise, do not overtighten it.

1. IF NECESSARY, REPLACE OIL SEAL

(a) Using SST, remove the oil seal from the bushing.
SST 09612-24014 (09613-22011)

NOTICE:

Be careful not to damage the bushing.

HINT:

As shown in the illustration, from the opposite side of SST confirm that its claws are firmly caught on the oil seal.

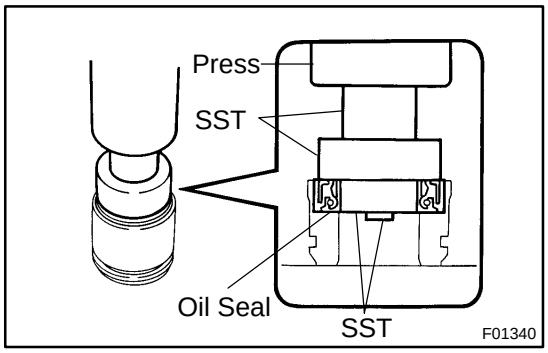

(b) Coat a new oil seal lip with power steering fluid.

(c) Using SST, press in the oil seal.
SST 09950-60010 (09951-00210, 09951-00340, 09952-06010), 09950-70010 (09951-07100)

NOTICE:

Make sure that the oil seal is installed facing in the correct direction.

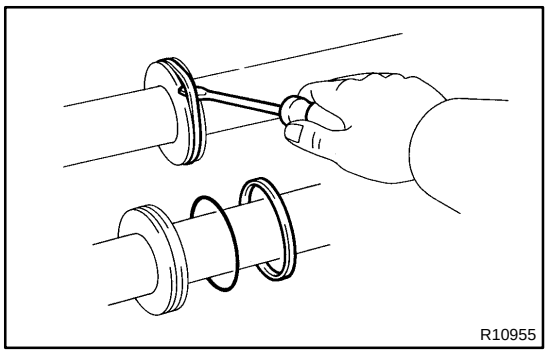

2. IF NECESSARY, REPLACE TEFLON RING AND O-RING

(a) Using a screwdriver, remove the teflon ring and O-ring from the steering rack.

NOTICE:

Be careful not to damage the groove for the teflon ring.

(b) Coat a new O-ring with power steering fluid and install it to the steering rack.

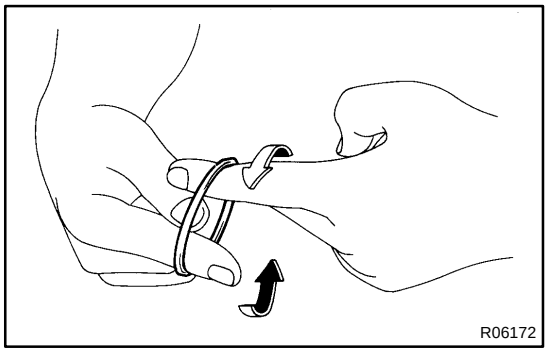

(c) Expand a new teflon ring with your fingers.

NOTICE:

Be careful not to overexpand the teflon ring.

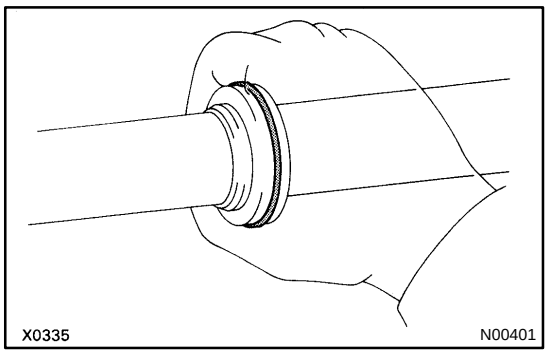

(d) Coat the teflon ring with power steering fluid.
(e) Install the teflon ring to the steering rack and settle it down with your fingers.
(f) Using a screwdriver, remove the 4 teflon rings from the control valve assembly.

POWER STEERING VANE PUMP

COMPONENTS

SR0VQ-03

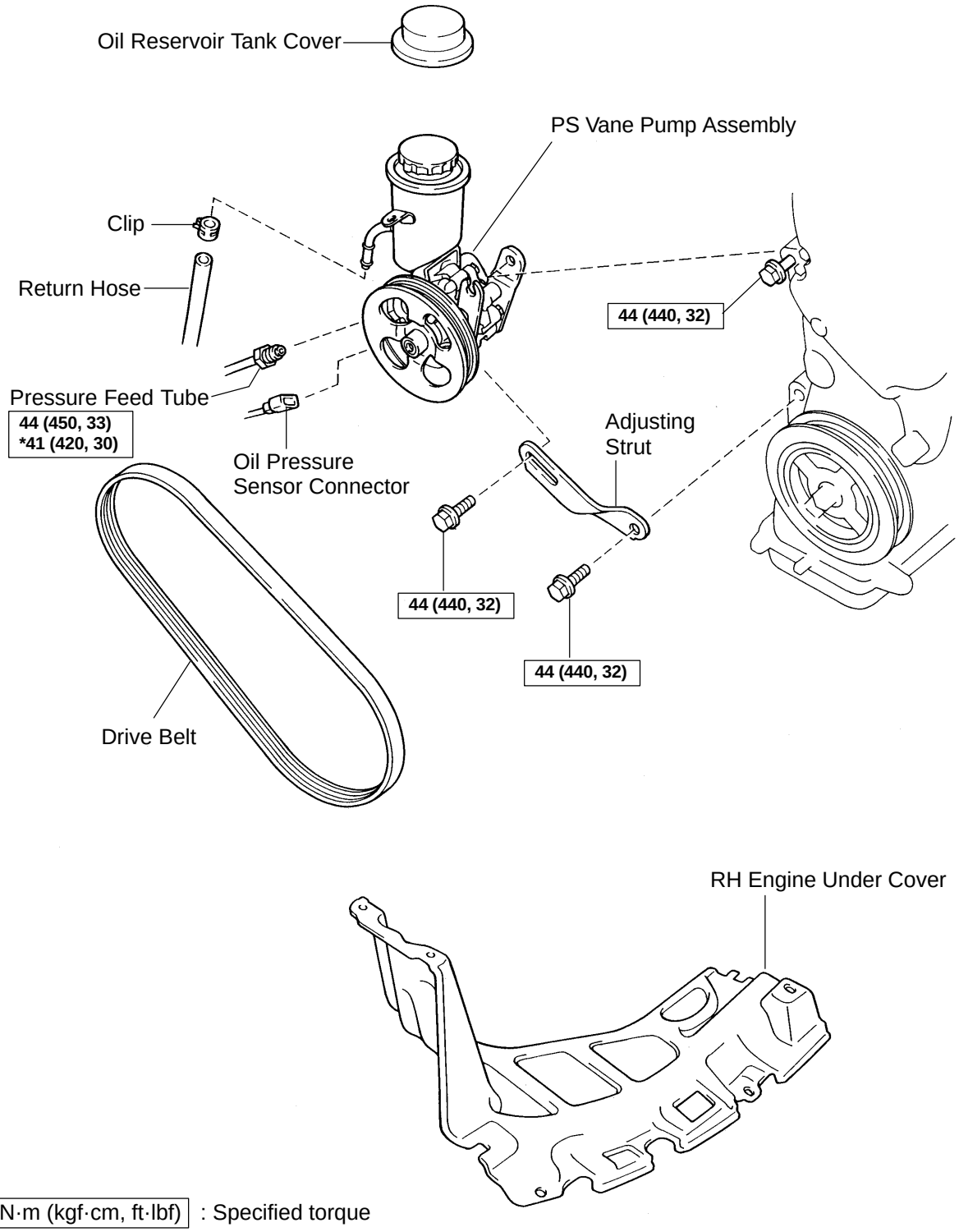

N·m (kgf·cm, ft·lbf) : Specified torque
◆ Non-reusable part
* For use with SST

N

F08882

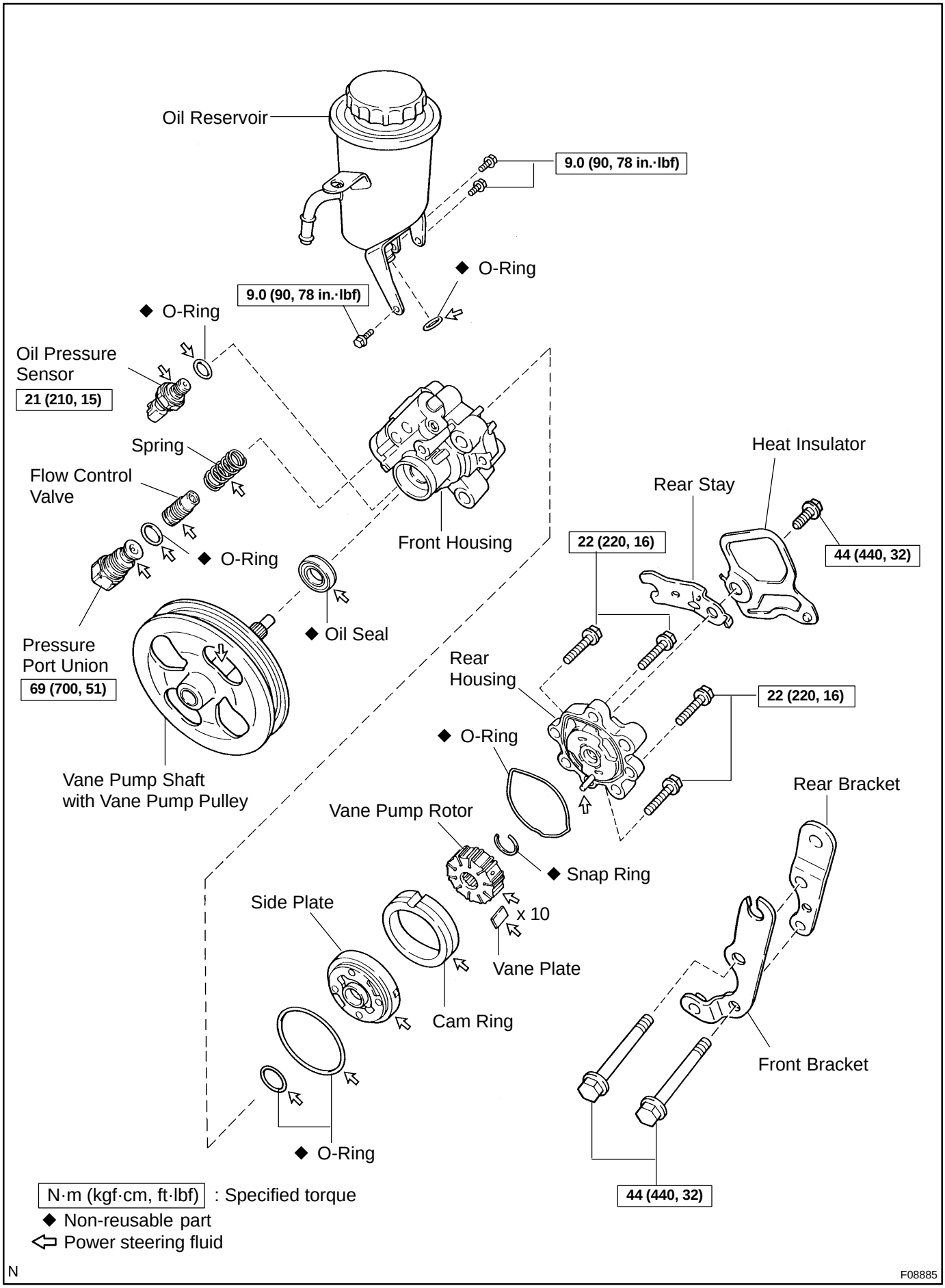
Oil Reservoir
9.0 (90, 78 in.·lbf)
◆ O-Ring
9.0 (90, 78 in.·lbf)
◆ O-Ring
Oil Pressure Sensor
21 (210, 15)
Spring
Flow Control Valve
◆ O-Ring
Front Housing
Heat Insulator
Rear Stay
22 (220, 16)
44 (440, 32)
Pressure Port Union
69 (700, 51)
◆ Oil Seal
Rear Housing
22 (220, 16)
◆ O-Ring
Vane Pump Shaft with Vane Pump Pulley
Rear Bracket
Vane Pump Rotor
◆ Snap Ring
x 10
Side Plate
Vane Plate
Cam Ring
Front Bracket
◆ O-Ring
44 (440, 32)
N·m (kgf·cm, ft·lbf) : Specified torque
◆ Non-reusable part
⇦ Power steering fluid
N
F08885

SR0VS-03

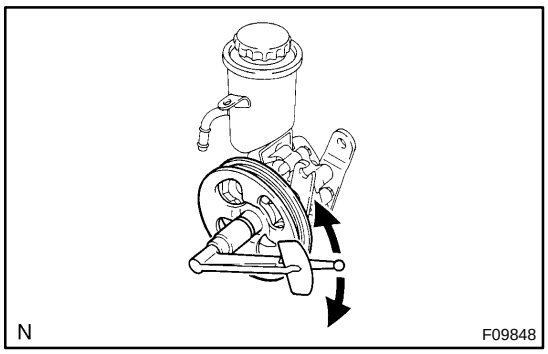

DISASSEMBLY

NOTICE:

When using a vise, do not overtighten it.

1. MEASURE PS VANE PUMP ROTATING TORQUE

(a) Check that the pump rotates smoothly without abnormal noise.

(b) Using a torque wrench, check the pump rotating torque.

Rotating torque:

0.27 N·m (2.8 kgf·cm, 2.4 in.·lbf) or less

2. REMOVE OIL RESERVOIR

(a) Remove the 3 bolts and oil reservoir.

(b) Remove the O-ring from the oil reservoir.

3. REMOVE HEAT INSULATOR AND REAR STAY

Remove the bolt, heat insulator and rear stay.

4. REMOVE FRONT AND REAR BRACKETS

Remove the 2 bolts, front and rear brackets.

5. REMOVE PRESSURE PORT UNION, FLOW CONTROL VALVE AND SPRING

(a) Remove the pressure port union, flow control valve and spring.

(b) Remove the O-ring from the pressure port union.

6. REMOVE OIL PRESSURE SENSOR

(a) Remove the oil pressure sensor.

(b) Remove the O-ring from the oil pressure sensor.

7. REMOVE REAR HOUSING

(a) Remove the 4 bolts and rear housing.

(b) Remove the O-ring from the rear housing.

8. REMOVE CAM RING, 10 VANE PLATES, VANE PUMP ROTOR AND SIDE PLATE

(a) Remove the cam ring and 10 vane plates.

NOTICE:

Take care not to drop the vane plate.

(b) Using a screwdriver, remove the snap ring, vane pump rotor and side plate.

(c) Remove the 2 O-rings from the side plate.

9. REMOVE VANE PUMP SHAFT WITH VANE PUMP PULLEY

SR0VT-03

INSPECTION

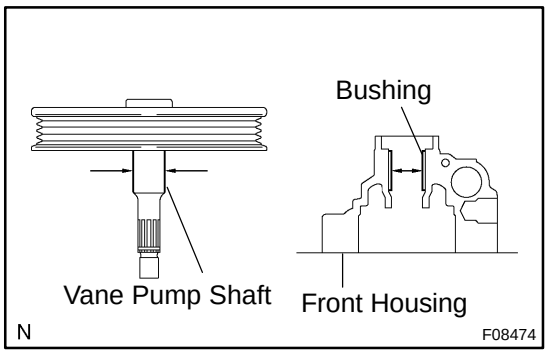

1. MEASURE OIL CLEARANCE BETWEEN VANE PUMP SHAFT AND BUSHING

Using a micrometer and a caliper gauge, measure the oil clearance.

Standard clearance:
0.021 - 0.043 mm (0.0008 - 0.0017 in.)
Maximum clearance: 0.07 mm (0.0028 in.)

If it is more than the maximum, replace the front housing and vane pump shaft.

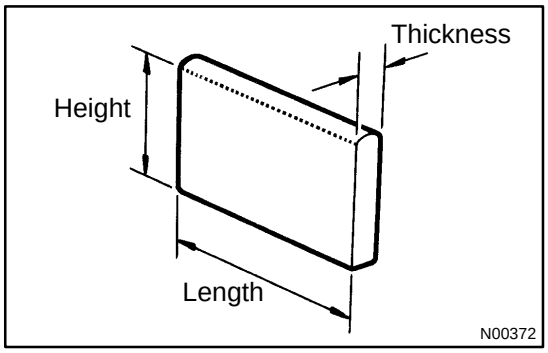

2. INSPECT VANE PUMP ROTOR AND VANE PLATES

(a) Using a micrometer, measure the height, thickness and length of the 10 vane plates.
Minimum height: 7.6 mm (0.299 in.)
Minimum thickness: 1.405 mm (0.0553 in.)
Minimum length: 11.993 mm (0.4722 in.)

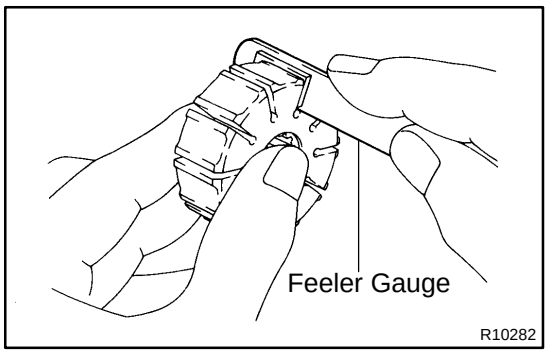

(b) Using a feeler gauge, measure the clearance between the vane pump rotor groove and vane plate.
Maximum clearance: 0.03 mm (0.0012 in.)

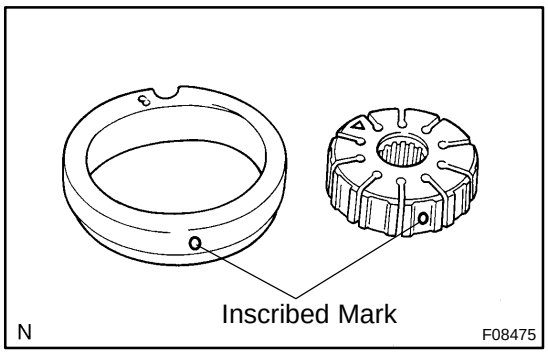

If it is more than the maximum, replace the vane plate and/or vane pump rotor with the one having the same mark stamped on the cam ring.

Inscribed mark: 0, 1, 2, 3, or 4

HINT:

There are 5 vane plate lengths corresponding to the following vane pump rotor and cam ring marks:

Vane pump rotor and cam ring mark	Vane plate part number	Vane plate length mm (in.)
0	44345 - 32100	12.001 - 12.003 (0.47248 - 0.47256)
1	44345 - 32110	11.999 - 12.001 (0.47240 - 0.47248)
2	44345 - 32120	11.997 - 11.999 (0.47232 - 0.47240)
3	44345 - 32130	11.995 - 11.997 (0.47224 - 0.47232)
4	44345 - 32140	11.993 - 11.995 (0.47216 - 0.47224)

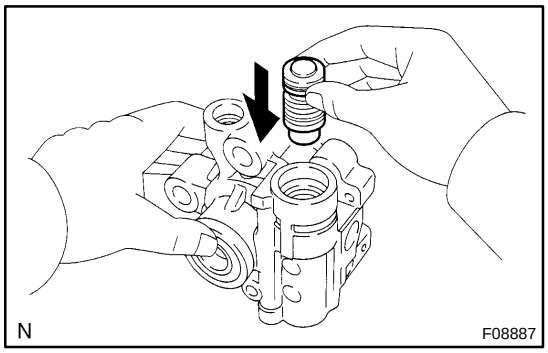

3. INSPECT FLOW CONTROL VALVE

(a) Coat the flow control valve with power steering fluid and check that it falls smoothly into the valve hole of the front housing by its own weight.

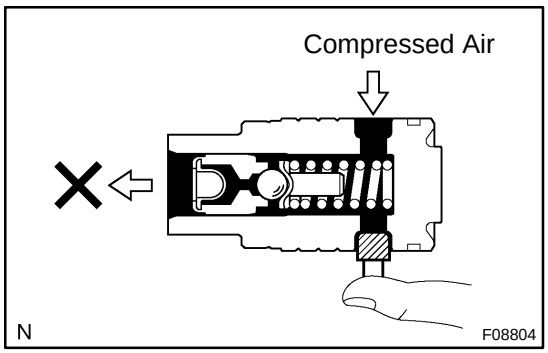

(b) Check the flow control valve for leakage. Close one of the holes and apply compressed air of 392 - 490 kPa (4 - 5 kgf/cm^2, 57 - 71 psi) into the opposite side hole, and confirm that air does not come out from the end hole.

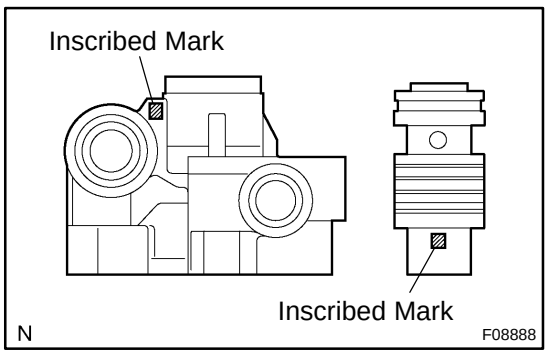

If necessary, replace the flow control valve with the one having the same letter as inscribed on the front housing.

Inscribed mark: A, B, C, D, E or F

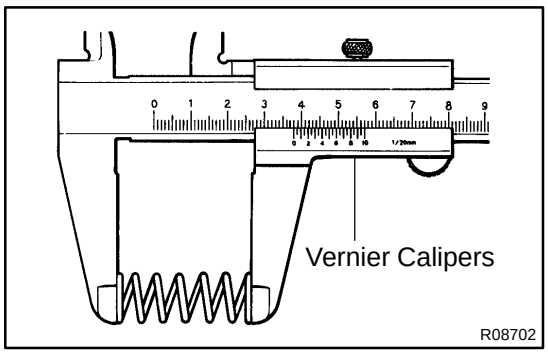

4. INSPECT SPRING

Using vernier calipers, measure the free length of the spring.

Minimum free length: 35.8 mm (1.409 in.)

If it is not within the specification, replace the spring.

SR0VW-03

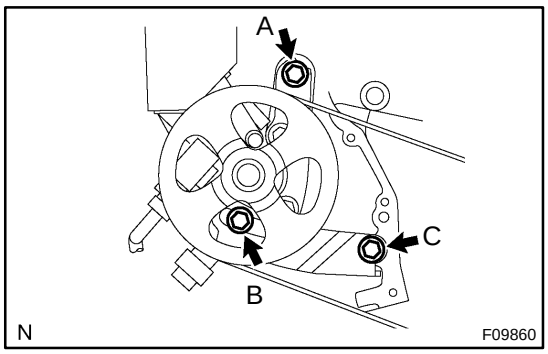

INSTALLATION

1. INSTALL PS VANE PUMP ASSEMBLY

(a) Temporarily install the PS vane pump assembly with the bolt A.

(b) Install the adjusting strut with the bolt C.
Torque: 44 N·m (440 kgf·cm, 32 ft·lbf)

(c) Temporarily install the bolt B.

2. INSTALL DRIVE BELT

(a) Install the drive belt and adjust the drive belt tension (See page SR-3).

(b) Torque the bolt A.
Torque: 44 N·m (440 kgf·cm, 32 ft·lbf)

(c) Torque the bolt B.
Torque: 44 N·m (440 kgf·cm, 32 ft·lbf)

3. CONNECT OIL PRESSURE SENSOR CONNECTOR

NOTICE:

Be careful to prevent oil from being attached to the connector.

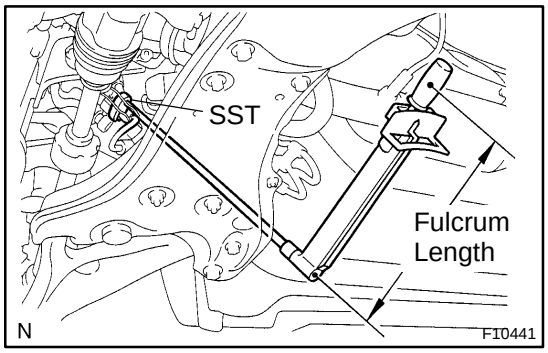

4. CONNECT PRESSURE FEED TUBE

Using SST, connect the pressure feed tube.

SST 09023-12700

Torque: 41 N·m (420 kgf·cm, 30 ft·lbf)

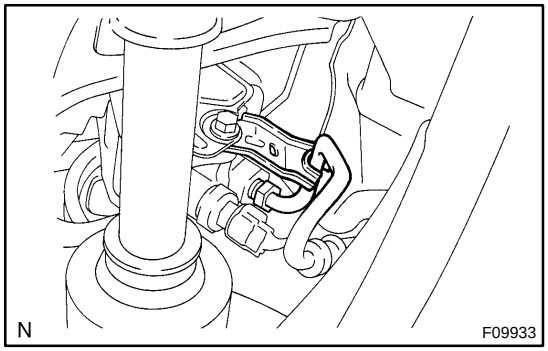

NOTICE:

Check that the pressure feed tube is properly installed to the rear stay.

HINT:

- Use a torque wrench with a fulcrum length of 345 mm (13.58 in.).
- This torque value is effective in case that SST is parallel to a torque wrench.

5. CONNECT RETURN HOSE

Connect the return hose with the clip.

6. INSTALL RH ENGINE UNDER COVER

7. BLEED POWER STEERING SYSTEM
(See page SR-4)

8. INSTALL OIL RESERVOIR TANK COVER

NOTICE:

Push the oil reservoir tank cover completely.

SR0ZB-01

REASSEMBLY

NOTICE:

When using a vise, do not overtighten it.

1. COAT PARTS INDICATED BY ARROWS WITH POWER STEERING FLUID (See page SR-22)

2. INSTALL VANE PUMP SHAFT WITH VANE PUMP PULLEY

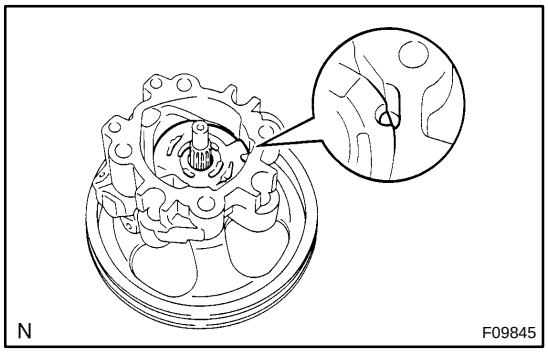

3. INSTALL SIDE PLATE

(a) Coat 2 new O-rings with power steering fluid, and install them to the side plate.

(b) Align the dent of the side plate with the dent of the front housing, and install the side plate.

NOTICE:

Make sure that the side plate is installed facing in the correct direction.

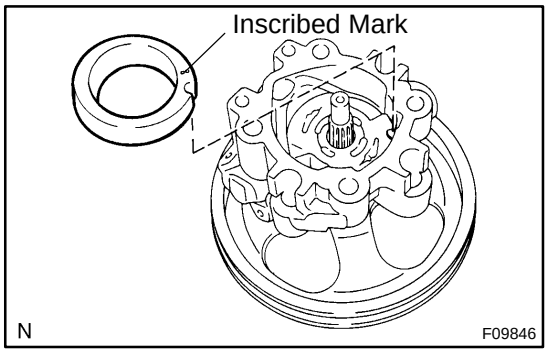

4. INSTALL CAM RING

Align the dent of the cam ring with the dent of the side plate, and install the cam ring with the inscribed mark facing outward.

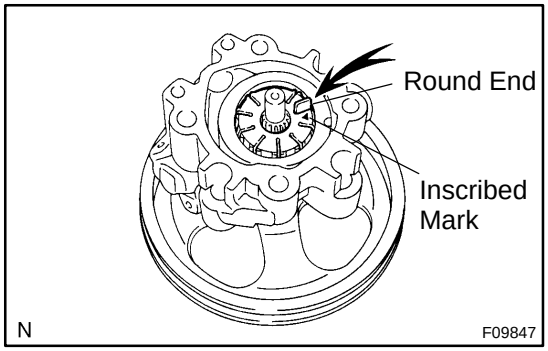

5. INSTALL VANE PUMP ROTOR

(a) Install the vane pump rotor with the inscribed mark facing outward.

(b) Install a new snap ring to the vane pump shaft.

6. INSTALL 10 VANE PLATES

Install the 10 vane plates with the round end facing outward.

7. INSTALL REAR HOUSING

(a) Coat a new O-ring with power steering fluid, and install it to the rear housing.

(b) Align the straight pin of the rear housing with the dents of the cam ring, side plate and front housing, and install the rear housing with the 4 bolts.

Torque: 22 N·m (220 kgf·cm, 16 ft·lbf)

8. INSTALL OIL PRESSURE SENSOR

(a) Coat a new O-ring with power steering fluid, and install it to the oil pressure sensor.

(b) Install the oil pressure sensor.

Torque: 21 N·m (210 kgf·cm, 15 ft·lbf)

9. INSTALL SPRING, FLOW CONTROL VALVE AND PRESSURE PORT UNION

(a) Install the spring.

(b) Install the flow control valve facing in the correct direction (See page SR-22).

(c) Coat a new O-ring with power steering fluid, and install it to the pressure port union.

(d) Install the pressure port union.

Torque: 69 N·m (700 kgf·cm, 51 ft·lbf)

10. INSTALL FRONT AND REAR BRACKETS

Install the front and rear brackets with the 2 bolts.

Torque: 44 N·m (440 kgf·cm, 32 ft·lbf)

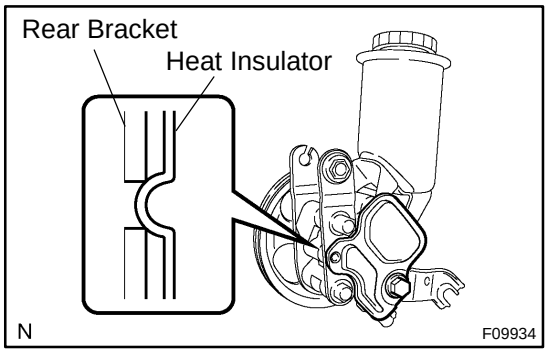

11. INSTALL HEAT INSULATOR AND REAR STAY

Install the heat insulator and rear stay with the bolt.

Torque: 44 N·m (440 kgf·cm, 32 ft·lbf)

NOTICE:

Install the heat insulator, pressing its projection into a hole in the rear bracket, as shown in the illustration.

12. INSTALL OIL RESERVOIR

(a) Coat a new O-ring with power steering fluid, and install it to the oil reservoir.

(b) Install the oil reservoir with the 3 bolts.

Torque: 9.0 N·m (90 kgf·cm, 78 in.·lbf)

13. MEASURE PS VANE PUMP ROTATING TORQUE (See page SR-25)

SR0VR-02

REMOVAL

1. REMOVE RH ENGINE UNDER COVER

2. REMOVE OIL RESERVOIR TANK COVER

3. DISCONNECT RETURN HOSE

Remove the clip, and disconnect the return hose.

NOTICE:

Take care not to spill fluid on the drive belt.

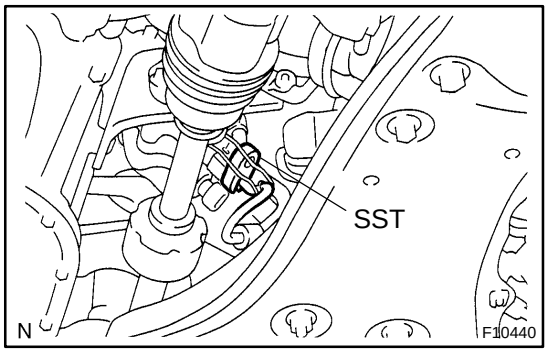

4. DISCONNECT PRESSURE FEED TUBE

Using SST, disconnect the pressure feed tube.

SST 09023-12700

5. DISCONNECT OIL PRESSURE SENSOR CONNECTOR

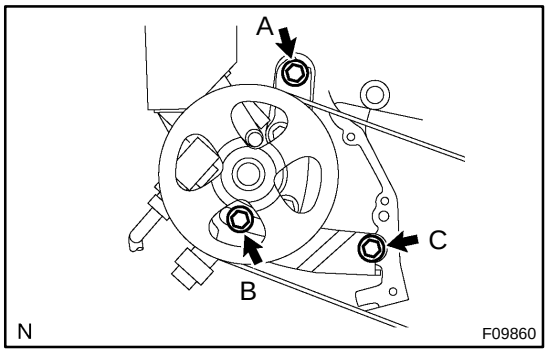

6. REMOVE DRIVE BELT

Loosen the bolt A and B, and remove the drive belt.

7. REMOVE PS VANE PUMP ASSEMBLY

(a) Remove the bolt B, bolt C and adjusting strut.

(b) Loosen the bolt A sufficiently so that PS vane pump assembly can be removed.

HINT:

Bolt A cannot be removed.

SR0VU-03

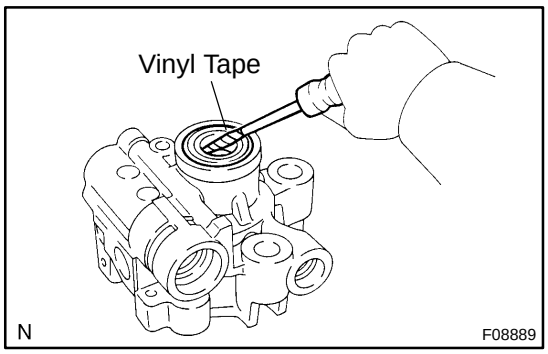

REPLACEMENT

NOTICE:

When using a vise, do not overtighten it.

IF NECESSARY, REPLACE OIL SEAL

(a) Using a screwdriver with vinyl tape wound around its tip, remove the oil seal.

NOTICE:

Be careful not to damage the bushing of the front housing.

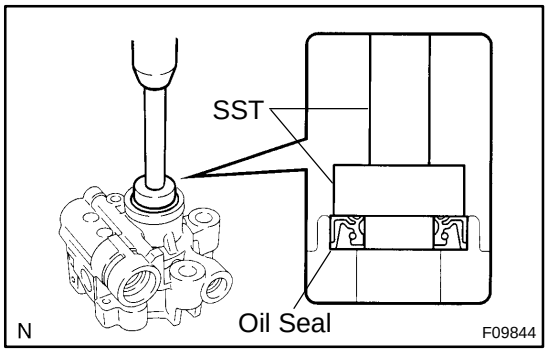

(b) Coat a new oil seal lip with power steering fluid.

(c) Using SST, press in the oil seal.

SST 09950-60010 (09951-00280),
09950-70010 (09951-07100)

NOTICE:

Make sure that the oil seal is installed facing in the correct direction.

STEERING SYSTEM

SR0L4-07

PRECAUTION

- **Care must be taken to replace parts properly because they could affect the performance of the steering system and result in a driving hazard.**
- **The ECHO is equipped with SRS (Supplemental Restraint System) such as the driver airbag and front passenger airbag. Failure to carry out service operation in the correct sequence could cause the SRS to unexpectedly deploy during servicing, possibly leading to a serious accident. Before servicing (including removal or installation of parts, inspection or replacement), be sure to read the precautionary notices in the RS section.**

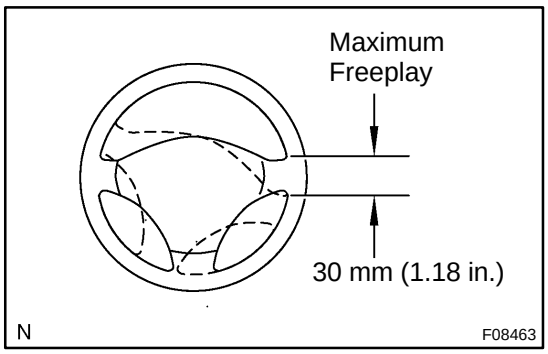

STEERING WHEEL

SR05R-18

INSPECTION

1. CHECK STEERING WHEEL FREEPLAY

(a) Stop the vehicle and face the tires straight ahead.

(b) Rock the steering wheel gently up and down with a finger lightly, check the steering wheel freeplay.

Maximum freeplay: 30 mm (1.18 in.)

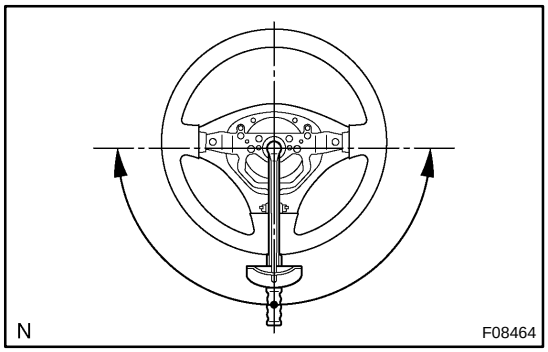

2. CHECK STEERING EFFORT

(a) Center the steering wheel.

(b) Remove the steering wheel pad (See page SR-13).

(c) Start the engine and run it at idle.

(d) Measure the steering effort in both directions.

Steering effort (Reference):

Manual steering: 28 N·m (285 kgf·cm, 21 ft·lbf)

Power steering: 6.5 N·m (65 kgf·cm, 58 in.·lbf)

HINT:

Take the tire type, pressure and contact surface into consideration before making your diagnosis.

(e) Torque the steering wheel set nut.

Torque: 50 N·m (510 kgf·cm, 37 ft·lbf)

(f) Install the steering wheel pad (See page SR-20).

SR1HO-05

REPAIR PROCEDURES

HINT:

This is the repair procedure for steering off center.

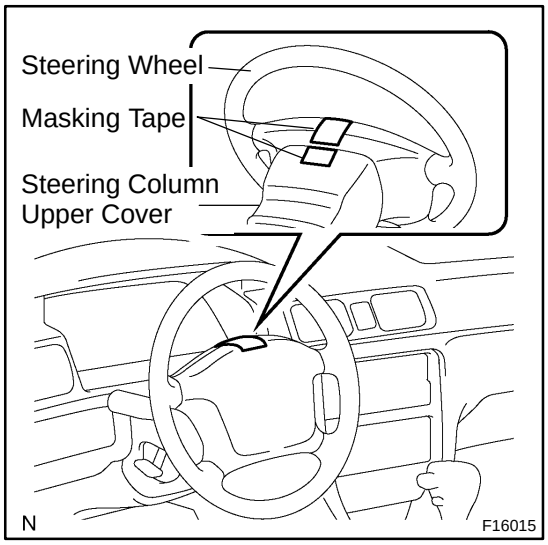

1. INSPECT STEERING WHEEL OFF CENTER

(a) Apply masking tape on the top center of the steering wheel and steering column upper cover.

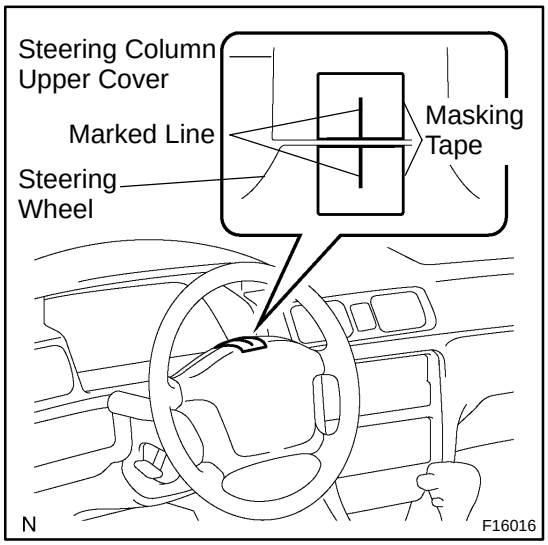

(b) Drive the vehicle in a straight line for 100 meters at a constant speed of 35 mph (56 km/h), and hold the steering wheel to maintain the course.

(c) Draw a line on the masking tape as shown in the illustration.

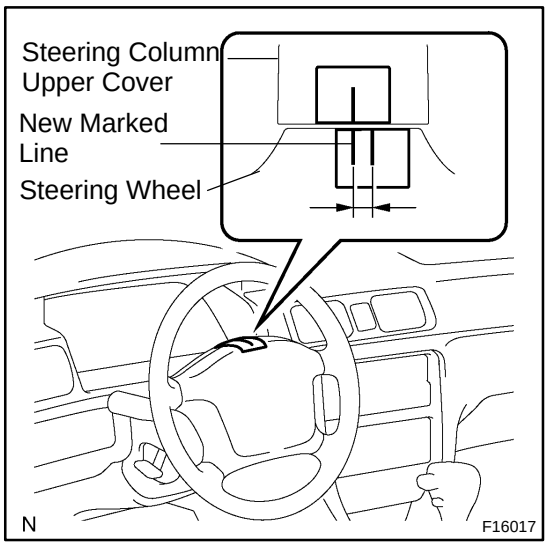

(d) Turn the steering wheel to its straight position.

HINT:

Refer to the upper surface of the steering wheel, steering spoke and SRS airbag line for the straight position.

(e) Draw a new line on the masking tape of the steering wheel as shown in the illustraion.

(f) Measure the distance between the 2 lines on the masking tape of the steering wheel.

(g) Convert the measured distance to steering angle.
Measured distance 1 mm (0.04 in.) = Steering angle approximately 1 deg.

HINT:

Make a note of the steering angle.

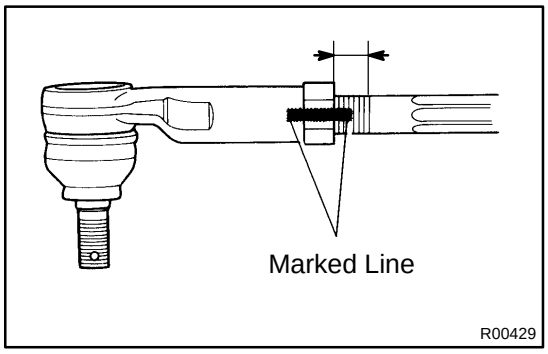

2. ADJUST STEERING ANGLE

(a) Draw a line on the RH and LH tie rod and rack ends where it can easily be seen.

(b) Using a paper gauge, measure the distance from RH and LH tie rod ends to the rack end screws.

HINT:

- Measure the RH side and LH side.
- Make a note of the measured values.

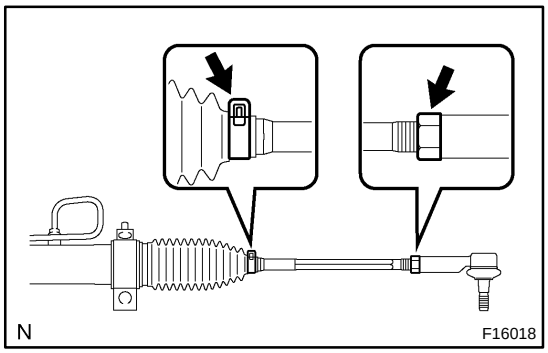

(c) Remove the RH and LH boot clips from the rack boots.

(d) Loosen the RH and LH lock nuts.

(e) Turn the RH and LH rack end by the same amount (but in different directions) according to the steering angle.
1 turn 360 deg. of rack end (1.5 mm (0.059 in.) horizontal movement) = 12 deg. of steering angle

(f) Tighten the RH and LH lock nuts.
Torque: 47 N·m (480 kgf·cm, 35 ft·lbf)

NOTICE:

Make sure that the difference in length between RH and LH tie rod ends and rack end screws are within 1.5 mm (0.059 in.).

(g) Install the RH and LH boot clips.

TROUBLESHOOTING

SR0L5-09

PROBLEM SYMPTOMS TABLE

Use the table below to help you find the cause of the problem. The numbers indicate the priority of the likely cause of the problem. Check each part in the order shown. If necessary, repair or replace these parts.

Symptom	Suspect Area	See page
Hard steering	1. Tires (Improperly inflated)	SA-3
	2. Power steering fluid level (Low)	SR-5
	3. Drive belt (Loose)	SR-3
	4. Front wheel alignment (Incorrect)	SA-5
	5. Steering system joints (Worn)	-
	6. Suspension arm ball joints (Worn)	SA-34
	7. Steering column (Binding)	-
	8. Power steering vane pump	SR-22
	9. Power steering gear	SR-45
Poor return	1. Tires (Improperly inflated)	SA-3
	2. Front wheel alignment (Incorrect)	SA-5
	3. Steering column (Binding)	-
	4. Power steering gear	SR-45
Excessive play	1. Steering system joints (Worn)	-
	2. Suspension arm ball joints (Worn)	SA-34
	3. Intermediate shaft, Sliding yoke (Worn)	-
	4. Front wheel bearing (Worn)	SA-10
	5. Power steering gear	SR-45
Abnormal noise	1. Power steering fluid level (Low)	SR-5
	2. Steering system joints (Worn)	-
	3. Power steering vane pump	SR-22
	4. Power steering gear	SR-45

TILT STEERING COLUMN

COMPONENTS

SR0VK-04

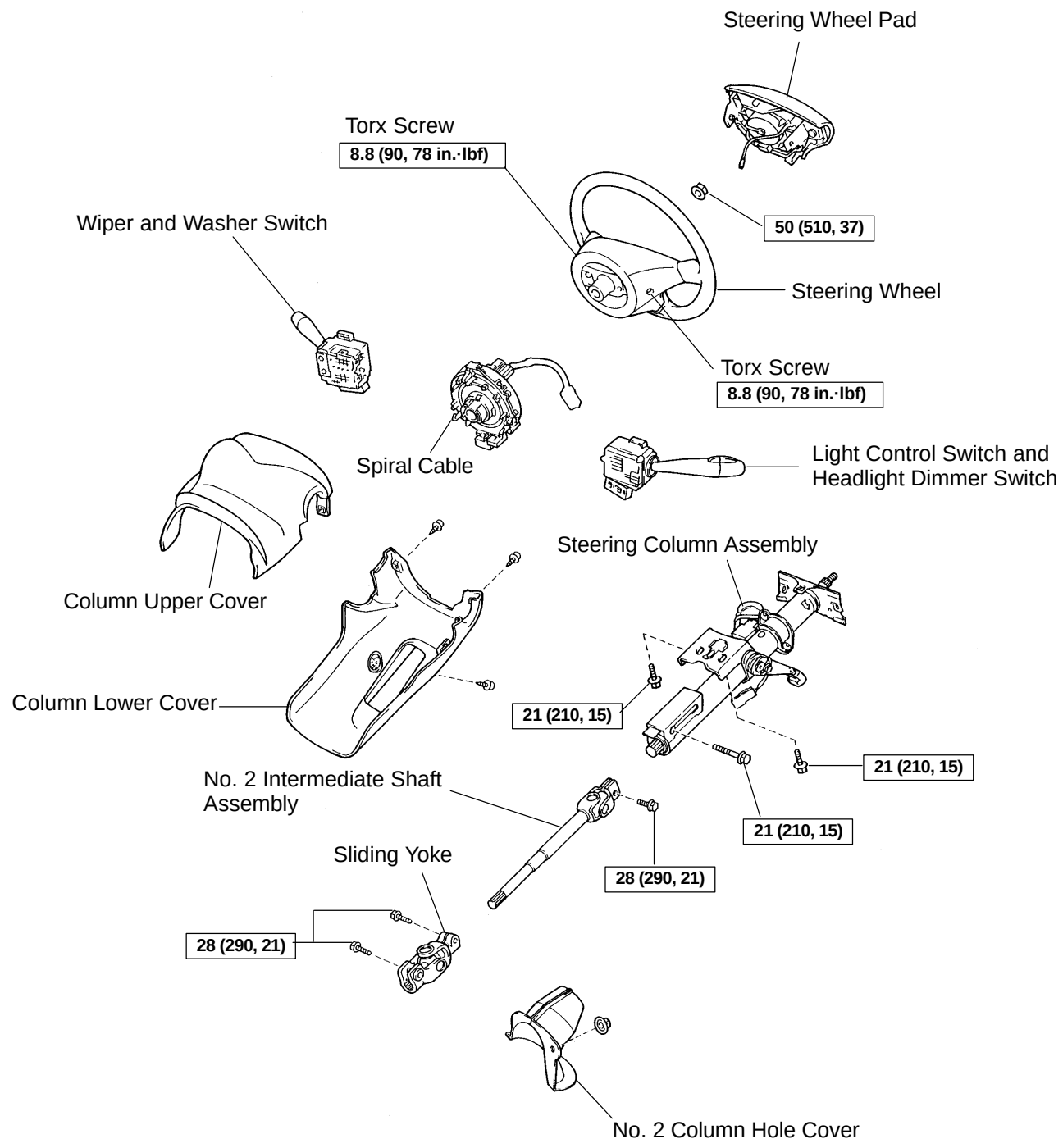

N·m (kgf·cm, ft·lbf) : Specified torque

N

F09904

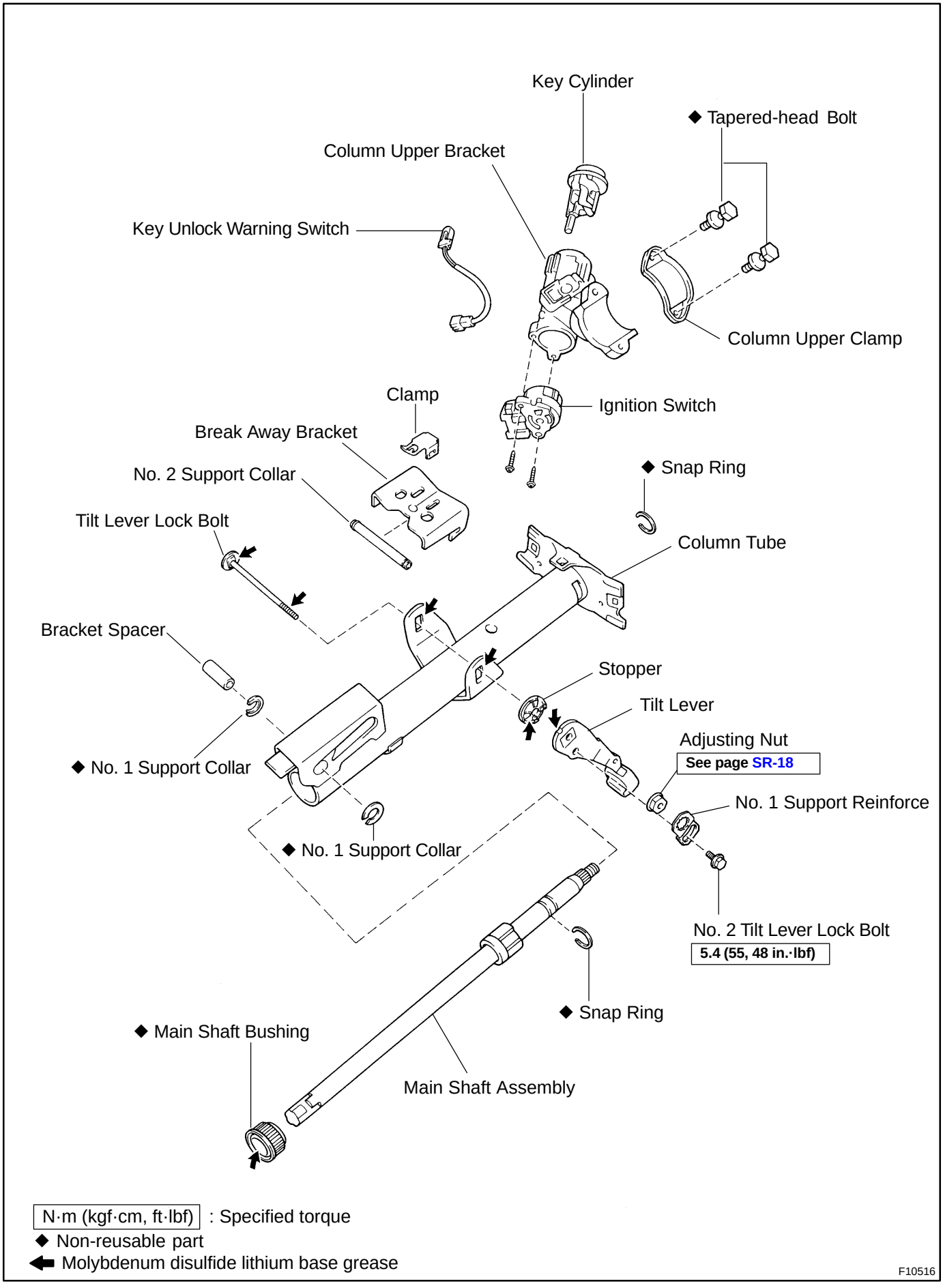
Key Cylinder
◆ Tapered-head Bolt
Column Upper Bracket
Key Unlock Warning Switch
Column Upper Clamp
Clamp
Ignition Switch
Break Away Bracket
No. 2 Support Collar
◆ Snap Ring
Tilt Lever Lock Bolt
Column Tube
Bracket Spacer
Stopper
Tilt Lever
Adjusting Nut
See page SR-18
◆ No. 1 Support Collar
No. 1 Support Reinforce
◆ No. 1 Support Collar
No. 2 Tilt Lever Lock Bolt
5.4 (55, 48 in.·lbf)
◆ Snap Ring
◆ Main Shaft Bushing
Main Shaft Assembly
N·m (kgf·cm, ft·lbf) : Specified torque
◆ Non-reusable part
Molybdenum disulfide lithium base grease
F10516

SR0ZL-01

DISASSEMBLY

NOTICE:

When using a vise, do not overtighten it.

1. REMOVE COLUMN UPPER BRACKET AND COLUMN UPPER CLAMP

(a) Using a centering punch, mark the center of the 2 tapered-head bolts.

(b) Using a 3 - 4 mm (0.12 - 0.16 in.) drill, drill into the 2 bolts.

(c) Using a screw extractor, remove the 2 bolts, column upper bracket and column upper clamp.

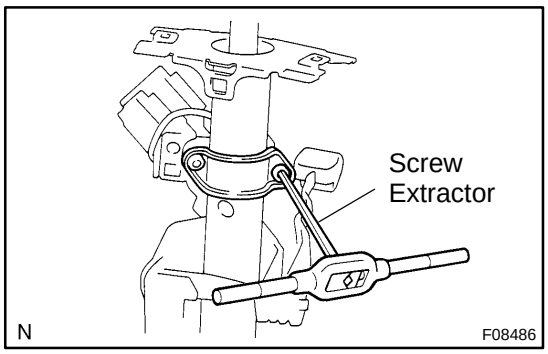

2. REMOVE BRACKET SPACER AND 2 NO. 1 SUPPORT COLLARS

(a) Using an extension bar and a hammer, tap out the bracket spacer.

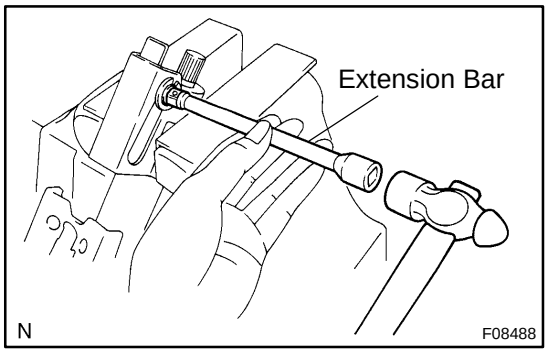

(b) Using a screwdriver, remove the 2 No. 1 support collars.

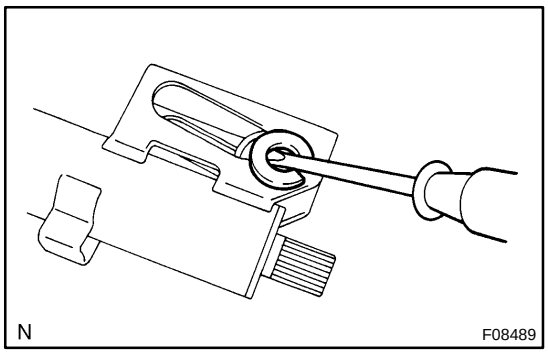

3. REMOVE TILT LEVER AND BREAK AWAY BRACKET

(a) Remove the No. 2 tilt lever lock bolt and No. 1 support reinforce.

HINT:

This bolt is left-handed one.

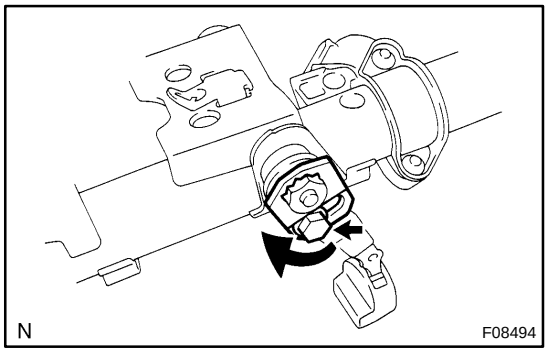

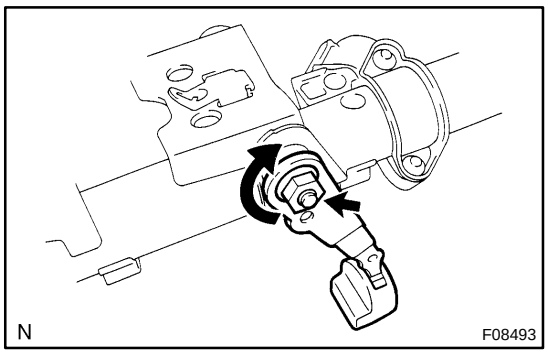

(b) Remove the adjusting nut, tilt lever, stopper, tilt lever lock bolt and break away bracket.

HINT:

This nut is left-handed one.

(c) Remove the clamp and No. 2 support collar from the break away bracket.

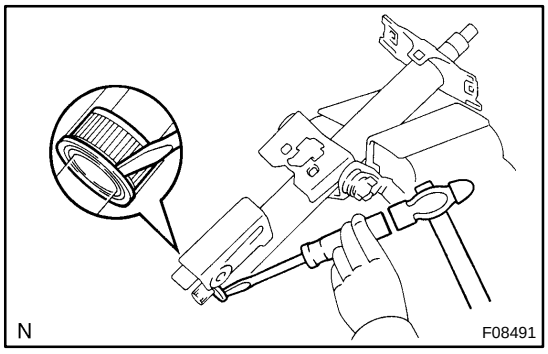

4. REMOVE MAIN SHAFT BUSHING

Using a screwdriver and hammer, tap out the main shaft bushing.

5. REMOVE MAIN SHAFT ASSEMBLY

(a) Using a snap ring expander, remove the snap ring on the upper side.

(b) Remove the main shaft assembly.

(c) Using a snap ring expander, remove the snap ring on the lower side.

SR0VN-05

INSPECTION

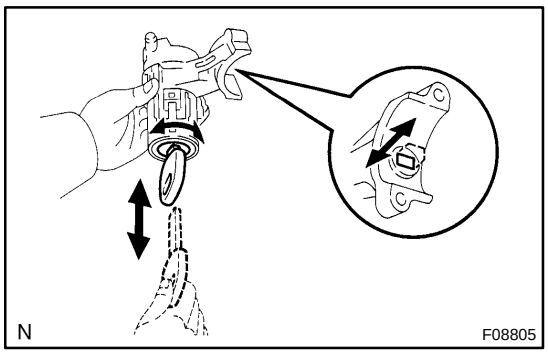

1. INSPECT STEERING LOCK OPERATION

Check that the steering lock mechanism operates properly.

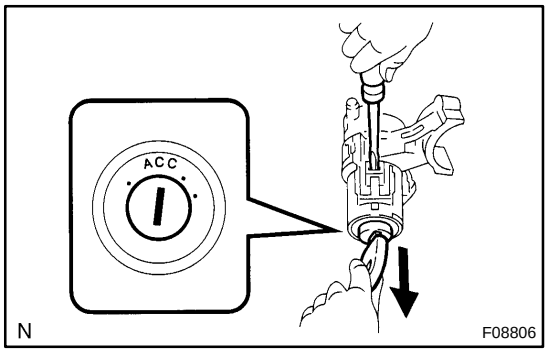

2. IF NECESSARY, REPLACE KEY CYLINDER

(a) Place the ignition key at the ACC position.

(b) Push down the stop pin with a screwdriver, and pull out the cylinder.

(c) Install a new cylinder.

HINT:

Make sure the key is at the ACC position.

3. INSPECT IGNITION SWITCH (See page BE-15)

4. IF NECESSARY, REPLACE IGNITION SWITCH

(a) Remove the 2 screws and ignition switch from the column upper bracket.

(b) Install a new ignition switch with the 2 screws.

5. INSPECT KEY UNLOCK WARNING SWITCH (See page BE-15)

6. IF NECESSARY, REPLACE KEY UNLOCK WARNING SWITCH

(a) Slide the key unlock warning switch out of the column upper bracket.

(b) Slide a new key unlock warning switch in the column upper bracket.

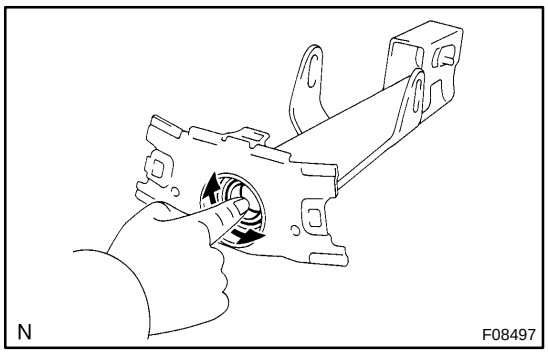

7. INSPECT BEARING

Check the bearing rotation condition and check for abnormal noise.

If the bearing is worn or damaged, replace the column tube.

SR0ZN-02

INSTALLATION

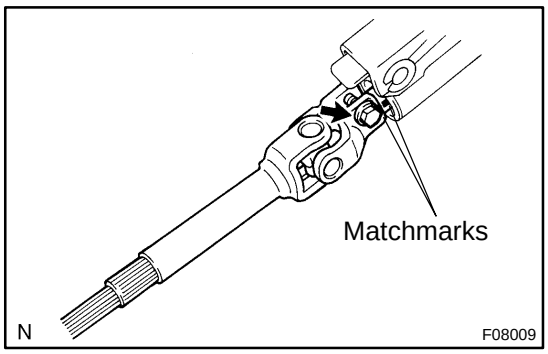

1. INSTALL NO. 2 INTERMEDIATE SHAFT ASSEMBLY

(a) Align the matchmarks on the No. 2 intermediate shaft assembly and main shaft assembly.

(b) Install the No. 2 intermediate shaft assembly with the bolt.
Torque: 28 N·m (290 kgf·cm, 21 ft·lbf)

2. INSTALL SLIDING YOKE

Temporarily install the sliding yoke to the No. 2 intermediate shaft assembly with the bolt A.

3. INSTALL STEERING COLUMN ASSEMBLY

(a) Install the steering column assembly with the lower mount bolt and 2 upper mount bolts.
Torque: 21 N·m (210 kgf·cm, 15 ft·lbf)

(b) Connect the connectors.

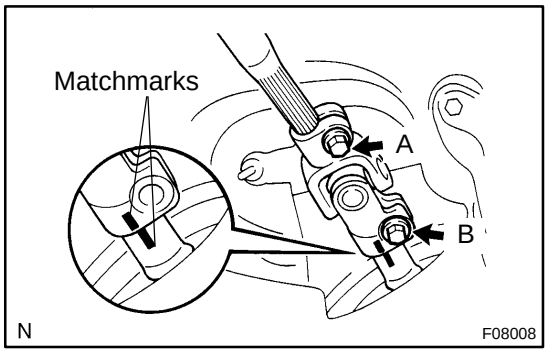

4. CONNECT SLIDING YOKE

(a) Align the matchmarks on the sliding yoke and No. 3 intermediate shaft assembly.

(b) Install the bolt B.
Torque: 28 N·m (290 kgf·cm, 21 ft·lbf)

(c) Torque the bolt A.
Torque: 28 N·m (290 kgf·cm, 21 ft·lbf)

5. INSTALL NO. 2 COLUMN HOLE COVER

Install the No. 2 column hole cover with the clip.

6. A/T:
INSTALL KEY INTERLOCK CABLE
(See page AX-24)

7. INSTALL COLUMN UPPER COVER, LIGHT CONTROL SWITCH AND HEADLIGHT DIMMER SWITCH, WIPER AND WASHER SWITCH AND SPIRAL CABLE

(a) Install the column upper cover.

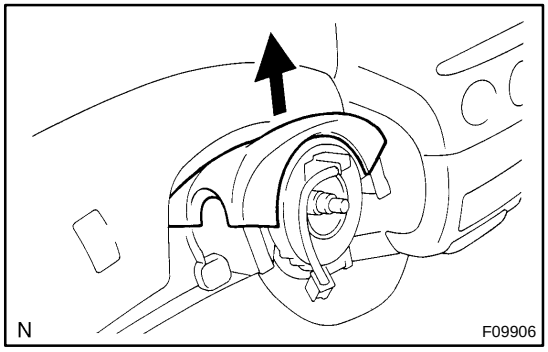

(b) Slide the column upper cover and install the spiral cable.

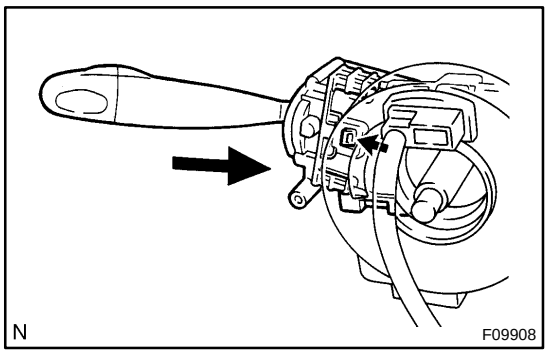

(c) Push into the light control switch and headlight dimmer switch until the claw is latched.
(d) Employ the same manner described above to the wiper and washer switch.
(e) Connect the airbag connector to the spiral cable.
(f) Connect the 3 connectors to the spiral cable, light control switch and headlight dimmer switch and wiper and washer switch.

8. INSTALL COLUMN LOWER COVER

Install the column lower cover with the 3 screws.

9. CENTER SPIRAL CABLE

(a) Check that the front wheels are facing straight ahead.
(b) Turn the cable counterclockwise by hand until it becomes harder to turn.
(c) Then rotate the cable clockwise about 2.5 turns to align the marks.

HINT:

The cable will rotate about 2.5 turns to either left or right of the center.

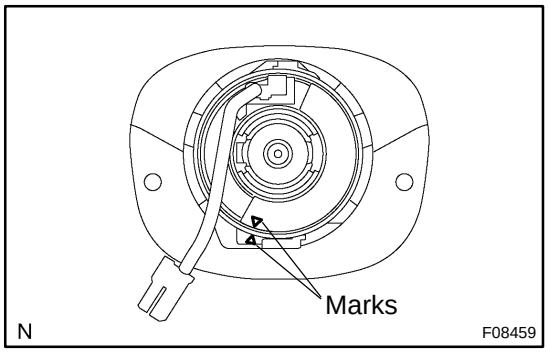

10. INSTALL STEERING WHEEL

(a) Align the matchmarks on the steering wheel and main shaft assembly.
(b) Install the steering wheel set nut.
Torque: 50 N·m (510 kgf·cm, 37 ft·lbf)

11. INSTALL STEERING WHEEL PAD

NOTICE:

- **Never use airbag parts from another vehicle. When replacing parts, replace with new ones.**
- **Make sure the wheel pad is installed with the specified torque.**
- **If the wheel pad has been dropped, or there are cracks, dents or other defects in the case or connector, replace the wheel pad with a new one.**
- **When installing the wheel pad, take care that the wirings do not interfere with other parts and that they are not pinched between other parts.**

(a) Connect the connector.
(b) Connect the airbag connector.

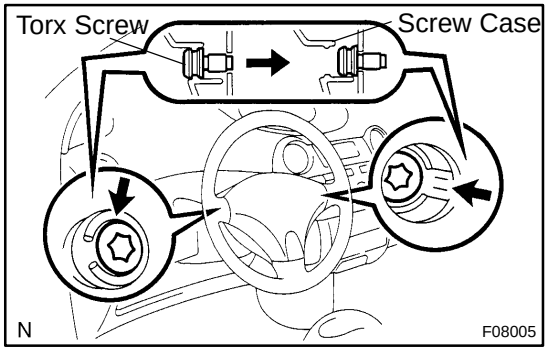

(c) Install the steering wheel pad after confirming that the circumference groove of the torx screws is caught on the screw case.
(d) Using a torx socket wrench, torque the 2 screws.
Torque: 8.8 N·m (90 kgf·cm, 78 in.·lbf)

12. CHECK STEERING WHEEL CENTER POINT

SR0ZM-01

REASSEMBLY

NOTICE:

When using a vise, do not overtighten it.

1. COAT PARTS INDICATED BY ARROWS WITH MOLYBDENUM DISULFIDE LITHIUM BASE GREASE
(See page SR-1 1)

2. INSTALL MAIN SHAFT ASSEMBLY

(a) Using a snap ring expander, install a new snap ring on the lower side.

(b) Install the main shaft assembly.

(c) Using a snap ring expander, install a new snap ring on the upper side.

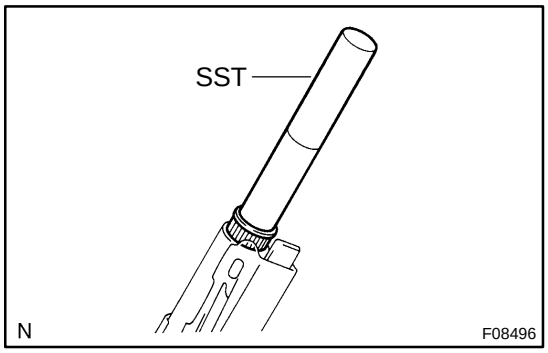

3. INSTALL MAIN SHAFT BUSHING

(a) Coat a new bushing with molybdenum disulfide lithium base grease.

(b) Using SST and a hammer, tap in the main shaft bushing.
SST 09612-2201 1

4. INSTALL BREAK AWAY BRACKET AND TILT LEVER

(a) Install the clamp and No. 2 support collar to the break away bracket.

(b) Install the break away bracket, tilt lever lock bolt, stopper and tilt lever.

HINT:

Align the holes in the column tube with the projections of the tilt lever lock bolt and stopper.

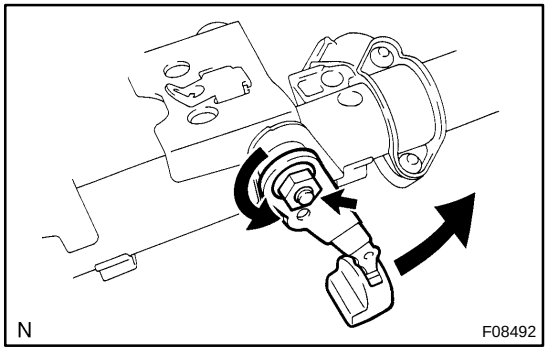

(c) Install the adjusting nut by rotating it counterclockwise in the specified torque so that the locking load (load applied to when a knob is operated) of the tilt lever will be 43 - 91 N (4.4 - 9.3 kgf, 9.7 - 20.5 lbf).

Torque: 9 N·m - 14 N·m (90 kgf·cm - 145 kgf·cm, 80 in.·lbf - 10 ft·lbf)

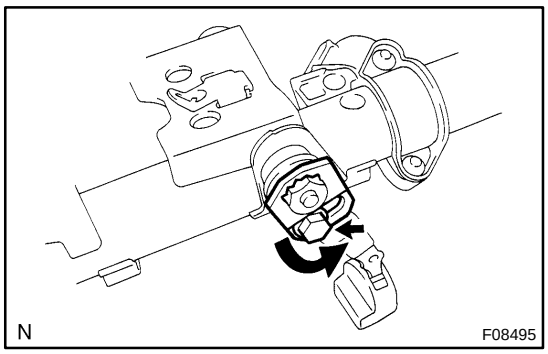

(d) Install the No. 1 support reinforce with the No. 2 tilt lever lock bolt by turning it counterclockwise.
Torque: 5.4 N·m (55 kgf·cm, 48 in.·lbf)

HINT:
Align the No. 1 support reinforce with the nut to eliminate looseness by turning the No. 1 support reinforce counterclockwise a little, then torque the No. 2 tilt lever lock bolt.

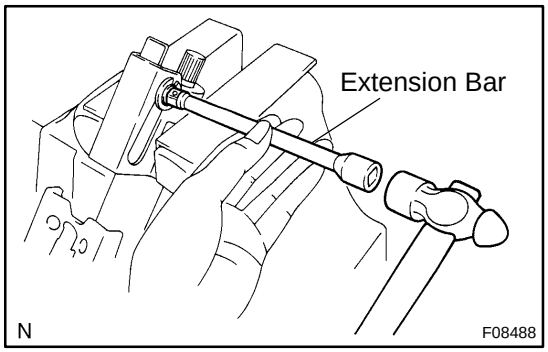

5. INSTALL 2 NO. 1 SUPPORT COLLARS AND BRACKET SPACER

(a) Install 2 new No. 1 support collars.
(b) Using an extension bar and a hammer, drive in the bracket spacer.

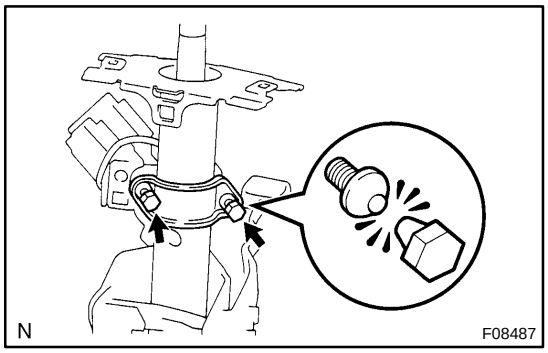

6. INSTALL COLUMN UPPER BRACKET AND COLUMN UPPER CLAMP

(a) Install the column upper bracket and column upper clamp with 2 new tapered-head bolts.
(b) Tighten the 2 tapered-head bolts until the bolt heads break off.

SR0ZK-02

REMOVAL

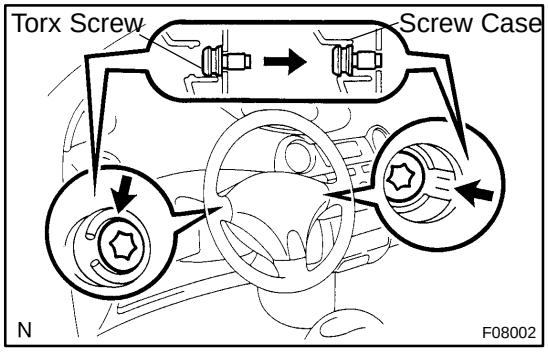

1. REMOVE STEERING WHEEL PAD

NOTICE:

If the airbag connector is disconnected with the ignition switch at ON, DTCs will be recorded.

(a) Place the front wheels facing straight ahead.

(b) Using a torx socket wrench, loosen the 2 torx screws until the groove along the screw circumference catches on the screw case.

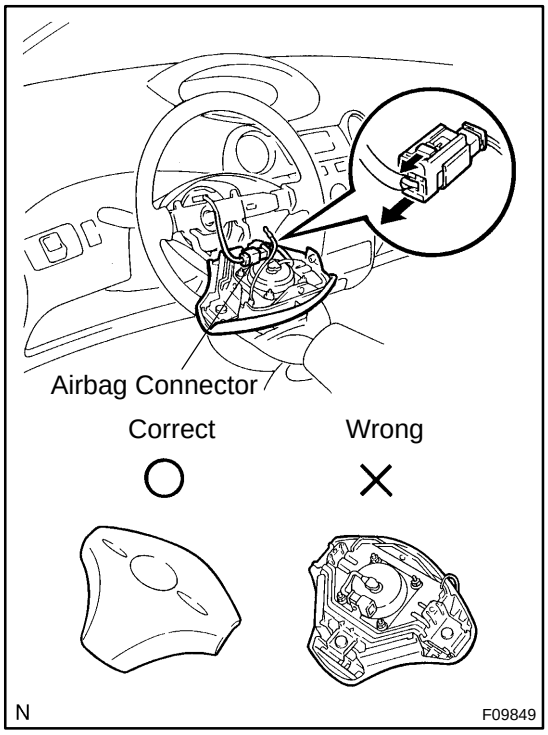

(c) Pull out the wheel pad from the steering wheel and disconnect the airbag connector.

(d) Disconnect the connector.

CAUTION:

- **When storing the wheel pad, keep the upper surface of the pad facing upward.**
- **Never disassemble the wheel pad.**

NOTICE:

When removing the wheel pad, take care not to pull the airbag wire harness.

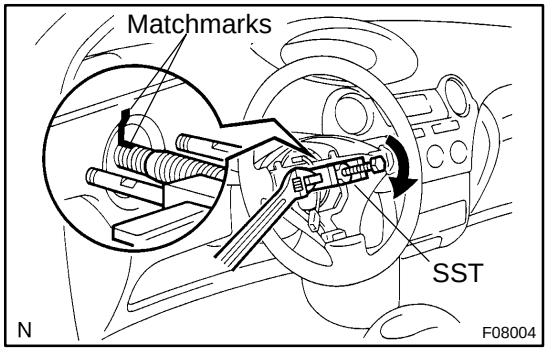

2. REMOVE STEERING WHEEL

(a) Remove the steering wheel set nut.

(b) Place matchmarks on the steering wheel and main shaft assembly.

(c) Using SST, remove the steering wheel.

SST 09950- 50013 (09951- 05010, 09952- 05010, 09953-05020, 09954-05021)

3. REMOVE COLUMN LOWER COVER

Remove the 3 screws and column lower cover.

4. REMOVE SPIRAL CABLE, LIGHT CONTROL SWITCH AND HEADLIGHT DIMMER SWITCH, WIPER AND WASHER SWITCH AND COLUMN UPPER COVER

(a) Disconnect the 3 connectors from the spiral cable, light control switch and headlight dimmer switch and wiper and washer switch.

(b) Disconnect the airbag connector from the spiral cable.

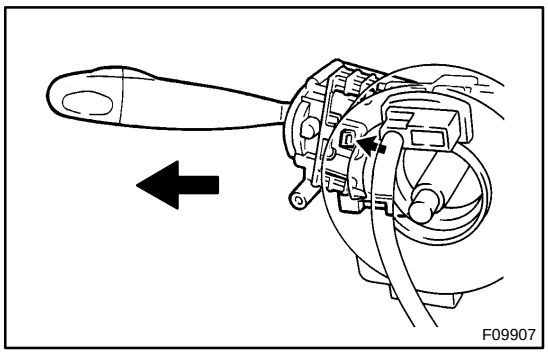

(c) Push the claw and pull out the light control switch and headlight dimmer switch.
(d) Employ the same manner described above to the wiper and washer switch.

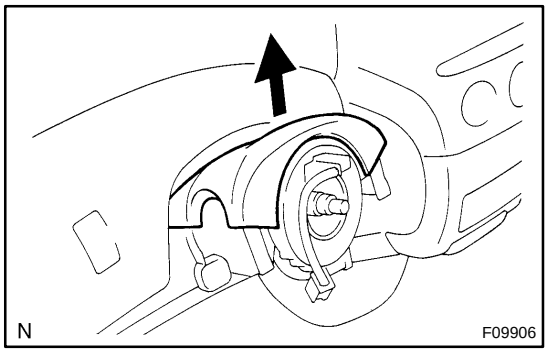

(e) Slide the column upper cover and remove the spiral cable.

NOTICE:

Do not disassemble the spiral cable or apply oil to it.

(f) Remove the column upper cover.

5. A/T:

REMOVE KEY INTERLOCK CABLE

(See page AX-18)

6. REMOVE NO. 2 COLUMN HOLE COVER

Remove the clip and No. 2 column hole cover.

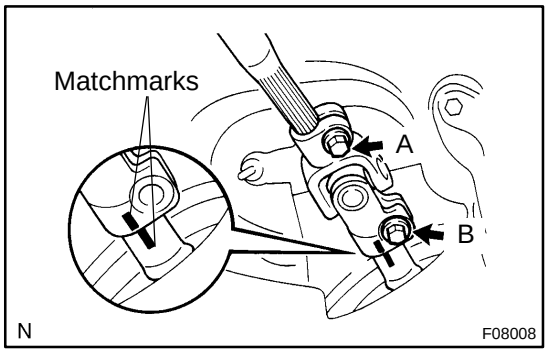

7. DISCONNECT SLIDING YOKE

(a) Place matchmarks on the sliding yoke and No. 3 intermediate shaft assembly.
(b) Loosen the bolt A and remove the bolt B, then disconnect the sliding yoke.

8. REMOVE STEERING COLUMN ASSEMBLY

(a) Disconnect the connectors.
(b) Remove the lower mount bolt, 2 upper mount bolts and steering column assembly.

9. REMOVE SLIDING YOKE

Remove the bolt A and sliding yoke.

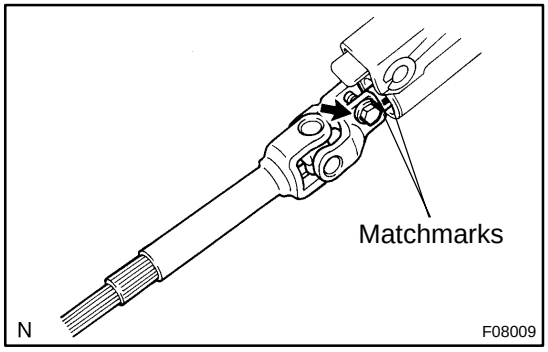

10. REMOVE NO. 2 INTERMEDIATE SHAFT ASSEMBLY

(a) Place matchmarks on the No. 2 intermediate shaft assembly and main shaft assembly.
(b) Remove the bolt and No. 2 intermediate shaft assembly.

AIR CONDITIONING

SERVICE DATA

SS072-05

Refrigerant charge volume	460 ± 30 g (16.23 ± 1.06 oz.)
Drive belt tension	-
New belt	490 - 690 N (50 - 70 kgf)
Used belt	340 - 440 N (35 - 45 kgf)
Idle-up speed (M/T)	-
Magnetic clutch not engaged	600 ± 50 rpm
Magnetic clutch engaged (Condenser fan speed at low)	700 ± 50 rpm
Magnetic clutch engaged (Condenser fan speed at high)	875 ± 50 rpm
Idle-up speed (A/T)	-
Magnetic clutch not engaged	700 ± 50 rpm
Magnetic clutch engaged (Condenser fan speed at low)	750 ± 50 rpm
Magnetic clutch engaged (Condenser fan speed at high)	875 ± 50 rpm
Magnetic clutch clearance	0.5 ± 0.15 mm (0.020 ± 0.0059 in.)

SS073-05

TORQUE SPECIFICATION

Part tightened	N·m	kgf·cm	ft·lbf
Compressor x Engine	25	250	18
Compressor x Discharge hose	10	100	7
Compressor x Suction hose	10	100	7
Expansion valve x Evaporator	3.4	35	30 in.·lbf
Condenser x Liquid tube	5.4	55	48 in.·lbf
Condenser x Discharge hose	5.4	55	48 in.·lbf
Pressure switch x Liquied tube	10	100	7
Pressure plate x Compressor	13.2	135	9
Water temperature switch x Engine	34	350	25
Front passenger airbag x Reinforcement	20	205	15

AUTOMATIC TRANSAXLE

SS13Y-07

SERVICE DATA

Line pressure (Wheel locked)		
	Engine idling	
	D position	372 - 407 kPa (3.8 - 4.2 kgf/cm^2, 54 - 60 psi)
	R position	541 - 636 kPa (5.5 - 6.5 kgf/cm^2, 78 - 92 psi)
	at stall (Throttle valve fully opened)	
	D position	1,107 - 1,225 kPa (11.3 - 12.5 kgf/cm^2, 161 - 178 psi)
	R position	1,695 - 1,813 kPa (17.3 - 18.5 kgf/cm^2, 246 - 263 psi)
Engine stall revolution	D and R positions	2,330 ± 200 rpm
Time lag	N → D position	Less than 1.2 seconds
	N → R position	Less than 1.5 seconds
Engine idle speed (A/C OFF)	N position	600 ± 50 rpm
Drive plate runout	Max.	0.20 mm (0.0079 in.)
Torque converter clutch runout	Max.	0.30 mm (0.0118 in.)
Torque converter clutch installation distance		More than 9.3 mm (0.366 in.)
Differential oil seal drive in depth	RH	2.0 ± 0.5 mm (0.079 ± 0.020 in.)
	LH	5.9 ± 0.5 mm (0.232 ± 0.020 in.)
Shift schedule		
D position		
(Throttle valve fully opened)	1 → 2	52 - 58 km/h (32 - 36 mph)
	2 → 3	97 - 108 km/h (60 - 67 mph)
	3 → O/D	169 - 182 km/h (105 - 113 mph)
	O/D → 3	149 - 162 km/h (93 - 101 mph)
	3 → 2	91 - 101 km/h (57 - 63 mph)
	2 → 1	43 - 48 km/h (27 - 30 mph)
(Throttle valve fully closed)	3 → O/D	41 - 47 km/h (25 - 29 mph)
	O/D → 3	31 - 36 km/h (19 - 22 mph)
2 position		
(Throttle valve fully opened)	1 → 2	52 - 58 km/h (32 - 36 mph)
	3 → 2	91 - 101 km/h (57 - 63 mph)
	2 → 1	43 - 48 km/h (27 - 30 mph)
L position		
(Throttle valve fully opened)	3 → 2	91 - 101 km/h (57 - 63 mph)
	2 → 1	45 - 51 km/h (28 - 32 mph)
Lock-up point	Throttle valve opening 5 %	
3rd gear	Lock-up ON	97 - 108 km/h (60 - 67 mph)
	Lock-up OFF	91 - 101 km/h (57 - 63 mph)
O/D gear	Lock-up ON	56 - 62 km/h (35 - 39 mph)
	Lock-up OFF	54 - 59 km/h (34 - 37 mph)

SS13Z-08

TORQUE SPECIFICATION

Part tightened		N·m	kgf·cm	ft·lbf
Vehicle speed sensor x Transaxle		7.0	71	5
Direct clutch speed sensor x Transaxle		5.4	55	48 in.·lbf
Transaxle control cable x Control shaft		15	150	11
Control shaft x Park/neutral position switch		13	130	9
Park/neutral position switch x Transaxle	Bolt Nut	5.4 6.9	55 70	48 in.·lbf 61 n.·lbf
Solenoid valve x Valve body	12 mm bolt: 45 mm bolt:	11 11	110 110	8 8
Valve body x Transaxle		11	110	8
ATF temperature sensor x Valve body		11	110	8
Oil strainer x Valve body		11	110	8
Oil pan x Transaxle		7.8	80	69 in.·lbf
Drain plug x Oil pan		49	500	36
Floor shift assembly x Body		12	120	9
Floor shift assembly x Transaxle control cable		12	120	9
Air cleaner bracket x Transaxle		19	195	14
Starter x Transaxle		39	400	29
Transaxle x Engine		29.5	300	22
Engine hanger x Engine		40	400	29
Steering wheel x column shaft		34	350	25
Tie rod end x Axle carrier		49	500	36
Torque converter clutch x Drive plate		27	275	20
Lower suspension arm x Axle carrier		98	1,000	72
Drive shaft lock nut		216	2,200	159
Hood x Hood hinge		11	115	8
LH engine mounting x Transaxle		49	500	36
Drive plate x Crank shaft		88	900	65
PS pipe clamp x front suspension member		7.8	80	69 in.·lbf
Rear engine mounting bracket x Front suspension member		80	810	59
Front suspension member x Body (MS: See page SR-35) (PS: See page SR-48)	Bolt A: Bolt B:	116 70	1,185 715	86 52
Wiper arm x Wiper link assembly		21	214	15
Wiper arm assembly x Body		5.5	55	49 in.·lbf
Outer front cowl top panel x Body		5.0	50	43 in.·lbf
No.3 intermediate shaft assembly x Steering gear assembly		47	480	35
PS only: Pressure feed and return tubes x Steering gear assembly		37 (44)	375 (450)	27 (33)

( ): For use without SST

BODY ELECTRICAL

SS02V-03

SERVICE DATA

SPEEDOMETER (ON-VEHICLE)	
USA:	
Standard indication (mph)	Allowable range (mph)
20	18 - 24
40	38 - 44
60	56 - 66
80	78 - 88
100	98 - 110
CANADA:	
Standard indication (km/h)	Allowable range (km/h)
20	17 - 24
40	38 - 46
60	57.5 - 67
80	77 - 88
100	96 - 109
120	115 - 130
140	134 - 151.5
160	153 - 173
FUEL SENDER GAUGE	
Float position mm (in.)	Resistance (Ω)
F: Approx. 83.8 (3.30) ± 3 (0.12)	Approx. 4.0 ± 1
1/2: Approx. 18.9 (0.74) ± 3 (0.12)	Approx. 55.0 ± 3
E: Approx. 55.2 (2.17) ± 3 (0.12)	Approx. 107.0 ± 1
ENGINE COOLANT TEMPERATURE SENDER GAUGE	
Temperature ˚C (˚F)	Resistance (Ω)
50 (122.0)	160 - 240
120 (248.0)	17.1 - 21.2

BODY

TORQUE SPECIFICATION

SS140-05

Part tightened	N·m	kgf·cm	ft·lbf
FRONT BUMPER	-	-	-
Reinforcement x Front bumper arm	20	205	15
REAR BUMPER	-	-	-
Reinforcement x Rear bumper arm	13	130	9
HOOD	-	-	-
Hood x Hood hinge	11	115	8
Hood lock x Body	7.8	80	69 in.·lbf
FRONT DOOR	-	-	-
Door hinge x Body	43	440	32
Door hinge x Door panel	43	440	32
Door lock striker x Body	23	230	17
Door check x Body	30	310	22
Door check x Door panel	5.4	55	48 in.·lbf
Outside handle x Door panel	5.4	55	48 in.·lbf
Door lock x Door panel	4.9	50	43 in.·lbf
Window regulator x Door panel	8.3	85	74 in.·lbf
Rear view mirror x Door panel	7.8	80	69 in.·lbf
REAR DOOR	-	-	-
Door hinge x Body	25	260	19
Door hinge x Door panel	25	260	19
Door lock striker x Body	23	230	17
Door check x Body	30	310	22
Door check x Door panel	5.4	55	48 in.·lbf
Outside handle x Door panel	5.4	55	48 in.·lbf
Door lock x Door panel	4.9	50	43 in.·lbf
Window regulator x Door panel	8.3	85	74 in.·lbf
LUGGAGE COMPARTMENT DOOR AND HINGE	-	-	-
Door lock striker x Body	4.9	50	43 in.·lbf
Luggage compartment door x Luggage door hinge	8.3	85	74 in.·lbf
Luggage compartment door lock x Luggage compartment door	4.9	50	43 in.·lbf
FRONT WIPER AND WASHER	-	-	-
Outer front cowl top panel x Body	7.8	80	69 in.·lbf
Wiper motor x Wiper link	5.4	55	48 in.·lbf
Wiper link x Body	5.4	55	48 in.·lbf
Wiper arm x Wiper link	20	205	15
INSTRUMENT PANEL	-	-	-
Steering wheel set nut	50	510	37
Passenger airbag assembly x Reinforcement	18	185	13
FRONT SEAT	-	-	-
Seat adjuster x Body	37	375	27
Seat adjuster x Seatback frame	43	440	32
Seat adjuster x Seat inner belt	41	420	30

REAR SEAT (Bench type)		-	-	-
Seatback assembly x Body		7.9	81	70 in.·lbf
REAR SEAT (Split type)		-	-	-
Seat cushion center bracket x Body		41	420	30
Center hinge x Body		41	420	30
Rear seat side hinge x Body		41	420	30
Seatback assembly x Center hinge		37	380	27
SEAT BELT		-	-	-
Front seat outer belt retractor x Body	Upper:	4.7	48	42 in.·lbf
Front seat outer belt retractor x Body	Lower:	41	420	30
Front seat outer belt shoulder Anchor x Body		41	420	30
Front seat outer belt floor anchor x Body		41	420	30
Rear seat outer belt floor anchor x Body		41	420	30
Rear seat outer belt retractor x Body		41	420	30
Rear seat inner belt x Body		41	420	30
Rear seat center belt x Body		41	420	30
Rear seat center belt retractor x Body		41	420	30

BRAKE

SS0M2-09

SERVICE DATA

Brake pedal height (from dash panel)		124.3 - 134.3 mm (4.89 - 5.287 in.)
Brake pedal free play		1 - 3 mm (0.04 - 0.12 in.)
Brake pedal reserve distance at 490 N (50 kgf, 110.2 lbf)		More than 48 mm (1.89 in.)
Parking brake lever travel at 196 N (20 kgf, 44.1 lbf)		6 - 9 clicks
Front brake pad thickness	STD	11.0 mm (0.433 in.)
Front brake pad thickness	Minimum	1.0 mm (0.039 in.)
Front brake disc thickness	STD	18.0 mm (0.709 in.)
Front brake disc thickness	Minimum	16.0 mm (0.630 in.)
Front brake disc runout	Maximum	0.05 mm (0.0020 in.)
Rear brake drum inside diameter	STD	180.0 mm (7.087 in.)
Rear brake drum inside diameter	Maximum	181.0 mm (7.126 in.)
Rear brake shoe lining thickness	STD	4.0 mm (0.157 in.)
Rear brake shoe lining thickness	Minimum	1.0 mm (0.039 in.)
Rear brake drum to shoe clearance		0.6 mm (0.024 in.)

SS0M3-08

TORQUE SPECIFICATION

Part tightened	N·m	kgf·cm	ft·lbf
Bleeder plug	8.3	85	73 in.·lbf
Parking brake equalizer lock nut	5.4	55	48 in.·lbf
Master cylinder x Brake booster	13	130	9
Brake line union nut	15	155	11
Brake booster clevis lock nut	26	260	19
Brake booster installation nut	13	130	9
Brake pedal assembly x Reinforcement	19.5	200	14
Brake pedal x Pedal Bracket	37	375	27
Front brake caliper installation bolt	34	350	25
Front brake torque plate x Steering knuckle	88	900	65
Front brake caliper x Flexible hose	30	310	22
Rear drum brake wheel cylinder x Backing plate	10	100	7
ABS actuator assembly x Body	19	195	14
ABS actuator assembly x Clamp	19	195	14
ABS actuator x Actuator bracket	4.7	48	42 in.·lbf
Front speed sensor x Steering knuckle	8.0	82	71 in.·lbf
Front speed sensor wire harness clamp x Shock absorber	29	300	22
Front speed sensor wire harness clamp x Body	8.0	82	71 in.·lbf
Rear axle hub installation bolt	52	526	38

CHARGING

SS0YW-06

SERVICE DATA

Battery	Specific gravity	at 20˚C (68˚F)	1.25 - 1.29
	Voltage	at 20˚C (68˚F)	12.5 - 12.9 V
Drive belt	Tension (Reference)	New belt	540 - 640 N (55 - 65 kgf)
		Used belt	250 - 390 N (35 - 40 kgf)
Alternator	Rated output		12 V 70 A, 12 V 90 A
	Rotor coil resistance	at 20˚C (68˚F)	2.7 - 3.1 Ω
	Slip ring diameter	STD	14.2 - 14.4 mm (0.559 - 0.567 in.)
		Minimum	12.8 mm (0.504 in.)
	Brush exposed length	STD	10.5 mm (0.413 in.)
		Minimum	1.5 mm (0.059 in.)
IC regulator	Regulating voltage	at 25 ˚C (77 ˚F)	13.5 - 15.1 V

SS0YX-06

TORQUE SPECIFICATION

Part tightened		N·m	kgf·cm	ft·lbf
Bearing retainer x Drive end frame		3.0	31	27 in.·lbf
Rectifier end frame without wire clip x Drive end frame		4.5	46	40 in.·lbf
Rectifier end frame with wire clip x Drive end frame		5.4	55	48 in.·lbf
Alternator pulley x Rotor		111	1,125	81
Rectifier holder x Lead wire on rectifier end frame		2.9	30	26 in.·lbf
IC regulator x Rectifier end frame		2.0	20	17 in.·lbf
IC regulator x Rectifier holder		2.0	20	17 in.·lbf
Brush holder x Rectifier holder		2.0	20	17 in.·lbf
Brush holder x IC regulator		2.0	20	17 in.·lbf
Rear end cover x Rectifier holder	Nut	4.4	45	39 in.·lbf
	Bolt	3.9	39	35 in.·lbf
Terminal insulator x Rectifier holder		4.1	42	36 in.·lbf

CLUTCH

SS09Q-04

SERVICE DATA

Pedal height from dash panel		134.3 - 144.3 mm (5.287 - 5.681 in.)
Pedal free play		5.0 - 15.0 mm (0.197 - 0.591 in.)
Push rod play at pedal top		1.0 - 5.0 mm (0.039 - 0.197 in.)
Clutch release point from pedal full stroke end position		25 mm (0.98 in.) or more
Slotted spring pin protrusion		1.5 - 3.5 mm (0.059 - 0.138 in.)
Disc rivet head depth	Min.	0.3 mm (0.012 in.)
Disc runout	Max.	0.8 mm (0.031 in.)
Flywheel runout	Max.	0.1 mm (0.004 in.)
Diaphragm spring finger wear	Max. depth	0.5 mm (0.020 in.)
Diaphragm spring finger wear	Max. width	6.0 mm (0.236 in.)
Diaphragm spring tip non-alignment	Max.	0.5 mm (0.020 in.)

SS09R-03

TORQUE SPECIFICATION

Part tightened		N·m	kgf·cm	ft·lbf
Master cylinder installation nut		12	120	9
Clutch line		15	155	11
Release cylinder installation bolt		12	120	9
Union bolt		24.5	250	18
Bleeder plug		8.4	85	74 in.·lbf
Flywheel set bolt	1st	49	500	36
	2nd	Turn 90°		
Release fork support		37	375	27
Clutch cover x Flywheel		19	195	14

COOLING

SERVICE DATA

SS176-01

Thermostat	Valve opening temperature at 90˚C (199˚F)		80.0 - 84.0˚C (176 - 183˚F) 8.5 mm (0.345 in.) or more
Radiator cap	Relief valve opening pressure	STD Minimum	93 - 123 kPa (0.95 - 1.25 kgf/cm^2, 13.5 - 17.8 psi) 78 kPa (0.8kgf/cm^2, 11.3 psi)
Electric cooling fan	Amperage	STD	7.8 - 11.8 A

SS177-01

TORQUE SPECIFICATION

Part tightened		N·m	kgf·cm	ft·lbf
Drain plug		13	130	9
Water pump x Timing chain cover		11	110	8
Pump pulley x Water pump		15	150	11
Water inlet x Cylinder block		9.0	90	80 in.·lbf
A/T oil cooler x Lower tank		8.34	85	74 in.·lbf
Water filer x Radiator upper tank		7.5	76	66 in.·lbf
Electric cooling fan assembly x Radiator		7.5	76	66 in.·lbf
Fan motor x Fan shroud	w/ A/C	2.65	27	23 in.·lbf
	w/o A/C	3.98	41	35 in.·lbf
Fan x Fan motor		6.4	66	57 in.·lbf

EMISSION CONTROL

SS17E-01

TORQUE SPECIFICATION

Part tightened	N·m	kgf·cm	ft·lbf
PCV valve x Cylinder head cover	27	275	20

ENGINE MECHANICAL

SERVICE DATA

SS174-01

Compression pressure		at 250 rpm STD	1,471 kPa (15.0 kgf/cm^2, 213 psi)
		Minimum	1,079 kPa (11.0 kgf/cm^2, 156 psi)
		Difference between each cylinder	98 kPa (1.0 kgf/cm^2, 14 psi)
Valve clearance		at cold Intake	0.15 - 0.25 mm (0.006 - 0.010 in.)
		Exhaust	0.25 - 0.35 mm (0.010 - 0.014 in.)
	Valve lifter for repair part	No. 06	5.060 mm (0.1992 in.)
		No. 08	5.080 mm (0.2000 in.)
		No. 10	5.100 mm (0.2008 in.)
		No. 12	5.120 mm (0.2016 in.)
		No. 14	5.140 mm (0.2024 in.)
		No. 16	5.160 mm (0.2031 in.)
		No. 18	5.180 mm (0.2039 in.)
		No. 20	5.200 mm (0.2047 in.)
		No. 22	5.220 mm (0.2055 in.)
		No. 24	5.240 mm (0.2063 in.)
		No. 26	5.260 mm (0.2071 in.)
		No. 28	5.280 mm (0.2079 in.)
		No. 30	5.300 mm (0.2087 in.)
		No. 32	5.320 mm (0.2094 in.)
		No. 34	5.340 mm (0.2102 in.)
		No. 36	5.360 mm (0.2110 in.)
		No. 38	5.380 mm (0.2118 in.)
		No. 40	5.400 mm (0.2126 in.)
		No. 42	5.420 mm (0.2134 in.)
		No. 44	5.440 mm (0.2142 in.)
		No. 46	5.460 mm (0.2150 in.)
		No. 48	5.480 mm (0.2157 in.)
		No. 50	5.500 mm (0.2165 in.)
		No. 52	5.520 mm (0.2173 in.)
		No. 54	5.540 mm (0.2181 in.)
		No, 56	5.560 mm (0.2189 in.)
		No. 58	5.580 mm (0.2197 in.)
		No. 60	5.600 mm (0.2205 in.)
		No. 62	5.620 mm (0.2213 in.)
		No. 64	5.640 mm (0.2220 in.)
		No. 66	5.660 mm (0.2228 in.)
		No. 68	5.680 mm (0.2236 in.)
		No. 70	5.700 mm (0.2244 in.)
		No. 72	5.720 mm (0.2252 in.)
		No. 74	5.740 mm (0.2260 in.)
Ignition timing			8 - 12˚ BTDC @ idle
Idle speed		w/ Cooling fan off	A/T 700 ± 50 rpm M/T 650 ± 50 rpm
Chain and timing sprocket	Chain length at 16 links	Maximum	123.2 mm (4.850 in.)
	Camshaft timing sprocket wear (w/ chain)	Minimum	96.2 mm (3.787 in.)
	Crankshaft timing sprocket wear (w/ chain)	Minimum	50.5 mm (1.988 in.)
Chain tensioner slipper and vibration damper	Wear	Maximum	1.0 mm (0.039 in.)

Cylinder head	Warpage	Maximum	0.05 mm (0.0020 in.)
	Valve seat		
	Refacing angle		20˚, 45˚, 75˚
	Contacting angle		45˚
	Contacting width		1.0 - 1.4 mm (0.039 - 0.055 in.)
	Valve guide bushing bore diameter	STD	9.685 - 9.706 mm (0.38130 - 0.38213 in.)
		O/S 0.05	9.735 - 9.756 mm (0.38327 - 0.38493 in.)
Valve guide bushing	Inside diameter		5.010 - 5.030 mm (0.19724 - 0.19803 in.)
	Protrusion height		9.0 - 9.4 mm (0.354 - 0.370 in.)
Valve	Valve overall length	STD Intake	89.25 mm (3.5138 in.)
		Exhaust	87.90 mm (3.4606 in.)
		Minimum Intake	88.75 mm (3.4941 in.)
		Exhaust	87.40 mm (3.4409 in.)
	Valve face angle		44.5˚
	Stem diameter	Intake	4.970 - 4.985 mm (0.19567 - 0.19626 in.)
		Exhaust	4.965 - 4.980 mm (0.19547 - 0.19606 in.)
	Stem oil clearance	STD Intake	0.025 - 0.060 mm (0.00098 - 0.00236 in.)
		Exhaust	0.030 - 0.065 mm (0.00118 - 0.00256 in.)
		Maximum Intake	0.08 mm (0.0031 in.)
		Exhaust	0.10 mm (0.0039 in.)
	Margin thickness	STD	1.00 - 1.15 mm (0.039 - 0.045 in.)
		Minimum	0.7 mm (0.028 in.)
Valve spring	Deviation	Maximum	1.6 mm (0.063 in.)
	Angle (Reference)	Maximum	2˚
	Free length		45.1 mm (1.776 in.)
	Installed tension at 32.5 mm (1.280 in.)		149 - 165 N (15.2 - 16.8 kgf, 33.5 - 37.1 lbf)
	Maximum working tension at 23.9 mm (0.941 in.)		286 - 316 N (29.1 - 32.2 kgf, 64.2 - 71.0 lbf)
Valve lifter	Lifter diameter		30.966 - 30.976 mm (1.21913 - 1.21952 in.)
	Lifter bore diameter		31.000 - 31.025 mm (1.22047 - 1.22145 in.)
	Oil clearance	STD	0.024 - 0.059 mm(0.00094 - 0.00232 in.)
		Maximum	0.1 mm (0.004 in.)
Camshaft	Thrust clearance	STD	0.040 - 0.095 mm (0.0016 - 0.0037 in.)
		Maximum	0.11 mm (0.0043 in.)
	Journal oil clearance	STD	0.040 - 0.095 mm (0.00157 - 0.00374 in.)
		Maximum	0.115 mm (0.00453 in.)
	Journal diameter	No.1	34.449 - 34.465 (1.35626 - 1.35689 in.)
		Others	22.949 - 22.965 (0.90350 - 0.90413 in.)
	Circle run out	Maximum	0.03 mm (0.0012 in.)
	Cam lobe height	STD	44.617 - 44.717 mm (1.75657 - 1.76051 in.)
		Exhaust	44.666 - 44.766 mm (1.75850 - 1.76244 in.)
		Minimum Intake	44.47 mm (1.7508 in.)
		Exhaust	44.52 mm (1.7528 in.)
Intake manifold	Warpage	Maximum	0.10 mm (0.0039 in.)
Exhaust manifold	Warpage	Maximum	0.70 mm (0.0276 in.)

Cylinder block	Cylinder head surface warpage	Maximum	0.05 mm (0.0020 in.)
	Cylinder bore diameter	STD	75.000 - 75.013 mm (2.95275 - 2.95326 in.)
		Maximum	75.013 mm (2.95326 in.)
	Main journal bore diameter	Mark 0	50.000 - 50.003 mm (1.96850 - 1.96862 in.)
		Mark 1	50.003 - 50.005 mm (1.96862 - 1.96870 in.)
		mark 2	50.005 - 50.007 mm (1.96870 - 1.96878 in.)
		Mark 3	50.007 - 50.010 mm (1.96878 - 1.96889 in.)
		Mark 4	50.010 - 50.012 mm (1.96889 - 1.96897 in.)
		Mark 5	50.012 - 50.014 mm (1.96897 - 1.96905 in.)
		Mark 6	50.014 - 50.016 mm (1.96905 - 1.96913 in.)
	12 pointed head bearing cap sub-assembly bolt diameter		
		at tension portion STD	7.3 - 7.5 mm (0.287 - 0.295 in.)
		Minimum	7.3 mm (0.287 in.)
Piston and Piston ring	Piston diameter		
		at 27 mm (1.063 in.) from the piston head	74.945 - 74.955 mm (2.95058 - 2.95098 in.)
	Piston oil clearance	STD	0.045 - 0.068 mm (0.00177 - 0.00268 in.)
		Maximum	0.08 mm (0.0031 in.)
	Piston ring groove clearance		0.030 - 0.070 mm (0.0012 - 0.0028 in.)
	Piston ring end gap	STD No. 1	0.25 - 0.35 mm (0.0098 - 0.0138 in.)
		No. 2	0.35 - 0.50 mm (0.0138 - 0.0197 in.)
		Oil	0.10 - 0.35 mm (0.0039 - 0.0138 in.)
		Maximum No. 1	0.91 mm (0.0358 in.)
		No. 2	1.06 mm (0.0417 in.)
		Oil	0.82 mm (0.0323 in.)
Connecting rod	Thrust clearance	STD	0.16 - 0.36 mm (0.0063 - 0.0142 in.)
		Maximum	0.36 mm (0.0142 in.)
	Connecting rod thickness		19.788 - 19.840 mm (0.779 - 0.781 in.)
	Connecting rod bearing center wall thickness		
	Reference	Mark 1	1.488 - 1.492 mm (0.0586 - 0.0587 in.)
		Mark 2	1.492 - 1.496 mm (0.0587 - 0.0589 in.)
		Mark 3	1.496 - 1.500 mm (0.0589 - 0.0591 in.)
	Connecting rod oil clearance	STD	0.016 - 0.040 mm (0.0006 - 0.0016 in.)
		Maximum	0.06 mm (0.0024 in.)
	Rod out-of-alignment	Maximum per 100 mm (3.94 in.)	0.05 mm (0.0020 in.)
	Rod twist	Maximum per 100 mm (3.94 in.)	0.05 mm (0.0020 in.)
	Bushing inside diameter		18.010 - 18.019 mm (0.7091 - 0.7094 in.)
	Piston pin diameter		17.988 - 18.007 mm (0.7086 - 0.7089 in.)
	Bushing oil clearance	STD	0.009 - 0.015 mm (0.0003 - 0.0006 in.)
		Maximum	0.05 mm (0.0020 in.)
	Connecting rod bolt diameter		
		at tension portion STD	6.6 - 6.7 mm (0.260 - 0.264 in.)
		Minimum	6.4 mm (0.252 in.)

Crankshaft	Thrust clearance	STD	0.090 - 0.190 mm (0.00354 - 0.00748 in.)
		Maximum	0.30 mm (0.012 in.)
	Thrust washer thickness		2.430 - 2.480 mm (0.09567 - 0.09764 in.)
	Main journal oil clearance	STD	0.010 - 0.023 mm (0.0004 - 0.0009 in.)
		Maximum	0.07 mm (0.0028 in.)
	Main journal diameter		
	Reference	Mark 0	46.000 - 46.002 mm (1.81102 - 1.81110 in.)
		Mark 1	46.002 - 46.004 mm (1.81110 - 1.81118 in.)
		Mark 2	46.004 - 46.006 mm (1.81118 - 1.81126 in.)
		Mark 3	46.006 - 46.008 mm (1.81126 - 1.81133 in.)
		Mark 4	46.008 - 46.010 mm (1.81133 - 1.81141 in.)
		Mark 5	46.010 - 46.012 mm (1.81141 - 1.81149 in.)
	Main bearing center wall thickness		
	Reference	Mark 1	1.992 - 1.995 mm (0.07843 - 0.07854 in.)
		Mark 2	1.995 - 1.998 mm (0.07854 - 0.07866 in.)
		Mark 3	1.998 - 2.001 mm (0.07866 - 0.07878 in.)
		Mark 4	2.001 - 2.004 mm (0.07878 - 0.07890 in.)
	Crank pin diameter		39.992 - 40.000 mm (1.5745 - 1.5748 in.)
	Circle run out	Maximum	0.03 mm (0.0012 in.)
	Main journal taper and out-of round	Maximum	0.02 mm (0.0008 in.)
	Crank pin taper and out-of round	Maximum	0.02 mm (0.0008 in.)

SS175-01

TORQUE SPECIFICATION

Part tightened		N·m	kgf·cm	ft·lbf
Plug x Timing chain cover		15	150	11
Chain vibration damper x Cylinder block		9.0	92	80 in .·lbf
Chain tensioner		9.0	92	80 in .·lbf
Timing chain cover	Bolt A	11	112	8
	Bolt B	24	245	18
	Bolt C	11	112	8
	Bolt D	24	245	18
	Bolt E	11	112	8
	Nut F	24	245	18
	Nut G	11	112	8
RH engine mounting bracket x Timing chain cover		55	561	41
Crankshaft position sensor x Timing chain cover	Bolt A	7.5	76	66 in .·lbf
	Bolt B	11	112	8
Oil control valve		8.0	82	71 in .·lbf
Crankshaft pulley x Crankshaft		128	1,300	94
Cylinder head cover x Cylinder		10	100	7
RH engine mounting insulator	Bolt A	45	459	33
	Bolt B	52	530	38
	Nut	52	530	38
Cylinder head x Cylinder block	1st	29.4	300	22
	2nd	Turn 90˚	Turn 90˚	Turn 90˚
	3rd	Turn 90˚	Turn 90˚	Turn 90˚
Water bypass pipe x Cylinder head		9.0	92	80 in .·lbf
No. 1 camshaft bearing cap x Cylinder head		23	235	17
No. 2 camshaft bearing cap x Cylinder head		12.7	130	10
Camshaft timing sprocket x Camshaft		64	650	47
Valve timing controller assembly x Camshaft		64	650	47
Intake manifold x Cylinder head		30	300	22
Exhaust manifold x Cylinder head		27	275	20
Upper heat insulator x Exhaust manifold		8.0	82	71 in .·lbf
Exhaust manifold stay x Cylinder block		37	377	27
Front exhaust pipe x Exhaust manifold		62	630	46
Water filler x Cylinder head		7.5	76	66 in .·lbf
Engine hanger x Cylinder head		38	388	28
LH engine mounting		49	500	36
Rear engine mounting bracket		49	500	36
Front exhaust pipe x Tailpipe	Bolt A	62	630	46
	Bolt B	32	330	24
Clutch release cylinder x Transaxle		12	120	9
Clutch release cylinder bracket x Transaxle		4.9	50	43 in.·lbf
A/C compressor x Engine		25	250	18
Air cleaner case		7.5	76	66 in.·lbf
Air cleaner inlet assembly		7.5	76	66 in.·lbf
Connecting rod cap x Connecting rod	1st	15	150	11
	2nd	Turn 90˚	Turn 90˚	Turn 90˚

Bearing cap x Cylinder block	1st 2nd	22 Turn 90˚	220 Turn 90˚	16 Turn 90˚
Oil pan No. 1 x Cylinder block		24	245	18
Oil strainer x Oil pan No. 1		11	112	8
Oil pan No. 2 x Oil pan No. 1		9.0	92	80 in.·lbf
Oil filter union x Oil pan No. 1		30	306	21
Engine coolant drain union x Cylinder block		35	350	25
Knock sensor x Cylinder block		39	400	29
Water bypass pipe x Cylinder block		9.0	90	80 in.·lbf
Flywheel x Crankshaft	1st 2nd	49 Turn 90˚	500 Turn 90˚	36 Turn 90˚
Drive plate x Crank shaft		88	890	65

IGNITION

SS17A-01

SERVICE DATA

Spark plug	Recommended spark plug	DENSO	SK16R11
		NGK	IFR5A11
	Electrode gap		1.1 mm (0.043 in.)
Camshaft position sensor	Resistance	at cold	1,630 - 2,740 Ω
		at hot	2,065 - 3,225 Ω
Crankshaft position sensor	Resistance	at cold	985 - 1,600 Ω
		at hot	1,265 - 1,890 Ω

SS17B-01

TORQUE SPECIFICATION

Part tightened	N·m	kgf·cm	ft·lbf
Spark plug x Cylinder head	18	184	13
Ignition coil x Cylinder head	9.0	92	80 in.·lbf
Camshaft position sensor x Cylinder head	8.0	82	71 in.·lbf
Crankshaft position sensor x Cylinder block	7.5	76	66 in.·lbf

LUBRICATION

SS178-01

SERVICE DATA

Oil pressure		at idle speed	29 kPa (0.3 kgf/cm^2,4.3 psi) or more
		at 3,000 rpm	150 - 550 kPa (1.5 - 5.6 kgf/cm^2, 22 - 80 psi)
Oil pump	Side clearance	STD	0.03 - 0.09 mm (0.0012 - 0.0035 in.)
		Maximum	0.15 mm (0.0059 in.)
	Tip clearance	STD	0.060 - 0.180 mm (0.0024 - 0.0071 in.)
		Maximum	0.28 mm (0.0110 in.)
	Body clearance	STD	0.250 - 0.325 mm (0.00984 - 0.01280 in.)
		Maximum	0.425 mm (0.01673 in.)

SS179-01

TORQUE SPECIFICATION

Part tightened		N·m	kgf·cm	ft·lbf
Oil pressure switch x Cylinder block		13	130	9
Oil drain plug x Oil pan		38	387	28
Plug x Oil pump body		24	245	18
Oil pump cover x Timing chain cover	Bolt	9.0	92	80 in.·lbf
	Screw	11	110	8

MAINTENANCE

SS17C-01

SERVICE DATA

Front axle and suspension		
Ball joint vertical play	Maximum	0 mm (0 in.)

SS17D-01

TORQUE SPECIFICATION

Part tightened	N·m	kgf·cm	ft·lbf
Front seat mounting bolts	37	375	27

MANUAL TRANSAXLE

SS0KT-04

SERVICE DATA

Input shaft roller bearing journal diameter	Min.	24.967 mm (0.9830 in.)
Input shaft 3rd gear journal diameter	Min.	30.985 mm (1.2199 in.)
Input shaft 4th gear journal diameter	Min.	28.985 mm (1.1411 in.)
Input shaft 5th gear journal diameter	Min.	24.885 mm (0.9797 in.)
Input shaft runout	Max.	0.03 mm (0.0012 in.)
Output shaft roller bearing journal diameter	Min.	32.985 mm (1.2986 in.)
Output shaft 1st gear journal diameter	Min.	37.985 mm (1.4955 in.)
Output shaft 2nd gear journal diameter	Min.	31.985 mm (1.2592 in.)
Output shaft runout	Max.	0.03 mm (0.0012 in.)
Gear thrust clearance 1st	STD Max.	0.10 - 0.40 mm (0.0039 - 0.0157 in.) 0.40 mm (0.0157 in.)
Gear thrust clearance 2nd	STD Max.	0.10 - 0.55 mm (0.0039 - 0.0217 in.) 0.55 mm (0.0217 in.)
Gear thrust clearance 3rd	STD Max.	0.10 - 0.35 mm (0.0039 - 0.0138 in.) 0.35 mm (0.0138 in.)
Gear thrust clearance 4th	STD Max.	0.10 - 0.55 mm (0.0039 - 0.0217 in.) 0.55 mm (0.0217 in.)
Gear thrust clearance 5th	STD Max.	0.10 - 0.57 mm (0.0039 - 0.0224 in.) 0.57 mm (0.0224 in.)
1st, 2nd, 3rd, 4th and 5th gear radial clearance (KOYO made)	STD Max.	0.015 - 0.058 mm (0.0006 - 0.0023 in.) 0.058 mm (0.0023 in.)
1st, 2nd, 3rd, 4th and 5th gear radial clearance (NSK made)	STD Max.	0.015 - 0.056 mm (0.0006 - 0.0022 in.) 0.056 mm (0.0022 in.)
No. 3 shift fork to No. 3 hub sleeve clearance	Max.	0.5 mm (0.020 in.)
No. 2 shift fork to No. 2 hub sleeve clearance	Max.	0.35 mm (0.014 in.)
No. 1 shift fork to reverse gear clearance	Max.	0.35 mm (0.014 in.)
Synchronizer ring to gear clearance	Min.	0.75 mm (0.0295 in.)
Drive in depth Input shaft front oil seal Control shaft cover oil seal Select inner lever slotted spring pin No. 1 shift inner lever slotted spring pin No. 2 shift inner lever slotted spring pin Transmission case oil seal Transaxle case oil seal		 15.8 ± 0.2 mm (0.622 ± 0.008 in.) 1.0 - 2.0 mm (0.039 - 0.079 in.) 0 ± 0.5 mm (0 ± 0.020 in.) 0 ± 0.5 mm (0 ± 0.020 in.) 0 ± 0.5 mm (0 ± 0.020 in.) 2.4 ± 0.3 mm (0.094 ± 0.012 in.) 1.9 ± 0.3 mm (0.075 ± 0.012 in.)
Differential side gear backlash		0.05 - 0.20 mm (0.0020 - 0.0079 in.)
Differential side gear thrust washer thickness		1.50 mm (0.0591 in.) 1.55 mm (0.0610 in.) 1.60 mm (0.0630 in.) 1.65 mm (0.0650 in.) 1.70 mm (0.0669 in.) 1.75 mm (0.0689 in.)
Differential side bearing preload (at starting) (For use with SST) New bearing Reused bearing		 0.8 - 1.6 N·m (8 - 16 kgf·cm, 6.9 - 13.9 in.·lbf) 0.5 - 1.0 N·m (5 - 10 kgf·cm, 4.3 - 8.7 in.·lbf)

Input shaft snap ring thickness		
No. 2 clutch hub	Mark 0	2.30 mm (0.0906 in.)
	Mark 1	2.36 mm (0.0929 in.)
	Mark 2	2.42 mm (0.0953 in.)
	Mark 3	2.48 mm (0.0976 in.)
	Mark 4	2.54 mm (0.1000 in.)
	Mark 5	2.60 mm (0.1024 in.)
No. 3 clutch hub	Mark A	2.25 mm (0.0886 in.)
	Mark B	2.31 mm (0.0909 in.)
	Mark C	2.37 mm (0.0933 in.)
	Mark D	2.43 mm (0.0957 in.)
	Mark E	2.49 mm (0.0980 in.)
	Mark F	2.55 mm (0.1004 in.)
	Mark G	2.61 mm (0.1028 in.)
Input shaft rear bearing	Mark A	2.29 mm (0.0902 in.)
	Mark B	2.35 mm (0.0925 in.)
	Mark C	2.41 mm (0.0949 in.)
	Mark D	2.47 mm (0.0972 in.)
	Mark E	2.53 mm (0.0996 in.)
	Mark F	2.59 mm (0.1020 in.)
Output shaft snap ring thickness		
No. 1 clutch hub	Mark A	2.50 mm (0.0984 in.)
	Mark B	2.56 mm (0.1008 in.)
	Mark C	2.62 mm (0.1031 in.)
	Mark D	2.68 mm (0.1055 in.)
	Mark E	2.74 mm (0.1079 in.)
	Mark F	2.80 mm (0.1102 in.)
Differential side bearing adjusting shim thickness		
	Mark AA	2.10 mm (0.0827 in.)
	Mark BB	2.15 mm (0.0846 in.)
	Mark CC	2.20 mm (0.0866 in.)
	Mark DD	2.25 mm (0.0886 in.)
	Mark EE	2.30 mm (0.0906 in.)
	Mark FF	2.35 mm (0.0925 in.)
	Mark GG	2.40 mm (0.0945 in.)
	Mark HH	2.45 mm (0.0965 in.)
	Mark JJ	2.50 mm (0.0984 in.)
	Mark KK	2.55 mm (0.1004 in.)
	Mark LL	2.60 mm (0.1024 in.)
	Mark MM	2.65 mm (0.1043 in.)
	Mark NN	2.70 mm (0.1063 in.)
	Mark PP	2.75 mm (0.1083 in.)
	Mark QQ	2.80 mm (0.1102 in.)
	Mark RR	2.85 mm (0.1122 in.)
	Mark SS	2.90 mm (0.1142 in.)
	Mark TT	2.95 mm (0.1161 in.)
	Mark UU	3.00 mm (0.1181 in.)

SS0KU-04

TORQUE SPECIFICATION

Part tightened	N·m	kgf·cm	ft·lbf
No. 2 cylinder head cover	7.0	71	62 in.·lbf
Clutch line bracket set bolt	4.9	50	43 in.·lbf
Clutch release cylinder x Transaxle	12	120	9
Transaxle x Engine	33	340	25
Starter x Transaxle	39	400	29
No. 1 engine hanger	40	400	29
Engine left mounting bracket x Engine left mounting insulator	49	490	35
Engine rear mounting insulator x Engine rear mounting bracket	64	650	47
Engine rear mounting bracket x Transaxle	49	500	36
Shift lever assembly x Body	12	120	9
Shift and select control cable x Body	4.9	50	43 in.·lbf
Clutch release fork support	37	375	27
Filler and drain plugs	39	400	29
Vehicle speed sensor	11	115	8
Back-up light switch	40	410	30
Control lever housing support bracket x Transaxle case	11	115	8
Selecting bellcrank assembly x Transmission case	25	250	18
Transmission case x Transmission case cover	18	185	13
Shift and select lever shaft assembly lock bolt	29	300	22
Shift and select lever assembly	20	200	14
Output shaft lock nut	118	1,200	87
Shift fork and shift head x Shift fork shaft	16	160	12
Rear bearing retainer	27	280	20
Reverse idler gear shaft lock bolt	29	300	22
Straight screw plug (Shift fork shaft)	25	250	18
Lock ball assembly	39	400	29
Transmission case x Transaxle case	29	300	22
Oil receiver pipe x Transmission case	17	175	13
Reverse shift arm bracket	17	175	13
Output shaft front bearing lock plate set bolt	11	115	8
Transaxle case receiver x Transaxle case	11	115	8
Straight screw plug (Reverse restrict pin)	13	130	9
Ring gear x Differential case	124	1,260	91

SUPPLEMENTAL RESTRAINT SYSTEM

SS061-55

TORQUE SPECIFICATION

Part tightened		N·m	kgf·cm	ft·lbf
Steering wheel		50	510	37
Steering wheel pad		8.8	90	78 in.·lbf
Front passenger airbag assembly x Instrument panel reinforcement		18	185	13
Airbag sensor assembly		20	205	15
Front airbag sensor		20	205	15
Seat cushion assembly x Body		37	375	27
Seatback assembly x Seat cushion assembly		43	440	32
Front seat inner belt set bolt		41	420	30
Door side airbag sensor x Door	2-Door	20	205	15
Side airbag sensor x Body		20	205	15

SUSPENSION AND AXLE

SS13W-07

SERVICE DATA

Cold tire inflation pressure	Tire size: P175/65R14 81S	Front Rear	220 kPa (2.2 kgf/cm^2, 32 psi) 220 kPa (2.2 kgf/cm^2, 32 psi)
Front wheel alignment	Vehicle height P175/65R14	 Front*1 Rear*2	 187 mm (7.36 in.) 264 mm (10.39 in.)
	Camber	 Right-left error	-0 ˚37' ± 45' (-0.62˚ ± 0.75˚) 45' (0.75˚) or less
	Caster	 Manual steering Power steering Right-left error	 0˚48' ± 45' (0.80˚ ± 0.75˚) 1˚46' ± 45' (1.77˚ ± 0.75˚) 45' (0.75˚) or less
	Steering axis inclination	 Right-left error	10˚08' ± 45' (10.13˚ ± 0.75˚) 45' (0.75˚) or less
	Toe-in (total)	 Rack end length difference	0˚ ± 12' (0˚ ± 0.2˚, 0 ± 2 mm, 0 ± 0.08 in.) 1.5 mm (0.059 in.) or less
	Wheel angle Manual steering Power steering 	 Inside wheel Outside wheel: Reference Inside wheel Outside wheel: Reference	 36˚56' ± 2˚ (36.44˚ ± 2˚) 32˚07' (32.12˚) 36˚56' ± 2˚ (36.93˚ ± 2˚) 32˚17' (32.28˚)
Rear wheel alignment	Camber	 Right-left error	-0 ˚57' ± 45' (-0.95˚ ± 0.75˚) 45' (0.75˚) or less
	Toe-in (total)		0˚21' ± 20' (0.35˚ ± 0.33˚) 3.3 ± 3.0 mm (0.13 ± 0.12 in.)
Front axle	Axle bearing backlash	Maximum	0.05 mm (0.0020 in.)
	Axle hub deviation	Maximum	0.05 mm (0.0020 in.)
Front drive shaft	Drive shaft standard length	LH RH	574.3 ± 5.0 mm (22.610 ± 0.197 in.) 813.3 ± 5.0 mm (32.020 ± 0.197 in.)
Front suspension	Lower suspension arm ball joint turning torque		0.59 - 3.43 N·m (6 - 35 kgf·cm, 5.2 - 30 in.·lbf)
Rear axle	Axle bearing backlash	Maximum	0.05 mm (0.0020 in.)
	Axle hub deviation	Maximum	0.07 mm (0.0028 in.)

*1: Front measuring point
Measure the distance from the ground to the head center of the front side lower suspension arm mounting bolt.
*2: Rear measuring point
Measure the distance from the ground to the center of the rear axle beam mounting bolt.

SS13X-05

TORQUE SPECIFICATION

Part tightened		N·m	kgf·cm	ft·lbf
FRONT AXLE				
Hub nut		103	1,050	76
Tie rod end lock nut		47	480	35
Steering knuckle x Shock absorber		132	1,350	97
Steering knuckle x Brake caliper		88	900	65
Steering knuckle x Tie rod end		49	500	36
Axle hub x Drive shaft		216	2,200	159
Lower suspension arm x Steering knuckle		98	1,000	72
Steering knuckle x Dust cover		8.3	85	74 in.·lbf
ABS speed sensor set bolt		8.0	82	71 in.·lbf
FRONT SUSPENSION				
Suspension support x Body		39	400	29
Suspension support x Piston rod		33	340	24
Flexible hose and ABS speed sensor wire harness clamp x Shock absorber		29	300	22
Lower suspension arm front side set bolt		88	900	65
Lower suspension arm rear side set bolt		132	1,350	97
Engine rear mount x Suspension member		80	810	59
Suspension member set bolt	Front side	70	715	52
	Rear side	116	1,185	86
Stabilizer bar bracket set bolt		19	190	14
Stabilizer bar link set nut		18	180	13
REAR AXLE				
Hub nut		103	1,050	76
Axle hub set bolt		52	526	38
REAR SUSPENSION				
Shock absorber x Body		25	250	18
Shock absorber x Rear axle beam		49	500	36
Seat belt set bolt		41	420	30
Rear seatback set bolt		37	380	27
Brake line x Flexible hose		15	155	11
ABS speed sensor wire harness clamp set bolt		5.4	55	48 in.·lbf
Parking brake cable clamp set nut		5.4	55	48 in.·lbf
Axle beam x Body		82	837	60

SFI

SS102-04

SERVICE DATA

Fuel pump	Resistance	at 20˚C (68˚F)	0.2 - 3.0 Ω
Injector	Resistance	at 20 ˚C(68 ˚F)	13.4 - 14.2 Ω
	Injection volume		47 - 58 cm^3 (2.7 - 3.3 cu in.) per 15 sec.
	Difference between each cylinder		10 cm^3 (0.7 cu in.) or less
	Fuel leakage		1 drop or less per 12 minutes
Air flow meter	Resistance		
	at -20˚C (-4˚F)	THA - E2	13.6 - 18.4 kΩ
	at 20˚C (68˚F)	THA - E2	2.21 - 2.69 kΩ
	at 60˚C (140˚F)	THA - E2	0.49 - 0.67 kΩ
Throttle position sensor	Resistance		
	Throttle valve fully closed	VTA - E2	0.2 - 5.7 kΩ
	Throttle valve fully open	VTA - E2	2.0 - 10.2 kΩ
	-	VC - E2	2.5 - 5.9 kΩ
VSV for EVAP	Resistance	at 20˚C (68˚F)	27 - 33 Ω
ECT sensor	Resistance	at -20˚C (-4˚F)	10 - 20 kΩ
		at 0˚C (32˚F)	4 - 7 kΩ
		at 20˚C (68˚F)	2 - 3 kΩ
		at 40˚C (104˚F)	0.9 - 1.3 kΩ
		at 60˚C (140˚F)	0.4 - 0.7 kΩ
		at 80˚C (176˚F)	0.2 - 0.4 kΩ
Vapor pressure sensor	Power source voltage		4.5 - 5.5 V
	Remove fuel tank cap	Terminal 2 - 3	3.0 - 3.6 V
Heated oxygen sensor	Heater coil resistance	at 20˚C (68˚F)	11 - 16 Ω
Fuel cut rpm	Fuel return rpm		1,400 rpm

SS103-04

TORQUE SPECIFICATION

Part tightened	N·m	kgf·cm	ft·lbf
Fuel pump assembly x Fuel tank	4.0	40	35 in.·lbf
Delivery pipe x Cylinder head	19	190	14
Fuel tank x Body	32	325	24
Fuel inlet pipe x Body	34	345	25
Throttle body x Intake manifold	30	305	22
Camshaft timing oil control valve x Cylinder head	4.0	40	35 in.·lbf
Knock sensor x Cylinder block	39	400	29
Heated oxygen sensor (Bank1 sensor1) x Exhaust manifold	44	440	31
Heated oxygen sensor (Bank1 sensor2) x Exhaust pipe	44	440	31

STEERING

SERVICE DATA

SS0MY-10

DRIVE BELT		
*Drive belt tension	New belt	440 - 540 N (45 - 55 kgf)
	Used belt	240 - 340 N (25 - 35 kgf)
POWER STEERING FLUID		
Fluid level rise	Maximum	5 mm (0.20 in.)
Fluid pressure at idle speed with valve closed	Minimum	5,400 kPa (55 kgf/cm^2, 781 psi)
STEERING WHEEL		
Steering wheel freeplay	Maximum	30 mm (1.18 in.)
Steering effort at idle speed	Reference	
	Manual steering	28 N·m (285 kgf·cm, 21 ft·lbf)
	Power steering	6.5 N·m (65 kgf·cm, 58 in.·lbf)
POWER STEERING VANE PUMP		
Vane pump rotating torque		0.27 N·m (2.8 kgf·cm, 2.4 in.·lbf) or less
Vane pump shaft and front housing bushing oil clearance	STD	0.021 - 0.043 mm (0.0008 - 0.0017 in.)
	Maximum	0.07 mm (0.0028 in.)
Vane plate height	Minimum	7.6 mm (0.299 in.)
Vane plate thickness	Minimum	1.405 mm (0.0553 in.)
Vane plate length	Minimum	11.993 mm (0.4722 in.)
Vane plate and vane pump rotor groove clearance	Maximum	0.03 mm (0.0012 in.)
Vane plate length	Pump rotor and cam ring mark	
	0	12.001 - 12.003 mm (0.47248 - 0.47256 in.)
	1	11.999 - 12.001 mm (0.47240 - 0.47248 in.)
	2	11.997 - 11.999 mm (0.47232 - 0.47240 in.)
	3	11.995 - 11.997 mm (0.47224 - 0.47232 in.)
	4	11.993 - 11.995 mm (0.47216 - 0.47224 in.)
Spring free length	Minimum	35.8 mm (1.409 in.)
MANUAL STEERING GEAR		
Steering rack runout	Maximum	0.15 mm (0.0059 in.)
Total preload	Turning	0.6 - 1.5 N·m (6 - 15 kgf·cm, 5.2 - 13.0 in.·lbf)
POWER STEERING GEAR		
Steering rack runout	Maximum	0.1 mm (0.004 in.)
Total preload	Turning	1.2 - 1.4 N·m (12 - 14 kgf·cm, 10.4 - 12.2 in.·lbf)

* For use with belt tension gauge

SS141-07

TORQUE SPECIFICATION

Part tightened		N·m	kgf·cm	ft·lbf
TILT STEERING COLUMN				
Adjusting nut		See page SR-18		
No. 2 tilt lever lock bolt		5.4	55	48 in.·lbf
No. 2 intermediate shaft assembly x Main shaft assembly		28	290	21
Column assembly set bolt		21	210	15
Sliding yoke x No. 3 intermediate shaft assembly		28	290	21
No. 2 intermediate shaft assembly x Sliding yoke		28	290	21
Steering wheel set nut		50	510	37
Steering wheel pad set screw (Torx screw)		8.8	90	78 in.·lbf
POWER STEERING VANE PUMP				
Rear housing x Front housing		22	220	16
Oil pressure sensor		21	210	15
Pressure port union		69	700	51
Front and rear bracket x Pump housing		44	440	32
Heat insulator and rear stay x Rear housing		44	440	32
Oil reservoir x Pump housing		9.0	90	78 in.·lbf
Pump assembly set bolt	Bolt A	44	440	32
	Bolt B	44	440	32
	Bolt C	44	440	32
Pressure feed tube x Pump assembly		41 (44)	420 (450)	30 (33)
MANUAL STEERING GEAR				
Engine hanger set bolt		20	200	15
Rack guide spring cap lock nut		36 (49)	365 (500)	26 (36)
Rack end x Rack		62 (83)	630 (850)	46 (61)
Tie rod end lock nut		47	480	35
Engine rear mount bracket set bolt		49	500	36
Engine rear mount bracket x Engine rear mount insulator		64	650	47
No. 3 intermediate shaft assembly x Steering pinion		28	290	21
Manual steering gear assembly set bolt		74	750	54
Front suspension member x Frame	Bolt A	116	1,180	86
	Bolt B	70	710	52
Engine rear mount insulator x Front suspension member		80	810	59
Lower suspension arm x Steering knuckle		98	1,000	72
Engine hood x Hinge		11	110	8
Tie rod end x Steering knuckle		49	500	36
POWER STEERING GEAR				
Engine hanger set bolt		20	200	15
Control valve housing x Rack housing		21	220	15
Rack guide spring cap lock nut		28 (39)	290 (400)	21 (29)
Rack end x Rack		62 (83)	630 (850)	46 (61)
Tie rod end lock nut		47	480	35
Turn pressure tube x Rack housing		11 (13)	110 (130)	8 (9)
Engine rear mount bracket set bolt		49	500	36
Engine rear mount bracket x Engine rear mount insulator		64	650	47

Part tightened		N·m	kgf·cm	ft·lbf
No. 3 intermediate shaft assembly x Control valve shaft		28	290	21
PS gear assembly set bolt		74	750	54
Dynamic damper (with rack housing heat insulator) set bolt		18	180	13
Rack housing heat insulator set bolt		35	360	26
Front suspension member x Frame	Bolt A	116	1,180	86
	Bolt B	70	710	52
Engine rear mount insulator x Front suspension member		80	810	59
Lower suspension arm x Steering knuckle		98	1,000	72
Engine hood x Hinge		11	110	8
Tube clamp		7.8	80	69 in.·lbf
Pressure feed and return tube		27 (25)	280 (250)	20 (18)

( ): For use without SST

STARTING

SERVICE DATA

SS0NF-03

Starter	Rated voltage and output power	USA	12 V 0.8 kW
		Canada, Puerto Rico	12 V 1.0 kW
	Circle runout	Maximum	0.05 mm (0.0020 in.)
	No-load characteristics	Current	90 A or less at 11.5 V
		rpm	3,000 rpm or more
	Carrier shaft diameter		14.980 - 15.000 mm (0.5898 - 0.5906 in.)
	Center bearing inside diameter		15.008 - 15.050 mm (0.5908 -0.5925 in.)
	Center bearing oil clearance	STD	0.01 - 0.06 mm (0.0004 -0.0024 in.)
		Maximum	0.2 mm (0.0078 in.)
	Brush length		
		STD	14.0 mm (0.551 in.)
		Minimum	9.0 mm (0.354 in.)
	Spring installed load	STD	13.7 - 17.6 N (1.4 - 1.8 kgf, 3.1 - 4.0 lbf)
		Minimum	8.8 N (0.9 kgf, 2.0 lbf)
	Commutator		
	Diameter	STD	28.0 mm (1.102 in.)
		Minimum	27.0 mm (1.063 in.)
	Undercut depth	STD	0.6 mm (0.024 in.)
		Minimum	0.2 mm (0.008 in.)

SS0NG-03

TORQUE SPECIFICATION

Part tightened	N·m	kgf·cm	ft·lbf
End cover x Brush holder	1.5	15	13 in.·lbf
End cover x Starter housing	5.9	60	52 in.·lbf
Magnetic switch x Starter housing	8.3	85	73 in.·lbf
Lead wire of field frame x Magnetic switch	9.8	100	87 in.·lbf

STANDARD BOLT

HOW TO DETERMINE BOLT STRENGTH

SS0ZS-01

Bolt Type				Class
Hexagon Head Bolt		Stud Bolt	Weld Bolt	
Normal Recess Bolt	Deep Recess Bolt			
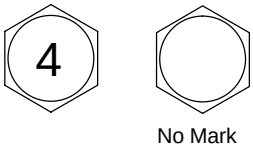 No Mark	 No Mark	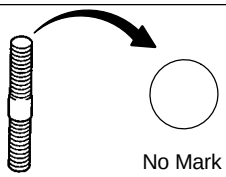 No Mark	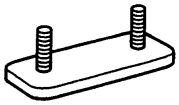	4T
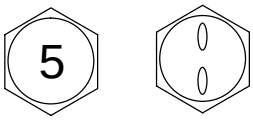	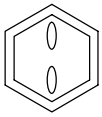			5T
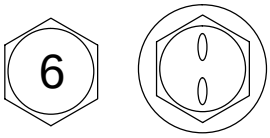 w/ Washer	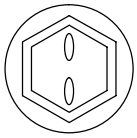 w/ Washer			6T
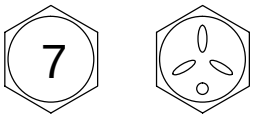	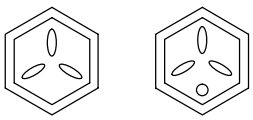			7T
				8T
				9T
	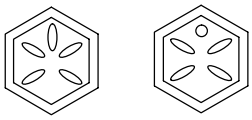			10T
	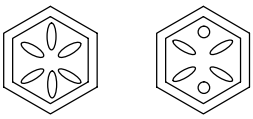			11T

B06431

SS0ZU-01

HOW TO DETERMINE NUT STRENGTH

Nut Type			Class
Present Standard Hexagon Nut	Old Standard Hexagon Nut		
	Cold Forging Nut	Cutting Processed Nut	
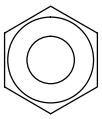 No Mark			4N
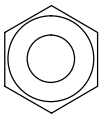 No Mark (w/ Washer)	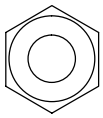 No Mark (w/ Washer)	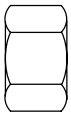 No Mark	5N (4T)
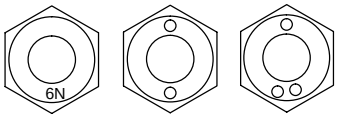 6N			6N
	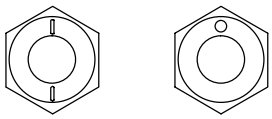	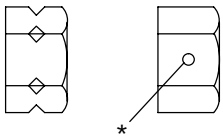 *	7N (5T)
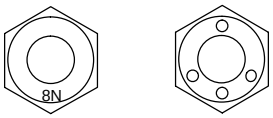 8N			8N
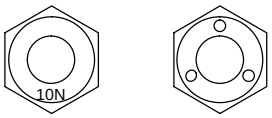 10N	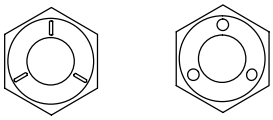	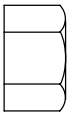 No Mark	10N (7T)
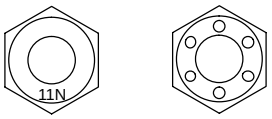 11N			11N
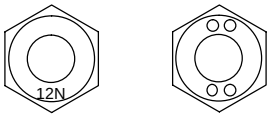 12N			12N

*: Nut with 1 or more marks on one side surface of the nut.

B06432

HINT:

Use the nut with the same number of the nut strength classification or the greater than the bolt strength classification number when tightening parts with a bolt and nut.

Example: Bolt = 4T

Nut = 4N or more

SS0ZT-01

SPECIFIED TORQUE FOR STANDARD BOLTS

Class	Diameter mm	Pitch mm	Specified torque					
			Hexagon head bolt			Hexagon flange bolt		
			N·m	kgf·cm	ft·lbf	N·m	kgf·cm	ft·lbf
4T	6	1	5	55	48 in.·lbf	6	60	52 in.·lbf
	8	1.25	12.5	130	9	14	145	10
	10	1.25	26	260	19	29	290	21
	12	1.25	47	480	35	53	540	39
	14	1.5	74	760	55	84	850	61
	16	1.5	115	1,150	83	-	-	-
5T	6	1	6.5	65	56 in.·lbf	7.5	75	65 in.·lbf
	8	1.25	15.5	160	12	17.5	175	13
	10	1.25	32	330	24	36	360	26
	12	1.25	59	600	43	65	670	48
	14	1.5	91	930	67	100	1,050	76
	16	1.5	140	1,400	101	-	-	-
6T	6	1	8	80	69 in.·lbf	9	90	78 in.·lbf
	8	1.25	19	195	14	21	210	15
	10	1.25	39	400	29	44	440	32
	12	1.25	71	730	53	80	810	59
	14	1.5	110	1,100	80	125	1,250	90
	16	1.5	170	1,750	127	-	-	-
7T	6	1	10.5	110	8	12	120	9
	8	1.25	25	260	19	28	290	21
	10	1.25	52	530	38	58	590	43
	12	1.25	95	970	70	105	1,050	76
	14	1.5	145	1,500	108	165	1,700	123
	16	1.5	230	2,300	166	-	-	-
8T	8	1.25	29	300	22	33	330	24
	10	1.25	61	620	45	68	690	50
	12	1.25	110	1,100	80	120	1,250	90
9T	8	1.25	34	340	25	37	380	27
	10	1.25	70	710	51	78	790	57
	12	1.25	125	1,300	94	140	1,450	105
10T	8	1.25	38	390	28	42	430	31
	10	1.25	78	800	58	88	890	64
	12	1.25	140	1,450	105	155	1,600	116
11T	8	1.25	42	430	31	47	480	35
	10	1.25	87	890	64	97	990	72
	12	1.25	155	1,600	116	175	1,800	130

STARTER

COMPONENTS

ST0HT-01

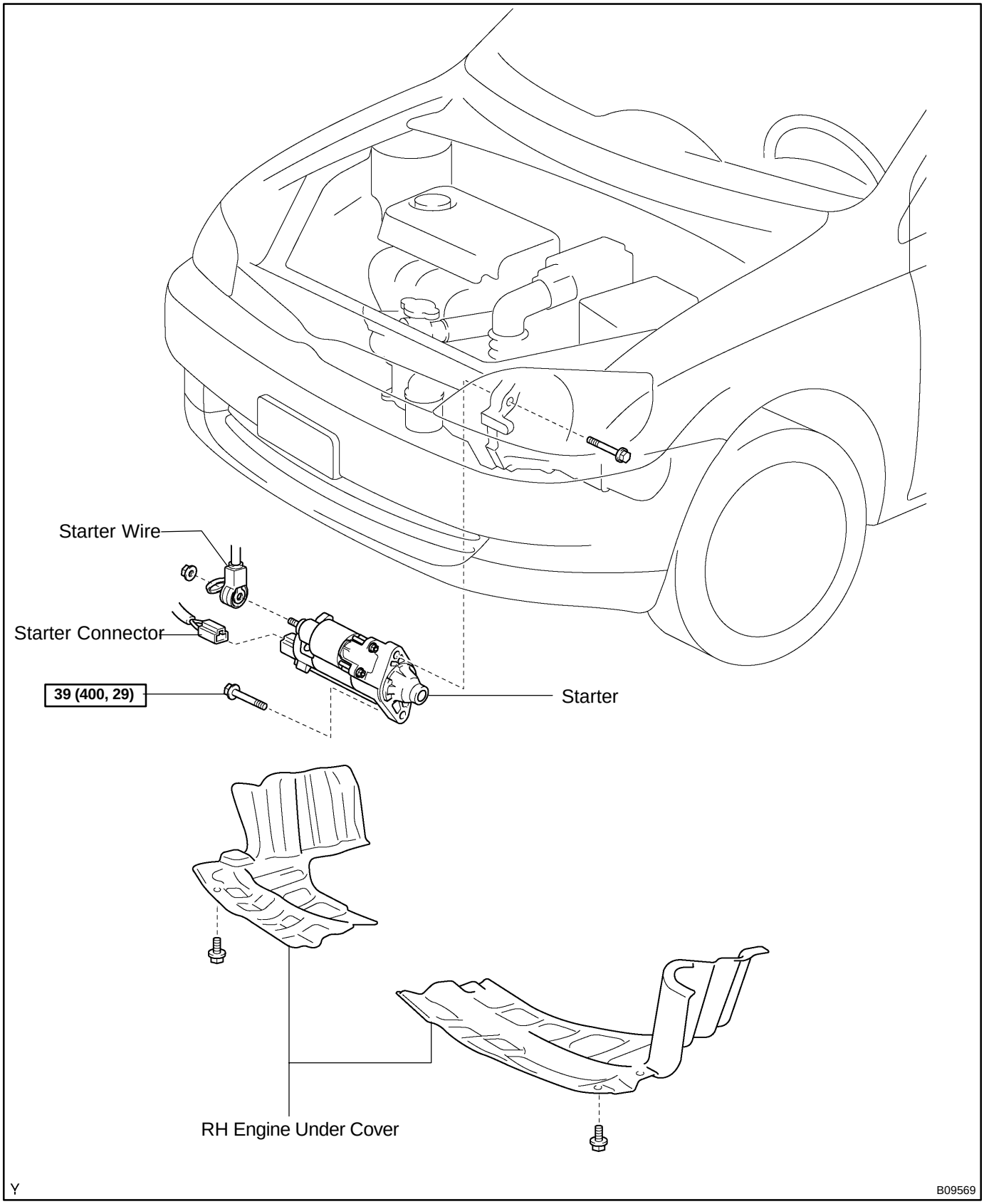

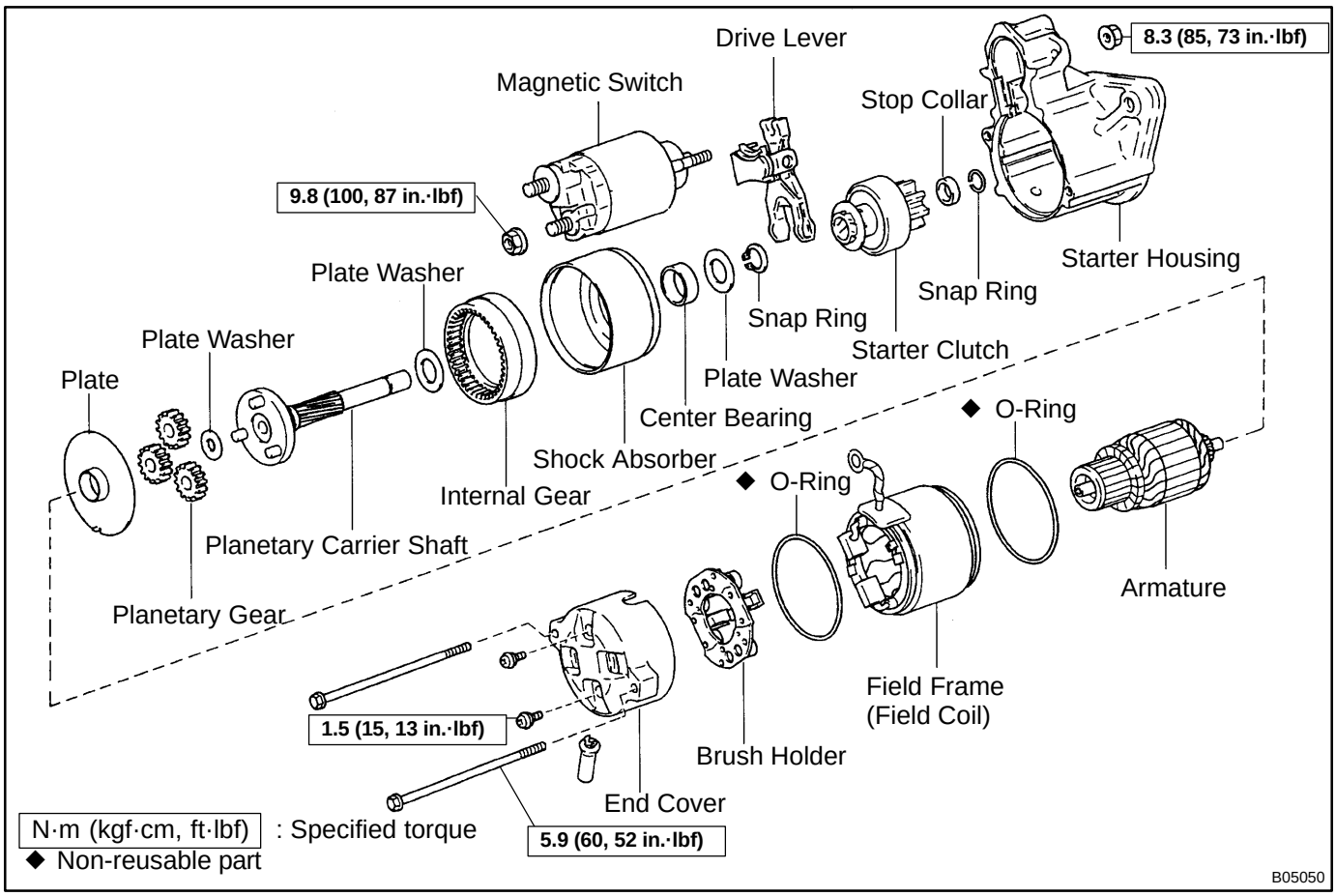
Drive Lever
8.3 (85, 73 in.·lbf)
Magnetic Switch
Stop Collar
9.8 (100, 87 in.·lbf)
Starter Housing
Plate Washer
Snap Ring
Snap Ring
Plate Washer
Starter Clutch
Plate Washer
Plate
◆ O-Ring
Center Bearing
Shock Absorber
◆ O-Ring
Internal Gear
Armature
Planetary Carrier Shaft
Planetary Gear
Field Frame
(Field Coil)
1.5 (15, 13 in.·lbf)
Brush Holder
End Cover
5.9 (60, 52 in.·lbf)
N·m (kgf·cm, ft·lbf) : Specified torque
◆ Non-reusable part
B05050

ST082-04

DISASSEMBLY

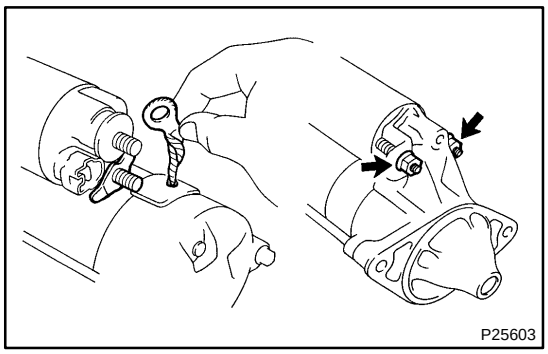

1. REMOVE MAGNETIC SWITCH

(a) Remove the nut, and disconnect the lead wire from the magnetic switch terminal.

(b) Remove the 2 nuts holding the magnetic switch to the starter housing.

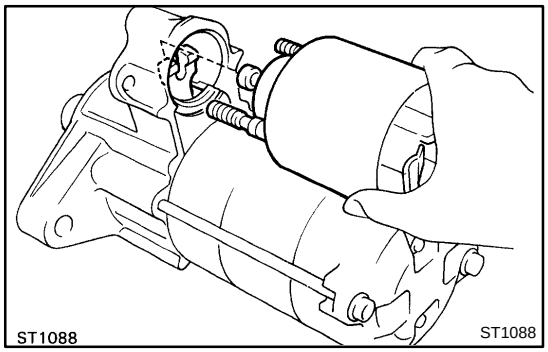

(c) Pull the magnetic switch and while lifting the front part of the magnetic switch, release the plunger hook from the drive lever, then release the magnetic switch.

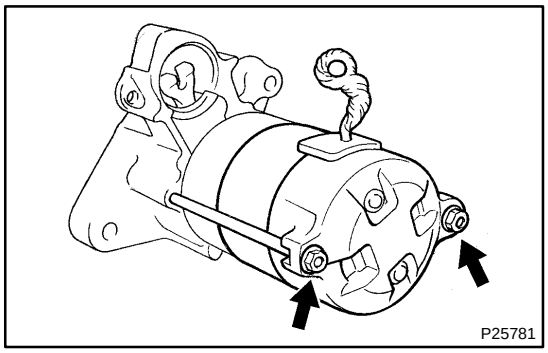

2. REMOVE FIELD FRAME AND ARMATURE

(a) Remove the 2 through bolts.

(b) Pull out the field frame together with the armature.

(c) Remove the O-ring from the field frame.

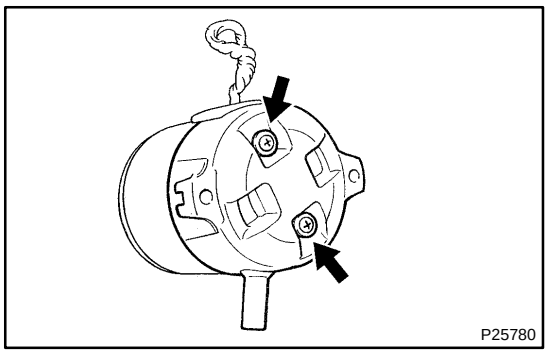

3. REMOVE BRUSH HOLDER

(a) Remove the 2 screws and end cover from the field frame.

(b) Remove the O-ring from the field frame.

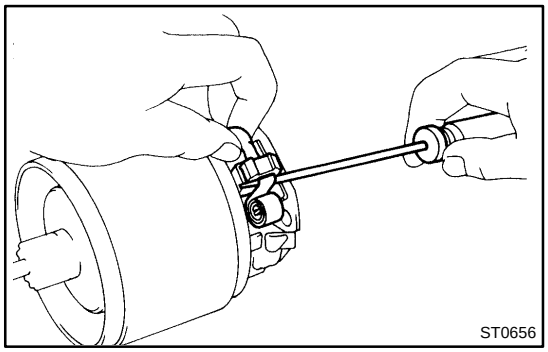

(c) Using a screwdriver, hold the spring back and disconnect the brush holder. Disconnect the 4 brushes, and remove the brush holder.

4. REMOVE ARMATURE FROM FIELD FRAME

5. REMOVE DRIVE LEVER AND STARTER CLUTCH WITH SHOCK ABSORBER FROM STARTER HOUSING

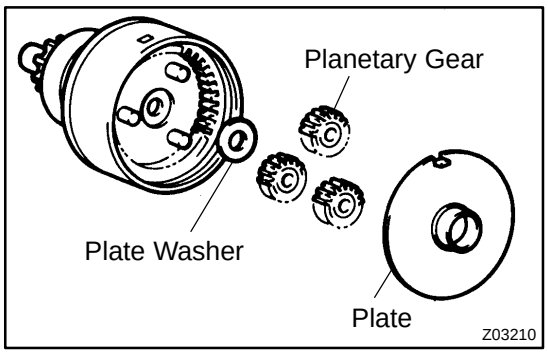

6. REMOVE PLANETARY GEARS

Remove the plate, 3 planetary gears and plate washer.

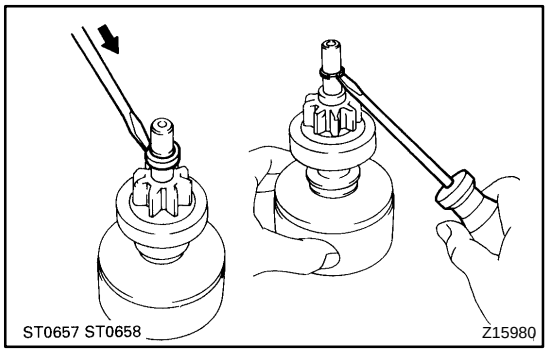

7. REMOVE STARTER CLUTCH

(a) Using a screwdriver, tap in the stop collar towards the starter clutch.
(b) Using a screwdriver, pry off the snap ring.
(c) Remove the stop collar and starter clutch from the planetary carrier shaft.

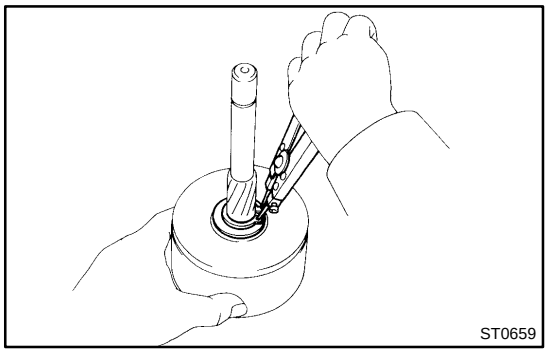

8. REMOVE PLANETARY CARRIER SHAFT AND INTERNALGEAR

(a) Using snap ring pliers, remove the snap ring and plate washer.
(b) Remove the planetary carrier shaft and plate washer.

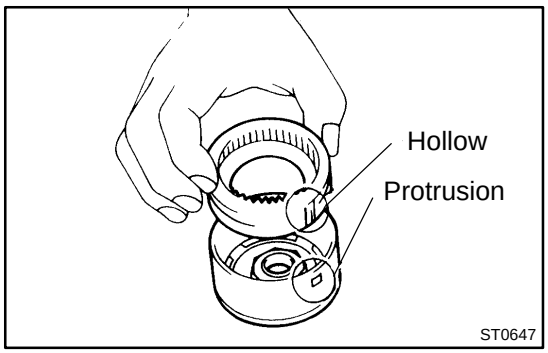

(c) Align the hollow of the internal gear with the protrusion inside the shock absorber, and remove the internal gear.

ST083-04

INSPECTION

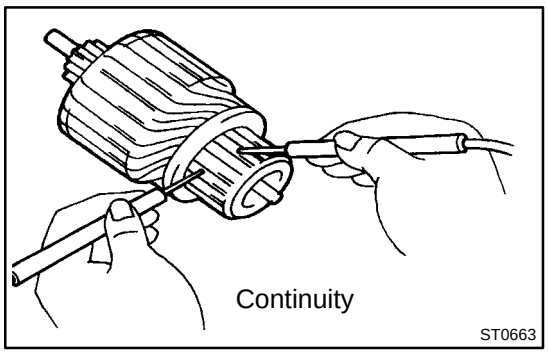

1. INSPECT ARMATURE COIL COMMUTATOR FOR OPEN CIRCUIT

Using an ohmmeter, check that there is continuity between the segments of the commutator.

If there is no continuity between any segment, replace the armature.

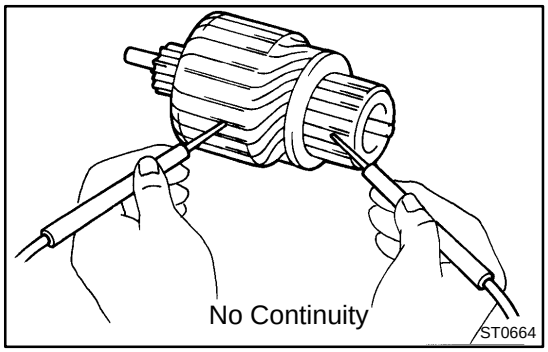

2. INSPECT ARMATURE COIL COMMUTATOR FOR GROUND

Using an ohmmeter, check that there is no continuity between the commutator and armature coil core.

If there is continuity, replace the armature.

3. INSPECT COMMUTATOR FOR DIRTY AND BURNT SURFACES

If the surface is dirty or burnt, correct with sandpaper (No. 400) or a lathe.

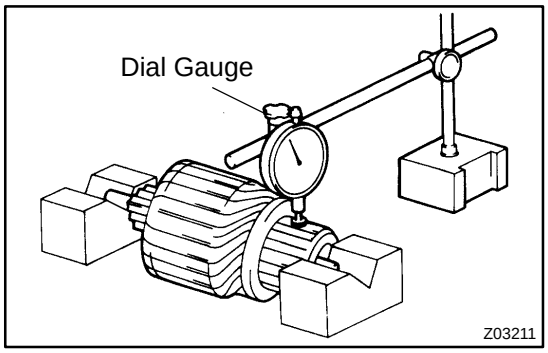

4. INSPECT COMMUTATOR CIRCLE RUNOUT

(a) Place the commutator on V-blocks.

(b) Using a dial gauge, measure the circle runout.

Maximum circle runout: 0.05 mm (0.0020 in.)

If the circle runout is greater than maximum, correct it on a lathe.

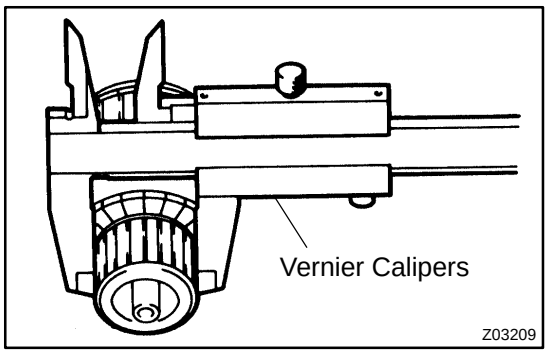

5. INSPECT COMMUTATOR DIAMETER

Using vernier calipers, measure the commutator diameter.

Standard diameter: 28.0 mm (1.102 in.)

Minimum diameter: 27.0 mm (1.063 in.)

If the diameter is less than minimum, replace the armature.

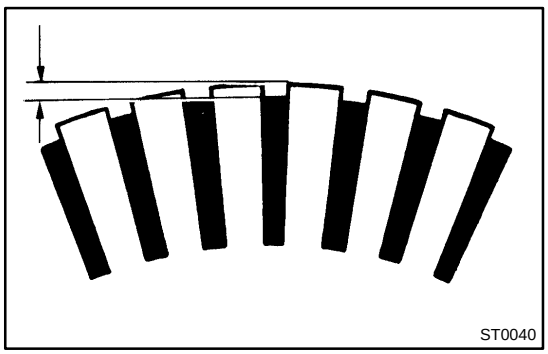

6. INSPECT COMMUTATOR UNDERCUT DEPTH

Check that the undercut depth is clean and free of foreign materials. Smooth out the edge.

Standard undercut depth: 0.6 mm (0.024 in.)

Minimum undercut depth: 0.2 mm (0.008 in.)

If the undercut depth is less than minimum, correct it with a hacksaw blade.

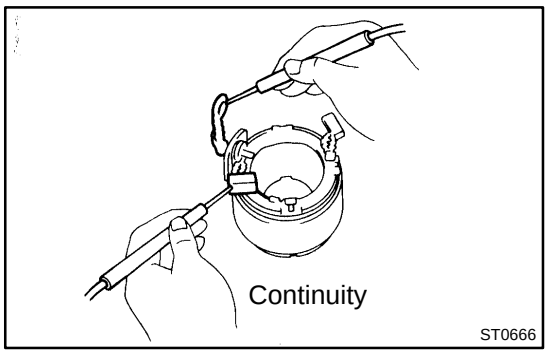

7. INSPECT FIELD FRAME (FIELD COIL) FOR OPEN CIRCUIT

Using an ohmmeter, check that there is continuity between the lead wire and field coil brush lead.

If there is no continuity, replace the field frame.

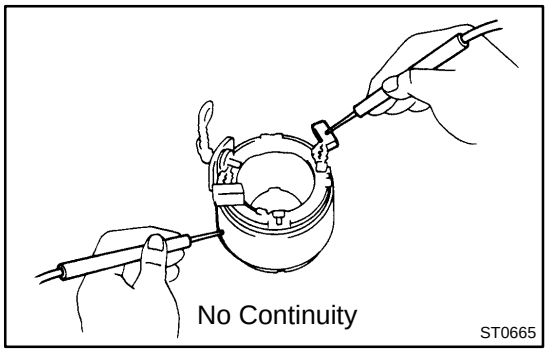

8. INSPECT FIELD FRAME (FIELD COIL) GROUND

Check the field coil for ground.

Using an ohmmeter, check that there is no continuity between the field coil end and field frame.

If there is continuity, repair or replace the field frame.

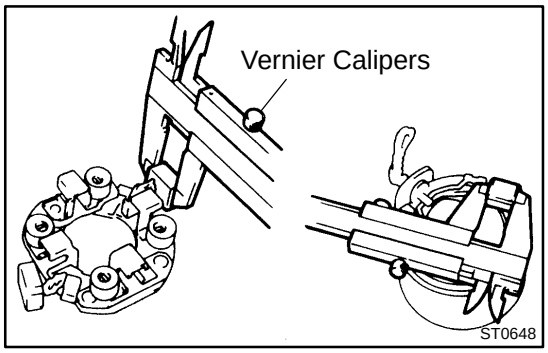

9. INSPECT BRUSH LENGTH

Using vernier calipers, measure the brush length.

Standard length: 14.0 mm (0.551 in.)

Minimum length: 9.0 mm (0.354 in.)

If the length is less than minimum, replace the brush (field frame side) or brush holder, and dress with an emery cloth.

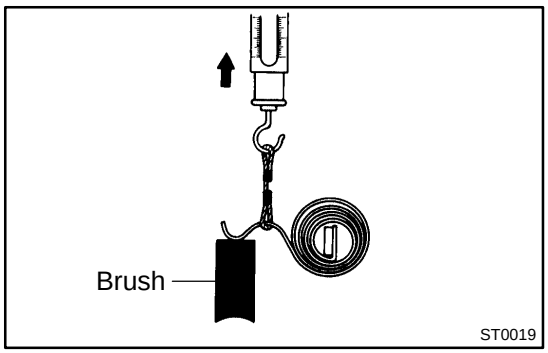

10. INSPECT BRUSH SPRINGS

Check the brush spring load.

Take the pull scale reading the instant the brush spring separates from the brush.

Spring installed load:

13.7 - 17.6 N (1.4 - 1.8 kgf, 3.1 - 4.0 lbf)

Minimum spring installed load:

8.8 N (0.9 kgf, 2.0 lbf)

If the installed load is not as specified, replace the brush springs.

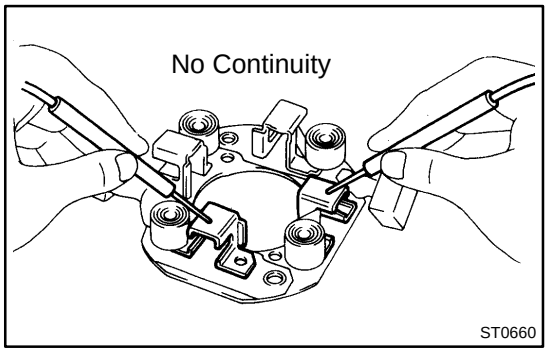

11. INSPECT BRUSH HOLDER

Check the brush holder insulation.

Using an ohmmeter, check that there is no continuity between the positive (+) and negative (-) brush holders.

If there is continuity, repair or replace the brush holder.

12. INSPECT CLUTCH AND GEAR

(a) Check the gear teeth on the planetary gear, internal gear and starter clutch for wear or damage.

If the gear is damaged, replace it.

If the starter clutch teeth are damaged, replace the starter clutch and also inspect the flywheel ring gear for wear or damage.

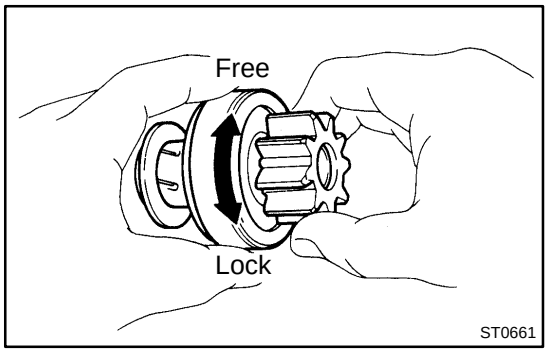

(b) Check the starter clutch.
Rotate the clutch pinion gear clockwise and check that it turns freely. Try to rotate the clutch pinion gear counterclockwise and check that it locks.

If necessary, replace the starter clutch.

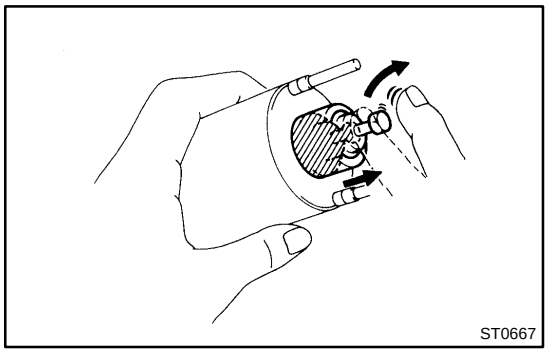

13. INSPECT MAGNETIC SWITCH

(a) Check the plunger.
Push in the plunger and release it. Check that it returns quickly to its original position.

If necessary, replace the magnetic switch.

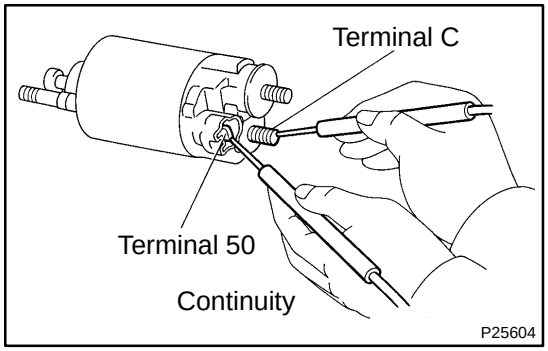

(b) Check the pull-in coil for open circuit.
Using an ohmmeter, check that there is continuity between terminals 50 and C.

If there is no continuity, replace the magnetic switch.

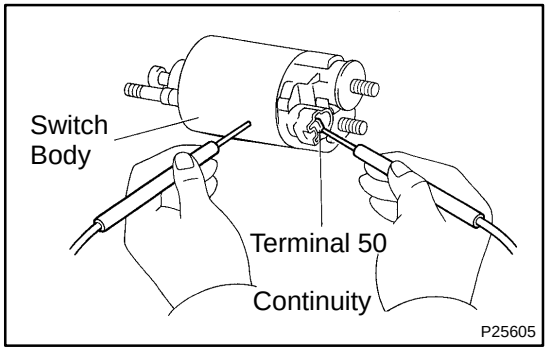

(c) Check the hold-in coil for open circuit.
Using an ohmmeter, check that there is continuity between terminal 50 and the switch body.

If there is no continuity, replace the magnetic switch.

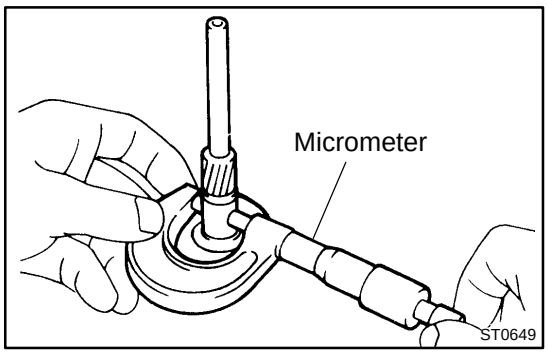

14. INSPECT BEARING

(a) Check the planetary carrier shaft.

Using a micrometer, measure the outer diameter of the surface in contact with the center bearing of the planetary carrier shaft.

Standard shaft diameter:
14.980 - 15.000 mm (0.5898 - 0.5906 in.)

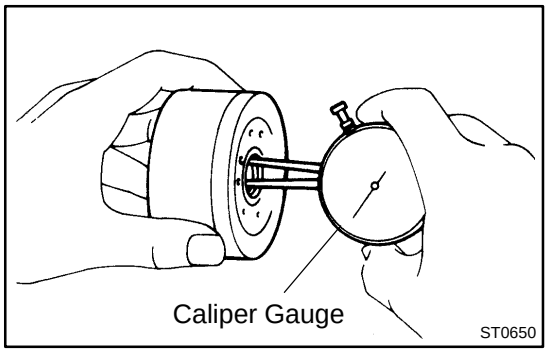

(b) Check the center bearing.

(1) Using a caliper gauge, measure the inside diameter of the center bearing.

Center bearing inside diameter:
15.008 - 15.050 mm (0.5908 - 0.5925 in.)

(2) Subtract the planetary carrier shaft diameter from the bearing inside diameter measurement.

Standard center bearing oil clearance:
0.01 - 0.06 mm (0.0004 - 0.0024 in.)
Maximum center bearing oil clearance:
0.2 mm (0.0078 in.)

If the clearance is greater than maximum, replace the planetary carrier shaft and center bearing.

ST0HV-01

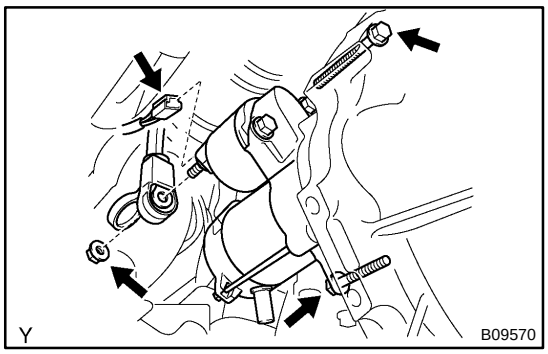

INSTALLATION

1. INSTALL STARTER

(a) Install the 2 bolts and starter.

(b) Connect the starter wire, and install the nut.

(c) Connect the starter connector.

2. INSTALL RH AND LH ENGINE UNDER COVER

ST0GS-02

REASSEMBLY

HINT:

Use high temperature-resistant grease to lubricate the bearings and sliding parts when assembling the starter.

1. INSTALL INTERNAL GEAR AND PLANETARY CARRIER SHAFT

(a) Apply grease to the internal gear touching the shock absorber and planetary gears.

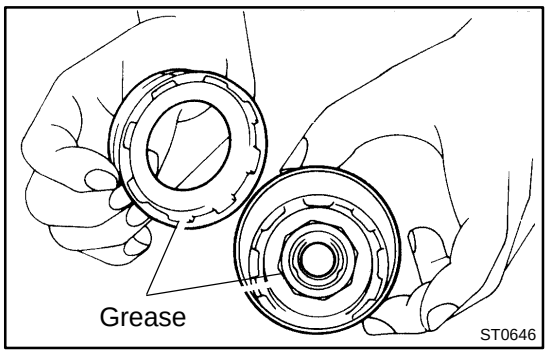

(b) Align the hollow of the internal gear with the protrusion inside the shock absorber.

(c) Insert and turn the internal gear so that it interlocks with the shock absorber.

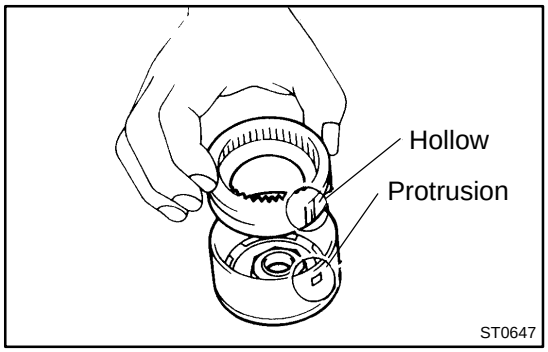

(d) Apply turbine oil to the center bearing.

(e) Apply grease to the plate washer, and install it to the planetary carrier shaft.

(f) Install the planetary carrier shaft to the shock absorber.

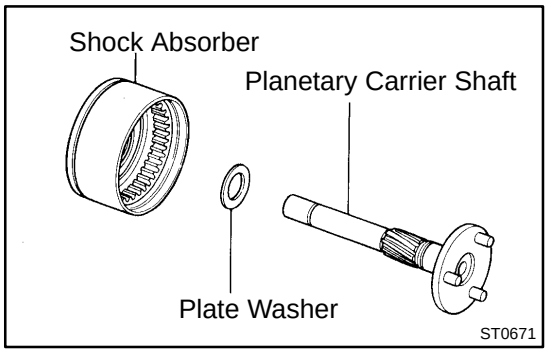

(g) Using snap ring pliers, install the plate washer and snap ring.

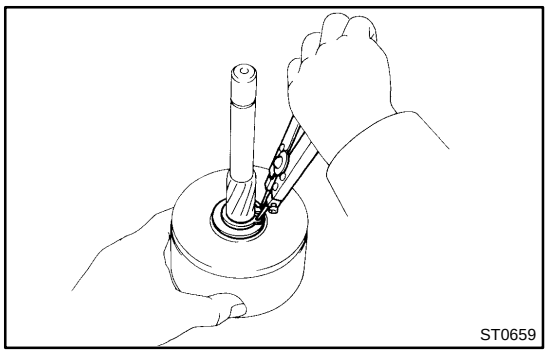

2. INSTALL STARTER CLUTCH

(a) Apply grease to the bushing and spline of the starter clutch stop collar.

(b) Place the starter clutch and stop collar on the planetary carrier shaft.

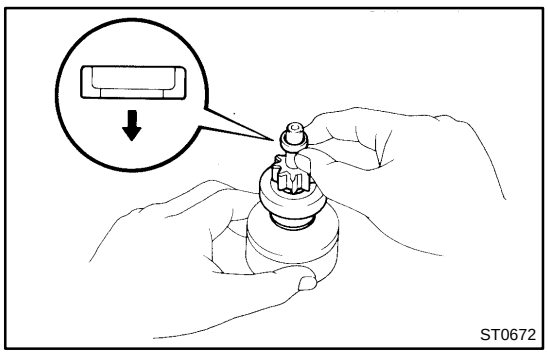

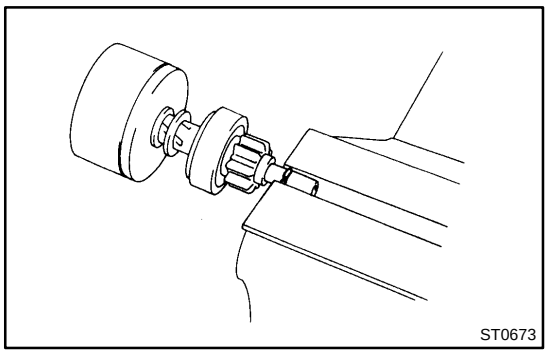

(c) Apply grease to the snap ring, and install it to the planetary carrier shaft groove.
(d) Using a vise, compress the snap ring.

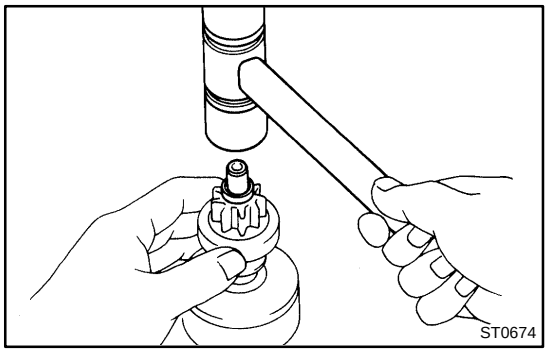

(e) Hold the starter clutch, tap the planetary carrier shaft and install the stop collar onto the snap ring with a plastic-faced hammer.

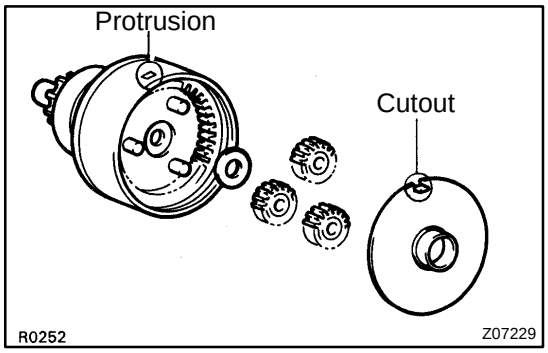

3. INSTALL PLANETARY GEARS
(a) Apply grease to the planetary gears and flange pin parts of the planet carrier shaft.
(b) Install the plate washer and 3 planetary gears.
(c) Align the cutout of the plate with the protrusion inside the shock absorber, and install the plate.

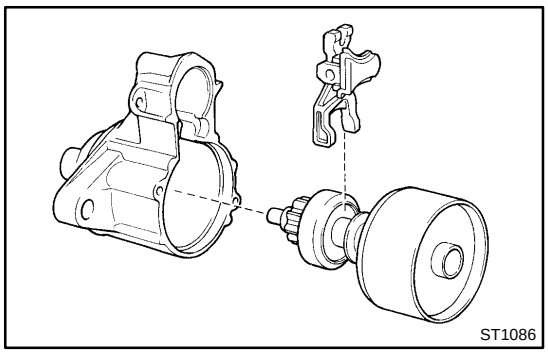

4. INSTALL DRIVE LEVER AND STARTER CLUTCH WITH SHOCK ABSORBER
(a) Apply grease to the drive lever touching the starter pivot part of the drive lever.
(b) Install the drive lever to the starter clutch.

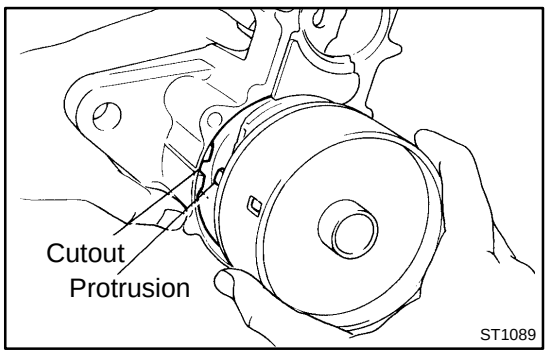

(c) Align the protrusion of the shock absorber with the cutout of the drive housing and install them.

5. PLACE ARMATURE INTO FIELD FRAME

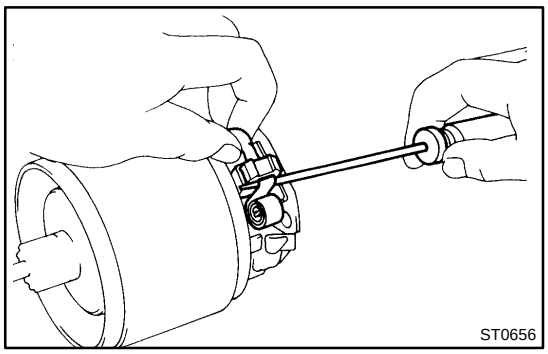

6. INSTALL BRUSH HOLDER

(a) Place the brush holder in position on the armature.

(b) Using a screwdriver, hold the brush spring back, and connect the brush into the brush holder. Connect the 4 brushes.

NOTICE:

Check that positive (+) lead wires are not grounded.

(c) Install a new O-ring to the groove of the field frame.

(d) Apply turbine oil to the bearing of the end cover.

(e) Install the end cover to the field frame with 2 screws.
Torque: 1.5 N·m (15 kgf·cm, 13 in.·lbf)

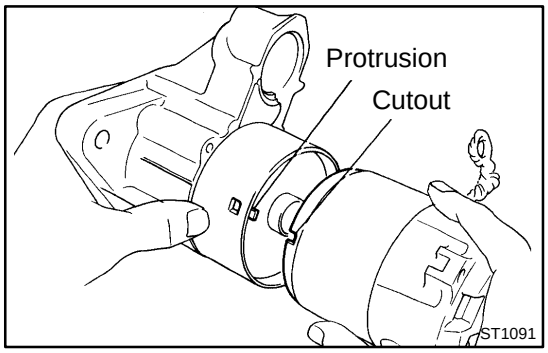

7. INSTALL FIELD FRAME AND ARMATURE ASSEMBLY

(a) Install a new O-ring to the groove of the field frame.

(b) Align the cutout of the field frame with the protrusion of the shock absorber.

(c) Install the field frame and armature assembly with the 2 through bolts.
Torque: 5.9 N·m (60 kgf·cm, 52 in.·lbf)

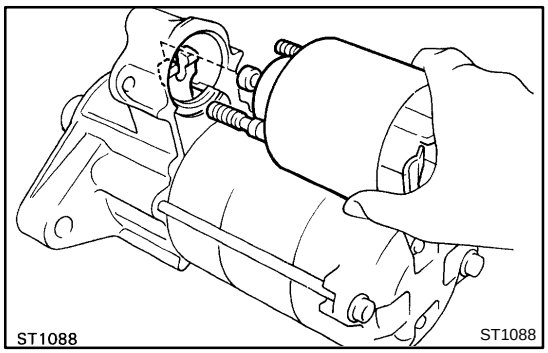

8. INSTALL MAGNETIC SWITCH

(a) Hang the plunger of the magnetic switch to the drive lever from the upper side.

(b) Install the magnetic switch with the 2 nuts.
Torque: 8.3 N·m (85 kgf·cm, 73 in.·lbf)

(c) Connect the lead wire to the terminal, and install the nut.
Torque: 9.8 N·m (100 kgf·cm, 87 in.·lbf)

ST0HU-01

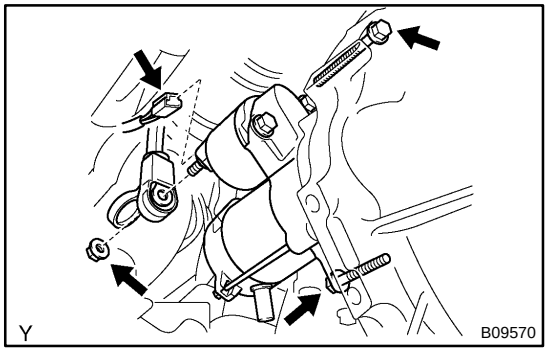

REMOVAL

1. REMOVE RH AND LH ENGINE UNDER COVER

2. REMOVE STARTER

(a) Disconnect the starter connector.

(b) Remove the nut, and disconnect the starter wire.

(c) Remove the 2 bolts and starter.

ST084-04

REPLACEMENT

1. REPLACE BRUSHES

HINT:

Only the 2 brushes of the positive (+) side (York side) are exchangeable, negative (-) side brush must be changed in the body with the brush holder.

(a) Cut the brush lead wire at the terminal side.

(b) Shave welded mark of the brush lead wire with sandpaper etc., and correct the terminal to the specified.

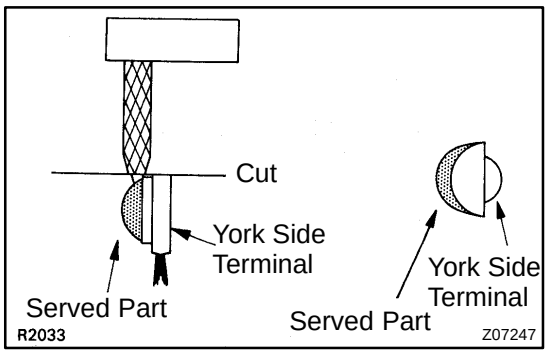

NOTICE:

Part to be shaved is so narrow that you should take care not to harm the field coil.

Specified width: 5.0 mm (0.197 in.)

Specified thickness: 1.6 mm (0.063 in.)

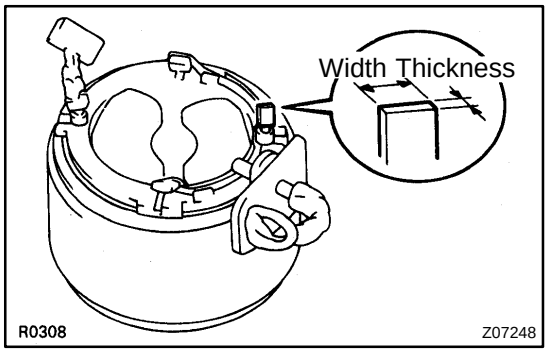

(c) Press the plate of the supply brush on the welded side of the terminal lead wire.

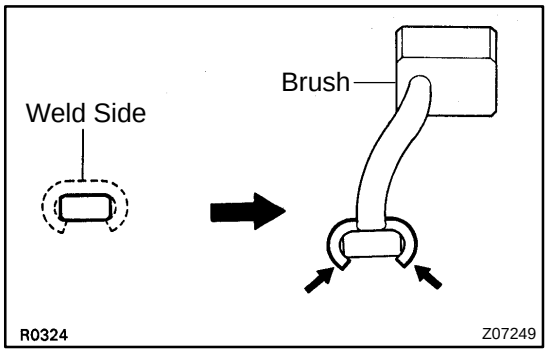

(d) Solder the pressed part, and shave to the specified measures with the sandpaper etc.

Specified width: 7.0 mm (0.276 in.)

Specified thickness: 3.3 mm (0.130 in.)

- Heat the soldered part well, and fiow the solder inside the plate, take care not to flow it into flow it into the inside lead wire.
- Take care not to flow the solder into field.

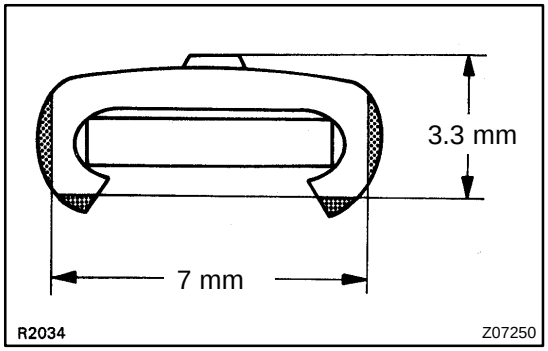

2. REPLACE CENTER BEARING

(a) Using SST and press, press out the center bearing.
SST 09221-25026 (09221-00090)

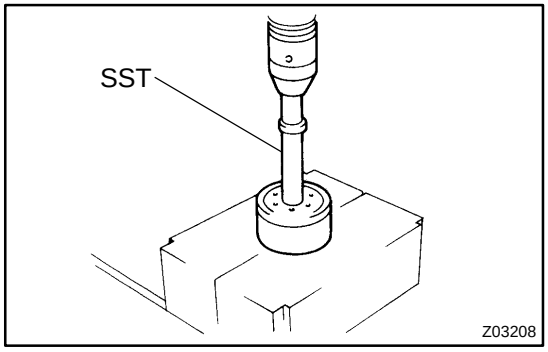

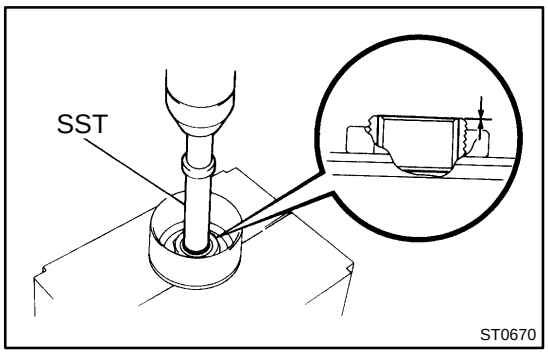

(b) Using SST and a press in a new center bearing to the position shown in the illustration.
SST 09221-25026 (09221-00090)

ST086-04

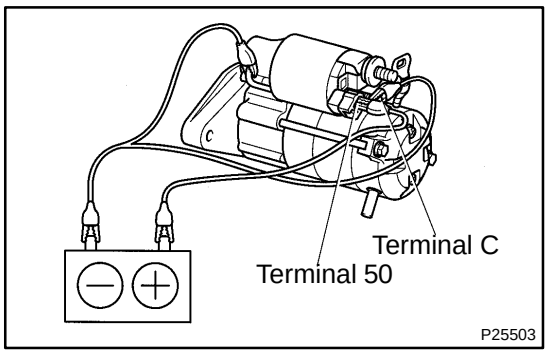

TEST

NOTICE:

These tests must be performed within 3 to 5 seconds to avoid burning out the coil.

1. DO PULL-IN TEST

(a) Disconnect the field coil lead from terminal C.

(b) Connect the battery to the magnetic switch as shown. Check that the clutch pinion gear moves outward.

If the clutch pinion gear does not move, replace the magnetic switch.

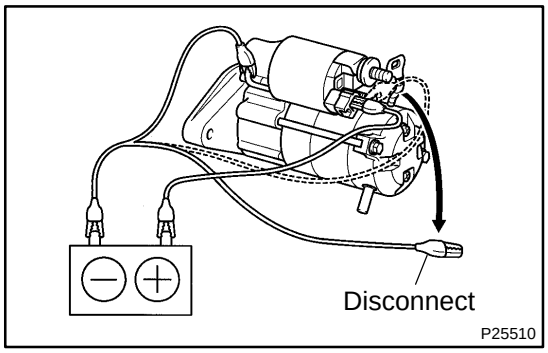

2. DO HOLD-IN TEST

While connected as above with the clutch pinion gear out, disconnect the negative (-) lead from terminal C. Check that the clutch pinion gear remains out.

If the clutch pinion gear returns inward, replace the magnetic switch.

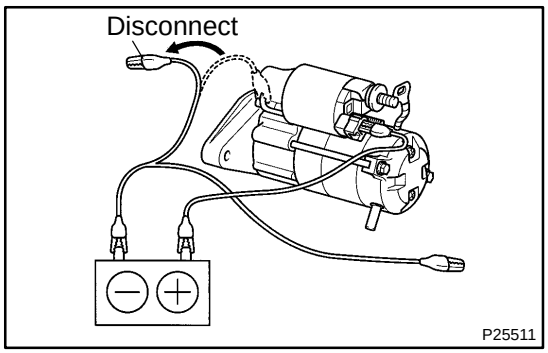

3. INSPECT CLUTCH PINION GEAR RETURN

Disconnect the negative (-) lead from the switch body. Check that the clutch pinion gear returns inward.

If the clutch pinion gear does not return, replace the magnetic switch.

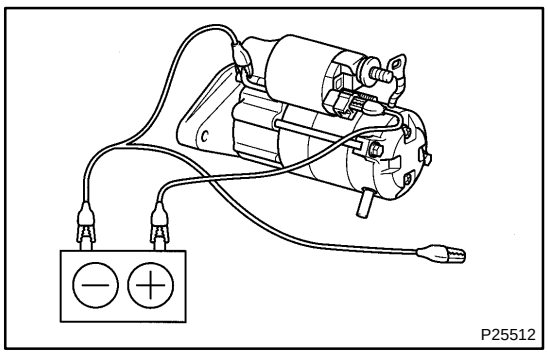

4. INSPECT CLUTCH PINION GEAR CLEARANCE

(a) Connect the battery to the magnetic switch as shown.

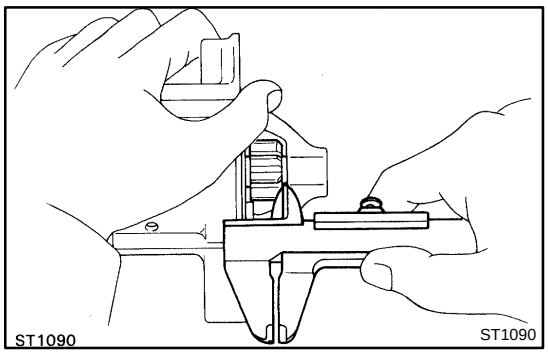

(b) Move the pinion gear toward the stop collar to remove slack and measure the clearance between the pinion gear end and starter housing.
Standard clearance: 1.0 - 5.0 mm (0.04 - 0.20 in.)

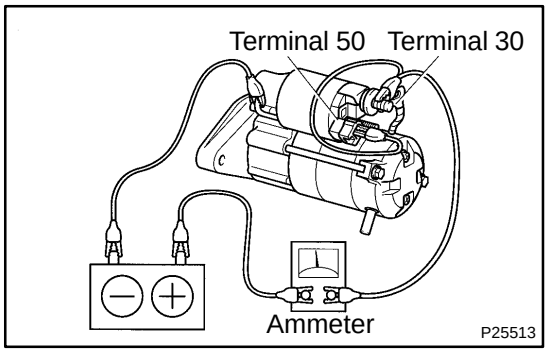

5. DO NO-LOAD PERFORMANCE TEST

(a) Connect the field coil lead wire to terminal C. Make sure the lead is not grounded.

(b) Connect the battery and ammeter to the starter as shown.

(c) Check that the starter rotates smoothly and steadily with the clutch pinion gear moving out. Check that the ammeter reads the specified current.
Specified current: 90 A or less at 11.5 V

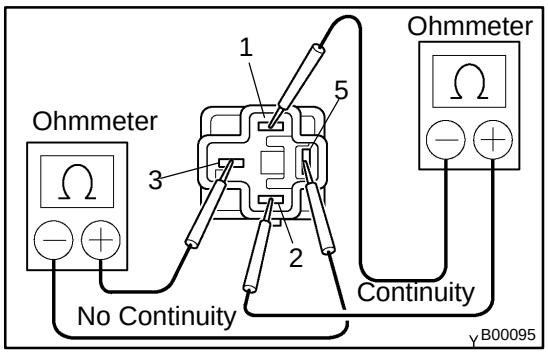

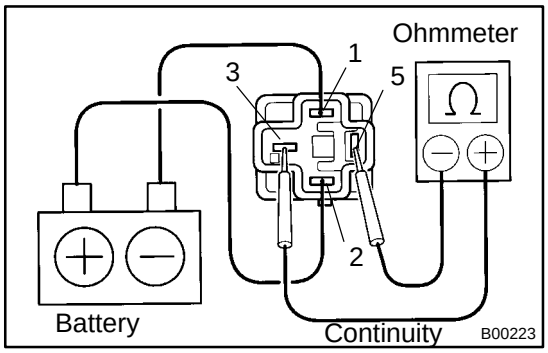

STARTER RELAY

ST02U-02

INSPECTION

1. REMOVE STARTER RELAY

2. INSPECT STARTER RELAY CONTINUITY

(a) Using an ohmmeter, check that there is continuity between terminals 1 and 2.

If there is no continuity, replace the relay.

(b) Check that there is no continuity between terminals 3 and 5.

If there is continuity, replace the relay.

3. INSPECT STARTER RELAY OPERATION

(a) Apply battery positive voltage across terminals 1 and 2.

(b) Using an ohmmeter, check that there is continuity between terminals 3 and 5.

If there is continuity, replace the relay.

4. REINSTALL STARTER RELAY

STARTING SYSTEM

ST02L-01

ON-VEHICLE INSPECTION

NOTICE:

Before changing the starter, check the following items again:

- **Connector connection**
- **Accessory installation, e.g.: theft deterrent system**